DECkit11-M assembly and installation manual

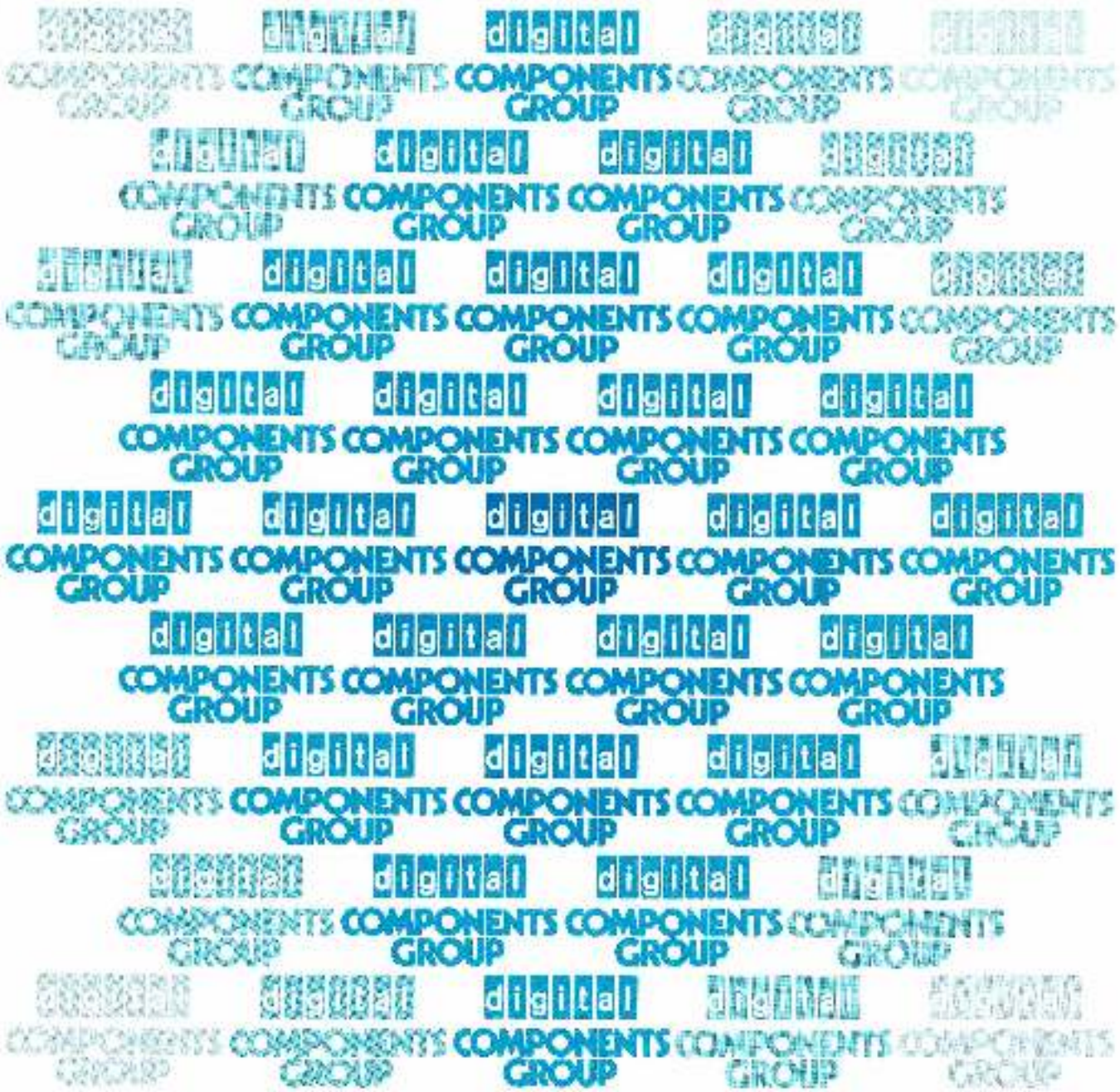

EK-K11M-IN-001

DECkit11-M assembly and installation manual

digital equipment corporation · marlborough, massachusetts

1st Edition, March 1975

Copyright © 1975 by Digital Equipment Corporation

The material in this manual is for informational purposes and is subject to change without notice.

Digital Equipment Corporation assumes no responsibility for any errors which may appear in this manual.

Printed in U.S.A.

The following are trademarks of Digital Equipment Corporation, Maynard, Massachusetts:

DEC	PDP
FLIP CHIP	FOCAL
DIGITAL	COMPUTER LAB
UNIBUS	

CONTENTS

		Page
CHAPTER 1	**INTRODUCTION**	
1.1	GENERAL	1-1
1.2	BASIC DATA TRANSFER	1-1
1.3	SPECIFICATIONS	1-2
1.4	RELATED LITERATURE	1-2
CHAPTER 2	**ASSEMBLY**	
2.1	GENERAL	2-1
2.2	UNPACKING DECkit11-M	2-1
2.3	VISUAL INSPECTION	2-1
2.4	TOOLS REQUIRED	2-1
2.5	DECkit11-M DEVICE ADDRESS SELECTION (M105)	2-1
2.6	DECkit11-M INTERRUPT VECTOR ADDRESS SELECTION (M7821)	2-2
2.7	UNIBUS REQUESTS (G7361)	2-2
2.8	MODULE M1621 JUMPER SELECTION	2-3
2.9	MODULE M1621 PULSE GENERATOR ADJUSTMENT	2-4
2.10	MODULE M1623 JUMPER SELECTION	2-4
2.11	MODULE M1623 PULSE GENERATOR ADJUSTMENT	2-4
2.12	MODULE INSTALLATION	2-4
2.13	DECkit11-M VARIATIONS	2-5
CHAPTER 3	**INSTALLATION**	
3.1	GENERAL	3-1
3.2	SYSTEM CONSIDERATIONS	3-1
3.2.1	Unibus Loading	3-1
3.2.2	Priority Requirements	3-1
3.2.3	Space Requirements	3-1
3.2.4	Power Requirements	3-1
3.3	CABLING	3-1
3.3.1	Unibus Cables	3-1
3.3.2	Power Cables	3-1
3.3.3	User I/O Cables	3-2
3.4	INSTALLATION	3-2
3.5	INITIAL TURN-ON	3-2
CHAPTER 4	**BASIC OPERATION**	
4.1	GENERAL	4-1
4.2	FUNCTIONAL DESCRIPTION (Figure 4-1)	4-1
4.2.1	User's Device to Unibus Data Transfer	4-2
4.2.2	Unibus to User's Device Data Transfers	4-2
4.3	INPUT/OUTPUT TIMING	4-3
APPENDIX A	**DECkit11-M PARTS LIST**	
APPENDIX B	**MODULE M1623 OUTPUT CONNECTOR PIN ASSIGNMENTS**	
APPENDIX C	**MODULE 1621 INPUT CONNECTOR PIN ASSIGNMENTS**	

ILLUSTRATIONS

Figure No.	Title	Page
1-1	Simplified System Block Diagram	1-1
2-1	DECkit11-M Device Address Select Format	2-1
2-2	DECkit11-M Interrupt Vector Address Select Format	2-2
2-3	G7361 Priority Jumper Plug Locations	2-3
2-4	M1621 Module Layout	2-3
2-5	M1623 Module Layout	2-5
2-6	DECkit11-M Slot Assignments Module Side	2-6
3-1	Installation of DECkit11-M System Unit Mounting Panel	3-3
3-2	Mounting Panel Pin Designation	3-3
4-1	DECkit11-M Block Diagram	4-1
4-2	Module M1623 CSR Bit Assignments	4-3

TABLES

Table No.	Title	Page
2-1	Device Address Selection Summary	2-2
2-2	Input-Only Interface	2-7
2-3	Output-Only Interface	2-7
2-4	Output-Only Interface (Relay)	2-7
A-1	DECkit11-M Parts List	A-1
B-1	M1623 Output Connector Pin Assignments	B-1
C-1	M1621 Input Connector Pin Assignments	C-1

CHAPTER 1
INTRODUCTION

1.1 GENERAL

DECkit11-M, designed and manufactured by Digital Equipment Corporation, is an instrument I/O interface capable of reading 34 bits of data from peripheral instrumentation into a PDP-11 processor, writing 24 bits of control data from a PDP-11 processor to peripheral instrumentation, and accommodating one Serial Peripheral Controller (SPC) option. Interrupt capability is supplied to inform the processor that input data should be read or that the peripheral instrument is ready to accept data.

The kit is intended for the PDP-11 system user who has the capability to assemble and install the DECkit into an existing system. DECkit11-M is designed to be compatible with TTL logic levels, uses simple I/O techniques, and has unidirectional I/O signals. Mechanically, DECkit11-M consists of a prewired system unit mounting panel and five M-series modules. The kit mounts in the PDP-11 processor, in an expansion mounting box or in any other suitable enclosure. Figure 1-1 is a simplified system block diagram of a PDP-11 utilizing the DECkit11-M interface.

1.2 BASIC DATA TRANSFER

Data transfers between the user's device and the PDP-11 processor occur when:

1. Data is read from the user's device to the PDP-11 for processing.
2. Control data is transferred to the user's device from the PDP-11 processor to control device operations.

Data transfers from the user's device to the processor are handled by an M1621 DVM data input interface module. This module contains input gates which select and transfer 34 bits of data from the user's device to the PDP-11 processor under program control.

The transfer of 24 bits of control data from the PDP-11 processor to the user's device is handled by an M1623 instrument remote control interface module. Control data bits are clocked into a 16-bit and an 8-bit storage register on this module under program control, and then transferred to the user's device. Additionally, the 24 bits of control data transferred to the user's device can be read back to the PDP-11 processor for error checking.

Data transfers between the PDP-11 processor and DECkit11-M take place over the Unibus on a master/slave basis using the standard Unibus handshake routine. Bus requests are made on priority level four.

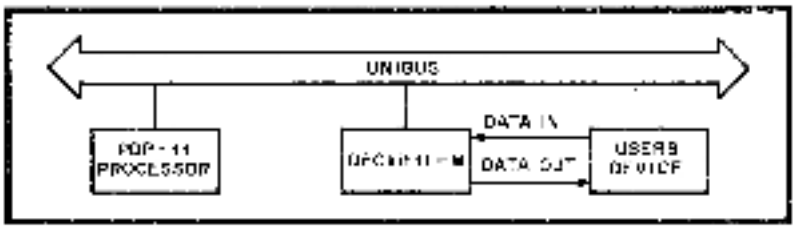

Figure 1-1 Simplified System Block Diagram

1.3 SPECIFICATIONS

The following specifications and particulars are for informational purposes only and are subject to change without notice.

Mechanical

Logic Panels

One, type H933-C (system unit)

Dimensions

10 in. h, 16-1/2 in. w, 2-1/4 in. d

(25.4 cm h, 41.9 cm w, 5.72 cm d)

Weight

4-1/2 lb (2.0 kg)

Interconnections

Unibus: M920* required when DECkit11-M mounts in a cabinet with other system units; BC11A-XX* of correct length required when DECkit11-M is the first unit in an expansion box.

Input/Output: Two required. BC05R-XX* or BC05Z-XX* are recommended.

Mounting Requirement

Space in existing PDP-11 processor or in an expansion mounting box.

Electrical

Logic Power Requirements

+5 V ± 5% @ 3.6 A nominal

Loading

Presents two Unibus loads

Logic

TTL

Module Types

M-series

Environmental

Temperature

Storage: −40° to 66° C

Operating: 5° to 50° C (ambient at module surface)

Relative Humidity

10% to 95% non-condensing

Operational

Transfer Mode

Program-controlled with program interrupts on priority level BR4

Data Transfer

Parallel 34-bit data words from user's device to DECkit11-M to PDP-11

Parallel 24-bit control words from PDP-11 to DECkit11-M to user's device.

1.4 RELATED LITERATURE

In addition to the documents associated with the PDP-11 processor in use and DECkit11-M Engineering Drawings, the *PDP-11 Peripherals Handbook* and the *Logic Handbook* contain information useful for installing, operating, and maintaining DECkit11-M.

*Not furnished with DECkit11-M.

CHAPTER 2
ASSEMBLY

2.1 GENERAL

Assembly consists of unpacking the DECkit from the shipping container, verifying that the kit is complete, selecting the appropriate DECkit device and interrupt vector addresses, and installing the modules into the prewired mounting panel.

2.2 UNPACKING DECkit11-M

Remove the KU components from the shipping carton and place them on a suitable work surface. Verify that the M-series modules are the same as those in the DECkit11-M Parts List (Appendix A). Parts missing from the DECkit should be reported to the nearest Digital Equipment Corporation Sales Office for replacement.

2.3 VISUAL INSPECTION

After checking the shipped DECkit components against the parts list, visually inspect the modules and prewired mounting panel for signs of physical damage, i.e., damaged modules (excluding address selection jumpers which may have been removed from modules during factory test), broken casting, or cracked mounting blocks on the prewired mounting panel. Inspect the mounting panel for bent or touching wire-wrap pins. Carefully straighten any bent pins. Contact the nearest Digital Equipment Corporation Sales Office for repair or replacement of damaged components.

2.4 TOOLS REQUIRED

The only tools required to carry out the assembly of the DECkit are a pair of diagonal cutters and possibly a low wattage soldering iron. Installation requires only a screwdriver.

2.5 DECkit11-M DEVICE ADDRESS SELECTION (M105)

DECkit11-M contains two M105 address selector modules which are used to decode the addresses for the M1621 DVM data input interface and the M1623 instrument remote control interface modules. The bus addresses of these interfaces are determined by the configuration of jumpers on the M105 address selector modules. Address selector module M105 in slot E01 controls the M1623 interface module in slot CDEF03. Interface module M1621 in slot CDEF04 is controlled by address selector M105 in slot F01. Each M105 module provides decoding for four addresses. The four addresses for each M105 module are sequential by even numbers.

Normal user addresses start at 764000_8 and progress upward. Using a pair of diagonal cutters, cut out the address selection jumpers on both M105 modules for bits to be decoded as "ONE" bits in the DECkit addresses. The address select format is shown in Figure 2-1, while Table 2-1 presents an address selection summary.

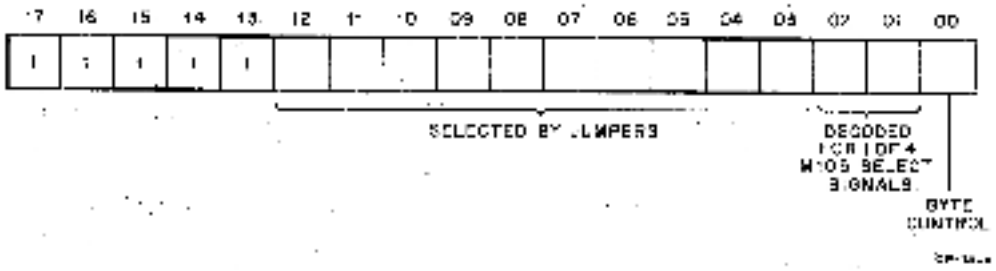

Figure 2-1 DECkit11-M Device Address Select Format

Table 2-1
Device Address Selection Summary

Address	Control	Function
7XXXX0	IN	Read in the Interrupt Enable (D06), Interrupt (D07), and Overload Status (D14) bits of the M1621 in slot CDEF04.
7XXXX0	OUT	Load INTR ENB flip-flop on the M1621 in slot CDEF04 from D06.
7XXXX2	IN	Read in 12 bits of data [D (11:00)] via M1621 in slot CDEF04.
7XXXX2	OUT	Initiate EXTERNAL TRIGGER pulse from the M1621 in slot CDEF04.
7XXXX4	IN	Read in 16 bits of data [D (15:00)] via M1621 in slot CDEF04.
7XXXX6	IN	Read in 6 bits of data [D (05:00)] via M1621 in slot CDEF04.
7YYYY0	OUT	Load INTR ENB flip-flop on the M1623 in slot CDEF03 from D06.
7YYYY0	IN	Read in the Interrupt Enable (D06), Interrupt (D07), and the three Status (D11, D13, and D14) bits of the M1623 in slot CDEF03.
7YYYY2	OUT	Write out 16 bits of data [D (15:00)] in the 16-bit register on M1623 in slot CDEF03.
7YYYY4	OUT	Write out 8 bits of data [D (07:00)] to the 8-bit registers on M1623 in slot CDEF03.
7YYYY6	OUT	Initiate the DATA STROBE pulse from the M1623 in slot CDEF03.

Notes: XXXX, M105 in slot F01
YYYY, M105 in slot E01
XXXX ≠ YYYY

2.6 DECkit11-M INTERRUPT VECTOR ADDRESS SELECTION (M7821)

DECkit11-M utilizes two interrupt vector addresses: one for the M1621 module (slot CDEF04) and one for the M1623 module (slot CDEF03). Both addresses are generated by the M7821 interrupt control module (slot B03) and are determined by address selection jumpers on this module. Jumpers on the M7821 module are to be cut out for address bits which are decoded as "ZERO" bits in the vector address.

Figure 2-2 illustrates the interrupt vector address select format. Vector addresses 170_8, 174_8, 270_8, and 274_8 are reserved for users. As an example, assume that the desired vector addresses for the M1621 and M1623 modules are 170_8 and 174_8 respectively. The first two octal digits (1 and 7) of the address are represented by bits 08 through 06 and are determined by jumpers selected by the user — jumper in for a binary one, jumper out for a binary zero. In this example, the jumpers would be removed from bits 08 and 07 and left in for bits 06 through 03. The third octal digit (0 or 4) is represented by bit 02 and is controlled by the M7821 module. Bits 00 and 01 are always zeros in the vector address.

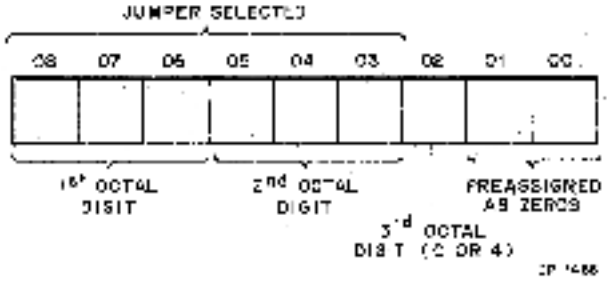

Figure 2-2 DECkit11-M Interrupt Vector Address Select Format

2.7 UNIBUS REQUESTS (G7361)

Both the M1621 and the M1623 modules generate an interrupt to the PDP-11 processor on priority level four. Although both modules interrupt on the same level, the M1623 module has a slightly higher priority than the M1621 module due to its electrical distance from the processor. Unibus requests are applied to the bus via the G7361 priority select module and its associated priority jumper plugs. Two no request and two level four request jumper plugs are supplied with DECkit11-M. The jumper plugs are installed on the G7361 module as indicated in Figure 2-3.

2.8 MODULE M1621 JUMPER SELECTION

The M1621 module contains a series of jumper leads which are soldered into pretinned holes on the board. These leads select signals and functions for specific system applications as determined by the user. Jumper designations are etched on the board surface between hole pairs. Figure 2-4 shows the location of the jumpers. Jumpers are used as follows:

Jumpers	Use
W1, W2, W3, W4, W13, W14	Selects either PDP-8/e or PDP-11 interface. W1, W3, and W13 must be in place, and W2, W4, and W14 must be removed for PDP-11 interfacing.
W5, W6	Selects one of two interrupt signals (INTR A or INTR B). With W5 in place and W6 removed, INTR A is selected. With W5 removed and W6 in place, INTR B is selected.
W7, W8	Selects one of two interrupt enable signals (INTR ENB A or INTR ENB B). With W7 in place and W8 removed, INTR ENB A is selected. With W7 removed and W8 in place, INTR ENB B is selected.
W9, W10	Select positive- or negative-going external trigger pulse. Positive pulse is selected with W10 in place and W9 removed. Negative-going pulse is selected with W9 in place and W10 removed.
W11, W12	Selects positive- or negative-going transition of PRINT COMMAND or EOC signal from user's instrument to clock the M1621 Interrupt flip-flop. With W11 removed and W12 in place, a negative-going transition clocks the Interrupt flip-flop. Positive-going transition clocks the flip-flop when W11 is in place and W12 is removed.

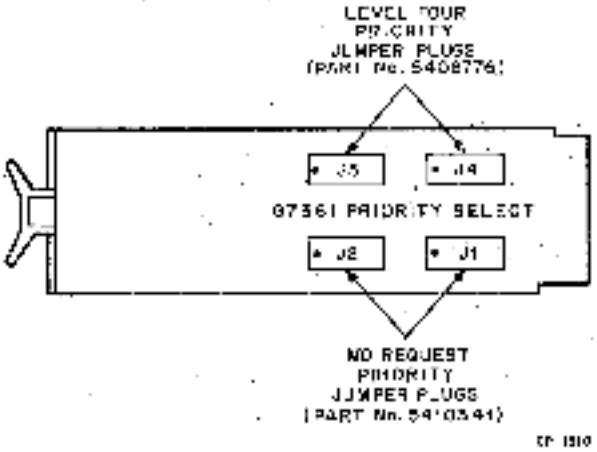

Figure 2-3 G7361 Priority Jumper Plug Locations

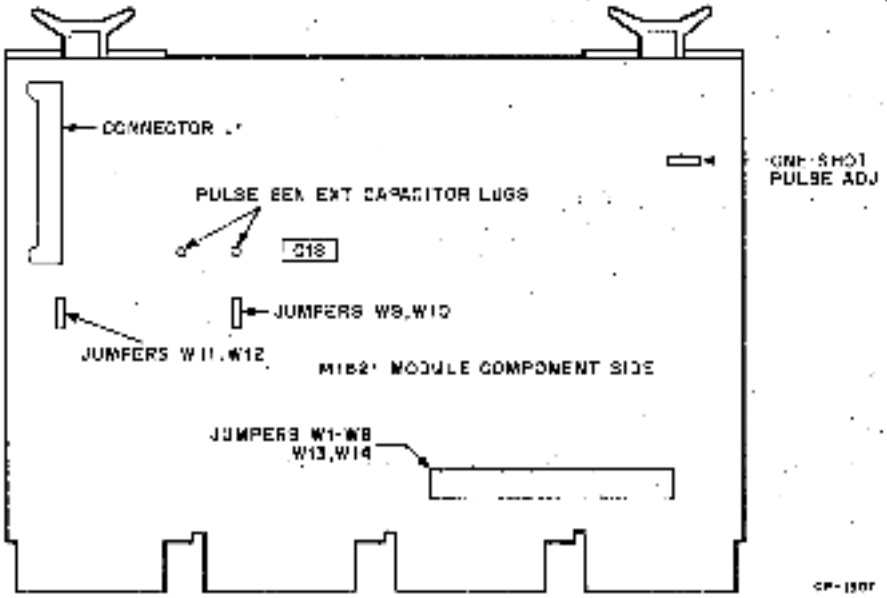

Figure 2-4 M1621 Module Layout

2.9 MODULE M1621 PULSE GENERATOR ADJUSTMENT

The M1621 module contains a one-shot pulse generator for triggering the user's device. Output pulse width is user-adjustable from 2 to 12 μs by a trimpot (Figure 2-4) on the module. Pulses longer than 12 μs can be obtained by adding a capacitor across the split lugs indicated in Figure 2-4. The value of the added capacitor is obtained from the following equation:

$$T_{pw} = 0.32RC$$

where: T_{pw} = selected pulse width in ns
R = resistance in kΩ (adjustable from 5.2 to 50 kΩ by trimpot)
C = required capacitance in μF

Pulses shorter than 2 μs can be obtained by removing the 1000 pF capacitor (C18) that is factory-installed on the M1621 module and replacing it with one of lower value. The value of the new capacitor is obtained from the following equation:

$$T_{pw} = 0.32RC\,[1+(0.7/R)]$$

where: T_{pw} = selected pulse width in ns
R = resistance in kΩ (adjustable from 5.2 to 50 kΩ by trimpot)
C = required capacitance in pF

2.10 MODULE M1623 JUMPER SELECTION

The M1623 module contains a series of jumper leads which are soldered into prefitted holes on the board. These leads select signals and functions for specific system applications as determined by the user. Jumper designations are etched on the board surface between hole pairs. Figure 2-5 shows the location of the jumpers. Jumpers are used as follows:

Jumpers	Use
W1, W2, W3, W4, W5, W6, W7, W8, W9, W10	Selects either PDP-8/e or PDP-11 interface. W1, W4, W5, W7, and W10 must be in place, and W2, W3, W6, W8, and W9 must be removed for PDP-11 interfacing.
W11, W12	Selects register preset during power-up. With W11 in place and W12 removed, all M1623 registers will *clear* on power-up. M1623 registers will be *set* on power-up with W11 removed and W12 in place.
W13, W14	Selects a positive or negative output pulse from the M1623 pulse generator. With W13 removed and W14 in place, a negative pulse is selected. With W13 in place and W14 removed, a positive pulse is selected.
W15, W16	Selects one of two interrupt signals (INTR A or INTR B). With W15 removed and W16 in place, INTR B is selected. With W15 in place and W16 removed, INTR A is selected.
W17, W18	Selects one of two interrupt enable signals (INTR ENB A or INTR ENB B). With W17 in place and W18 removed, INTR ENB A is selected. With W17 removed and W18 in place, INTR ENB B is selected.
W19, W20	Selects positive- or negative-going transition of the READY signal from the user's device to clock the Interrupt flip-flop on the M1623 module. With W19 in place and W20 removed, a positive-going transition clocks the Interrupt flip-flop. Negative-going transition clocks the flip-flop when W19 is removed and W20 is in place.

2.11 MODULE M1623 PULSE GENERATOR ADJUSTMENT

The M1623 module contains a one-shot pulse generator for triggering the user's device. Output pulse width is user-adjustable from 2 to 12 μs by a trimpot (Figure 2-5) on the module. Pulses longer than 12 μs can be obtained by adding capacitance across the split lug terminals (Figure 2-5) on the module board. Conversely, pulses shorter than 2 μs can be obtained by removing the 1000 pF capacitor (C38) that is factory-installed on the M1623 module and replacing it with one of lower value. The value of the new capacitors can be determined from the equations in Paragraph 2.9.

2.12 MODULE INSTALLATION

Module installation involves the insertion of the six DECkit modules into the proper slots on the prewired mounting panel.

CAUTION

To ensure proper module installation, insert the modules so that the deep notch on each module seats against the connector block rib.

Figure 2-6 shows the DECkit slot assignments from the module side. Install the modules into the specified slots, paying particular attention that modules M105 installed in slots E01 and F01 are the proper modules for these slots as determined by the module address selection jumpers (Paragraph 2.5). After installation, secure the modules with the H852 and H853 module holders. Fasten one H853 module holder between module locations E and F and fasten the other H853 between locations C and D. The H852 module holder is fastened between locations B and C. Slots AB01 and AB04 are the Unibus input/output slots. The use of these slots varies with the type of installation and is discussed in Paragraph 3.3.1. Slots ABCDEF02 and D01 are not used by DECkit11-M, but are provided to accommodate an additional I/O module (M1621, M1623, M1801, or a Small Peripheral Controller) as determined by the user. Paragraph 2.13 discusses DECkit11-M variations.

2.13 DECkit11-M VARIATIONS

Prewired system mounting panel BB11-M provides space for mounting additional I/O modules (M1801, M1621, or M1623) or Small Peripheral Controllers to produce a custom variation of DECkit11-M to suit an individual user's requirements. Individual modules may be ordered from the nearest Digital Equipment Corporation Sales Office.

Rather than using the I/O modules specified in Figure 2-6 for slots C02—F02, C03—F03, and C04—F04, the user may install M1621, M1623, M1801 (16-bit relay output interface, or Small Peripheral Controller modules (module type specified by user) into all three locations, or in any combination up to a maximum of three modules.

When three M1621 modules are used, the DECkit becomes an input-only interface. That is, data can only be transferred from the user's device to the kit, then to the PDP 11 processor. Three M1621 modules can accommodate up to 102 input data bits.

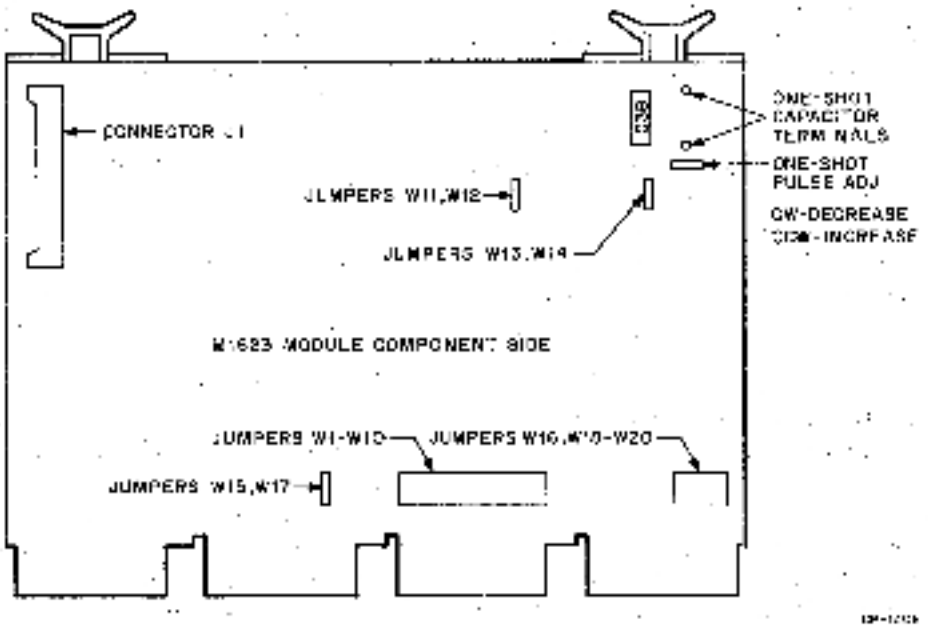

Figure 2-5 M1623 Module Layout

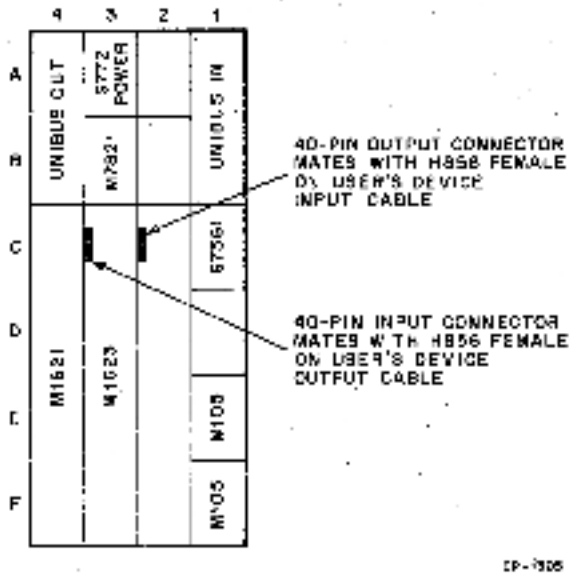

Figure 2-6 DECkit11-M Slot Assignments — Module Side

On the other hand, when three M1623 modules are installed in slots C02–F02, C03–F03, and C04–F04, the DECkit becomes an output-only interface. That is, data can only be transferred from the PDP-11 processor to the user's device. Three M1623 modules can accommodate up to 72 output data bits.

The M1801 16-bit relay output interface module may also be installed in slots C02–F02, C03–F03, and C04–F04. When the kit is configured with three M1801 modules, up to 48 output data bits can be transferred from the PDP-11 processor to the user's device. Again, the kit becomes an output-only interface.

Finally, three Small Peripheral Controllers may be installed in slots C02–F02, C03–F03, and C04–F04. The type of Small Peripheral Controller used depends on the user's requirements.

Any combination of the aforementioned modules may be installed into the BB11-M mounting panel. However, when only one I/O module is installed it must occupy slots C02–F02. When two I/O modules or two Small Peripheral Controllers are used, they must occupy slots C03–F03 and C04–F04.

An additional M7821 interrupt control module (with the proper address) must be installed into slot B02 to service the interrupt requests for I/O modules placed in slots C02–F02. The interrupt vector address produced by the B02 module ends in zero (i.e., vector address 170_8). Slot B03 contains an M7821 module which services interrupt requests for I/O modules in slots C03–F03 and C04–F04. Modules in slots C03–F03 are serviced by a vector address that ends in zero (i.e., vector address 170_8), while the vector address for modules in slots C04–F04 ends in four (i.e., vector address 174_8).

Regardless of the I/O module configuration of the DECkit, the G7361 priority select module (Figure 2-3) must be installed in slot C01. The use of the sockets on the G7361 module varies with the type of modules installed in the C02–F02, C03–F03, and C04–F04 slots. Socket J1 is used to select interrupt priority lines for an I/O module in slots C02–F02. Socket J3 selects interrupt priority lines for C03–F03, and socket J4 selects priority lines for C04–F04. Sockets J1, J3, and J4 must contain priority jumper plugs for priority levels four, five, six, or seven as determined by the user. Since socket J2 is not servicing an I/O module, a no request priority jumper plug must be installed into J2. When a Small Peripheral Controller occupies slots C02–F02, socket J1 must contain a no request priority jumper plug and socket J2 must contain a priority jumper plug for priority level four, five, six, or seven as determined by the user. DECkit11-M is supplied with two level four and two no request priority jumper plugs. Additional priority jumper plugs may be ordered from the nearest Digital Equipment Corporation Sales Office.

Tables 2-2 through 2-4 list the modules required (Yes) and not required (No) for various BB11-M mounting panel interface configurations. The use of DECkit11-M variations outlined in this manual is strictly a user's option. Additional modules and priority jumper plugs required to implement a user's option must be purchased from Digital Equipment Corporation.

Table 2-2
Input-Only Interface

No. of Input Bits	M1621			M105			G7361
	C02–F02	C03–F03	C04–F04	D01	E01	F01	C01
34	Yes	No	No	Yes	No	No	Yes
68	No	Yes	Yes	No	Yes	Yes	Yes
102	Yes	Yes	Yes	Yes	Yes	Yes	Yes

Table 2-3
Output-Only Interface

No. of Output Bits	M1623			M105			G7361
	C02–F02	C03–F03	C04–F04	D01	E01	F01	C01
24	Yes	No	No	Yes	No	No	Yes
48	No	Yes	Yes	No	Yes	Yes	Yes
72	Yes	Yes	Yes	Yes	Yes	Yes	Yes

Table 2-4
Output-Only Interface (Relay)

No. of Output Bits	M1801			M105			G7361
	C02–F02	C03–F03	C04–F04	D01	E01	F01	C01
16	Yes	No	No	Yes	No	No	Yes
32	No	Yes	Yes	No	Yes	Yes	Yes
48	Yes	Yes	Yes	Yes	Yes	Yes	Yes

CHAPTER 3
INSTALLATION

3.1 GENERAL

Installation of DECkit11-M consists of securing the unwired mounting panel, with the previously installed modules, into an existing PDP-11 processor or into an added expansion mounting box and then connecting the Unibus, power, and I/O cables to the kit.

3.2 SYSTEM CONSIDERATIONS

Before installing DECkit11-M, consideration must be given to Unibus loading, priority requirements, space requirements, and power requirements.

3.2.1 Unibus Loading

DECkit11-M presents two bus loads to the Unibus in the kit's normal configuration. Twenty bus loads can be handled by the standard PDP-11 Unibus before a bus repeater is required. Therefore, the user must determine the Unibus load when installing DECkit11-M and the possible need for bus repeater DB11-A for handling additional bus loads. The bus repeater is not supplied with the DECkit but can be ordered from the nearest Digital Equipment Corporation Sales Office.

3.2.2 Priority Requirements

DECkit11-M makes bus requests on priority level four (BR4). Since the user may connect the kit to the bus along with other devices which use the BR4 level, the user must bear in mind that when more than one device is connected to the same request line, the device electrically nearest the PDP-11 processor has the highest priority.

3.2.3 Space Requirements

DECkit11-M consists of one BB11 system unit mounting panel. The kit may be mounted either in an existing PDP-11 processor, an existing expansion mounting box, in an added expansion mounting box, or in any other suitable enclosure which provides proper cooling and protection.

3.2.4 Power Requirements

DECkit11-M requires +5 Vdc at 3.8 A in the kit's normal configuration. When the DECkit is mounted in an existing PDP-11 processor or in an existing expansion mounting box, power is provided by the existing +5 Vdc power supply. Any power supply capable of meeting the voltage, current, regulation, and ripple requirements of a Digital Equipment Corporation H720 power supply may be used to power DECkit11-M if the kit is not installed in a PDP-11 or a mounting box.

3.3 CABLING

DECkit11-M requires connections to the PDP-11 Unibus, to the user's I/O device, and to the logic +5 Vdc power source. Unibus, I/O, and power cables for use with the DECkit may be ordered from Digital Equipment Corporation.

3.3.1 Unibus Cables

Installation of DECkit11-M into a cabinet containing other system units requires an M920 Unibus connector module. The M920 module plugs into slot AB04 of the existing system unit and into slot AB01 of DECkit11-M (Figure 2-6). When the DECkit is installed as the first system unit in an expansion box, a BC11A-XX* cable of correct length is required to connect between slot AB04 of the last system unit in the cabinet or previous extension box and slot AB01 of the DECkit. Neither the M920 module nor the BC11A-XX* cable is supplied with DECkit11-M. An M930 terminator module must be installed in slot AB04 of the DECkit (Figure 2-6) when DECkit11-M is the last device on the Unibus. The M930 module becomes available when the Unibus is extended from the previous system unit.

3.3.2 Power Cables

There are three power cables available for use in connecting DECkit11-M to PDP-11 systems. Early PDP-11 processors (PDP-11/15, PDP-11/20) and expansion mounting boxes have wire harnesses with G772 connectors for all system unit mounting locations. Later PDP-11 processors (PDP-11/30, PDP-11/40, and PDP-11/45) have wire harnesses with a Mate-N-Lok power connector for all system unit mounting locations. Wire harnesses are furnished only as needed. When installing DECkit11-M into one of the later systems, one of the following harness assemblies is required.

*XX = cable length in feet

1. For PDP-11/45 systems having serial numbers below 2000 and using 8-pin Mate-N-Lok to G772 connectors:

Cable No.	Length
70088855-1J	20 in.
70088855-2B	26 in.

2. For PDP-11/40 systems having serial numbers below 6000; PDP-11/35 systems (21 in. high processor cabinet) having serial numbers below 6000; H960-D and H960-E cabinet configurations having serial numbers below 7000; all PDP-11/E05, PDP-11/E10 systems; and PDP-11/35s (10-1/2 in. high processor cabinet); all using 9-pin Mate-N-Lok to G772 connectors:

Cable No.	Length
70088909-11	11 in.
70088909-17	17 in.

3. For PDP-11/45 systems having serial numbers 2000 and above; PDP-11/40 systems with serial numbers 6000 and above; PDP-11/35 systems (21 in. high processor cabinet) with serial numbers 6000 and above; and H960 and H960-E cabinet configurations having serial numbers 7000 and above; all using 15-pin and 6-pin Mate-N-Lok to G772 connectors:

Cable No.	Length
70095562	18 in.

Alternatively, a G772 connector can be installed on a suitable cable for use with any +5 Vdc power supply meeting the current and regulation requirements of DECkit11-M, or +5 Vdc power can be directly connected to wire-wrap pins for +5 V and ground on slot A03 shown on BB11-M-2 in the KIT11-M Engineering Drawings.

3.3.3 User I/O Cables

Two cable assemblies are required for interfacing DECkit11-M (normal configuration) to the user's I/O device. Input signals to the DECkit are applied through a 40-pin male connector mounted on the M1621 module in slots C04 - F04 (Figure 2-6), while output signals from the DECkit are brought to a 40-pin male connector on the M1623 module in slots C03 - F03 (Figure 2-6). The 40-pin connectors on the modules mate with H856 40-pin cable terminators. It is recommended that cable assemblies from the following list be used to interface the DECkit with the user's I/O device. Cable selection is determined by the type of connections used on the I/O device. The desired cable length (XX) must be specified when ordering.

Cable No.	Connectors	Type	Standard Lengths (ft)
BC07D-XX	H856 to open end	Two, 20-conductor ribbon	10, 15, 25
BC08R-XX	H856 to H856	Shielded flat	1, 6, 10, 12, 20, 25, 50, 75, 100
BC04Z-XX	H856 to open end	Shielded flat	6, 10, 15, 25, 50

3.4 INSTALLATION

The installation procedure presented below details the installation of DECkit11-M in a PDP-11 processor or an expansion mounting box. The installation procedure is as follows:

1. Mount the DECkit (with modules previously installed) into the vacant system unit location and secure with the two special knurled screws supplied with the kit (Figure 3-1).

2. Plug the Unibus cable or an M920 Unibus connector module (whichever applies) into slot AB01 (Figure 2-6) of the DECkit.

3. Plug an M930 terminator in DECkit slot AB04 if the kit is the last device on the Unibus; if not the last device, install an M920 connector module or BC11A cable in slot AB04.

4. Plug the G772 power connector into DECkit slot A03.

5. Connect the user's I/O device input and output cables to the 40-pin connectors on the M1621 and M1623 modules (Figure 2-6).

6. Examine the interconnecting cables for pinched wires or loose connections.

3.5 INITIAL TURN-ON

After completing the installation procedure, turn on the PDP-11 system power and check for the presence of +5 Vdc and −15 Vdc at the DECkit mounting panel. (Refer to KIT11-M Engineering Drawings and Figure 3-2.) Verify that the proper M105 module addresses have been selected (Paragraph 2.5) by using the PDP-11 console switch registers and indicators.

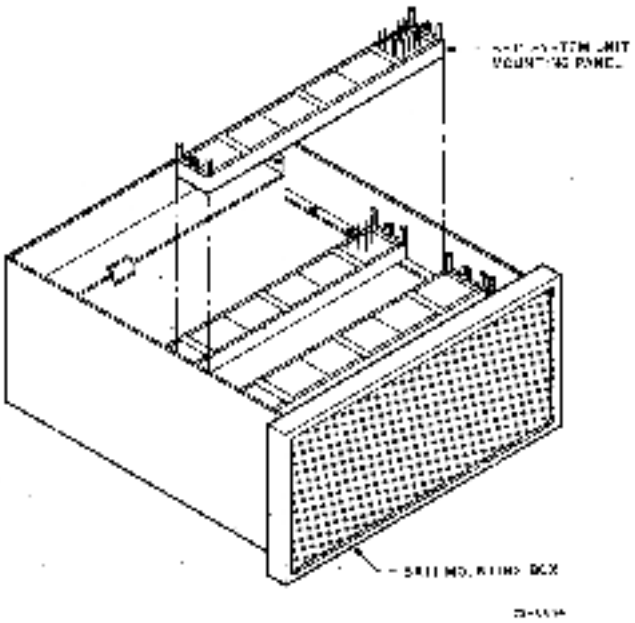

Figure 3-1 Installation of DECkit11-M System Unit Mounting Panel

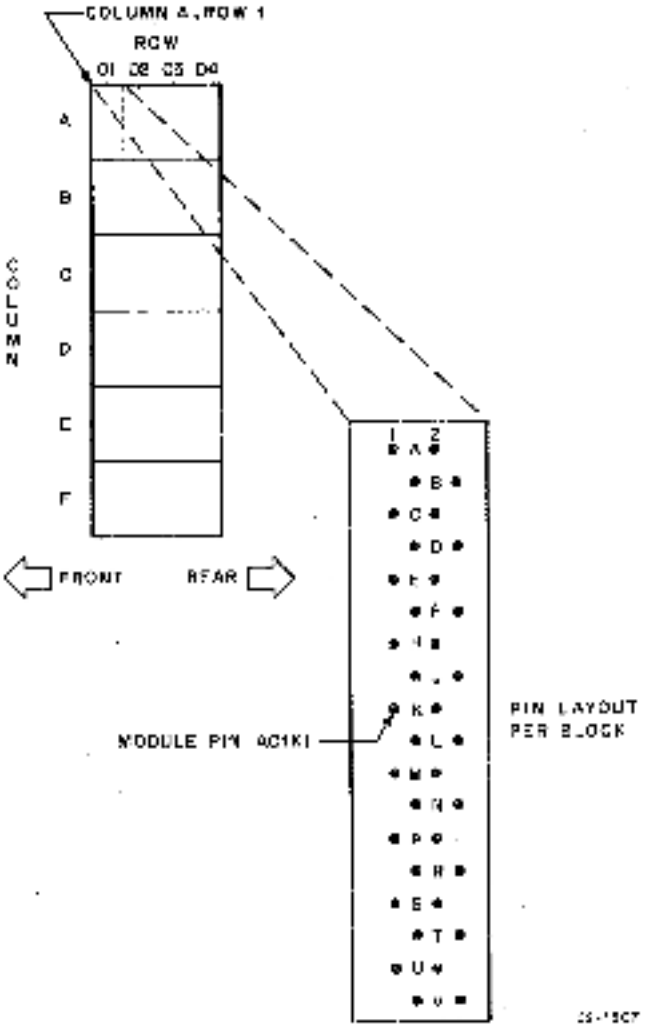

Figure 3-2 Mounting Panel Pin Designation

CHAPTER 4
BASIC OPERATION

4.1 GENERAL

This section contains a general functional description of DECkit11-M operations pertaining to the normally configured kit. Figure 4-1 is a block diagram of DECkit11-M. Operation of DECkit11-M consists of transferring 34 data bits from the user's device to the Unibus through the DECkit, and transferring 24 control bits from the Unibus to the user's device through the DECkit. Brief descriptions of the DECkit timing associated with the input/output transfers are also presented.

4.2 FUNCTIONAL DESCRIPTION (Figure 4-1)

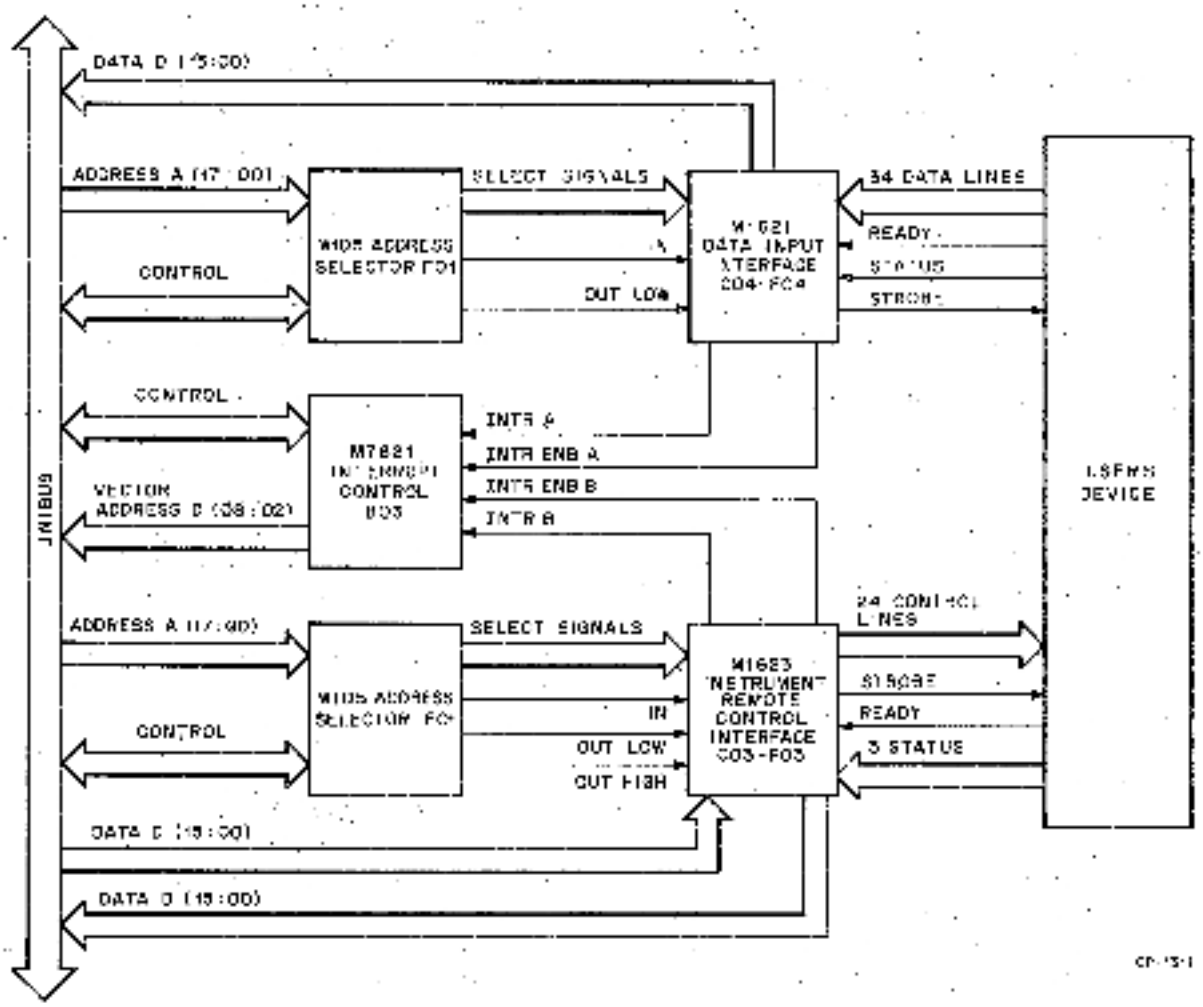

Figure 4-1 DECkit11-M Block Diagram

4.2.1 User's Device to Unibus Data Transfer

Data transfers from the user's device to the Unibus can be program-controlled or interrupt-controlled. Three Data In (DATI) bus transactions are required to transfer the 34 bits of data from the user's device to the Unibus. Bits D00 through D11 (12 bits) are transferred during the first DATI. The second DATI transfers bits D00 through D15 (16 bits), and the third DATI transfers bits D00 through D05 (6 bits). Transfers are started when the user's device places 34 bits of data on the DATA LINES to the M1621 module (slot C04—F04) and the user's software program instructs the PDP-11 processor to "read" the data. The processor performs the first of three program-controlled DATI transfers by placing Unibus CONTROL and the appropriate M1621 module ADDRESS [A (17:00)] on the Unibus. Address selector module M105 (slot F01) receives the ADDRESS and CONTROL. The address is decoded into one of three SELECT SIGNALS, which is applied to the M1621 module along with the IN signal. At the M1621 module, the SELECT SIGNAL (SEL 6 in this case) and the IN signal gate 12 bits of data [DATA D (12:00)] through M1621 to the Unibus. The next read instruction starts the second DATI. A new ADDRESS is presented to the M105 module (slot F01), resulting in a second SELECT SIGNAL (SEL 4) and the IN signal. Thus, 16 bits of data (DATA D (15:00)] are now gated to the Unibus. Finally, a third read instruction initiates the third DATI. Again, a new ADDRESS is presented to the M105 module in slot F01 along with the CONTROL signals. M105 decodes the new address and generates another SELECT SIGNAL (SEL 6) and the IN signal for the M1621 module. The final 6 bits [DATA D (00:05)] of the 34 bits of data are now gated through the M1621 module to the Unibus.

During interrupt-controlled DATI transfers, the user's device sends the READY signal to the M1621 module when data is ready for transfer, and places 34 bits of data on the DATA LINES. The M1621 module now produces INTR A and INTR ENB A and applies these signals to the M7821 interrupt control module (slot B03). M7821 places bus CONTROL signals on the Unibus to request bus control. Bus control is granted to the M7821 module (after performing the standard Unibus handshake routine), and as bus master, M7821 places an Interrupt VECTOR ADDRESS [D (08:02)] on the Unibus. The PDP-11 processor then goes to the interrupt service routine at the specified vector address. Instructions in the service routine clear the interrupt and transfer the 34 bits from the DATA LINES by utilizing three DATI cycles as described in the preceding paragraph on program-controlled transfers.

4.2.2 Unibus to User's Device Data Transfers

Data transfers from the Unibus to the user's device can be program-controlled or interrupt-controlled. Twenty-four data bits may be transferred through the M1623 module (slot C03—F03) to the user's device. Since the M1623 module contains three eight-bit registers, data transfers may take the form of byte (DATOB) or word (DATO) transfers. Transfers are initiated when the user's software program instructs the PDP-11 processor to move the data from the processor to the M1623 module. The PDP-11 processor supplies the proper M1623 module ADDRESS [A (17:00)] and CONTROL signals to the M105 address selector module (slot F01) and places DATA D (07:00) (this example assumes three DATOB transfers) on the lines to the M1623 module. M105 decodes the ADDRESS and produces a SELECT SIGNAL (assume SEL 4) and the OUT LOW signal. The OUT LOW and SELECT SIGNAL are then applied to the M1623 module to transfer 8 bits of the 24 bits of data to the user's device via the CONTROL LINES and STROBE signal. The processor now places new ADDRESS and CONTROL signals on the lines to the M105 module, and the second byte of data [DATA D (07:00)] on the lines to the M1623 module. SELECT SIGNAL (SEL 2 in this case) and OUT LOW are decoded by the M105 module and applied to M1623 to transfer the second byte to the user's device. Finally, a new ADDRESS and the third byte of data [DATA D (15:08)] are applied to the M105 and M1623 modules. SELECT SIGNAL (SEL 2 in this case) and OUT HIGH are now decoded by the M105 module and applied to the M1623 module. The third 8-bit byte of the 24 bits of output data are now applied to the user's device.

The preceding paragraph dealt with three DATOBs to transfer 24 bits of data to the user's device. One DATO and one DATOB can also be utilized to transfer the 24 bits. For DATO transfers, the PDP-11 processor places the ADDRESS and CONTROL signals on the lines to the M105 module, and places 16 bits of data [DATA D (15:00)] on the lines to the M1623 module. Module M105 decodes the proper SELECT SIGNAL (SEL 2), OUT LOW, and OUT HIGH. These signals are then applied to the M1623 to load the 16 bits of data into two of the three 8-bit registers located in the M1623 module. Thus, 16 bits are transferred on the CONTROL LINES to the user's device. The final 8 bits of data are transferred during a DATOB. Again, the M105 module receives the proper ADDRESS and CONTROL signals, while M1623 receives 8 bits of data (DATA D (07:00)]. M105 now decodes another SELECT SIGNAL (SEL 4) and OUT LOW. These signals are applied to M1623 to load the final 8 bits of the 24 bits of data into the third 8-bit register for transfer to the user's device.

Data from the M1623 module transferred to the user's device can be "read back" to the PDP-11 processor. The 24 bits of data are read in two segments. First, a DATI reads 16 bits, then a second DATI reads the remaining 8 bits. To accomplish this data read back, the PDP-11 processor supplies the proper ADDRESS and CONTROL to the M105 module. For DATI, M105 decodes SELECT SIGNAL (SEL 2) and IN. These signals are applied to the M1623 modules to enable bus drivers, which return the outputs of two 8-bit registers to the Unibus. The last 8 bits of data are read back during the second DATI. Again, M105 receives the proper ADDRESS and CONTROL signals. SELECT SIGNAL (SEL 4) and IN are decoded by M105 and are applied to M1623. The 8-bit output of the third M1623 storage register is now read back to the Unibus.

It was previously mentioned that data transfers to the user's device can be interrupt-controlled. Interrupts are controlled by the READY signal from the user's device. At M1623, READY causes an interrupt request (INTR B) to be applied to the M7821 module (slot B03) along with INTR ENB B. (INTR ENB B must be set by the user's software.) The M7821 module places bus CONTROL signals on the Unibus to request bus control. Bus control is then granted to the M7821 module (after performing the standard Unibus handshake routines), and as bus master, M7821 places an interrupt VECTOR ADDRESS [D(08:02)] on the Unibus. The PDP-11 processor then goes to the interrupt service routine at the specified vector address. Instructions in the service routine transfer 24 bits of data from the processor to the user's device via the DEC bit utilizing DATOB and/or DATO cycles as described in the preceding paragraphs on program-controlled transfers.

As a final note, the M1623 module contains five gates which function as a Control and Status Register (CSR). Three of these gates handle STATUS bits from the user's device, while the remaining two gates handle INT and INT ENB status bits. These CSR bits are gated from the M1623 module to the Unibus by SELECT SIGNAL (SEL 0) and IN from the M105 module. Figure 4-2 shows the M1623 CSR bit assignments.

4.3 INPUT/OUTPUT TIMING

Input data transfer timing for the M1621 module and output data transfer timing for the M1623 module are program-controlled. The only user timing adjustments are for the M1621 and M1623 one-shot pulse generators that produce the DATA STROBE pulses. Information pertaining to the M1621 and M1623 one-shot pulse adjustments is presented in Paragraphs 2.9 and 2.11.

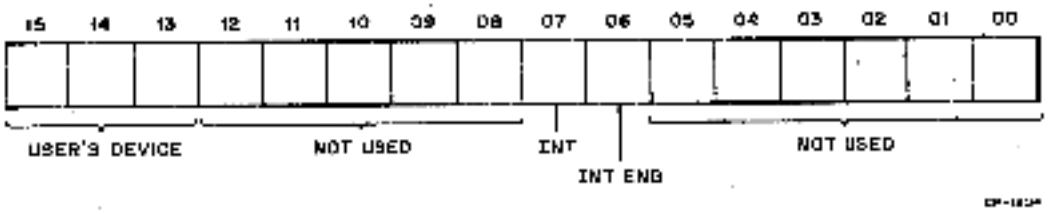

Figure 4-2 Module M1623 CSR Bit Assignments

APPENDIX A
DECkit 11-M PARTS LIST

Table A-1 lists the parts supplied with DECkit11-M by part number, description, and quantity used.

Table A-1
DECkit11-M Parts List

Part No.	Description	Quantity
M105	Address Selector	2
M1621	DVM Data Input Interface	1
M1623	Instrument Remote Control Interface	1
M7821	Interrupt Control	1
G7361	Priority Select	1
5408776	Level 4 Priority Jumper Plug	2
5410341	No Request Priority Jumper Plug	2
BB11-M	Mounting Panel	1
H852	Module Holder (rib type)	2
H853	Module Holder (non-rib type)	1

APPENDIX B
MODULE M1623 OUTPUT CONNECTOR PIN ASSIGNMENTS

Table B-1 lists the signals on the M1623 output connector by pin designation, signal name, signal description, and drive capability.

Table B-1
M1623 Output Connector Pin Assignments

Pin	Signal	Description	Drive Capability (TTL Unit Loads)
A	GROUND	DC Ground	–
B	+5 Vdc	Available to User	–
C	Not Used	–	–
D	D07 OUT	Register B Bit 07 1 = High	20
E	D07 OUT	Register A Bit 07 1 = High	20
F	D01 OUT	Register A Bit 01 1 = High	20
H	D04 OUT	Register A Bit 04 1 = High	20
J	D00 OUT	Register B Bit 00 1 = High	20
K	D04 OUT	Register B Bit 04 1 = High	20
L	D00 OUT	Register A Bit 00 1 = High	20
M	Not Used		–
N	D02 OUT	Register A Bit 02 1 = High	20

Table B-1 (Cont)
M1623 Output Connector Pin Assignments

Pin	Signal	Description	Drive Capability (TTL Unit Loads)
P	Not Used	–	–
R	D02 OUT	Register B Bit 02 1 = High	20
S	Not Used		–
T	Not Used	–	–
U	Not Used		–
V	D13 OUT	Register C Bit 13 1 = High	20
W	Not Used	–	–
X	D12 OUT	Register C Bit 12 1 = High	20
Y	Not Used	–	–
Z	D15 OUT	Register C Bit 15 1 = High	20
AA	Not Used	–	–
BB	Not Used	–	
CC	Not Used	–	–
DD	D11 OUT	Register C Bit 11 1 = High	20
EE	D14 IN*	Status Bit 14 1 = High	1
FF	D10 OUT	Register C Bit 10 1 = High	20
HH	D13 IN*	Status Bit 13 1 = High	1
JJ	DATA STROBE OUT	User-Selected Polarity	20
KK	D11 IN*	Status Bit 11 1 = High	1

*This signal is an input signal on the output connector. It presents a load and has no drive capability.

Table B-1 (Cont)
M1623 Output Connector Pin Assignments

Pin	Signal	Description	Drive Capability (TTL Unit Loads)
LL	D06 OUT	Register B Bit 06 1 = High	20
MM	READY IN*	User-Selected Polarity	20
NN	D06 OUT	Register A Bit 06 1 = High	20
PP	D05 OUT	Register A Bit 05 1 = High	20
RR	D08 OUT	Register C Bit 08 1 = High	20
SS	D05 OUT	Register B Bit 05 1 = High	20
TT	D09 OUT	Register C Bit 09 1 = High	20
UU	D03 OUT	Register A Bit 03 1 = High	20
VV	D03 OUT	Register B Bit 03 1 = High	20

*This signal is an input signal on the output connector. It presents a load and has no drive capability.

APPENDIX C
MODULE M1621 INPUT CONNECTOR PIN ASSIGNMENTS

Table C-1 lists the signals on the M1621 input connector by pin designation, signal name, signal description, and unit loads.

Table C-1
M1621 Input Connector Pin Assignments

Pin	Signal	Description	Loading (TTL Unit Loads)
A	GROUND	DC Ground	–
B	+5 Vdc	Available to User	–
C	Not Used	–	–
D	D08 IN	Input Bit 08	1
E	DATA STROBE OUT*	User-Selected Polarity	20
F	D08	Input Bit 08 1 = High	1
H	READY IN	User-Selected Polarity	1
J	D13	Input Bit 13 1 = High	1
K	STATUS IN	User's Device Status Bit 14 1 = High	1
L	D14	Input Bit 14 1 = High	1
M	D03 IN	Input Bit 03 1 = High	1
N	D15 IN	Input Bit 15 1 = High	1
P	D02 IN	Input Bit 02 1 = High	1
R	D12 IN	Input Bit 12 1 = High	1

*This signal is an output signal on the input connector. It has drive capability and does not present a load.

Table C-1 (Cont)
M1621 Input Connector Pin Assignments

Pin	Signal	Description	Loading (TTL Unit Loads)
S	D03 IN	Input Bit 02 1 = High	1
T	D11 IN	Input Bit 11 1 = High	1
U	D03 IN	Input Bit 03 1 = High	1
V	D11 IN	Input Bit 11 1 = High	1
W	D02 IN	Input Bit 02 1 = High	1
X	D07 IN	Input Bit 07 1 = High	1
Y	D03 IN	Input Bit 03 1 = High	1
Z	D07 IN	Input Bit 07 1 = High	1
AA	D00 IN	Input Bit 00 1 = High	1
BB	D09 IN	Input Bit 09 1 = High	1
CC	D01 IN	Input Bit 01 1 = High	1
DD	D09 IN	Input Bit 09 1 = High	1
EE	D01 IN	Input Bit 01 1 = High	1
FF	D10 IN	Input Bit 10 1 = High	1
HH	D05 IN	Input Bit 05 1 = High	1
JJ	D10 IN	Input Bit 10 1 = High	1

Table C-1 (Cont)
M1621 Input Connector Pin Assignments

Pin	Signal	Description	Loading (TTL Unit Loads)
KK	D05 IN	Input Bit 05 1 = High	1
LL	D06 IN	Input Bit 06 1 = High	1
MM	D01 IN	Input Bit 01 1 = High	1
NN	D06 IN	Input Bit 06 1 = High	1
PP	D00 IN	Input Bit 00 1 = High	1
RR	D04 IN	Input Bit 04 1 = High	1
SS	D00 IN	Input Bit 00 1 = High	1
TT	D04 IN	Input Bit 04 1 = High	1
UU	D04 IN	Input Bit 04 1 = High	1
VV	D05 IN	Input Bit 05 1 = High	1

Reader's Comments

DECkit11-M ASSEMBLY AND
INSTALLATION MANUAL
EK-K11M-IN-001

Your comments and suggestions will help us in our continuous effort to improve the quality and usefulness of our publications.

What is your general reaction to this manual? In your judgment is it complete, accurate, well organized, well written, etc.? Is it easy to use? _____

What features are most useful? _____

What faults do you find with the manual? _____

Does this manual satisfy the need you think it was intended to satisfy? _____

Does it satisfy *your* needs? _____ Why? _____

Would you please indicate any factual errors you have found. _____

Please describe your position. _____

Name _____ Organization _____

Street _____ Department _____

City _____ State _____ Zip or Country _____

FOLD ON DOTTED LINE

Fold Here

Do Not Tear - Fold Here and Staple

FIRST CLASS
PERMIT NO. 33
MAYNARD, MASS.

BUSINESS REPLY MAIL
NO POSTAGE STAMP NECESSARY IF MAILED IN THE UNITED STATES

Postage will be paid by:

Digital Equipment Corporation
Technical Documentation Department
146 Main Street
Maynard, Massachusetts 01754

digital

COMPONENTS GROUP

DIGITAL EQUIPMENT CORPORATION, Component Group Headquarters: 1 Iron Way, Marlborough, Mass. 01752. Telephone: (617) 481-7400