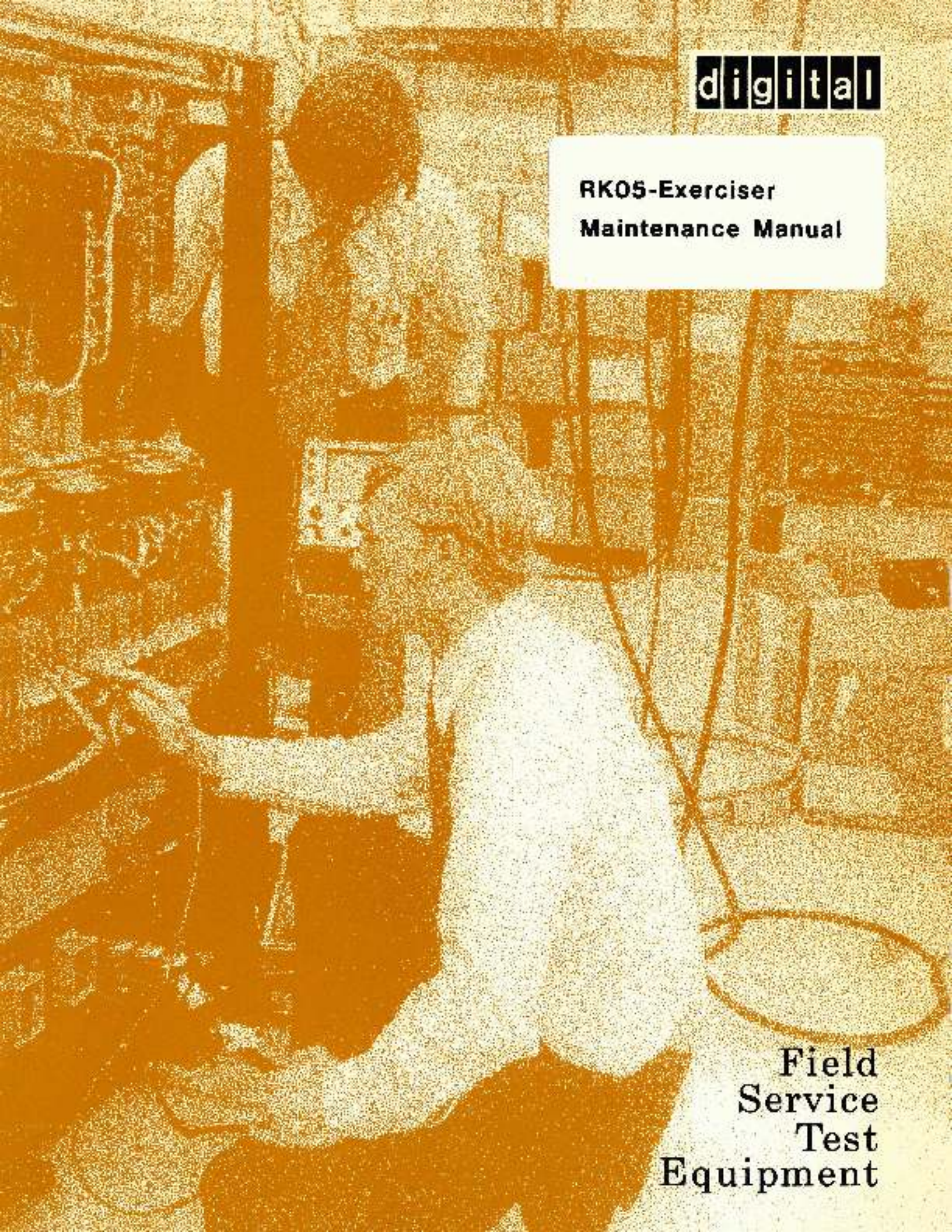

digital

RK05-Exerciser Maintenance Manual

Field Service Test Equipment

EK-RK05-MM-002

RK05-Exerciser
Maintenance Manual

digital equipment corporation · maynard, massachusetts

1st Edition, April 1974

Copyright © 1974 by Digital Equipment Corporation

The material in this manual is for informational purposes and is subject to change without notice.

Digital Equipment Corporation assumes no responsibility for any errors which may appear in this manual.

Printed in U.S.A.

The following are trademarks of Digital Equipment Corporation, Maynard, Massachusetts:

DEC	PDP
FLIP CHIP	FOCAL
DIGITAL	COMPUTER LAB

CONTENTS

		Page
CHAPTER 1	**GENERAL INFORMATION**	
1.1	INTRODUCTION	1-1
1.2	GENERAL DESCRIPTION	1-1
1.3	PHYSICAL DESCRIPTION	1-1
1.3.1	Exerciser Chassis	1-1
1.3.2	Bus Terminator Module	1-1
1.3.3	Positioner Exerciser Module	1-1
1.3.4	Writer Exerciser Module	1-1
1.3.5	Front Panel	1-1
1.3.6	Unibus Cable Assembly	1-3
1.3.7	Power Cable	1-3
1.4	SPECIFICATIONS	1-3
1.4.1	Environmental	1-3
1.4.2	Power Requirements	1-3
1.4.3	Packaging	1-3
CHAPTER 2	**UNPACKING, SET-UP AND ACCEPTANCE TESTING**	
2.1	UNPACKING PROCEDURE	2-1
2.2	SET-UP PROCEDURE	2-1
2.3	ACCEPTANCE TEST PROCEDURE	2-3
2.3.1	Writer Exerciser Module Test Procedure	2-3
2.3.2	Positioner Exerciser Module Test Procedure	2-6
CHAPTER 3	**OPERATION**	
3.1	SCOPE	3-1
3.2	CONTROLS AND INDICATORS	3-1
3.3	MODES OF OPERATION	3-3
3.3.1	Step Mode	3-3
3.3.2	Alternate Mode	3-3
3.3.3	Oscillate Mode	3-3
3.3.4	Random Mode	3-4
3.4	UTILIZATION PROCEDURE	3-4
CHAPTER 4	**THEORY OF OPERATION**	
4.1	SCOPE	4-1
4.2	FUNCTIONAL DESCRIPTION	4-1
4.2.1	Writer Exerciser	4-1
4.2.1.1	Sector Decoder	4-1
4.2.1.2	Write Control Logic	4-1
4.2.1.3	Write Clock	4-1
4.2.1.4	Clock and Data Output Multiplexer	4-1
4.2.1.5	Head Select Switch	4-1
4.2.2	Positioner Exerciser	4-1
4.2.2.1	Strobe Oscillator	4-2
4.2.2.2	Address Counter Control Logic	4-2
4.2.2.3	Address Counter	4-2
4.2.2.4	Cylinder Address Source Select Logic	4-2
4.2.2.5	Fault Detect Logic	4-4

CONTENTS (Cont)

		Page
4.3	DETAILED LOGIC DESCRIPTION	4-4
4.3.1	Writer Exerciser	4-4
4.3.1.1	Sector Decoder and Write Sector Switch	4-4
4.3.1.2	Write Control Logic	4-4
4.3.1.3	Write Clock	4-5
4.3.1.4	Clock and Data Output Multiplexer	4-5
4.3.2	Positioner Exerciser	4-5
4.3.2.1	Strobe Oscillator	4-5
4.3.2.2	Address Counter Control Logic	4-8
4.3.2.3	Address Counter	4-10
4.3.2.4	Cylinder Address Source Select Logic	4-10
4.3.2.5	Fault Detect Logic	4-11
4.4	FLOW DIAGRAM DESCRIPTION	4-11
CHAPTER 5	**MAINTENANCE**	
5.1	SCOPE	5-1
5.2	MAINTENANCE PHILOSOPHY	5-1
5.3	TEST EQUIPMENT REQUIRED	5-1
5.4	PREVENTIVE MAINTENANCE	5-1
5.5	CORRECTIVE MAINTENANCE	5-2
CHAPTER 6	**RK05 DISK DRIVE MAINTENANCE USING THE RK05 EXERCISER**	
6.1	SCOPE	6-1
6.2	ALIGNMENT, CHECKS, AND ADJUSTMENTS	6-1
6.2.1	Alignment Cartridges	6-1
6.2.1.1	RK05K-AC Alignment Cartridge	6-1
6.2.1.2	2315 CE Test Cartridge Shim Installation	6-2
6.2.2	Servo System Timing Checks and Adjustments	6-2
6.2.2.1	Dynamic Off-Line Checks and Adjustments	6-4
6.2.2.2	Static Tests and Adjustments	6-9
6.2.3	Read/Write Data Separator (G180 Card) Adjustment	6-10
6.2.4	Read/Write Head Check and Alignment	6-10
6.2.4.1	RK05K-AC Alignment Cartridge	6-11
6.2.4.2	2315 CE Pack	6-14
6.2.5	Index/Sector Timing Adjustment	6-16
6.2.5.1	RK05K-AC Alignment Cartridge	6-16
6.2.5.2	2315 CE Pack	6-18
6.2.6	Cartridge Receiver Alignment	6-19
APPENDIX A	**IC SCHEMATICS**	
A.1	7442 4-LINE-TO-10-LINE DECODERS	A-1
A.2	7474 DUAL D-TYPE EDGE-TRIGGERED FLIP-FLOPS	A-2
A.3	74123 MONOSTABLE MULTIVIBRATOR	A-3
A.4	74193 SYNCHRONOUS 4-BIT UP/DOWN COUNTER (DUAL CLOCK WITH CLEAR)	A-4
APPENDIX B	**ENGINEERING DRAWING SET**	

ILLUSTRATIONS

Figure No.	Title	Page
1-1	RK05 Exerciser Components	1-2
1-2	Bus Terminator Module	1-2
1-3	Unibus Cable Assembly	1-3
1-4	Power Cable	1-4
2-1	Exerciser to RK05 Disk Drive Connection Diagram	2-2
2-2	RK05 Exerciser to Multiple RK05 Disk Drives Connection Diagram	2-3
2-3	Write Gate Data Waveform	2-4
2-4	Writer Exerciser Clock and Data Waveforms	2-5
2-5	Write Data Waveforms	2-7
2-6	How to Read a Vernier	2-8
3-1	RK05 Exerciser Front Panel Controls and Indicators	3-1
4-1	RK05 Exerciser Functional Block Diagram	4-3
4-2	Sector Decoder and Write Section Switch Diagram	4-4
4-3	Write Control Logic	4-5
4-4	Write Clock	4-6
4-5	Write Clock and Multiplexer Timing Diagram	4-6
4-6	Clock and Data Multiplexer Logic	4-7
4-7	Strobe Oscillator	4-7
4-8	Address Counter Control Logic	4-9
4-9	Address Counter Logic	4-10
4-10	Cylinder Address Source Select Logic	4-11
4-11	Fault Detect Logic	4-11
4-12	Writer Exerciser Flow Diagram	4-12
4-13	Positioner Exerciser Step Mode Flow Diagram	4-13
4-14	Positioner Exerciser Alternate Mode Flow Diagram	4-14
4-15	Positioner Exerciser Oscillate Mode Flow Diagram	4-15
4-16	Positioner Exerciser Random Mode Flow Diagram	4-16
5-1	Troubleshooting Flow Diagram	5-3
6-1a	Spindle Runout (Negligible Runout)	6-1
6-1b	Spindle Runout (Considerable Runout)	6-2
6-2	CE Test Cartridge Shim Installation	6-3
6-3	Sine Amplitude/Offset and Velocity Offset Waveform	6-5
6-4	Cosine Amplitude/Offset Waveform	6-6
6-5	Velocity Amplitude Waveform	6-7
6-6	Acceleration Waveform	6-7
6-7	Full Stroke Waveform	6-8
6-8	Full Stroke Position Waveform	6-8
6-9	Outer Limit Waveform	6-9
6-10	RK05-AC Alignment Cartridge Head Alignment Waveforms	6-13
6-11	Read/Write Head Adjustments	6-15
6-12	2315 CE Pack Head Alignment Waveforms	6-17
6-13	Index/Sector Waveform	6-19
6-14	Cartridge to Receiver Clearance	6-20
6-15	Cartridge Receiver Clearances	6-20
A-1	7442 Package and Logic Diagrams	A-1
A-2	DEC 74123 IC Illustrations	A-3
A-3	DEC 74123 IC Output Pulse Width vs. External Timing Capacitance	A-3
A-4	74193 Logic Diagram	A-5

TABLES

Table No.	Title	Page
3-1	Exerciser Controls and Indicators	3-2
3-2	Exerciser Operating Procedure	3-4
3-3	Data Bits Switch to Data Bit Correlation	3-8
5-1	Test Equipment Required	5-1
5-2	Preventive Maintenance Schedule	5-2
6-1	Servo System Checks	6-2
6-2	Servo System Adjustments	6-4

RK05 EXERCISER MAINTENANCE MANUAL

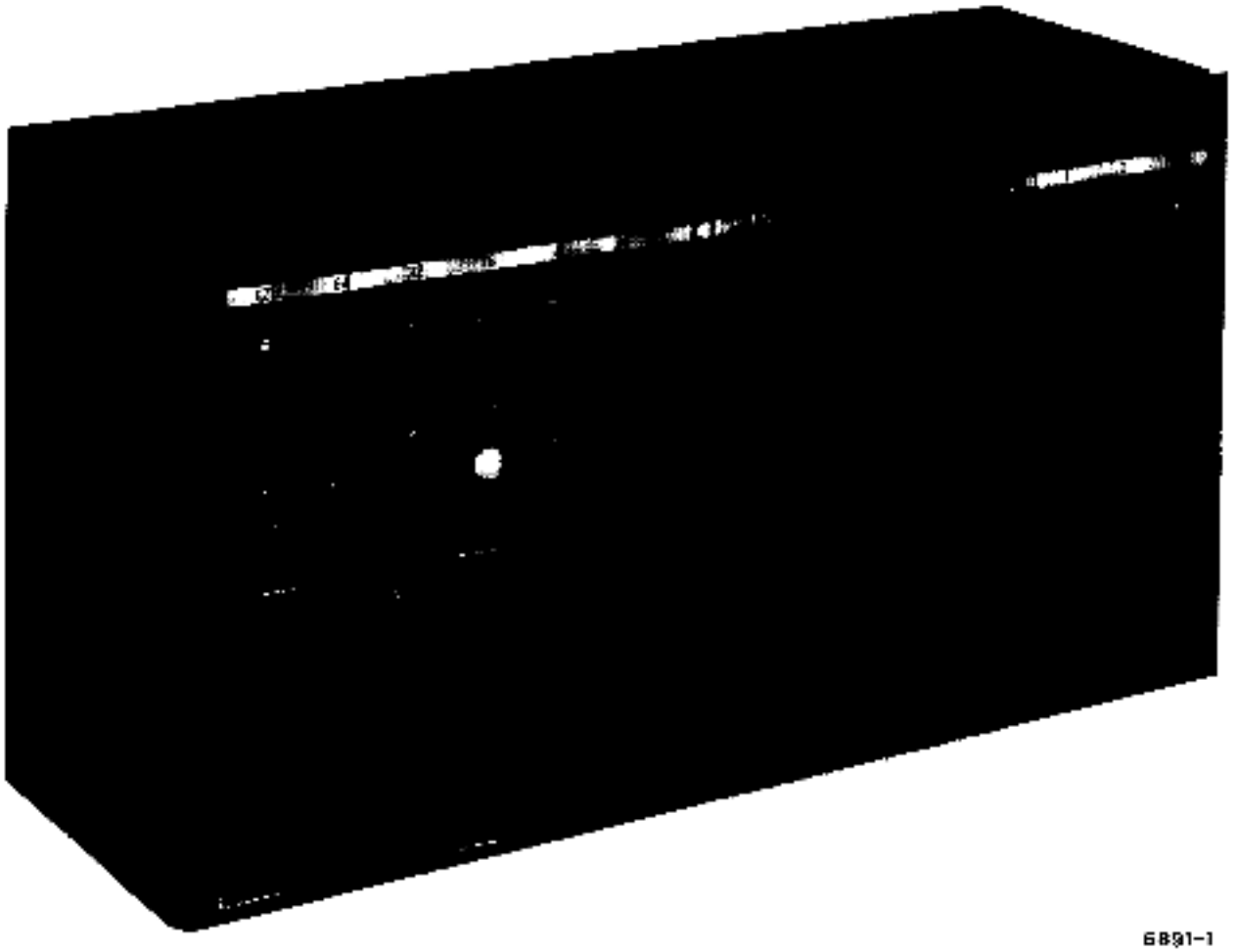

6891-1

RK05-TA
RK05 - Exerciser

CHAPTER 1
GENERAL INFORMATION

1.1 INTRODUCTION

This manual provides a complete description of the RK05 Exerciser, including physical, functional, logic level, and flow diagram descriptions, specifications, and operation and maintenance procedures.

1.2 GENERAL DESCRIPTION

The RK05 Exerciser is a portable unit used to exercise the RK05 Disk Drive off-line. The unit generates all the control signals necessary to exercise the disk drive linear positioner circuitry and write circuitry; the processor and drive controller are not needed.

The exerciser can be used to isolate most hard disk drive faults and to verify proper operation once the fault has been corrected.

NOTE

If reliability problems are encountered, the disk drive should be checked out on-line, using MAINDEC diagnostics.

The exerciser is completely contained in an aluminum chassis and is powered by the RK05 Disk Drive power supply. A special 4-wire power cable serves to route the power supply outputs (+15 V, −15 V, +5 V) to the exerciser without interrupting power to the disk drive.

1.3 PHYSICAL DESCRIPTION

The exerciser (Figure 1-1) consists of five subassemblies and two cable assemblies: exerciser chassis, front panel, bus terminator module, test positioner module, test writer module, bus cable assembly, and power cable

1.3.1 Exerciser Chassis

The 9605720 chassis is a 6-1/10 in. high by 11-9/10 in. wide by 3-6/10 in. deep metal box with a hinged front panel.

1.3.2 Bus Terminator Module

The M930 Bus Terminator module (Figure 1-2) is a dual height module that is mounted in slot 2 of the connector block and contains all the circuitry necessary to terminate the Unibus.

1.3.3 Positioner Exerciser Module

The G503 Positioner Exerciser Module (Figure 1-1) is a dual height module that is mounted in slot 3 of the connector block. This module contains all the logic necessary to exercise the disk drive linear positioner circuitry. In response to front panel switch setting and disk drive control signal inputs, the module generates control signal and cylinder address outputs to the disk drive linear positioner circuitry. The module also monitors the disk drive fault lines and illuminates the front panel fault indicators when a fault is detected. Refer to engineering drawing D-CS-G503-0-1 for a complete physical layout and parts identification.

1.3.4 Writer Exerciser Module

The G502 Writer Exerciser Module (Figure 1-1) is a dual height module that is mounted in slot 4 of the connector block. This module contains all the logic necessary to exercise the disk drive write circuitry. In response to front panel switch settings and disk drive control signal inputs, the module generates control signals, clock, and data outputs to the disk drive write circuitry. Refer to engineering drawing D-CS-G502-0-1 for a complete physical layout and parts identification.

1.3.5 Front Panel

The 9605719 front panel (Figure 1-1) contains a 4-pin female Mate-N-Lok input power connector and controls and indicators necessary to exercise the disk drive. Refer to engineering drawing D-UA-RK05-TA-0 for wiring data, parts identification, and a complete physical layout.

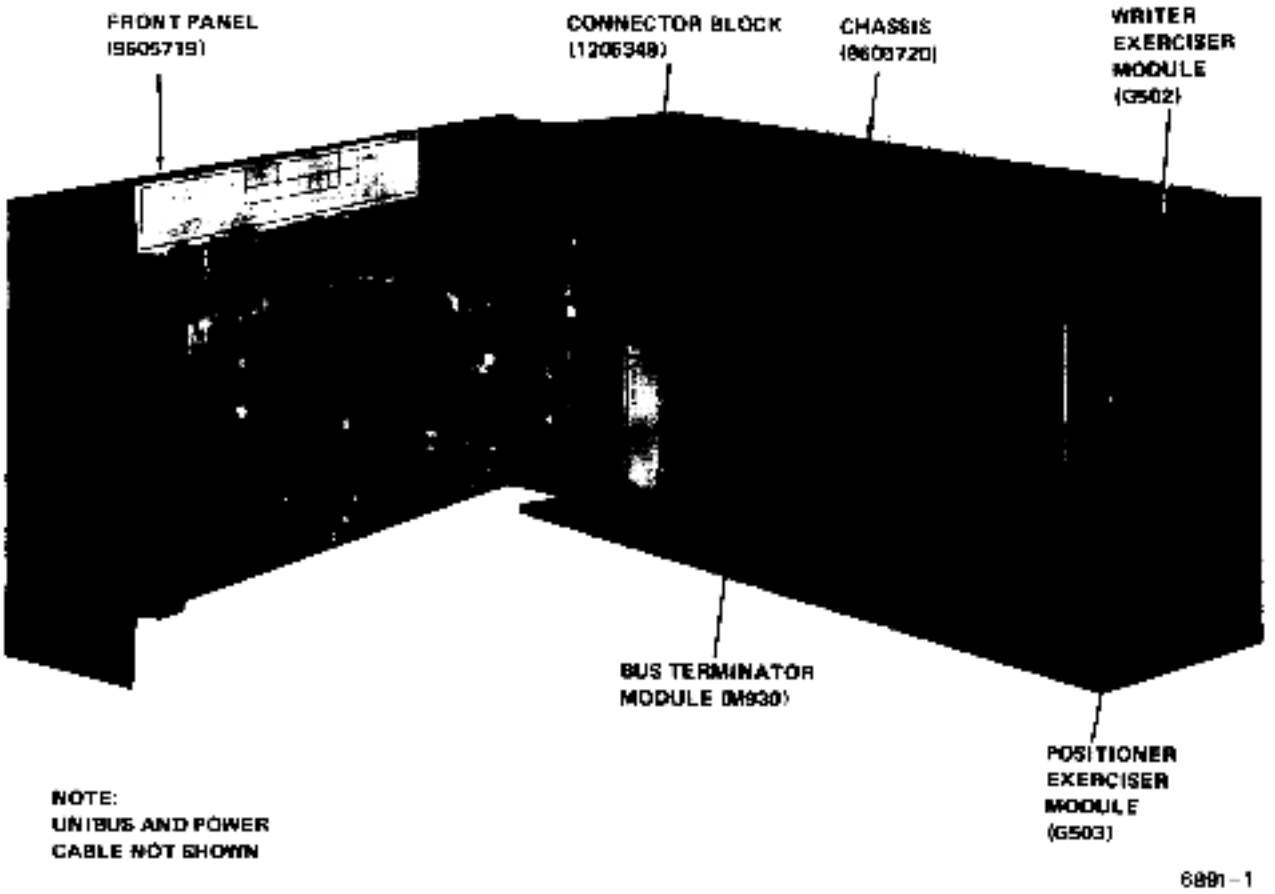

Figure 1-1 RK05 Exerciser Components

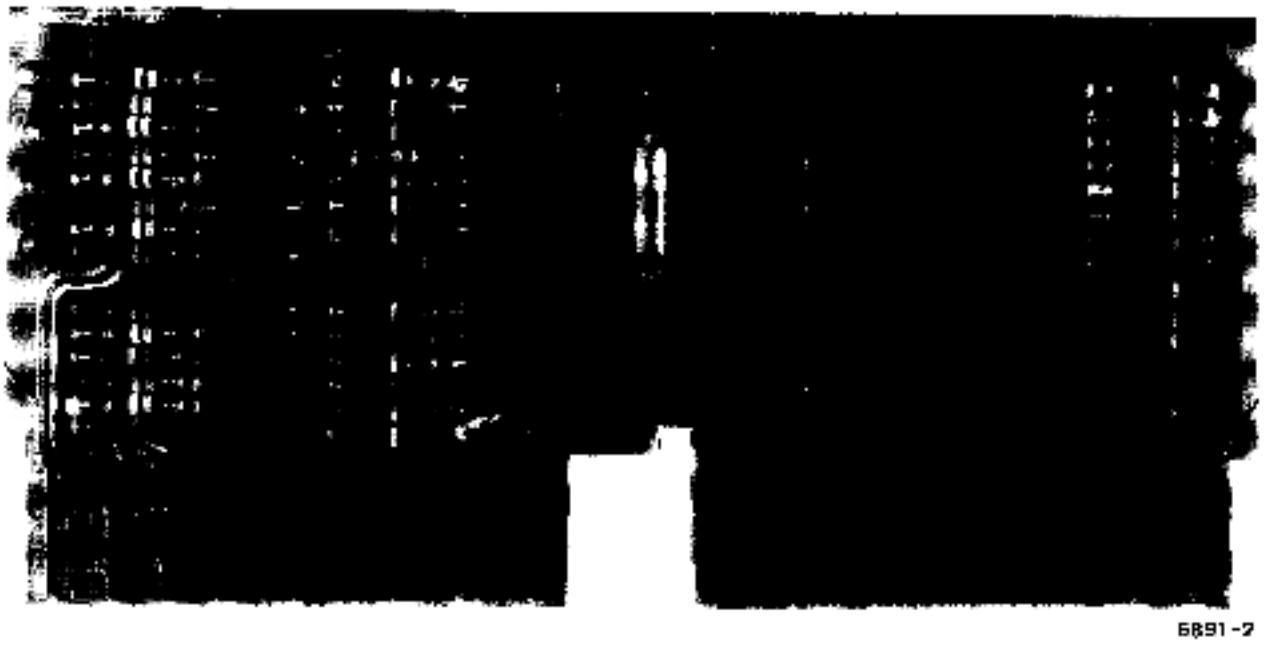

Figure 1-2 Bus Terminator Module

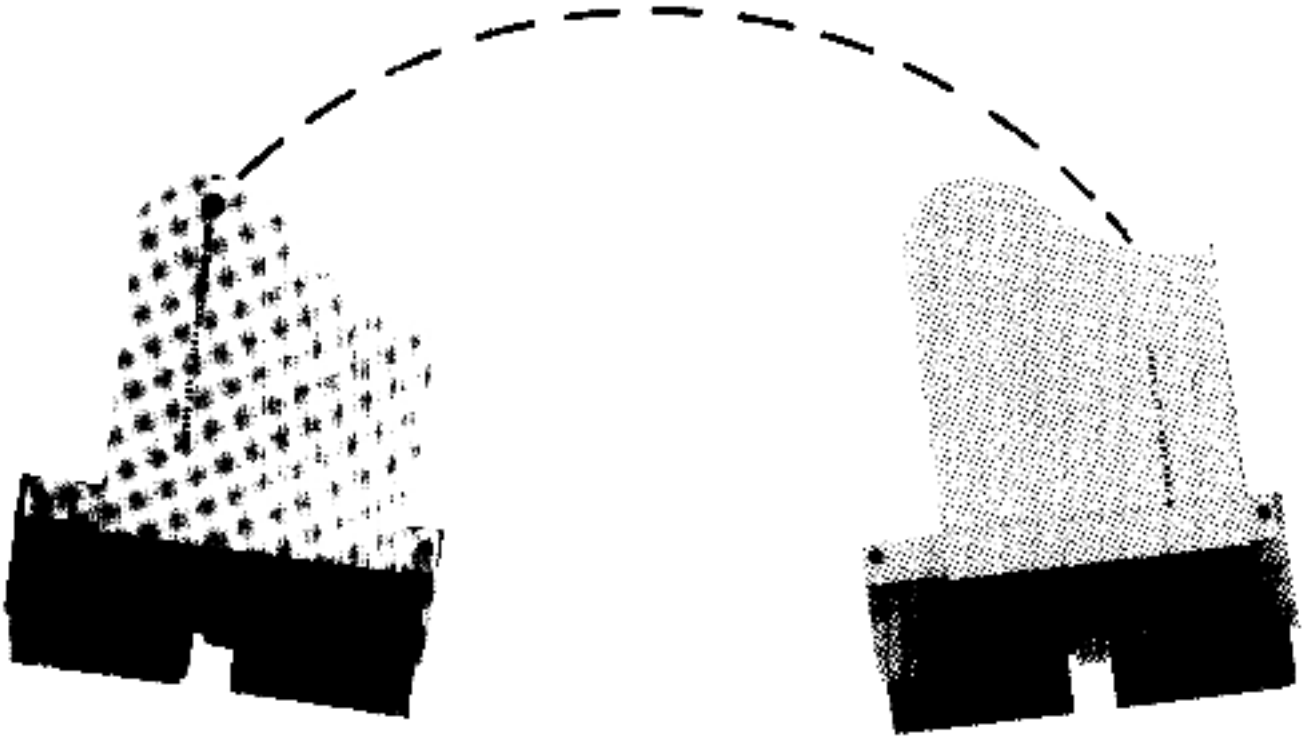

6851 B

Figure 1-3 Unibus Cable Assembly

1.3.6 Unibus Cable Assembly

The BC11A Unibus Cable Assembly (Figure 1-3) consists of a 120-conductor ribbon cable with a bus connector attached to each end. One bus connector is mounted in slot 1 of the exerciser connector block and the other connector is mounted in slot 8 of the disk drive electronic module. The Unibus cable is the only signal interface between the exerciser and disk drive. Refer to engineering drawing D-UA-BC11A-0-0 for physical specifications.

1.3.7 Power Cable

The 9606036 power cable (Figure 1-4) consists of a 6-ft 4-wire cable harness, a 4-pin male Mate-N-Lok connector (P1), a 9-pin male Mate-N-Lok connector (P2), and a 9-pin female Mate-N-Lok connector (J1). The 4-pin Mate-N-Lok connects to connector J1 located on the exerciser front panel. The two 9-pin Mate-N-Loks connect between the disk drive power supply and the disk drive power harness. The power cable routes dc power from the disk drive to the exerciser. Refer to engineering drawing D-IA-9606036-0-0 for complete physical specifications and wiring data.

1.4 SPECIFICATIONS

1.4.1 Environmental

Ambient Temperature
50° to 110° F (67° to 73° F nominal)

Relative Humidity
8 to 80% (no condensation)

1.4.2 Power Requirements

Input Voltage (dc)

+15 ± 0.75 Vdc −15 ± 0.75 Vdc +5 ± 0.15 Vdc	Power taken for disk drive power supply.

1.4.3 Packaging

Height: 6-1/10 in.
Width: 11-9/10 in.
Depth: 3-6/10 in.
Weight: Less than 10 lb

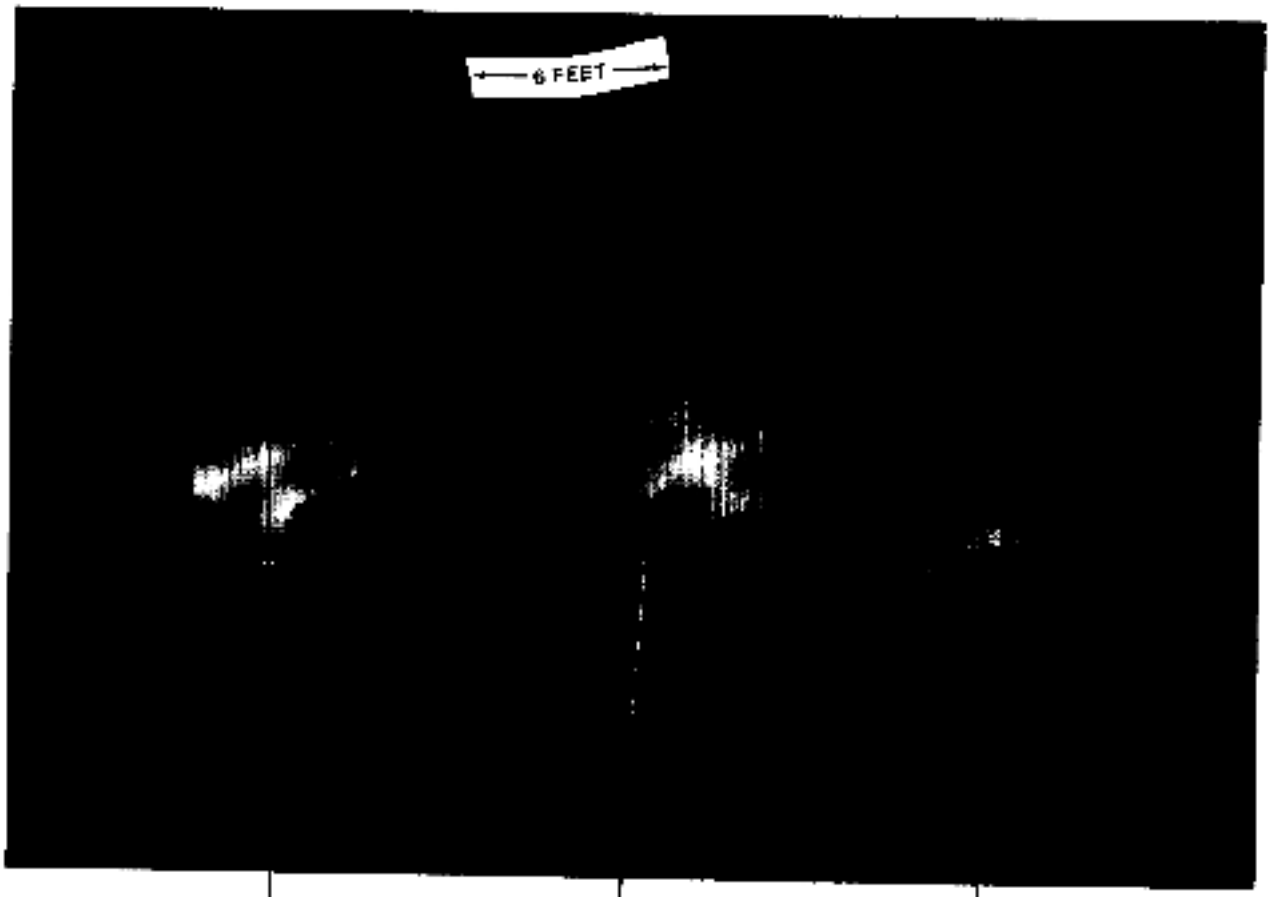

P1, 4 PIN MATE-N-LOK CONNECTOR (CONNECT TO J1 ON EXERCISER FRONT PANEL)

J1, 9 SOCKET MATE-N-LOK CONNECTOR (CONNECT TO P1 ON DISK DRIVE POWER HARNESS)

P2, 9 PIN MATE-N-LOK CONNECTOR (CONNECTS TO J1 ON DISK DRIVE POWER SUPPLY)

6891-2

Figure 1-4 Power Cable

CHAPTER 2
UNPACKING, SET-UP AND ACCEPTANCE TESTING

2.1 UNPACKING PROCEDURE

To unpack the RK05 Exerciser, proceed as follows:

1. Unpack the unit from the shipping container and inspect for damage. Damage claims should be directed to the responsible shippers.

2. Check that the Unibus and power cables are included with the exerciser.

2.2 SET-UP PROCEDURE

NOTE

The RK05 Exerciser may be connected to one disk drive or as many as four disk drives simultaneously; however, the exerciser can only exercise one drive at a time.

1. To connect the RK05 Exerciser to one RK05 Disk Drive, the Unibus cable is installed as follows (Figure 2-1):

   a. Unplug the disk drive ac power cord.

   b. Open the exerciser chassis and mount either end of the Unibus cable assembly (BC11A) into slot 1 of the connector block.

   c. Remove the disk drive prefilter and ensure that the bus terminator module is mounted in slot 5 of the disk drive electronic module.

   d. Mount the other end of the Unibus cable assembly into slot 8 of the disk drive electronic module.

2. To connect the RK05 Exerciser to four RK05 Disk Drives, the Unibus cable is installed as follows (Figure 2-2):

   a. Remove all power from the RK05 Disk Drives.

   b. Disconnect the controller end of the Unibus cable, which connects the RK05 Disk Drive to the controller module.

   c. Open the exerciser chassis and mount the disconnected Unibus cable into slot 1 of the connector block.

3. To install the RK05 Exerciser power cable, proceed as follows (Figure 2-1):

   a. Remove the RK05 Disk Drive top cover.

   b. Disconnect the P1 Mate-N-Lok connector on the disk drive power supply.

   c. Connect the 9-pin female connector (J1) of the exerciser power cable to P1.

   d. Connect the 9-pin male connector (P2) of the exerciser power cable to Mate-N-Lok connector J1 on the disk drive power supply.

   e. Connect the 4-pin male connector (P1) of the exerciser power cable to the 4-pin female connector (J1) located on the exerciser front panel.

(continued on page 2-3)

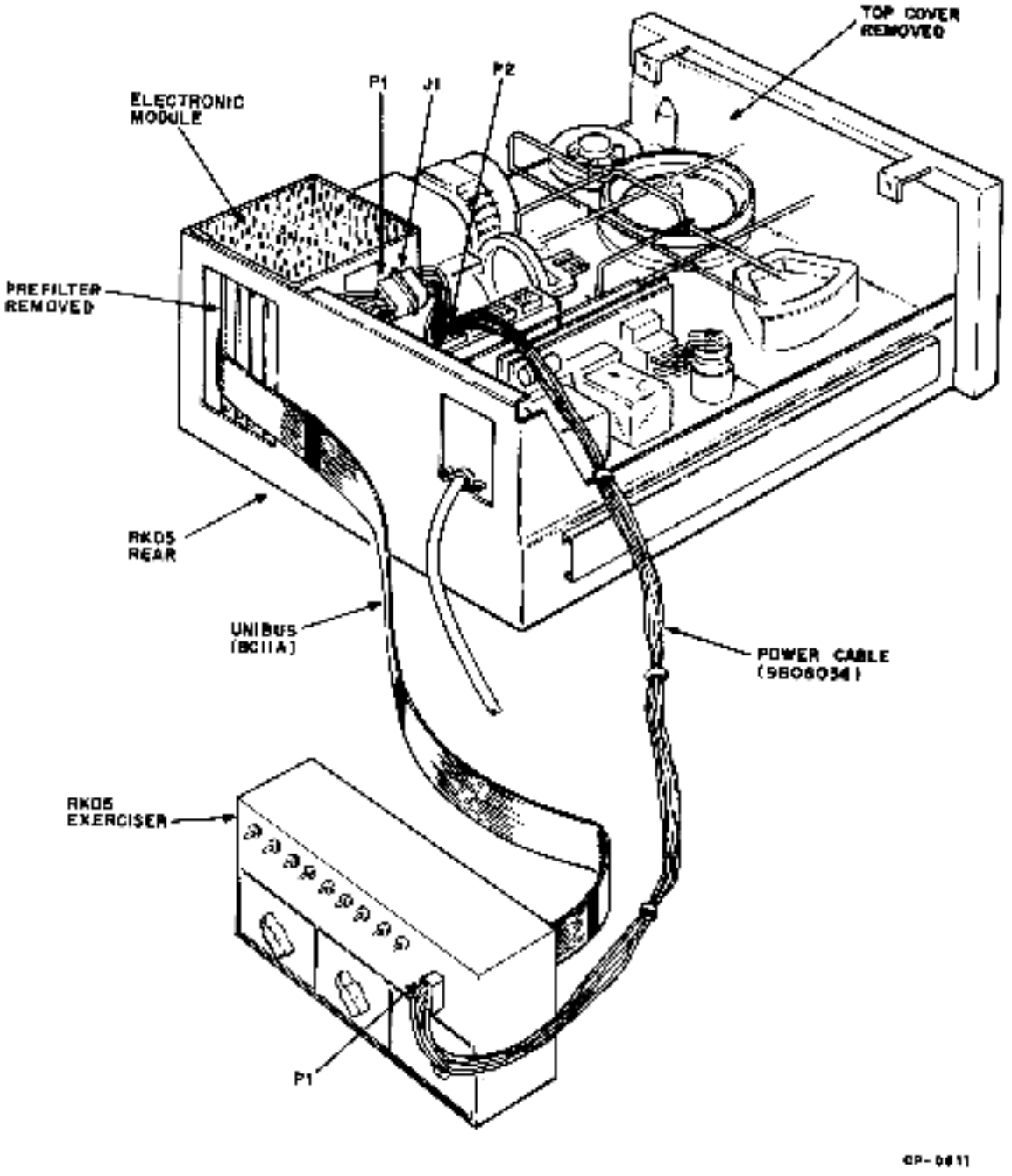

Figure 2-1 Exerciser to RK05 Disk Drive Connection Diagram

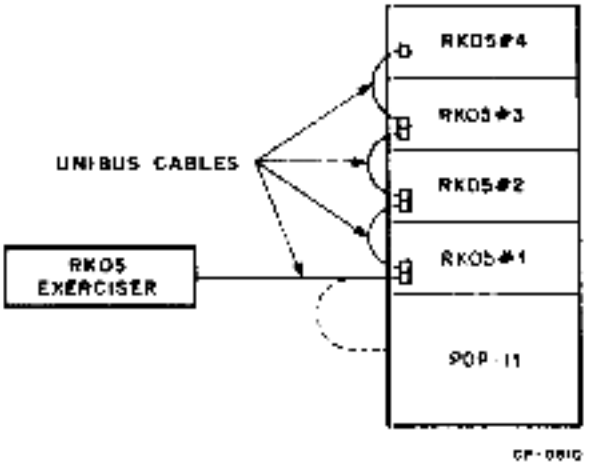

Figure 2-2 RK05 Exerciser to Multiple RK05 Disk Drives Connection Diagram

f. Set the exerciser front panel Write Constant toggle switch to the down position.

CAUTION

The disk drive write circuitry must not be exercised while an alignment disk cartridge is installed in the disk drive as serious damage to the alignment tracks may result. The alignment disk cartridge is identified by a red access door and/or a red label.

g. Apply power to the disk drive(s); observe the disk drive blower motor comes on immediately. After a short delay, the door lock solenoid energizes and the exerciser front panel POWER ON indicator illuminates.

h. Set the disk drive RUN/LOAD switch to LOAD and insert the DECpack.

i. Set the RUN/LOAD switch to RUN; observe the DECpack rotates.

j. Set the exerciser front panel Drive Selector knob to the ID (disk drive identification number) of the disk drive to be exercised.

2.3 ACCEPTANCE TEST PROCEDURE

The exerciser is shipped ready-to-use. If the unit is not operating properly, refer to Chapter 5 (Maintenance) and diagnose and correct the problem. Service should be performed by qualified service personnel only.

To test the exerciser, obtain an RK05 Disk Drive that is known to be operating properly, and set the exerciser up for testing in accordance with the set-up procedure described in Paragraph 2.2. After completing the set-up procedure, perform the following test procedures.

NOTE

If faulty operation is detected at any point in the following procedure, refer to Chapter 5 and correct the fault before proceeding to the next step in the procedure.

2.3.1 Writer Exerciser Module Test Procedure

1. Set the Write Sector knob to "ALL."

2. Set the Head Select-UPPER/LOWER toggle switch to UPPER.

3. Depress the WRITE pushbutton repeatedly; observe the disk drive front panel WT indicator illuminates momentarily each time the WRITE pushbutton is depressed.

4. Set the Constant Write toggle switch to ON; observe the disk drive front panel WT indicator illuminates and does not extinguish until the Constant Write toggle switch is set to the down position.

NOTE

An oscilloscope (Tektronix 453 or equivalent) is required to perform the following steps.

5. Connect channel 1 scope probe to pin B08M2 on the RK05 Disk Drive logic block.

6. Toggle the exerciser Head Select toggle switch up and down; observe a HIGH level signal (+3 V) when the toggle switch is set to LOWER and a LOW level signal when the toggle switch is set to UPPER.

7. Set the oscilloscope controls as follows:

- Vertical
  Mode = **ADD**
  Sensitivity = 1 V/div
  Coupling = dc

- Sweep
  A sweep time = 5 ms/div
  Trigger = Normal

8. Connect the channel 1 probe to B08L2 (WRITE GATE L) on the RK05 Disk Drive logic block.

9. Connect the channel 2 probe to A02R2 (INDEX PULSE) on the RK05 Disk Drive logic block.

10. Set exerciser Constant Write toggle switch to ON.

11. Set the Write Sector knob to 0; observe the display shown in Figure 2-3.

12. Set Write Sector knob to positions 1 through 9; observe the index pulse moves in discrete steps.

NOTE

The index pulse is not visible on the photograph shown in Figure 2-3 due to photographic resolution limitations.

13. Set the oscilloscope controls as follows:

- Vertical
  Mode = Ch 1
  Sensitivity = 1 V/div
  Coupling = dc

- Sweep
  A sweep time = 0.2 μs/div
  Trigger = Normal

14. Set all exerciser Data Bit toggle switches to the 0 position.

15. Connect channel 1 scope probe to A08F2 on RK05 Disk Drive logic block and uncalibrate the scope horizontal sweep to display four negative-going pulses as shown in Figure 2-4a.

16. Set all four Data Bit toggle switches to the 1 position; observe eight negative-going pulses as shown in Figure 2-4b.

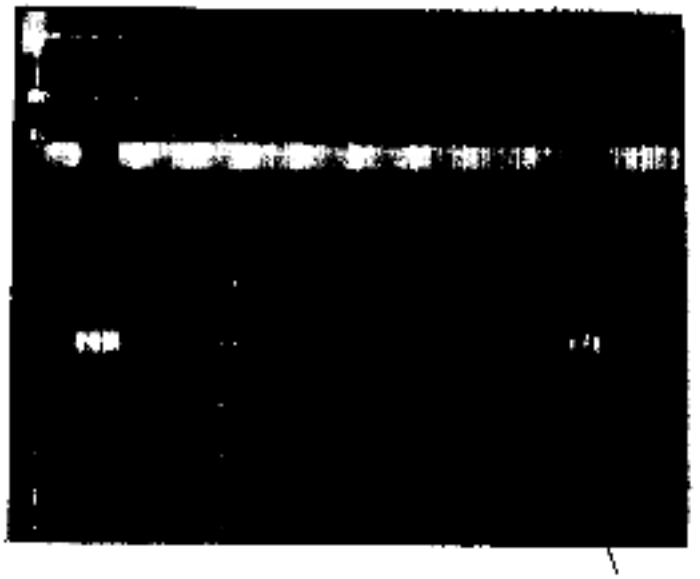

INDEX PULSE APPEARS HERE

Figure 2-3 Write Gate Data Waveform

a. Clock Waveform

b Clock and Data Waveform

Figure 2-4 Writer Exerciser Clock and Data Waveforms

17. Toggle each of the Data Bit toggle switches; observe that each switch controls one of the negative-going pulses.

18. Set the oscilloscope controls as follows:

- Vertical
  Mode = CH 1
  Sensitivity = 0.5 V/div
  Coupling = dc

- Sweep
  A sweep time = 0.5 μs/div
  trigger = normal

19. Connect scope probe to TP3 on card G180 (AB01 in RK05 Disk Drive).

20. Set exerciser RUN switch to the down position.

21. Set exerciser Constant Write and DC Erase toggle switches to the down positions.

22. Set exerciser Write Sector knob to ALL.

23. Set exerciser Head Select toggle switch to UPPER.

24. Depress exerciser WRITE pushbutton; observe data appears on display as shown in Figure 2-5a.

25. Set exerciser Head Select toggle switch to LOWER and depress the WRITE pushbutton; observe data appears as shown in Figure 2-5a.

26. Set the exerciser Head Select toggle switch to UPPER.

27. Set the exerciser DC Erase toggle switch to ON and depress the WRITE pushbutton; observe data is erased completely as shown on Figure 2-5b.

28. Set the exerciser Head Select toggle switch to LOWER; observe data is still present as shown on Figure 2-5a.

29. Depress the exerciser WRITE pushbutton; observe data is erased completely as shown on Figure 2-5b.

30. Repeat steps 23 through 29 for sectors 0–9.

2.3.2 Positioner Exerciser Module Test Procedure

1. Set the Function knob to STEP.

2. Set the FWD/REV switch to FWD.

3. Set the RTZ toggle switch to the down position.

4. Set the RUN switch to the up position; observe the linear positioner moves to ever increasing (inward) cylinder addresses.

5. Set the FWD/REV toggle switch to REV; observe the linear positioner moves to ever decreasing (outward) cylinder addresses.

6. Set all Cylinder Address toggle switches to 0.

7. Set the Function knob to ALT; observe the linear positioner moves back and forth between cylinder address 0 and ever decreasing cylinder addresses.

8. Set the FWD/REV switch to FWD; observe the linear positioner moves back and forth between cylinder address 0 and ever increasing cylinder address.

9. Set the RUN toggle switch to the down position.

10. Set the Function knob to OSC.

11. Set the following Cylinder Address toggle switches to the 1 position: 128, 64, 8, and 2 (cylinder address 202).

12. Momentarily set the RUN toggle switch to the up position; observe the linear positioner moves to cylinder address 202.

NOTE

Refer to Figure 2-6 for instructions on reading the vernier.

13. Set Cylinder Address toggle switch 1, 4, 16, or 32 to the 1 position.

14. Set the RUN toggle switch to the up position; observe the exerciser ADDR INV (address invalid) indicator illuminates.

a. Write Data Waveform

b Erase Data Waveform

Figure 2-5 Write Data Waveforms

15. Set the RUN toggle switch to the down position and set all Cylinder Address toggle switches to 0.

16. Set Cylinder Address toggle switch 128 to 1 and momentarily set the RUN toggle switch to the up position; observe the linear positioner moves to cylinder address 128.

17. Repeat steps 15 and 16 using each of the remaining Cylinder Address toggle switches.

18. Set the RUN toggle switch to the up position and set the Function knob to RAND; observe the linear positioner moves to random cylinder addresses.

19. Put the RK05 Disk Drive servo amp switch (located to the left of the positioner assembly) to the down position; observe the exerciser SEEK INC (Seek Incomplete) indicator illuminates. Return the servo amp switch to the up position

20. Set the RTZ toggle switch to the up position; observe the linear positioner moves to cylinder address 0 and stops.

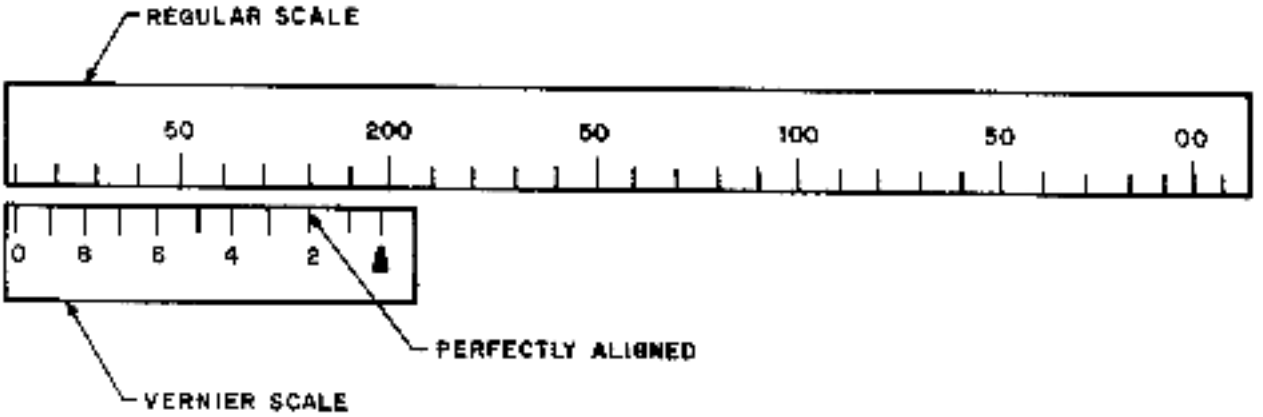

TO READ A VERNIER, proceed
As follows:

a. Determine the whole number value of the nearest regular scale marking to the right of Vernier scale triangle (A).

b. Add that value to the value of the vernier scale marking that aligns perfectly with a regular scale marking.

c. In the illustration shown above the vernier reading is:

Regular Scale Marking	=	200
Vernier Marking	=	2
Vernier Reading	=	202

OP-0808

Figure 2-6 How to Read a Vernier

CHAPTER 3
OPERATION

3.1 SCOPE

This chapter covers complete operation of the exerciser and includes a description of front panel controls and indicators and modes of operation and a utilization procedure.

3.2 CONTROLS AND INDICATORS

The RK05 Exerciser front panel (Figure 3-1) controls and indicators can be functionally separated into two categories: writer exerciser controls and positioner exerciser controls and indicators. The writer exerciser controls directly control the writer exerciser logic and enable manual selection of the upper or lower disk drive read/write head. The positioner exerciser controls and indicators directly control the positioner exerciser logic and monitor disk drive fault lines and +15 V input power. The front panel drive selector knob selects the ID of the disk drive to be exercised. Figure 3-1 shows the exerciser front panel, and Table 3-1 provides a complete description of each control and indicator.

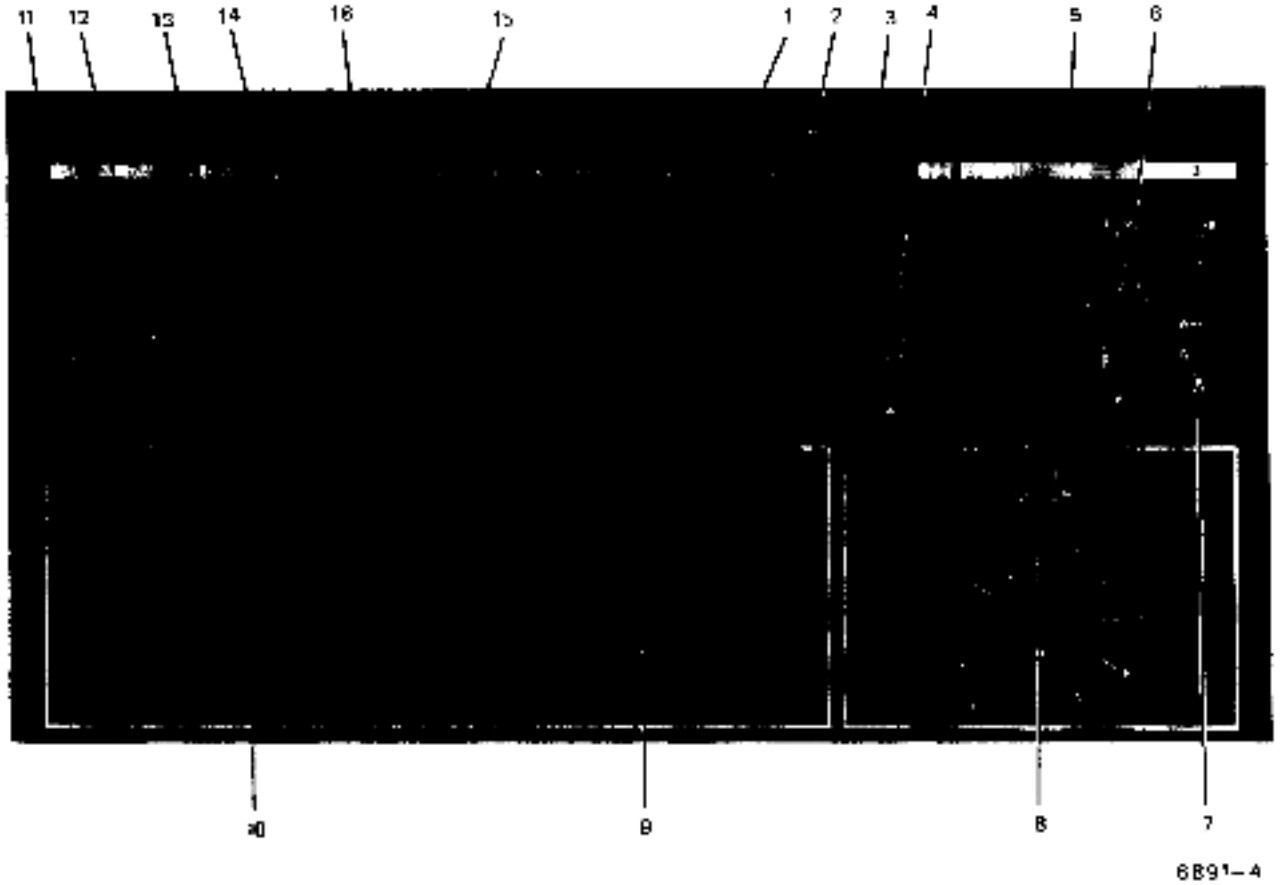

Figure 3-1 RK05 Exerciser Front Panel Controls and Indicators

Table 3-1
Exerciser Controls and Indicators

Item	Description	Function
1	**POWER** ON indicator	Illuminates when +15 V input power is present.
2	Constant Write-ON toggle switch	Enables the writer exerciser logic to perform repeated write operations on the selected sector.
3	DC Erase-ON toggle switch	Places a constant **HIGH** on the writer exerciser logic clock and data output line, thus erasing the selected sector.
4	4-Pin Connector	Input power connector, connects to RK05 Disk Driver power supply via the power cable.
5	Data Bits toggle switches	Enable manual selection of data bits output to the disk drive by the writer exerciser logic.
6	Head Select-UPPER/LOWER toggle switch	Selects read/write head at the selected RK05 Disk Drive.
7	**WRITE** pushbutton	Enables the writer exerciser logic to perform a single write operation on sectors 0–9 or all sectors
8	Write Sector Knob	Selects sectors 0–9 or all sectors for writing by the writer exerciser logic.
9	Drive Sector Knob	Selects ID of disk drive to be exercised (switch output goes directly to disk drive).
10	Function Knob	Selects one of four position exerciser modes of operation: a Step b. Alternate c Oscillate d Random (See Paragraph 1.3 for a complete description of modes of operation.)
11	RUN toggle switch	Enables the positioner exerciser to perform a position operation each time the disk drive enters the ready state, i.e., **R/W/S READY L** asserts.

Table 3-1 (Cont)
Exerciser Controls and Indicators

Item	Description	Function
12	RTZ toggle switch	Clears the address counter to a count of 0, extinguishes the ADDR INV indicator if illuminated and asserts the RESTORE L output to disk drive. RESTORE L initiates a restore operation in the disk drive.
13	FWD/REV toggle switch	Enables the address counter to count up (FWD) or count down (REV).
14	ADDR INV indicator	Illuminates when the BUS ADDRESS INVALID L input line asserts. The disk drive asserts the BUS ADDRESS INVALID L line when the cylinder address is considered to be greater than 202.
15	SEEK INC indicator	Illuminates when the BUS SEEK INCOMPLETE input line asserts. The disk drive asserts BUS SEEK INCOMPLETE when the seek operation is not completed.
16	Cylinder Address - 1, 2, 4, 8, 16, 32, 64, 128 toggle switches	Enables manual selection of cylinder address for use in the alternate and oscillate modes.

3.3 MODES OF OPERATION

The positioner exerciser logic operates in four different modes selectable via the Function knob.

3.3.1 Step Mode

In the step mode of operation consecutive cylinder addresses are provided to the disk drive. An address counter internal to the positioner exerciser logic is the source of the consecutive addresses. If the FWD/REV switch is set to FWD, the address counter starts at whatever count it contained when the step mode was selected and increments by one after each cylinder seek operation is completed. When cylinder address 202 is reached, the address counter is cleared to a count of 0 and continues to increment by 1. If the FWD/REV switch is set to REV, the address counter decrements by 1 after each cylinder seek operation; when a count of minus 1 is reached, the address counter is loaded to a count of 202 and the process continues.

Thus, in the step mode the positioner exerciser will generate all 203 cylinder addresses (0—202) consecutively and gate them out to the disk drive.

3.3.2 Alternate Mode

In the alternate mode of operation, the positioner exerciser alternately selects the front panel Cylinder Address switches and internal address counter as the source of the cylinder address. The Cylinder Address switches are controlled manually by the operator and are normally set to address 0. However, these switches may be set to any address at the operator's discretion. If the FWD/REV switch is set to FWD, the internal address counter will increment by 1 each time the address counter is selected as the source of the cylinder address, i.e., on alternate cylinder seek operations. When the counter reaches a count of 202, it is cleared to 0 and the process continues.

3.3.3 Oscillate Mode

The oscillate mode is similar to the alternate mode in that the positioner exerciser logic alternately selects the cylinder address switches and the internal address counter as the source of the cylinder address. In the oscillate mode, however, the internal address counter is held to a count of 0. Hence the cylinder seek operations oscillate back and forth between the contents of the manually controlled cylinder address switches and 0.

3.3.4 Random Mode

In the random mode, pseudo random cylinder addresses provided by the internal address counter are gated out to the disk drive. An internal clock referred to as the fast clock is enabled in this mode which increments/decrements the address counter until a strobe occurs. When the strobe occurs the fast clock is shut off, the contents of the address counter is used to perform a seek operation, and the counter is incremented/decremented by 1. The fast clock is then enabled again and the process is repeated. If the FWD/REV switch is set to FWD, the cylinder address of each successive cylinder seek operation is greater than that of the previous operation until a count of 202 is reached. At a count of 202, the counter is cleared and the process continues. If the FWD/REV switch is set to REV, the cylinder address of each successive cylinder seek operation is less than the previous operation until a count of minus 1 is reached. At a count of minus 1, the counter is loaded to a count of 202 and the process continues.

3.4 UTILIZATION PROCEDURE

To exercise the RK05 Disk Drive, set up the exerciser and disk drive per Paragraph 2.2 and perform the following operating procedures (Table 3-2).

CAUTION

DO NOT attempt to exercise the disk drive write circuitry with an alignment disk cartridge installed in the disk drive as serious damage to the alignment tracks may result. The alignment disk cartridge is identified by a red access door and/or a red label.

Table 3-2
Exerciser Operating Procedure

Procedure	Indication
1. To position the read/write heads to a particular cylinder:	
a. Set the RTZ and RUN toggle switches to the down position.	
b. Set the Function knob to OSC.	
c. Set the Cylinder Address toggle switches to the desired cylinder address (0–202).	
d. Quickly toggle the RUN toggle switch to RUN and off; repeat until positioner stops at the selected cylinder.	Observe the linear positioner moves to the selected cylinder and stops.
2. To position the read/write heads to ever increasing cylinder addresses:	
a. Set the FWD/REV toggle switch to FWD.	
b. Set the Function knob to STEP.	
c. Set the RUN toggle switch to RUN.	Observe the linear positioner moves to ever increasing cylinder addresses.

Table 3-2 (Cont)
Exerciser Operating Procedure

Procedure	Indication
3. To position the read/write heads to ever decreasing cylinder addresses:	
a. Set the function knob to STEP.	
b. Set the FWD/REV toggle switch to REV.	
c. Set the RUN toggle switch to RUN.	Observe the linear positioner moves to ever decreasing cylinder address.
4. To alternately position the read/write heads to a selected cylinder address and ever increasing cylinder addresses:	
a. Set the RTZ and RUN toggle switches to the down position.	
b. Set the Function knob to ALT.	
c. Set the Cylinder Address toggle switches to the desired cylinder addresses (0– 202).	
d. Set the FWD/REV switch to FWD.	
e. Set the RUN toggle switch to RUN.	Observe the linear positioner moves back and forth between the selected cylinder address and ever increasing cylinder addresses. When the increasing cylinder addresses reach 202, the positioner moves directly to cylinder address 0 and the process continues.
5. To alternately position the read/write heads to a selected cylinder address and ever decreasing cylinder addresses:	
a. Perform steps 4a through 4c	
b. Set the FWD/REV switch to REV.	
c. Set the RUN toggle switch to RUN.	Observe the linear positioner moves back and forth between the selected cylinder address and ever decreasing cylinder addresses. When the decreasing cylinder addresses reach 0, the positioner moves directly to cylinder address 202 and the process continues.

Table 3-2 (Cont)
Exerciser Operating Procedure

Procedure	Indication
6. To oscillate the read/write heads back and forth between a selected cylinder address and cylinder address 0:	
a. Set the RTZ and RUN toggle switches to the down position.	
b. Set the Function knob to OSC.	
c. Set the Cylinder Address toggle switches to the desired cylinder address (0 202).	
d. Set the RUN toggle switch to RUN.	Observe the linear positioner oscillates back and forth between cylinder address 0 and the selected cylinder address. **NOTE** **If the Cylinder Address switches are set to address 0, the linear positioner will not move.**
7. To randomly position the read/write heads to many different cylinder addresses:	
a. Set the RTZ and RUN toggle switches to the down position.	
b. Set the Function switch to RAND.	
c. Set the RUN toggle switch to RUN.	Observe the linear positioner moves randomly
8. To move the read/write heads to cylinder address 0, set the RTZ switch to RTZ.	Observe the linear positioner moves to cylinder address 0 and stops.

Table 3-2 (Cont)
Exerciser Operating Procedure

Procedure	Indication
9. To continuously write all sectors on a particular cylinder:	
a. Set all toggle switches to the down position.	
b. Set the Function knob to OSC.	
c. Position the Cylinder Address toggle switches to the desired cylinder address (0–202).	
d. Quickly toggle the RUN toggle switch to RUN and off. Repeat until positioner stops at the selected cylinder	Observe the linear position moves to the selected cylinder and stops.
e. Set the Head Select – UPPER/LOWER toggle switch to the desired position.	
f. Set the Data Bits toggle switch to the desired data configuration (Table 3-3).	
g. Set the Write Sector knob to ALL.	
h. Set the Constant Write toggle switch to ON.	
10. To write all sectors on a particular cylinder only once:	
a. Perform steps 9a through 9g	
b. Depress the WRITE pushbutton.	
11. To write a particular sector on a particular cylinder continuously:	
a. Perform steps 9a through 9f.	
b. Set the Write Sector knob to the desired sector.	
c. Set the Constant Write toggle switch to ON.	
12. To write a particular sector on a particular cylinder only once:	
a. Perform steps 9a through 9g	
b. Set the Write Sector knob to the desired sector.	
c. Depress the WRITE pushbutton.	

Table 3-2 (Cont)
Exerciser Operating Procedure

Procedure	Indication
13. To erase all sectors on a particular cylinder:	
a. Perform steps 9a through 9e.	
b. Set the Write Sector knob to ALL.	
c. Set the DC Erase toggle switch to ON.	
d. Depress the WRITE pushbutton.	
14. To erase a particular sector on a particular cylinder:	
a. Perform steps 9a through 9c.	
b. Set the Write Sector knob to the desired sector.	
c. Set the DC Erase toggle switch to ON.	
d. Depress the WRITE pushbutton.	

Table 3-3
Data Bits Switch to Data Bit Correlation

Data Bits Switch	Data Bit Selected
0	0, 4, 8, 12*
1	1, 5, 9, 13*
2	2, 6, 10, 14*
3	3, 7, 11, 15*

*Bits 12, 13, 14, 15 are written only on 12 sector disk packs.

CHAPTER 4
THEORY OF OPERATION

4.1 SCOPE

This chapter provides a detailed description of the RK05 Exerciser. The description is provided in three parts: a functional description, a detailed logic description, and a flow diagram description.

4.2 FUNCTIONAL DESCRIPTION

Functionally, the exerciser circuitry can be separated into two logic sections: the writer exerciser and the positioner exerciser. The writer exerciser monitors the disk drive sector counter and BUS INDEX lines and generates control and data signals to exercise the disk drive write circuitry. The positioner exerciser monitors the disk drive R/W/S READY (Read/Write/Seek Ready) line and fault lines and generates control signals and cylinder addresses to exercise the disk drive linear positioner circuitry.

4.2.1 Writer Exerciser

As illustrated in Figure 4-1, the writer exerciser is separated into four functional logic blocks: the sector decoder, the write control logic, the write clock, and the clock and data output multiplexer.

4.2.1.1 Sector Decoder – The sector decoder decodes the sector counter inputs from the disk drive and asserts one of ten sector select lines (0–9) to the front panel Write Sector switch. The disk drive continually updates the sector counter inputs to indicate the sector currently passing under the read/write heads. When the sector select line asserted corresponds to the position of the Write Sector switch, the WRITE GATE ENABLE line asserts.

4.2.1.2 Write Control Logic – The Write Control logic monitors the front panel Constant Write and WRITE switches and the disk drive BUS INDEX signal and enables or disables the write clock and the disk drive write circuitry accordingly.

If the Constant Write toggle switch is set to ON, the WRITE ENABLE line is constantly asserted thereby enabling the write clock to run continuously. The BUS WRITE GATE line then asserts whenever the WRITE GATE ENABLE line asserts. Thus, in the constant write mode, the BUS INDEX signal has no effect and the selected sector is written each time it passes under the read/write head.

If the Constant Write toggle switch is set to off (down) and the WRITE pushbutton is depressed, the first BUS INDEX pulse causes the WRITE ENABLE line to assert. The BUS WRITE GATE line will then follow the state of the WRITE GATE ENABLE line. After one revolution of the disk another BUS INDEX pulse occurs and clears the WRITE ENABLE and BUS WRITE GATE lines. Thus, the write clock is enabled for one revolution of the disk only and the selected sector is written only once.

4.2.1.3 Write Clock – When enabled, the write clock generates the clock pulses and control signals necessary to gate the clock pulses and data bits through the multiplexer.

4.2.1.4 Clock and Data Output Multiplexer – The clock and data multiplexer converts parallel data bit inputs from front panel Data Bits toggle switches into a serial data output and frames each data bit with clock pulses. Setting the front panel DC Erase toggle switch to ON causes a constant HIGH to be output on the BUS WRITE DATA AND CLOCK line thereby erasing the selected sector.

4.2.1.5 Head Select Switch – The output from the front panel Head Select switch selects either the upper or lower read/write head in the disk drive.

4.2.2 Positioner Exerciser

As illustrated in Figure 4-1, the positioner exerciser is separated into five functional logic blocks: the strobe oscillator, the address counter control logic, the address counter, the cylinder address source select logic, and the fault detect logic.

4.2.2.1 Strobe Oscillator – The strobe oscillator monitors the front panel RUN switch and the R/W/S READY line from the disk drive and, when enabled, generates strobes to the address counter control logic, the cylinder address source select logic, and the disk drive. If the RUN switch is set to the down position, the strobe oscillator is disabled. Setting the switch to the up position conditions the strobe oscillator such that any assertion of the R/W/S READY input activates the oscillator.

4.2.2.2 Address Counter Control Logic – The address counter control logic, monitors the front panel Function and FWD/REV switches, and controls the operation of the address counter accordingly. The Function switch selects one of four operating modes and the FWD/REV switch determines whether the address counter will be incremented or decremented. Note that setting the RTZ switch to the up position overrides all other inputs to the address counter control logic by clearing and holding the address counter to a count of 0 and asserting the BUS RESTORE line to the disk drive. The following paragraphs describe the operation of the address counter control logic in each of the four modes.

4.2.2.2.1 Step Mode – In this mode the STEP input to the Cylinder Address source select logic asserts and causes ADDR CNTR SEL to assert. When the strobe oscillator generates a strobe, the ADDR CNTR BITS (0–7) are gated through the cylinder address source select logic and strobed into the disk drive. The disk drive linear positioner then performs a seek operation to the cylinder address indicated. If the front panel FWD/REV switch is set to FWD, the COUNT UP line then asserts and increments the address counter by 1. When the next strobe occurs, the ADDR CNTR BITS (0–7) are gated out again and the counter is incremented by 1. This continues until the counter reaches a count of 202. At a count of 202, the 202 DETECT line asserts, the counter is cleared to a count of 0, and the process continues. If the FWD/REV switch is set to REV, a strobe causes the COUNT DOWN line to assert decrementing the counter by 1 and upon reaching a count of minus 1, the counter is loaded to a count of 202. Thus, in the step mode, the disk drive performs seek operation to ever increasing or decreasing consecutive cylinder addresses.

4.2.2.2.2 Alternate Mode – In this mode, the ADDR CNTR SEL line asserts only on alternate strobes, causing the ADDR CNTR BITS (0–7) to be gated out to the disk drive and enabling the address counter to be incremented or decremented by 1. Thus, in the alternate mode, the disk drive linear positioner performs seek operations alternately to the cylinder address contained in the front panel Cylinder Address switches and the address counter. Note that the Cylinder Address switches provide a fixed address while the address counter provides an ever increasing or decreasing address.

4.2.2.2.3 Oscillate Mode – In this mode, like the alternate mode, the ADDR CNTR SEL line asserts on alternate strobes. However, in the oscillate mode, the OSC line asserts causing the address counter control logic to assert the CLEAR line which clears the address counter to 0 and holds it there. Thus, in the oscillate mode, the disk drive linear positioner performs seek operations alternately to the cylinder address contained in the front panel Cylinder Address switches, which may be set to any address from 0 to 202, and the address counter, which is held to address 0.

4.2.2.2.4 Random Mode – In this mode, the STEP and RANDOM lines assert. The assertion of STEP causes ADDR CNTR SEL to assert, therefore, as in the step mode, each occurrence of a strobe in the random mode causes the ADDR CNTR BITS (0–7) to be gated out to the disk drive and the address counter to be incremented or decremented by 1. The random mode differs from the step mode, however, in that the assertion of the RANDOM line enables a fast clock internal to the address counter control logic. The fast clock increments or decrements the address counter between strobes. Hence, the cylinder addresses output to the disk drive are not consecutive, but rather, differ by varying amounts depending on the elapsed time between strobes. As a result, the seek operations performed by the disk drive linear positioner are pseudo-random.

4.2.2.3 Address Counter – The address counter outputs the ADDR CNTR BITS (0–7) to the cylinder address source select logic and asserts the NEQ 1 DETECT and 202 DETECT lines whenever those counts are reached. The inputs to the address counter from the address counter control logic enable the counter to be incremented by 1 from 0 to 202, decremented by 1 from 202 to 0, cleared to a count of 0 and loaded to a count of 202.

4.2.2.4 Cylinder Address Source Select Logic – The cylinder address source select logic monitors the front panel Function switch and selects either the front panel Cylinder Address switches or the address counter as the source of the cylinder address accordingly. If the Function switch is set to ALT or OSC, the STEP input is cleared and the strobe input alternately selects the address counter input and Cylinder Address switch input as the cylinder addresses source. If the Function switch is set to STEP or RAND, however, the STEP input asserts and the address counter input is constantly selected as the cylinder address source and the strobe input has no effect.

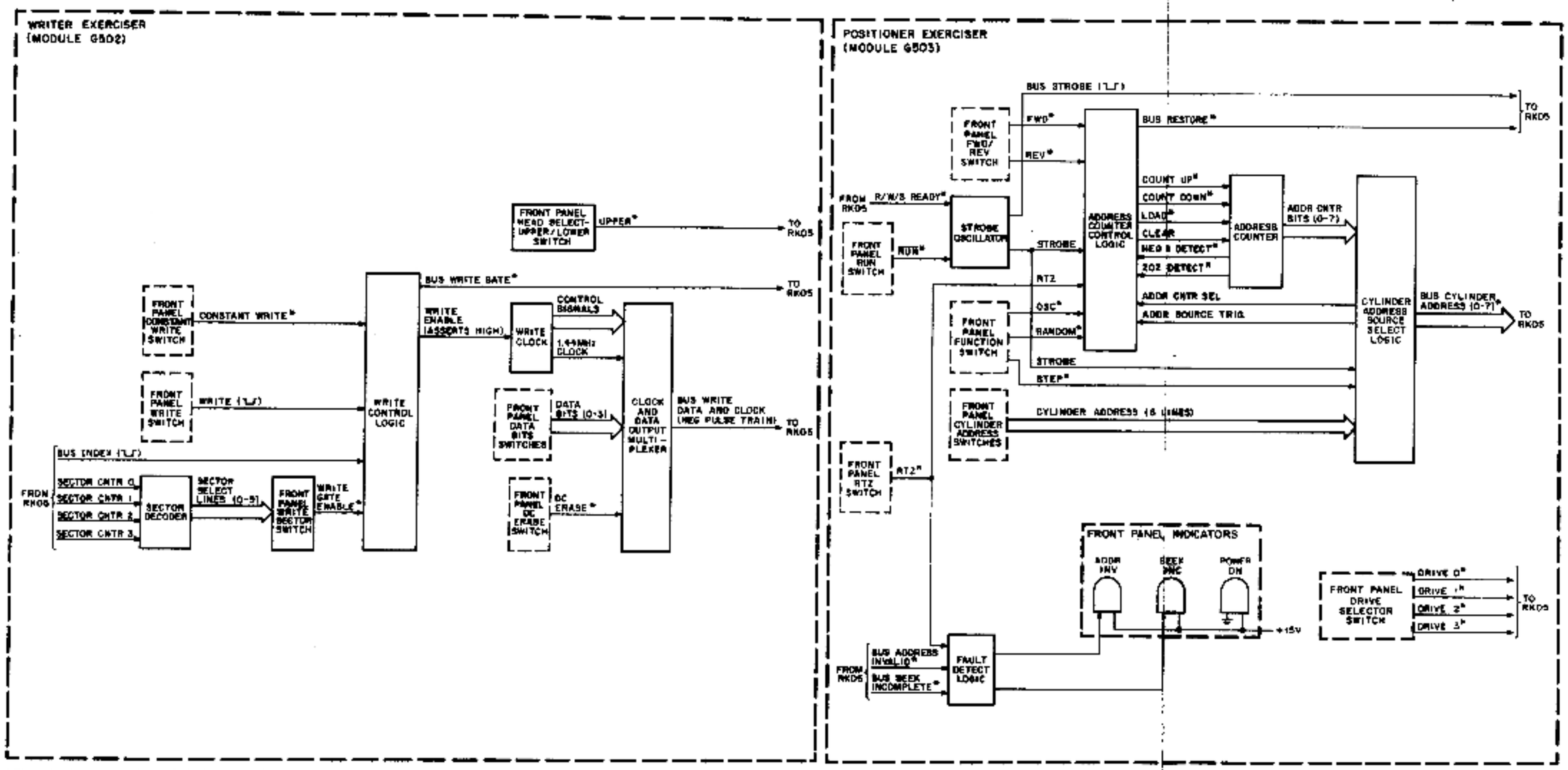

* These signals are a logical low (0V) when asserted.

Figure 4-1 RK05 Exerciser Functional Block Diagram

4.2.2.5 Fault Detect Logic – The fault detect logic monitors the BUS ADDRESS INVALID and BUS SEEK INCOMPLETE inputs from the disk drive and lights the corresponding front panel indicator when either of the lines asserts. Assertion of the RTZ line causes the ADDR INV indicator to extinguish.

4.3 DETAILED LOGIC DESCRIPTION

The following paragraphs provide a detailed logic level description of each of the functional blocks shown in Figure 4-1.

4.3.1 Writer Exerciser

4.3.1.1 Sector Decoder and Write Sector Switch – The sector decoder (Figure 4-2) decodes the SECTOR CNTR (0–3) inputs and asserts one of ten lines to the Write Sector switch. When the sector decoded corresponds to the position of the Write Sector switch, the WRITE GATE ENABLE L line asserts. If the Write Sector switch is set to ALL, WRITE GATE ENABLE L is always asserted.

4.3.1.2 Write Control Logic – The write control logic (Figure 4-3) enables the disk drive to write the selected sector once or repeatedly. Setting the Constant Write switch to ON asserts CONSTANT WRITE L which sets the Write Gate flip-flop, thereby enabling the write clock and conditioning the bus write AND gate. Under these conditions, the write clock runs constantly and the BUS WRITE GATE L line asserts each time WRITE GATE ENABLE L asserts, i.e., each time the selected sector passes under the read/write heads. Setting the Constant Write switch to off (down) and depressing the WRITE pushbutton clears CONSTANT WRITE L and asserts WRITE L, which sets the Write Latch. When the bus index pulse occurs (the bus index pulse occurs once per disk revolution), the positive-going edge sets the Enable Write Gate flip-flop, which in turn sets the Write Gate flip-flop thus enabling the write clock and conditioning the bus write AND gate. BUS WRITE GATE L then asserts when the selected sector passes under the read/write heads and immediately thereafter the selected sector is written. The very next bus index pulse then resets the Write Gate flip-flop on its negative-going edge. Note that releasing the WRITE pushbutton clears the Write Latch and resets the Enable Write Gate flip-flop.

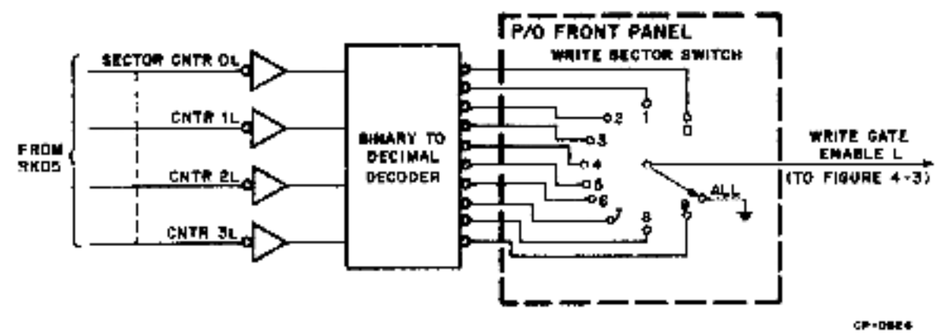

Figure 4-2 Sector Decoder and Write Section Switch Diagram

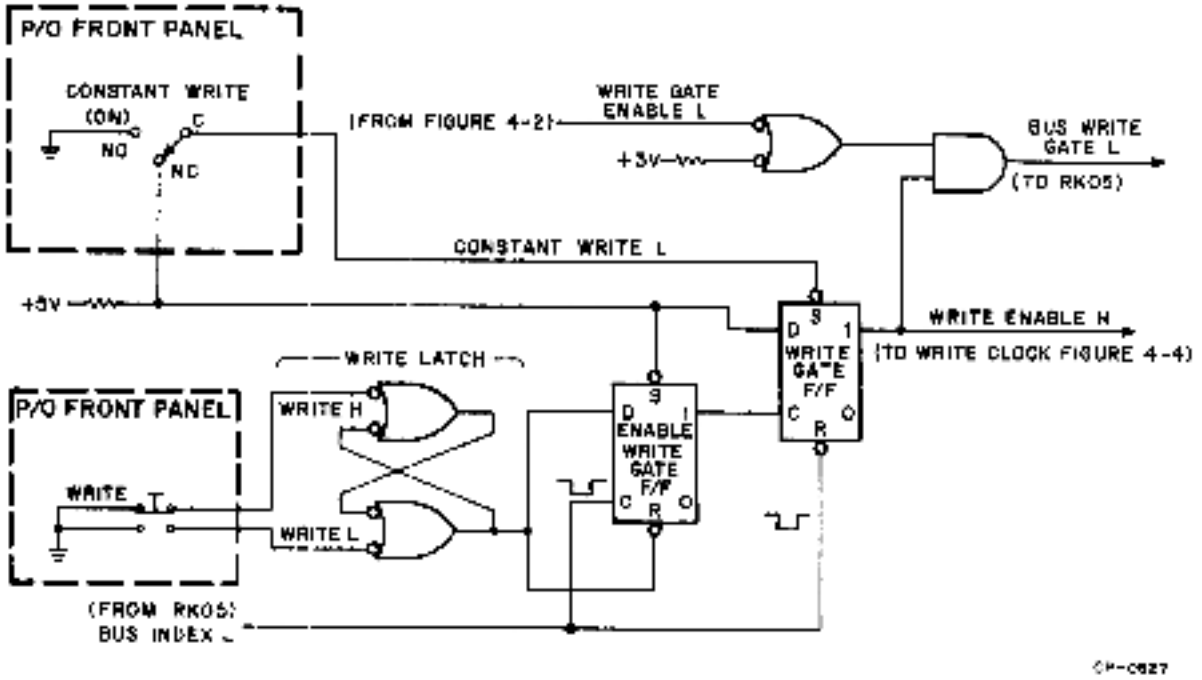

Figure 4-3 Write Control Logic

4.3.1.3 Write Clock – The write clock generates the clock pulses and control signals necessary to gate clock pulses and data bits through the clock and data multiplexer (Figure 4-4). See timing diagram (Figure 4-5) for logic operation. Note that the clock runs as long as **WRITE ENABLE H** is asserted.

4.3.1.4 Clock and Data Output Multiplexer – The clock and data output multiplexer serially outputs the clock pulses and data bits such that each data bit is preceded and succeeded by a clock pulse (Figure 4-6). Referring to Figure 4-5, note that the initial clock pulse is generated on the first assertion of **CLOCK H**. On the second assertion of **CLOCK H**, 1 L is cleared and the bit 0 AND gate is satisfied, gating bit 0 on to the output line. On the third assertion of **CLOCK H**, 1 L is asserted again generating a second clock pulse and so on.

4.3.2 Positioner Exerciser

4.3.2.1 Strobe Oscillator – The strobe oscillator (Figure 4-7) generates strobes which are used internally and are also output to the disk drive to gate in the cylinder address. Setting the front panel RUN switch to the up position clears the $\overline{\text{RUN}}$ L line. When the disk drive is ready to execute another operation, the **R/W/S READY L** line asserts, turning the input driver off. With the driver off, the capacitor charges until the UJT (unijunction transistor) conducts, discharging the capacitor and generating a positive-going pulse which is inverted by the output inverter asserting **STROBE L**. The negative-going pulse output turns the output driver on, asserting **BUS STROBE L**. In response to **BUS STROBE L**, the disk drive initiates a seek operation and clears the **R/W/S READY L** input.

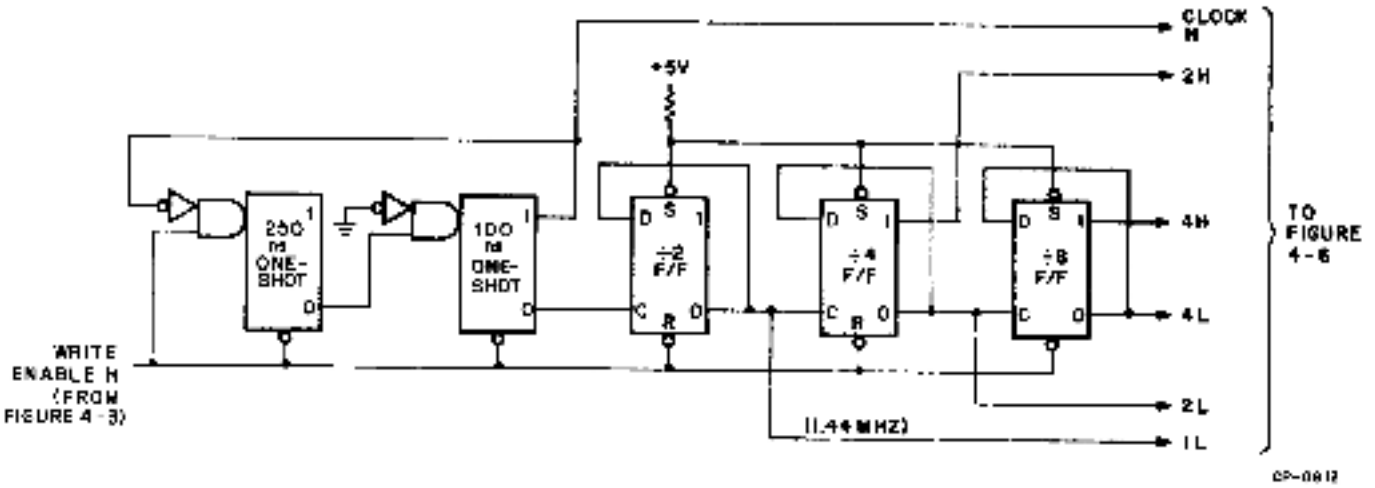

Figure 4-4 Write Clock

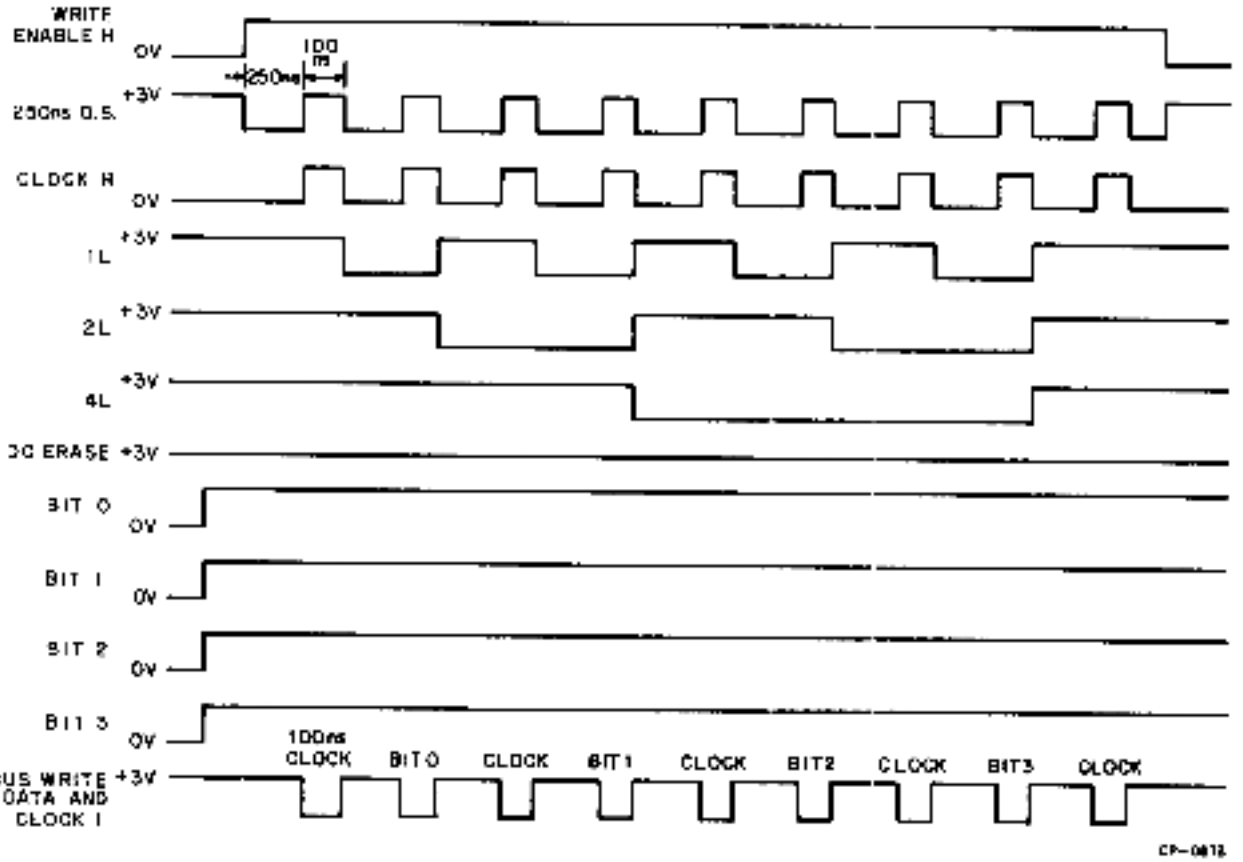

Figure 4-5 Write Clock and Multiplexer Timing Diagram

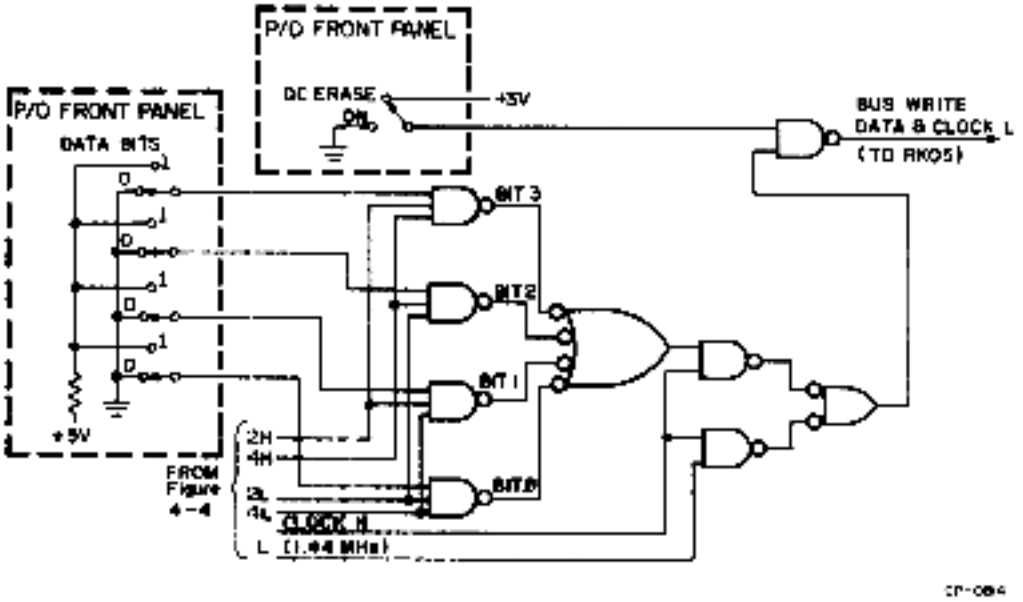

Figure 4-6 Clock and Data Multiplexer Logic

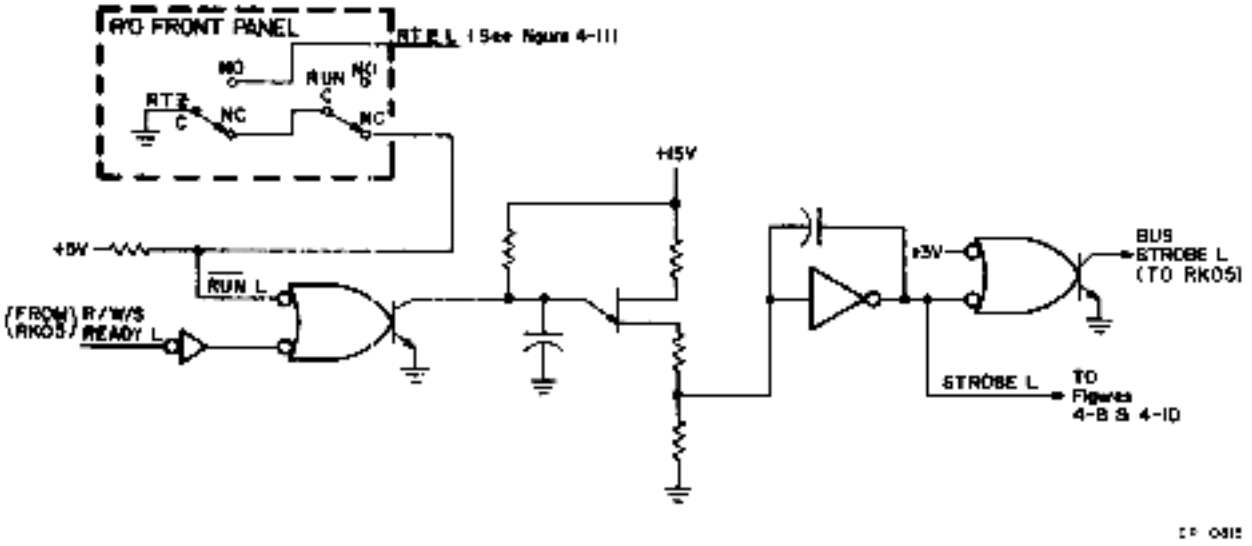

Figure 4-7 Strobe Oscillator

4.3.2.2 Address Counter Control Logic — The address counter control logic (Figure 4-8) monitors the front panel switches and manipulates the address counter in accordance with the mode of operation selected:

a. Step Mode — If the step mode is selected and the FWD/REV switch is set to FWD, the ADDR CNTR SEL H line asserts (Paragraph 4.3.2.4 b), FWD L asserts, and REV L clears (goes HIGH). When the strobe oscillator outputs STROBE L, the count trigger one-shot triggers asserting COUNT UP L which increments the counter by 1 and ADDR SOURCE TRIG L asserts (Paragraph 4.3.2.4 b) and clears the Load/Clear flip-flop. This has no effect on the fast clock driver because RANDOM L is cleared holding the driver ON thereby disabling the fast clock. Therefore, in the step mode, successive strobes gate the count of the address counter to the disk drive and increment the counter until a count of 202 is detected. At a count of 202, the Load/Clear flip-flop is set, asserting CLEAR H which clears the counter to a count of 0. The very next strobe then asserts ADDR SOURCE TRIG L, clearing the Load/Clear flip-flop and incrementing the counter to a count of 1 and so on.

b. Alternate Mode — If the alternate mode is selected and the FWD/REV switch is set to the REV position, the ADDR CNTR SEL H line clears on the first strobe thereby preventing the counter from being decremented. The first strobe also asserts ADDR SOURCE TRIG L which clears the Load/Clear flip-flop but does not affect the fast clock. On the second strobe, ADDR CNTR SEL H asserts causing COUNT DOWN L to assert decrementing the counter by 1. On the third strobe, ADDR CNTR SEL H clears hence the counter is only decremented on alternate strobes. When the counter reaches a count of minus 1, the Load/Clear flip-flop is set and LOAD L asserts, loading a count of 202 into the counter. The very next strobe asserts ADDR SOURCE TRIG L, clearing the Load/Clear flip-flop.

c. Oscillate Mode — If the oscillate mode is selected, OSC L is asserted clearing the counter to a count of 0 and holding it there.

d. Random Mode — If the random mode is selected and the FWD/REV switch is set to FWD, the ADDR CNTR SEL H line asserts immediately and RANDOM L asserts, turning the fast clock driver off enabling the fast clock. The fast clock then outputs clock pulses which increment the counter and reset the Load/Clear flip-flop. When the first strobe occurs, ADDR SOURCE TRIG L asserts turning the fast clock driver on thereby inhibiting the fast clock pulses. The count trigger one-shot also triggers on the first strobe, incrementing the counter by 1. When ADDR SOURCE TRIG L clears, the fast clock starts incrementing the counter again. When the counter reaches a count of 202, the 202 DETECT L line asserts and the counter is cleared to a count of 0. Thus, in the random mode, the fast clock increments the counter until a strobe occurs; the strobe gates the count to the disk drive and increments the counter by 1. The fast clock then starts again and increments the counter until another strobe occurs. As a result, successive cylinder address outputs to the disk drive appear to be randomly selected.

Note that the assertion of RTZ L clears and holds the counter to a count of 0 and asserts BUS RESTORE L.

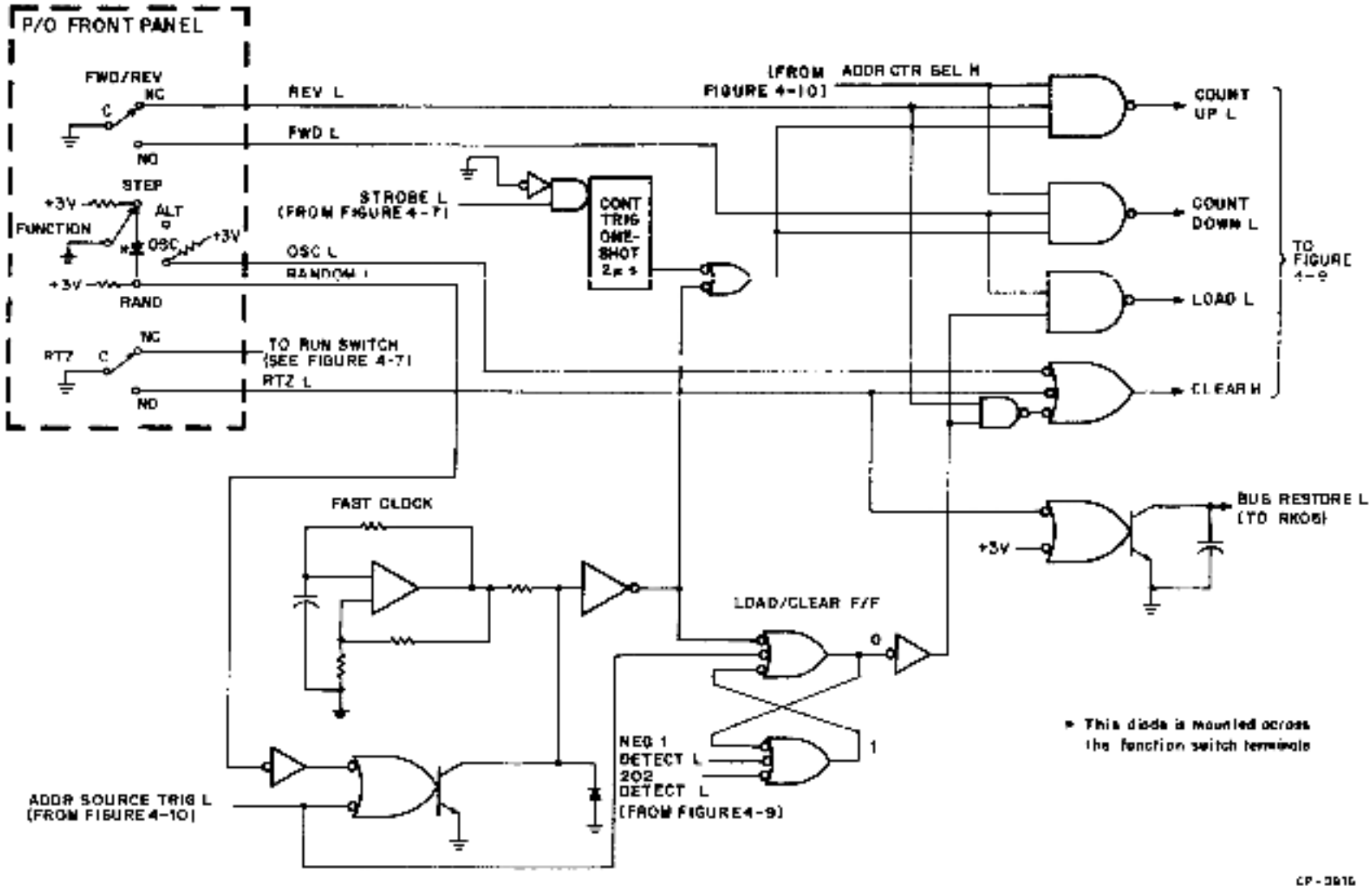

Figure 4-8 Address Counter Control Logic

4.3.2.3 Address Counter – The address counter (Figure 4-9) can count up from 0 to 202 and count down from 202 to minus 1. When the **CLEAR H** input asserts, the counter clears to a count of 0. When the **LOAD L** input asserts, the counter sets to a count of 202. When the counter reaches a count of 202 or minus 1, the respective count detect line asserts.

4.3.2.4 Cylinder Address Source Select Logic – The cylinder address source logic (Figure 4-10) monitors the front panel Function switch and selects the cylinder address source in accordance with the mode of operation selected:

a. Alternate and Oscillate Modes – In these modes, the strobe input to the address source select logic alternately selects the cylinder address switch inputs and the address counter inputs. If the Address Source flip-flop is reset when the first strobe occurs, the 4 μs one-shot triggers asserting **ADDR SOURCE TRIG L** which sets the Address Source flip-flop, thereby asserting **SWITCH ADDR SEL H**. The assertion of **SWITCH ADDR SEL H** selects the front panel Cylinder Address switch inputs. When the second strobe occurs, the 4 μs one-shot triggers again but this time the Address Source flip-flop resets because the D-input to the flip-flop is low. Thus, the **ADDR CNTR SEL H** line asserts and selects the address counter inputs.

b. Step and Random Mode – In these modes, the STEP L input to the Cylinder Address source select logic is a constant LOW, holding the Address Source flip-flop in the reset state. Thus, the **ADDR CNTR SEL H** line is always asserted selecting the address counter inputs. Note however, that **ADDR SOURCE TRIG L** still asserts each time **STROBE L** asserts in these modes.

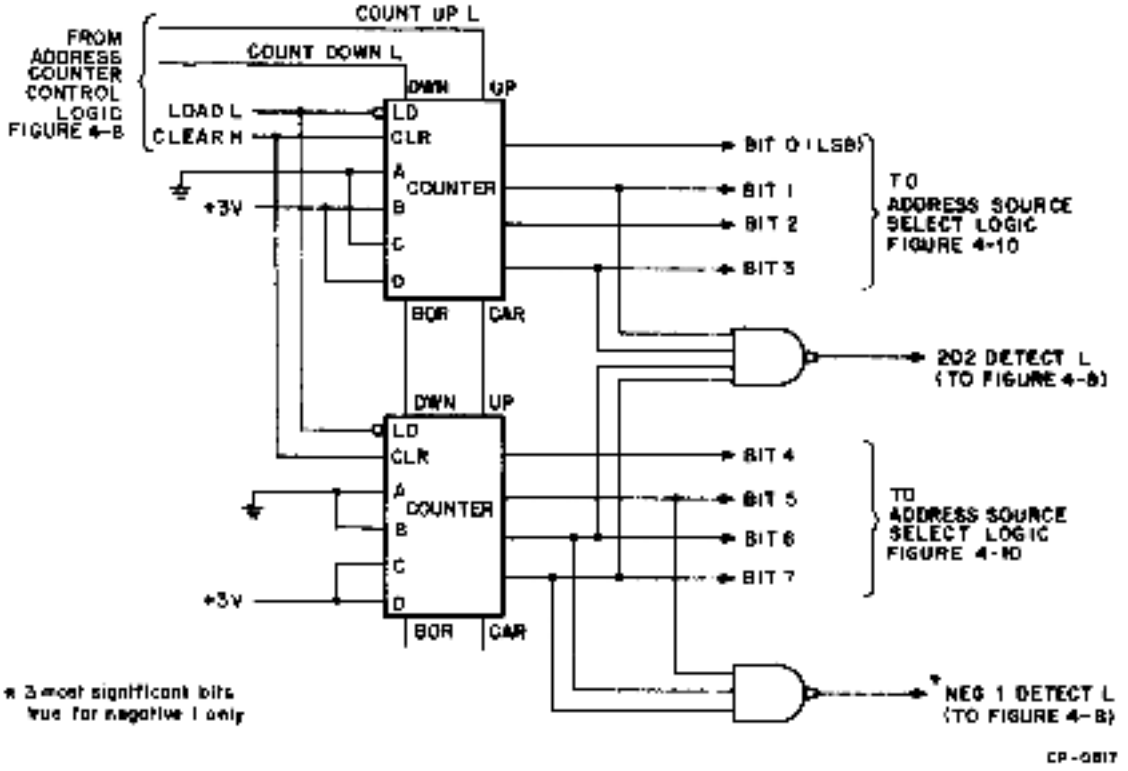

Figure 4-9 Address Counter Logic

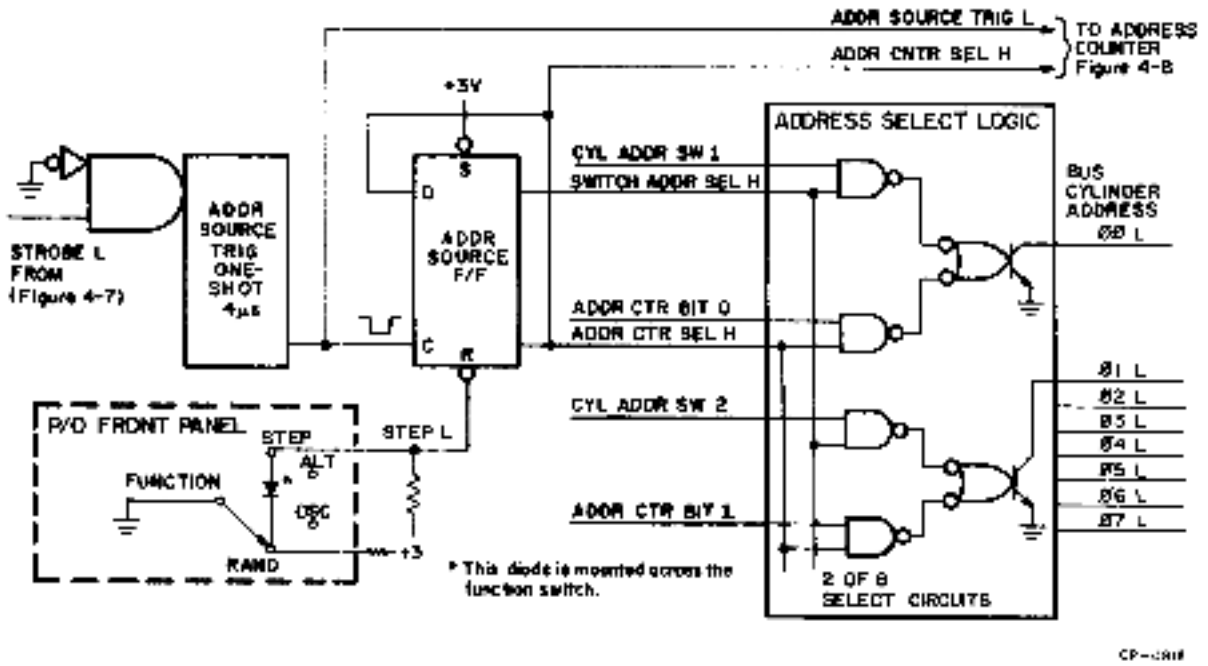

Figure 4-10 Cylinder Address Source Select Logic

4.3.2.5 Fault Detect Logic – The fault detect logic monitors the disk drive fault inputs (Figure 4-11). When BUS ADDRESS INVALID L asserts, the flip-flop sets turning the driver on. When the driver turns on, a ground is applied to the ADDRESS INV indicator causing it to illuminate. The indicator remains illuminated until the RTZ switch is set to the up position resetting the flip-flop. When BUS SEEK INCOMPLETE L asserts, a ground is applied to the SEEK INC indicator.

4.4 FLOW DIAGRAM DESCRIPTION

The following flow diagrams provide a step by step explanation of the exerciser operating sequences. Figure 4-12 covers the writer exerciser module operation, and Figures 4-13 through 4-16 cover the positioner exerciser module operation in each of the four modes.

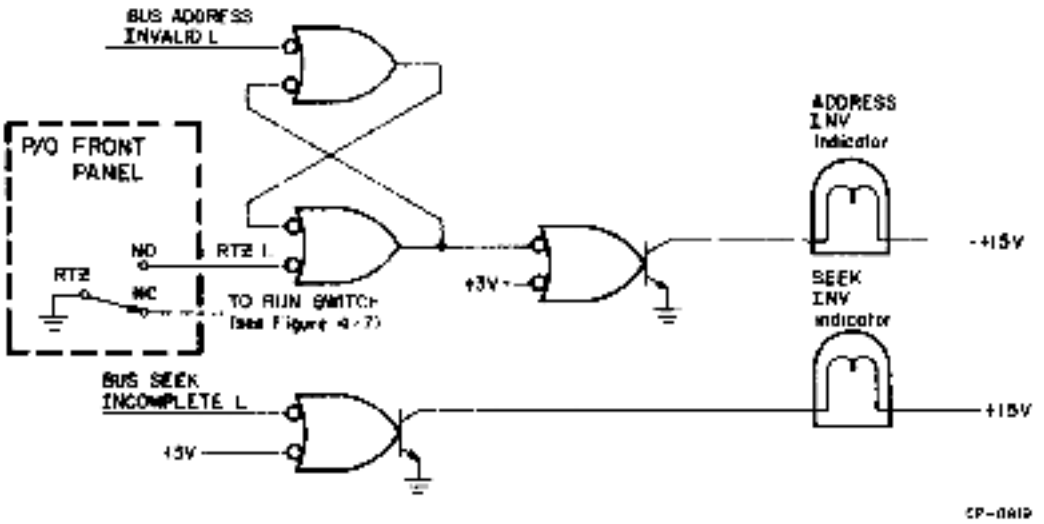

Figure 4-11 Fault Detect Logic

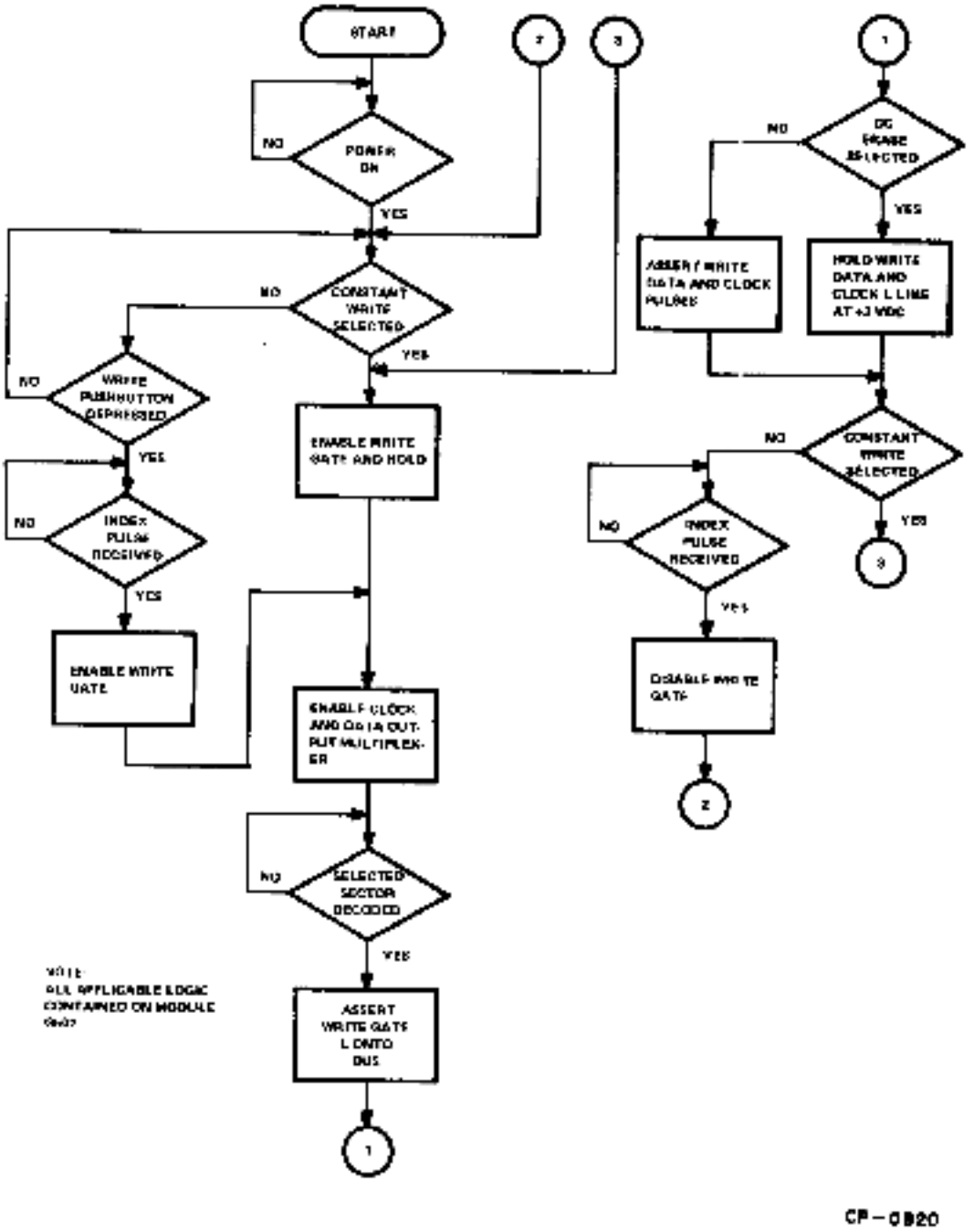

Figure 4-12 Writer Exerciser Flow Diagram

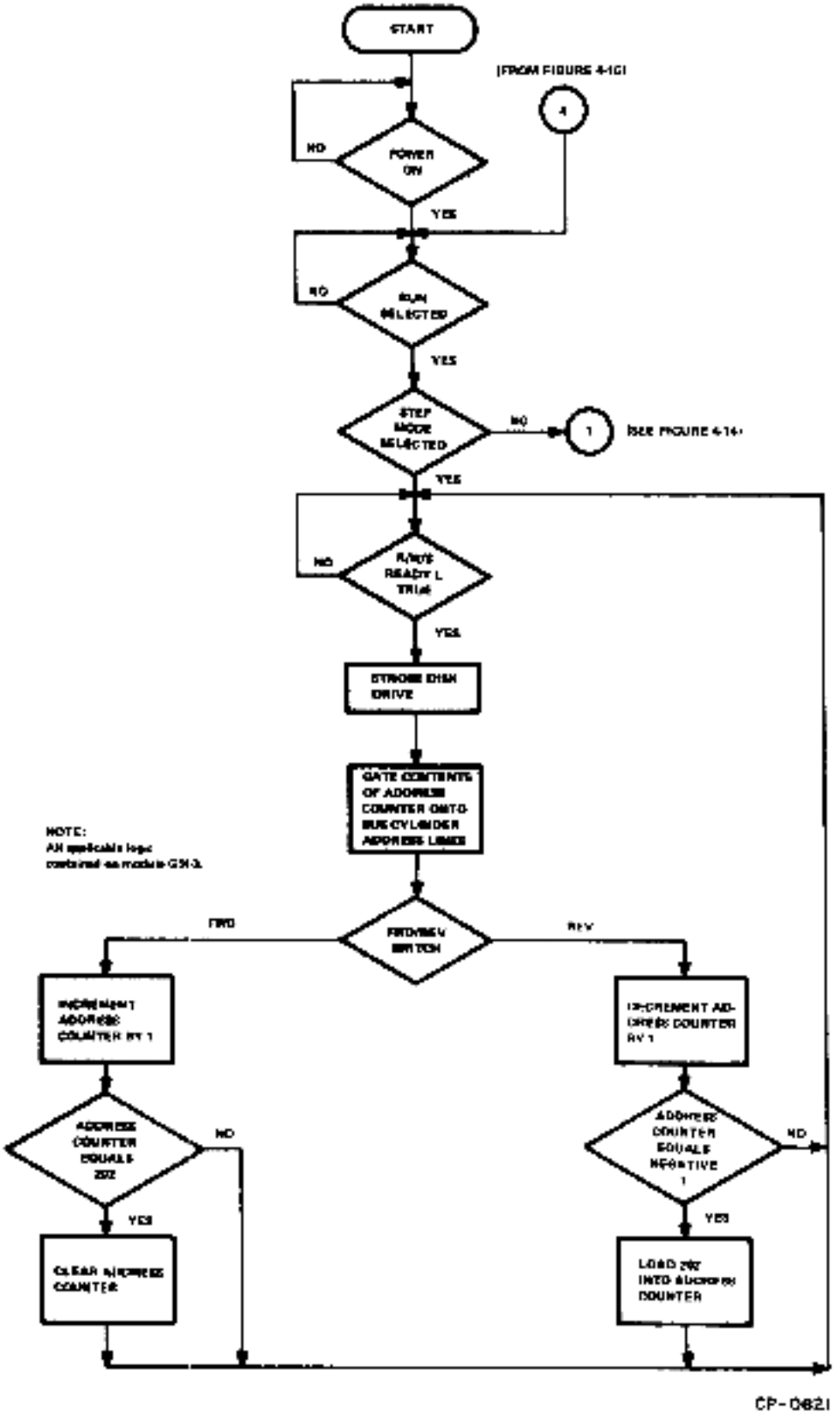

Figure 4-13 Positioner Exerciser Step Mode Flow Diagram

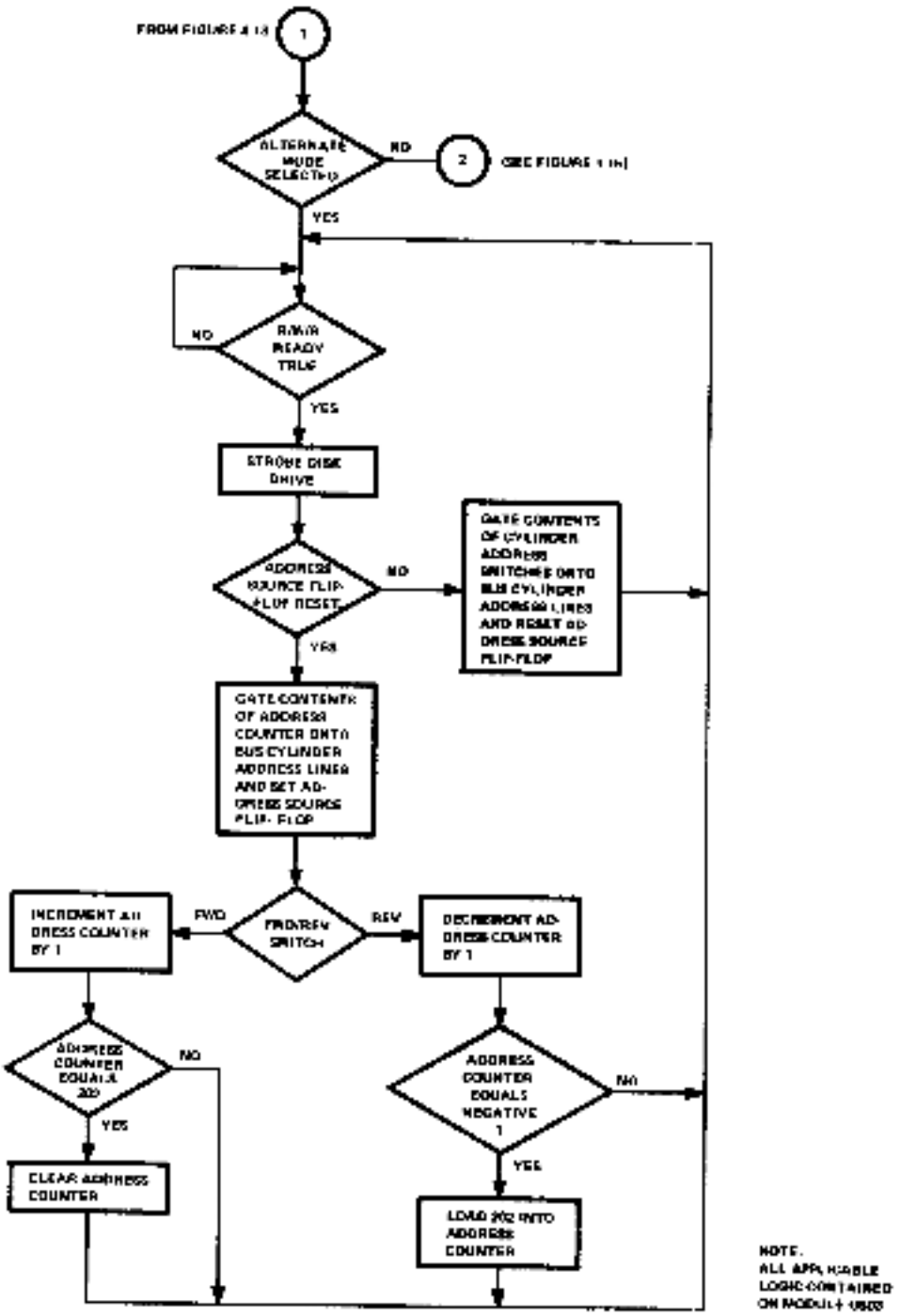

Figure 4-14 Positioner Exerciser Alternate Mode Flow Diagram

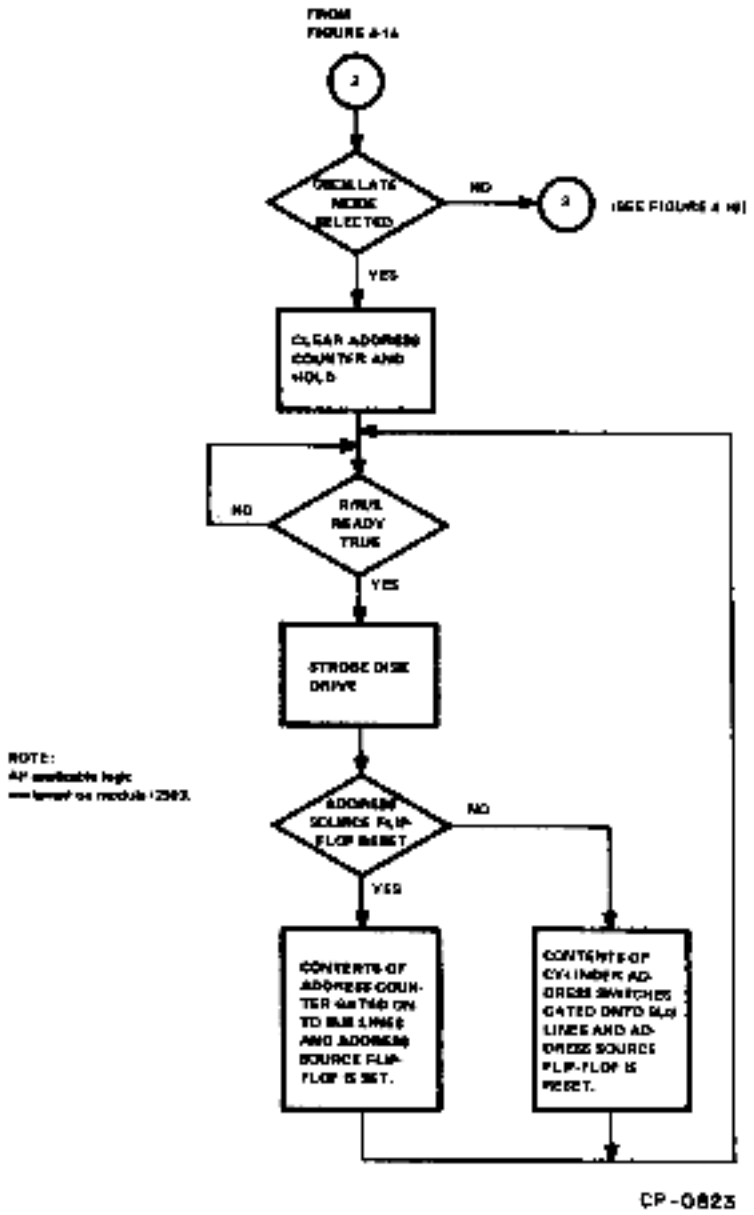

Figure 4-15 Positioner Exerciser Oscillate Mode Flow Diagram

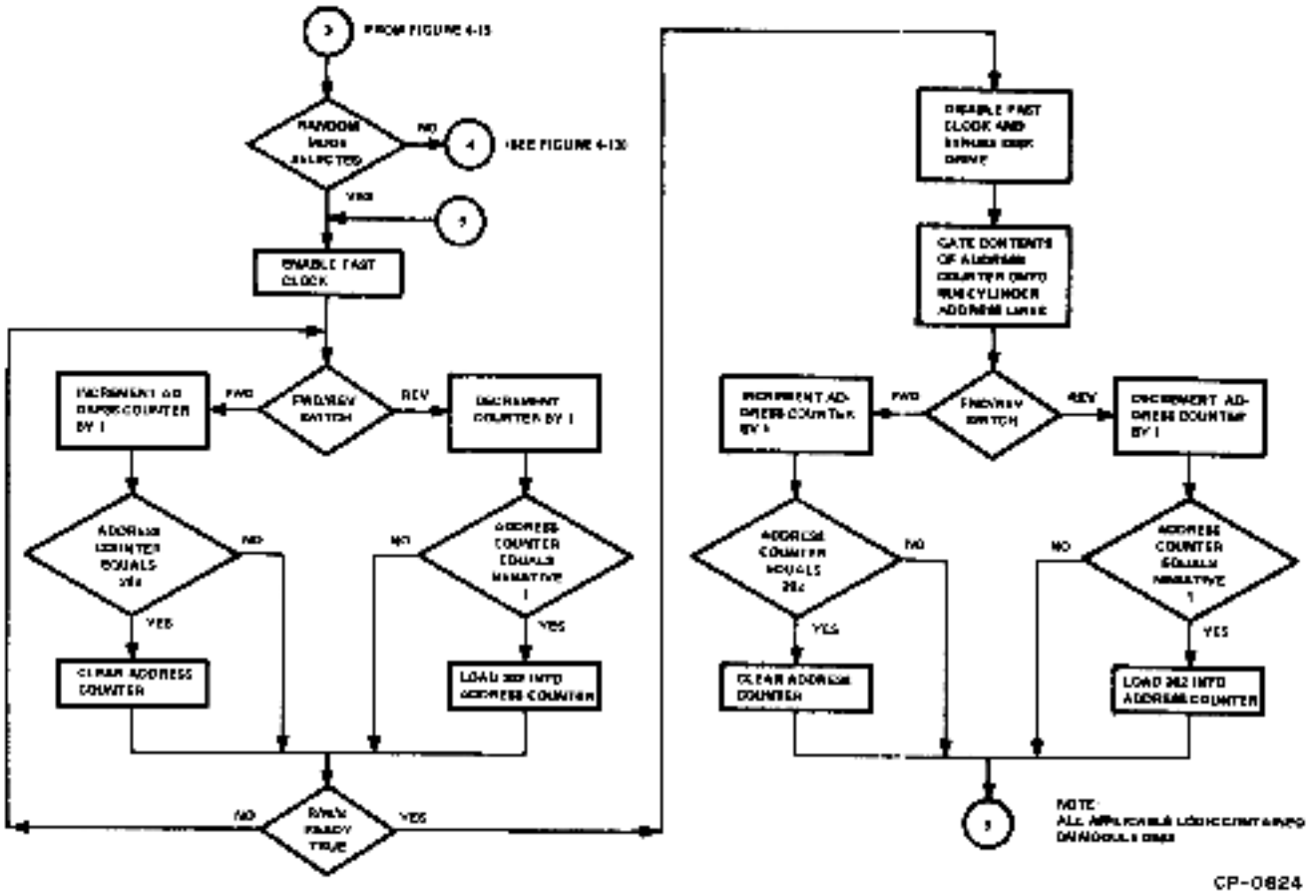

Figure 4-16 Positioner Exerciser Random Mode Flow Diagram

CHAPTER 5
MAINTENANCE

5.1 SCOPE

This chapter lists test equipment required and provides a complete description of exerciser maintenance procedures, including a preventive schedule and a corrective maintenance troubleshooting flow diagram.

5.2 MAINTENANCE PHILOSOPHY

Basically, exerciser maintenance consists of preventive and corrective maintenance procedures, and a maintenance log. The preventive maintenance procedures are performed regularly in an attempt to detect any damage caused by improper handling of the unit. The corrective maintenance troubleshooting flow diagram is provided to aid service personnel in isolating and repairing faults in exerciser circuitry. The maintenance log (included in the back of this manual) is used to record all maintenance action and aid in detecting any component failure pattern that may develop.

5.3 TEST EQUIPMENT REQUIRED

Exerciser maintenance procedures require the test equipment, tools, and materials listed in Table 5-1, in addition to standard hand tools, cleaners, test cables, and probes.

5.4 PREVENTIVE MAINTENANCE

Preventive maintenance consists of tasks performed at periodic intervals to ensure proper equipment operation and minimum unscheduled maintenance. These tasks include visual inspection and operational checks. Table 5-2 provides a recommended preventive maintenance schedule.

Table 5-1
Test Equipment Required

Equipment	Manufacturer	Designation
Oscilloscope	Tektronix	Type 453 or equivalent
X10 Probe (2)	Tektronix	P6008
Multimeter	Triplett/Simpson	Model 310/Model 260
Module Extender	DIGITAL	W984 (Dual Height)

Table 5-2
Preventive Maintenance Schedule

Performance Interval	Test or Procedure
Monthly	Visually inspect for physical damage, correct if required.
Monthly	Clean externally.
Monthly	Check that all modules are properly seated in the connector block.
Quarterly (Every 3 months)	Check that all indicators work properly.
Quarterly	Clean internally with vacuum cleaner or a soft brush.
Quarterly	Touch up external paint scratches or scrapes. Check for looseness of the knobs, switches, and indicators.

5.5 CORRECTIVE MAINTENANCE

The following information will aid the service technician in isolating failing exerciser components. The information is presented in flow diagram form such that correctly functioning exerciser circuitry is systematically eliminated. Using the flow diagram (Figure 5-1) and logical deductive reasoning, faulty components can be located.

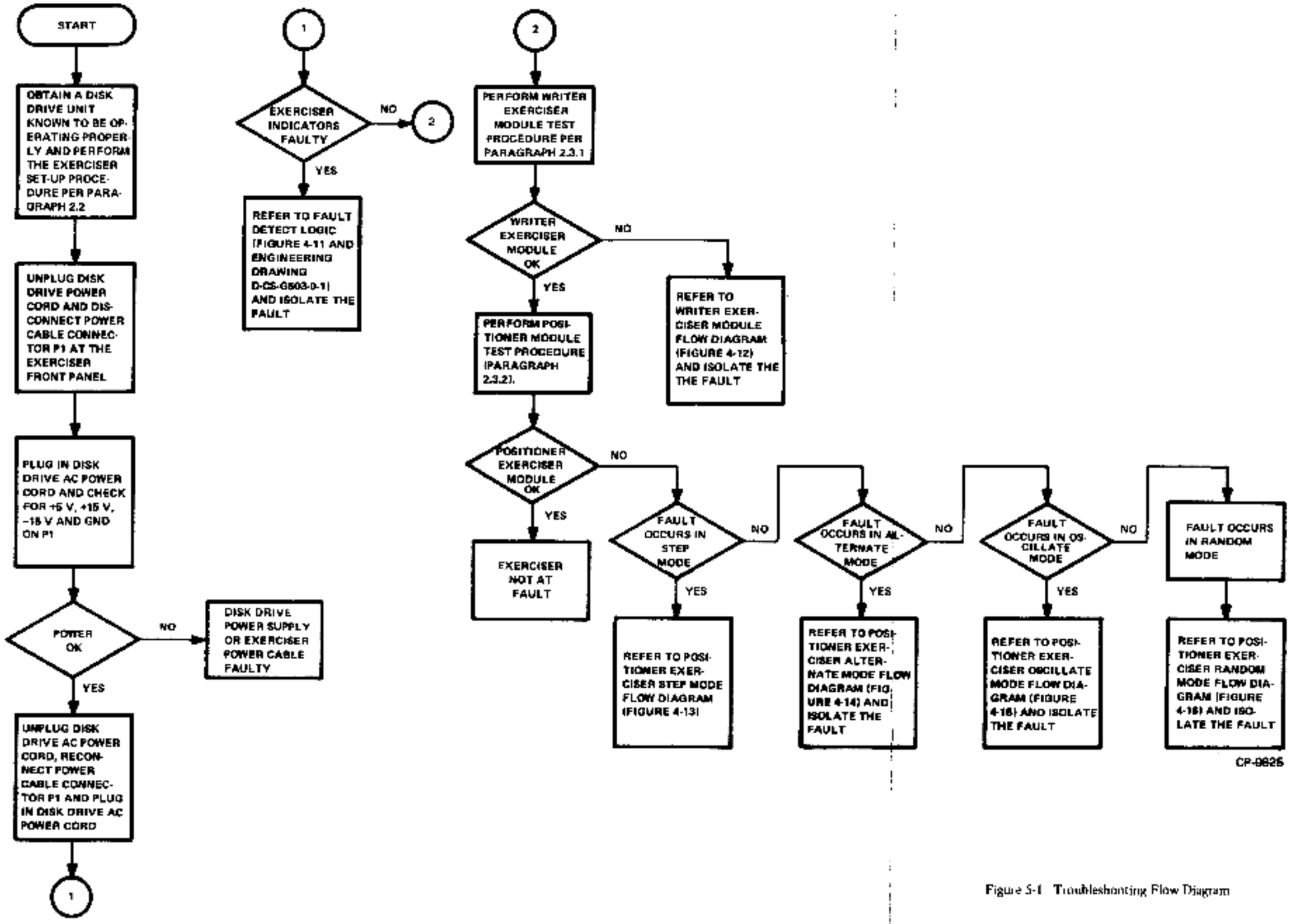

Figure 5-1 Troubleshooting Flow Diagram

CHAPTER 6
RK05 DISK DRIVE MAINTENANCE USING THE RK05 EXERCISER

6.1 SCOPE

This chapter contains RK05 Disk Drive alignment, check-out, and adjustment procedures which incorporate the use of the RK05 Exerciser as a maintenance aid. For additional maintenance information, refer to the *RK05 Disk Drive Maintenance Manual*, DEC-00-RK05-D3.

6.2 ALIGNMENT, CHECKS, AND ADJUSTMENTS

6.2.1 Alignment Cartridges

6.2.1.1 RK05K-AC Alignment Cartridge – This DEC alignment cartridge represents the preferred method for RK05 alignment procedures. It provides three tracks (principal track 105, plus spare tracks 85 and 125) of constant frequency data with alternate sectors recorded at displacements of +0.0025 and −0.0025 inches, respectively, from the ideal track locations.

When a head is aligned to specifications, the readback signal shows equal amplitudes for all sectors (shown when the oscilloscope displays only two sectors and triggered by the SECTOR signal). The degree of amplitude inequality in alternating sectors indicates the departure from exact alignment.

Sector timing data is included on all three tracks to indicate head gap location relative to sector pulse detection. This data is represented by a single pulse (70 μs nominal) following the INDEX pulse and 10 μs prior to the onset of head alignment data.

The RK05K-AC alignment cartridge also indicates the degree of runout on the spindle. When the oscilloscope is triggered on INDEX and a complete revolution of the disk is displayed, the head may appear to be aligned at some sector locations and misaligned at others. This condition indicates the degree of wobble of the spindle. Figure 6-1a shows a spindle with negligible runout; Figure 6-1b shows a spindle with considerable runout. The amount of wobble can be determined by the amplitude differences occurring in any adjacent pair of sector boundaries using the same equations used for head alignment.

NOTE

If the condition shown in Figure 6-1b exists, ensure that the mating of spindle and disk is clean. Improper mating can cause such runout.

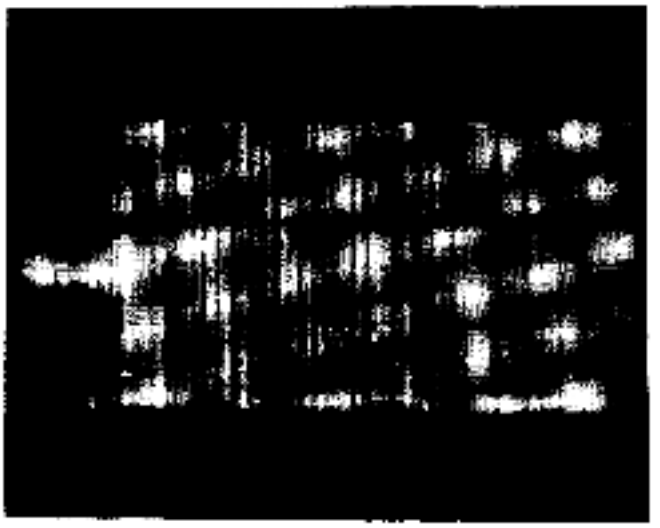

Figure 6-1a Spindle Runout
(Negligible Runout)

Figure 6-1h Spindle Runout
(Considerable Runout)

Specifications for the RK05K-AC alignment cartridge are as follows:

Alignment and Sector Timing Tracks:
Primary Track – 105
Backup Tracks – 85, 125 (Use only if track 105 is unusable)

Recorded Frequency: Nominal 720 kHz

Number of Sectors: 12

Alignment Accuracy, track 105: ±200 microinches

Sector Timing: Single pulse 70 ± 1 μs following INDEX pulse

6.2.1.2 2315 CE Test Cartridge Shim Installation – (To be used only when an RK05K-AC alignment cartridge is not available.) Before a 2315 CE test cartridge can be used for any RK05 alignment procedure, a .005-inch shim must be installed in the disk hub. Because the 2315 cartridge is recorded at low density and the RK05 uses a high-density cartridge, this shim is required to accentuate the wobble of the low-density cartridge and allow it to be used for high-density alignments. To install the shim properly, trim a piece of .005-inch shim stock as indicated in Figure 6-2 and attach it to the disk hub as follows:

1. Locate sector 00 by holding the cartridge upside down and observing the sector slots in the metal lip of the disk hub (Figure 6-2). Rotate the disk clockwise inside the plastic case until two slots close together are located (sector 11 and index slots). Continue to rotate the disk clockwise, stopping at the next slot (sector 00).

2. Position the shim 180 degrees from the sector 00 slot. Ensure that the narrow portion of the shim is in the spindle cavity and that the shim does not reach the bottom of the cavity.

3. Tape the shim in position.

6.2.2 Servo System Timing Checks and Adjustments
The servo system timing adjustments are precisely set at the factory and should not be routinely adjusted or fine-tuned as part of any PM procedure. If a positioner malfunction is suspected, all waveforms related to each phase of servo operation should be examined; based on these, the possible trouble should be diagnosed before any servo adjustments are attempted. Because some of the servo check tolerances differ from the adjustment tolerances, reference should be made to the check tolerances in Table 6-1 before adjustments are attempted.

Table 6-1
Servo System Checks

Checks	Drive Configuration	Test Point	Tolerance	Reference
Full Stroke Profile	202 cyl osc seek	A05H1	< 90 ms waveform duration with plateau at trailing edge	Figure 6-7
Full Stroke Position	202 cyl osc seek	A05M1	equal beginning & end amplitudes within 5%. < 1 V overshoot	Figure 6-8
Outer Limit	rep RTZ	A05J1	3 to 3.5 V amplitude. < 0.3 V plateau	Figure 6-9

Table 6-1 (Cont)
Servo System Checks

Checks	Drive Configuration	Test Point	Tolerance	Reference
Sine Amplitude/Offset	4 cyl osc seek	A05M1	10 ± 1 V p-p, ground symmetrical within ±10%	Figure 6-3
Velocity Offset	4 cyl osc seek	A05M1	ground symmetrical within ±10%	Figure 6-3
Cosine Amplitude	4 cyl osc seek	A05S1	10 ± 1 V p-p, ground symmetrical within ±10%	Figure 6-4
Velocity Amplitude	2 cyl osc seek	A05M1	center pulse duration = 3.2 ± 0.5 ms	Figure 6-5
Acceleration	64 cyl osc seek	A05H1	14 ms rise time	Figure 6-6

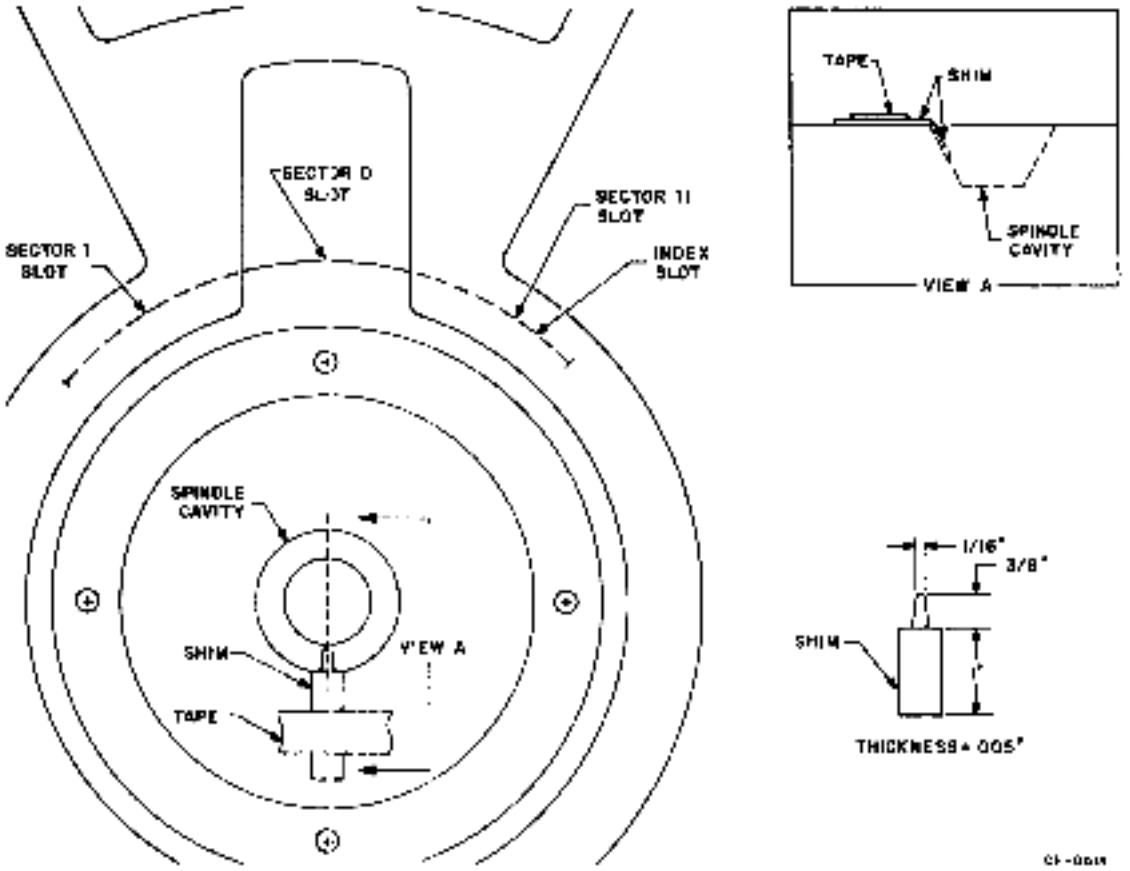

Figure 6-2 CE Test Cartridge Shim Installation

Table 6-2
Servo System Adjustments

Potentiometer*	Function
SA (Sine Amplitude)	Sets amplitude of SIN POSITION signal
SO (Sine Offset)	Adjusts SIN POSITION symmetry about ground
CA (Cosine Amplitude)	Sets amplitude of COS POSITION signal
CO (Cosine Offset)	Adjusts COS POSITION symmetry about ground
VO (Velocity Offset)	Adjusts velocity generator output at zero velocity. (Provides offset control in position loop.)
LSA (Limit Signal Amplitude)	Simultaneously adjusts amplitude of both Limit signals before digitizing
LSO (Limit Signal Offset)	Sets zero level of Limit signal with positioner in normal recording area of disk
CURRENT (on H604)	Sets maximum positioner current (determines acceleration)

*Potentiometers are located on the 4038 card (card position 5) of the electronic module. Remove the prefilter at the rear of the drive to gain access to these potentiometers.

NOTE
Settings within the tolerances listed in Table 6-2 should not be adjusted.

For most malfunction cases, the positioner system will operate enough to allow dynamic measurements. However, if the positioner either does not operate or operates very erratically, the static checks and adjustments described in Paragraph 6.2.2.2 should be performed. If servo system parts are field-installed, settings must be readjusted, according to Table 6-1.

6.2.2.1 Dynamic Off-Line Checks and Adjustments

1. To prepare the RK05 Disk Drive for testing, perform the RK05 Exerciser set-up procedure (Paragraph 2.2).

2. Set the oscilloscope controls (Tektronix 453 or equivalent) as follows:

   - vertical
     - mode = channel 1
     - sensitivity = 2 V/div
     - trigger = channel 1
     - coupling = dc
   - sweep
     - A sweep
     - time = 10 ms/div
     - trigger = normal
   - trigger
     - source = external*
     - coupling = ac
     - slope = +

   *Connect the scope external trigger input to disk drive B0502 (FWD II)

3. To avoid excessive scope control changes and to keep the probe test point changes to a minimum, perform the following checks and adjustments in the listed sequence.

   SINE Amplitude (SA) and Offset (SO)

   a. Set exerciser front panel RTZ and RUN toggle switches to the down position.

   b. Set the exerciser Function knob to OSC.

   c. Set exerciser Cylinder Address-4 toggle switch to 1 and all other Cylinder Address switches to 0.

d. Set the RUN toggle switch to RUN; observe the linear positioner oscillates between cylinders 0 and 4.

e. Observe A05M1 (SIN POSITION) for a scope display as illustrated in Figure 6-3a.

The waveform amplitude must be 10 ± 1 V p-p and symmetrical about ground.

If necessary, adjust SA (Table 6-2) for the correct amplitude and S0 for the ground symmetry.

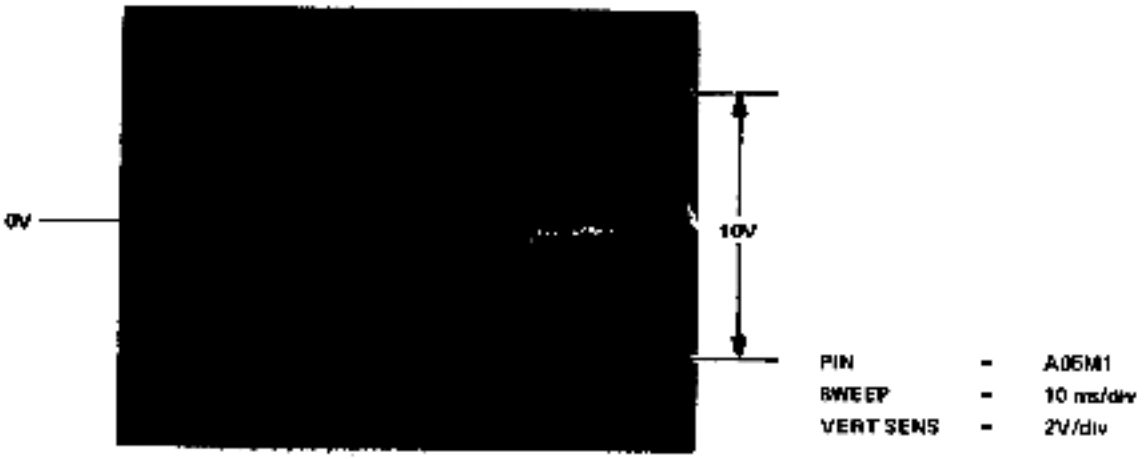

a. Correct Waveform (Symmetrical Signal)

b. Incorrect Waveform (Signal not Symmetrical about Ground)

Figure 6-3 Sine Amplitude/Offset and Velocity Offset Waveform

Velocity Offset (VO)

a. Observe that the voltage minimums at A05M1 (SIN POSITION) are symmetrical about ground (Figures 6-3a and 6-3b). A small amount of ripple at the minimum voltage levels is normal. To estimate the degree of symmetry, use the average value of the ripple as the voltage minimum.

b. If necessary, adjust VO (Table 6-2) for the required symmetry.

Cosine Amplitude (CA) and Offset (CO)

a. Observe A05S1 (COS POSITION) for a scope display as illustrated in Figure 6-4. The waveform amplitude must be 10 ± 1 V p-p and symmetrical about ground.

b. If necessary, adjust CA (Table 6-2) for the correct amplitude and CO for the ground symmetry.

Velocity Amplitude (VA)

a. Set the exerciser front panel Cylinder Address-4 toggle switch to 0 and the Cylinder Address-2 toggle switch to 1; observe the linear positioner oscillates between cylinders 0 and 2.

b. Set the scope sweep time to 1 ms/div.

c. Observe A05M1 for a scope display as illustrated in Figure 6-5. The duration of the center cycle must equal 3.2 ± .05 ms.

d. If necessary, adjust VA (Table 6-2) for the correct time.

Acceleration (Positioner Current)

a. Set the exerciser front panel Cylinder Address-2 toggle switch to 0 and the Cylinder Address-64 toggle switch to 1; observe the linear positioner oscillates between cylinders 0 and 64.

b. Set the scope sweep time to 5 ms/div and the vertical sensitivity to 0.5 V/div.

c. Observe disk drive A05H1 (VELOCITY) for a velocity profile as illustrated in Figure 6-6.

d. If necessary, adjust R15 (on H604) for a 14 ms rise time.

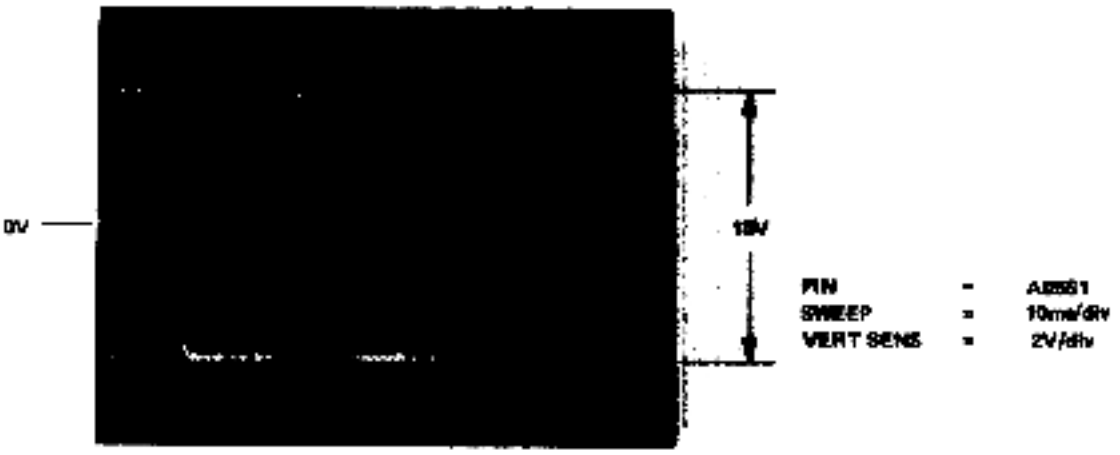

Figure 6-4 Cosine Amplitude/Offset Waveform

PIN = A05M1
SWEEP = 1 ms/div
VERT SENS = 2V/div

Figure 6-5 Velocity Amplitude Waveform

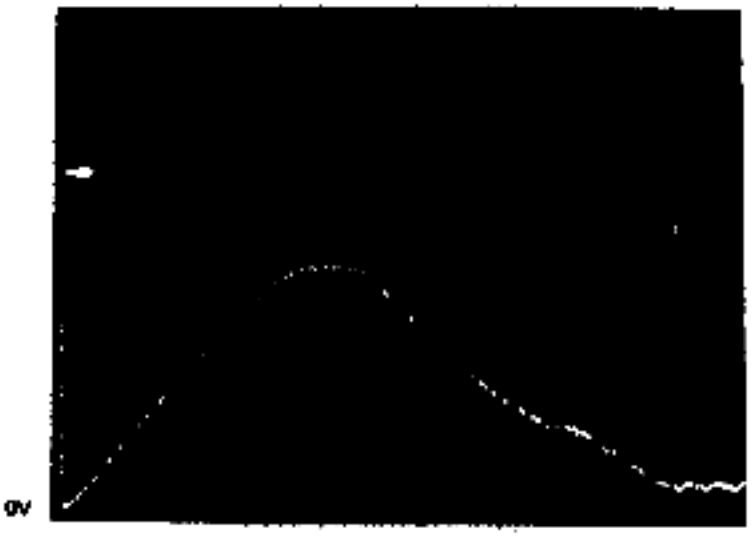

PIN = A05H1
SWEEP = 5 ms/div
VERT SENS = 0.5V/div

Figure 6-6 Acceleration Waveform

Full Stroke Profile

a. Set the exerciser front panel Cylinder Address-128, 8, and 2 toggle switches to 1; observe the linear position oscillates between cylinders 0 and 202.

b. Set the scope sweep time to 10 ms/div and the vertical sensitivity to 0.5 V/div.

c. Observe A05H1 (VELOCITY) for a scope display as illustrated in Figure 6-7. The 0 V level of the profile must be reached in less than 90 ms from the start of the seek. In addition, there must be a definite plateau (constant voltage level) at the end of the seek. If this is not the case, recheck the Velocity Amplitude (VA) and the Acceleration (Positioner Current). Adjust the appropriate potentiometer (Table 6-2) as required to obtain the correct waveform.

Full Stroke Position Waveform

a. Set the scope vertical sensitivity to 2 V/div and observe A05M1 (SIN POSITION) for a scope display as illustrated in Figure 6-8. The waveform amplitudes at the start and end of the seek must be equal within 5% and the overshoot at the end of the seek must not exceed 1 V. If overshoot is excessive, recheck the Velocity Amplitude (VA) and the Acceleration (Positioner Current).

Figure 6-7 Full Stroke Waveform

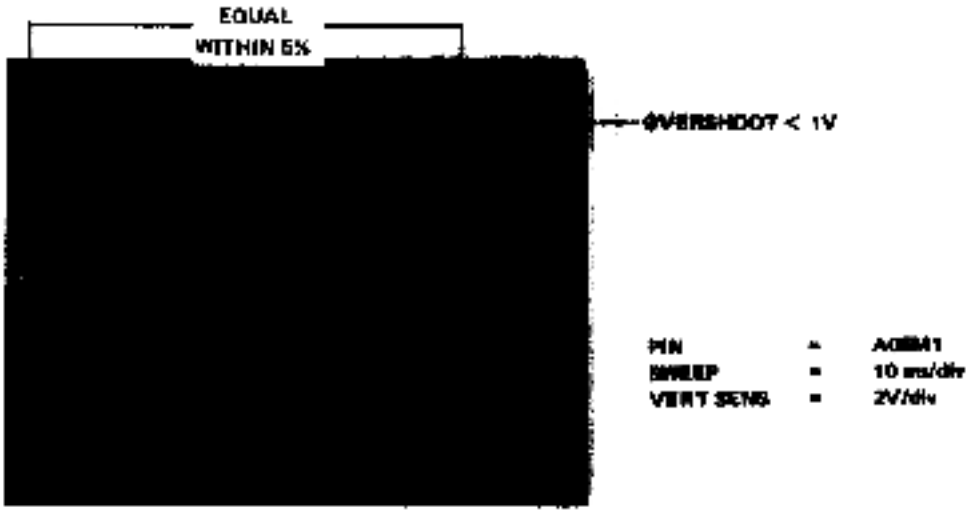

Figure 6-8 Full Stroke Position Waveform

Outer Limit (dynamic test)

a. Set exerciser front panel RTZ toggle switch to RTZ.

b. Trigger the scope from B05K2 (REV H).

c. Set the scope vertical sensitivity to 1 V/div and observe A05J1 (LIMIT) for a scope display as illustrated in Figure 6-9. The waveform peak amplitude must be 3 to 3.5 V with a minimum level of 0 V. In addition, the voltage plateau immediately following the trailing edge must not exceed 0.3 V. If not, perform the Static Limit Adjustment procedure (Paragraph 6.2.2.2).

d. Set the exerciser RTZ toggle switch to the down position.

e. Check the INNER LIMIT signal by physically moving the positioner to the inner limit (towards the spindle). If the INNER LIMIT signal is operative, a restore operation will be initiated. If this is not the case, perform the Static Limit Adjustment procedure (Paragraph 6.2.2.2).

6.2.2.2 Static Tests and Adjustments -- Perform the following procedure when the positioner or a major servo system component has been replaced. This procedure should also be followed as a diagnostic aid when the positioner system is inoperative or unstable in operation.

To make the required adjustments, remove the disk cartridge from the drive and physically move the positioner carriage back and forth while observing the selected signal. Use the automatic scope sweep and do not attempt to sync the sweep to the observed signal. With a little practice, the most convenient sweep speed setting and the type of positioner motion required will quickly be discovered.

To make the static adjustments, proceed as follows:

1. Do not install a disk cartridge in the drive.

2. Place a finger on the positioner carriage assembly and place switch S1 (on H6M) in the down or off position. (This precaution prevents any possible carriage motion caused by transient switch noise.)

3. Make the following checks and adjustments.

Sine Amplitude (SA) and Offset (SO)

a. Set the scope vertical sensitivity to 2 V/div and adjust the ground reference to the center of the scope screen.

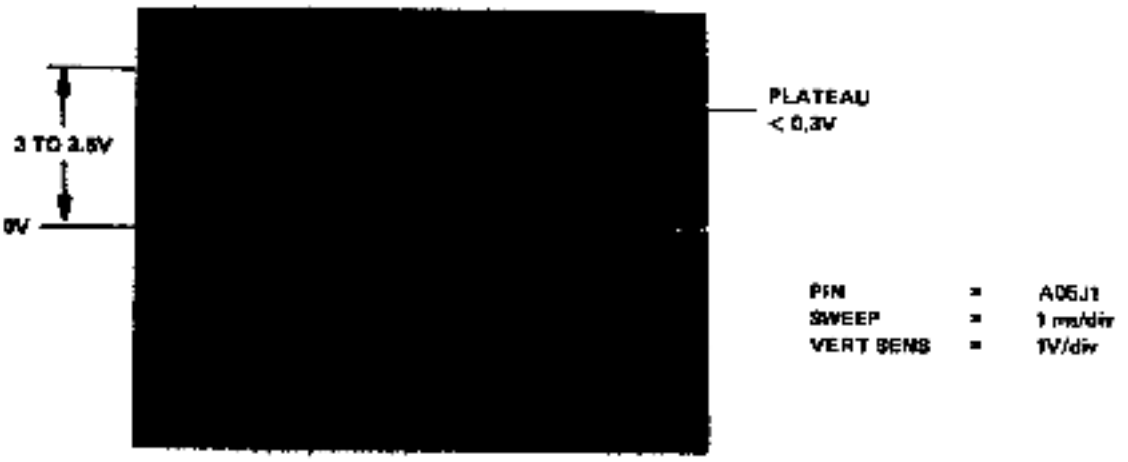

Figure 6-9 Outer Limit Waveform

b. Observe A05M1 (SIN POSITION) while manually moving the positioner back and forth. Adjust SA (Table 6-2) for a 10 V p-p signal amplitude.

c. Adjust SO until the signal is symmetrical about ground.

Cosine Amplitude (CA) and Offset (CO)
Observe A05S1 and adjust CA and CO (Table 6-2) in the same manner as that used in the Sine Amplitude and Offset procedure above.

Limit Signal Amplitude (LSA) and Offset (LSO)

a. Set the scope vertical sensitivity to 1 V/div and adjust the ground reference to the center of the scope screen.

b. Observe A05J1 with the positioner stationary at approximately the center of travel. Adjust LSO (Table 6-2) for a ground signal at the center of the scope screen.

c. Move the positioner to the inner limit and observe the voltage change on the scope. Similarly, move the positioner to the outer limit and observe the voltage change.

d. Adjust LSA until the smaller voltage level obtained in step c is 3.0 V.

e. Return the positioner to the center of travel and readjust LSO for 0 V.

f. Repeat step c above and, if necessary, readjust the smaller voltage level to 3.0 V.

6.2.3 Read/Write Data Separator (G180 Card) Adjustment
Adjustment of the data separator is not part of the normal maintenance and therefore is not recommended unless a G180 component that affects the data separator section has been replaced. If this occurs, set the width of the data window as follows:

NOTE

R13 is the write current adjustment potentiometer and should not be adjusted in the field.

1. Install a prerecorded cartridge in the drive.

2. Place the drive in the run mode and manually position the heads at any recorded cylinder past track zero. An all ZERO data recording is preferable; however, any recorded pattern is sufficient.

3. Set the oscilloscope controls as follows:

- vertical
  - mode = channel 1
  - sensitivity = 1 V/div
  - trigger = channel 1
  - coupling = dc
- sweep
  - A sweep
  - time = 100 ns/div
  - trigger = normal
- trigger
  - source = internal
  - coupling = ac
  - slope = +

4. Connect the channel 1 scope probe to TP1 of the G180 card (card position 1). It should be possible to obtain solid scope synchronization at the sweep start. (Disregard the unsynchronized pulses that follow.)

5. Adjust R55 fully counterclockwise and R54 clockwise.

6. Adjust R54 counterclockwise to obtain a 500 ns pulse width as measured from the start of the rise to the start of the fall.

7. Readjust R55 clockwise until the pulse width decreases to 440 ± 10 ns as measured from the start of the rise to the start of the fall.

6.2.4 Read/Write Head Check and Alignment
The following procedure describes the complete read/write head alignment. Before attempting this alignment procedure, ensure that the drive operates correctly and that the heads have not been contaminated by exposure to a defective cartridge. If new heads have been installed, it is recommended that this alignment procedure be performed off-line using the RK05 Exerciser.

6.2.4.1 RK05K-AC Alignment Cartridge -- The appropriate on-line diagnostics may be used; however, DO NOT ADJUST A HEAD THAT HAS LESS THAN A 15% ERROR (Figure 6-10).

To align or check the heads proceed as follows:

1. Perform the RK05 Exerciser set-up procedure (Paragraph 2.2).

2. Install an alignment cartridge on the spindle and operate the drive in the run mode for at least 30 minutes. This must be done to allow the alignment cartridge and the drive components to achieve thermal stabilization.

3. Using the WR PROT switch, place the drive in the write protect condition.

4. Set the oscilloscope controls as follows:

   - vertical
     - mode = ADD (invert CHAN 2)
     - sensitivity = 20 mV/div
     - coupling = dc
   - sweep
     - A sweep
     - time = 500 μs/div
     - trigger = normal
   - trigger
     - source = external*
     - coupling = ac

   *Use a 1:1 probe to connect the scope external trigger input to A02S7 (sector).

5. Connect the channel 1 probe to TP3 and the channel 2 probe to TP4 of the G180 card. (Use 10: 1 probes.)

6. Ensure that the positioner track scale indicates cylinder 00. If it does not, loosen and readjust the scale to ensure proper scale readout over the entire length of the head.

7. Select cylinder 105 as follows:

   a. Set the exerciser front panel Head Select toggle switch to LOWER.

   b. Set the exerciser Function knob to OSC.

   c. Set the exerciser Cylinder Address-64, 32, 8 and 1 toggle switches to 1 and all other Cylinder Address toggle switches to 0 (cylinder address 105).

   d. Quickly set the exerciser RUN toggle switch to RUN and back to the down position, observe the linear position moves to cylinder 105.

8. Monitor the scope display for one of the waveforms illustrated in Figure 6-10.

NOTE

If a bright horizontal line does not appear at the beginning of the displayed waveform as shown in Figures 6-10b through 6-10g, adjust the scope level control until the line appears. The bright line indicates proper positioning of the sectors on the display [odd sectors (X1) on left, even sectors (X2) on the right].

9. If none of the illustrated waveforms appear, the head is misaligned so badly that manual manipulation of the positioner is required. If manual manipulation is required, perform the following steps; if not, proceed to step 10.

   a. Place switch S1 (on H604) in the down or off position, keeping a finger on the carriage to dampen any positioner transients.

   b. Slowly move the positioner by hand until the alignment pattern occurs. Cylinders 85 and 125 have identical patterns, so be sure that the displayed pattern is for cylinder 105.

   c. Observe the track scale and note the cylinder indication when the "right on" waveform (Figure 6-9) is obtained. If the scale indicates less than 105, the head is too far forward in the carriage. Conversely, if the scale indicates more than 105, the head is back too far in the carriage.

a. Large misalignment. Head at too great a track radius. Further misalignment reduces amplitude of signal on right side of screen.

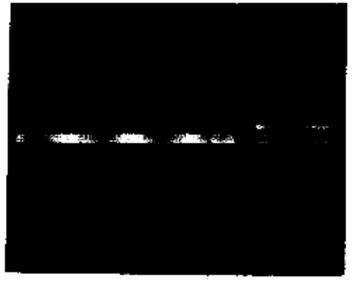

b. Head considerably misaligned. Smaller left amplitude indicates head outside of CYL 105.

error = −72%

BRIGHT LINE SHOULD APPEAR HERE

c. Head slightly misaligned. Smaller left amplitude indicates head outside of CYL 105.

error = −15%

BRIGHT LINE SHOULD APPEAR HERE

d. Head correctly aligned. Amplitudes are equal.

BRIGHT LINE SHOULD APPEAR HERE

e. Heads slightly misaligned. Larger left amplitude indicates head inside of CYL 105 (toward 106).

error = +15%

BRIGHT LINE SHOULD APPEAR HERE

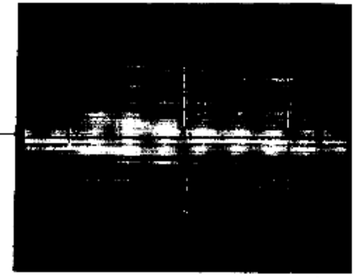

f. Head considerably misaligned. Larger left amplitude indicates head inside of CYL 105.

error = +72%

BRIGHT LINE SHOULD APPEAR HERE

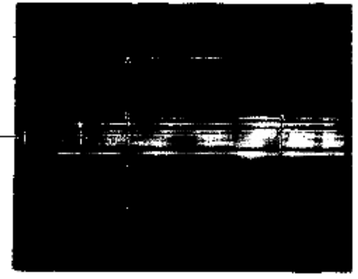

g. Large misalignment. Head inside of CYL 105. Further misalignment reduces amplitude of signal on left side of screen.

BRIGHT LINE SHOULD APPEAR HERE

NOTE

The alignment error is denoted as a signed percentage. The percentage is derived from the relative amplitudes of the two signal modes (x_1 and x_2) according to the following expression:

$$\% \text{ error} = \frac{x_1 - x_2}{x_1 + x_2} \times 100$$

(Approximate error in MICRO inches equals % error × 35)

The sign denotes the direction of the alignment error. A negative sign indicates the head is too far from center (track less than 105)

Figure 6-10 RK05-AC Alignment Cartridge Head Alignment Waveforms

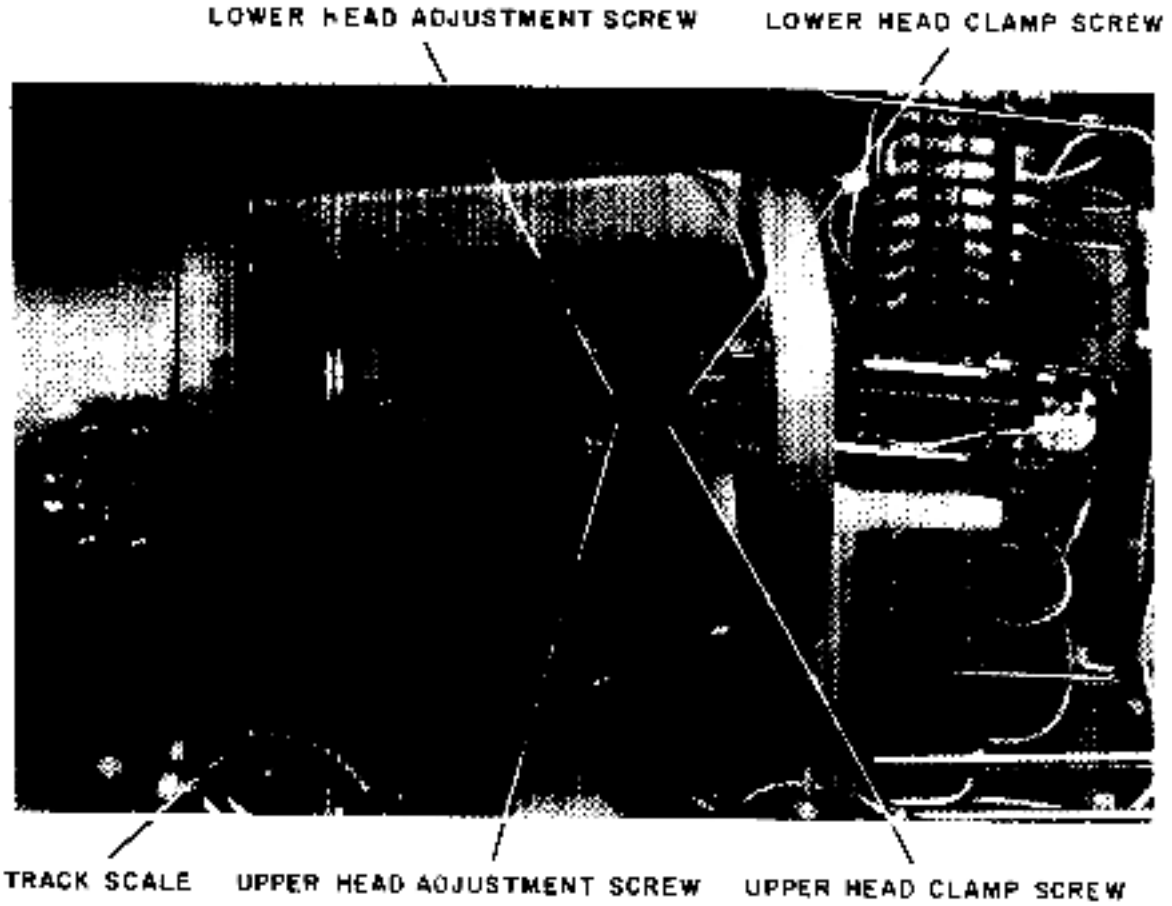

Figure 6-11 Read/Write Head Adjustments

b. Set the exerciser Function knob to OSC.

c. Set the exerciser Cylinder Address-64, 32, 8 and 1 toggle switches to 1 and all other Cylinder Address toggle switches to 0 (cylinder address 105).

d. Quickly set the exerciser RUN toggle switch to RUN and back to the down position; observe the linear positioner moves to cylinder 105.

8. Monitor the scope display for one of the waveforms illustrated in Figure 6-12. If none of the illustrated waveforms appear, the head is misaligned so badly that manual manipulation of the positioner is required. If manual manipulation is required, perform the following steps; if not, proceed to step 9.

a. Place switch S1 (on H604) in the down or off position, keeping a finger on the carriage to dampen any positioner transients.

b. Slowly move the positioner by hand until the alignment pattern occurs. Cylinder 110 has an identical pattern, so be sure that the displayed pattern is for cylinder 105. Do not use undue force on the positioner when manually changing track positions.

c. Observe the track scale and note the cylinder indication when the waveform shown in Figure 6-12d is obtained. If the scale indicates less than 105, the head is too far forward in the carriage. Conversely, if the scale shows more than 105, the head is too far back in the carriage.

d. Loosen the clamp and adjustment screws (Figure 6-11) and move the head in the appropriate direction until the waveform shown in Figure 6-12d is obtained and the scale indication is slightly greater than 105.

e. Lightly tighten the clamp screw and turn on the positioner power (S1 up).

f. Set the exerciser RTZ toggle switch RTZ momentarily; observe the linear positioner moves to cylinder 0.

g. Quickly set the exerciser RUN toggle switch to RUN and then back to the down position; observe the linear positioner moves to cylinder 105 and stops.

9. If one of the illustrated waveforms is present, note in which direction the head must be moved to obtain the proper indication. If it must be moved backward, loosen the head clamp and adjustment screws and gently push the head all the way back into the carriage; if it must be moved forward, loosen only the clamp screw, and then turn the adjustment screw until the correct waveform is obtained. (The adjustment screw is a vernier that only moves the head forward; it should not be left torqued down after this adjustment.)

NOTE

If the positioner is moved from cylinder 105 during the adjustment procedure, perform steps 8f and 8g.

10. Set the exerciser Head Select toggle switch to UPPER.

11. Using a torque wrench (9605893-0-0), if available, tighten the head clamp screw until the wrench begins to ratchet (55 oz/in.). If a torque wrench is not available, use the appropriate Allen wrench to tighten the head clamp screw snugly; however, do not overtighten.

12. Recheck to ensure that the clamping action did not disturb the head adjustment.

6.2.5 Index/Sector Timing Adjustment

6.2.5.1 RK05K-AC Alignment Cartridge – The procedure for adjusting index/sector timing using the RK05K-AC alignment cartridge is as follows:

1. Perform the RK05 Exerciser set-up procedure (Paragraph 2.2).

2. Install an alignment cartridge on the spindle, ensuring that the mating surfaces are clean and operate the drive in the run mode for at least 30 minutes. This must be done to allow the alignment cartridge and the drive components to achieve thermal stabilization.

3. Using the WR PROT switch, place the drive in the write protect condition.

4. Set the oscilloscope controls as follows:

- vertical
  - mode = ADD (invert CHAN 2)
  - sensitivity = 0.2 V/div
  - coupling = dc
- sweep
  - A sweep
  - time = 5 ms/div
  - trigger = normal
- trigger
  - source = external*
  - coupling = ac
  - slope = –

*Use a 1:1 probe to connect the scope external trigger input to A02R2 (INDEX).

5. Connect the channel 1 probe to TP3 and the channel 2 probe to TP4 of the G180 card. (Use 10:1 probes.)

6. Momentarily set the exerciser front panel RTZ toggle switch to RTZ.

7. Select cylinder 105 as follows:

   a. Set the exerciser Cylinder Address-64, 32, 8 and 1 toggle switches to 1 and all other Cylinder Address toggle switches to 0 (cylinder 105).

a. Large misalignment. Head close to CYL 104. (Further misalignment only reduces amplitude of peaks.)

b. Head considerably misaligned. Smaller left null indicates head position less than CYL 105.

error = −60%

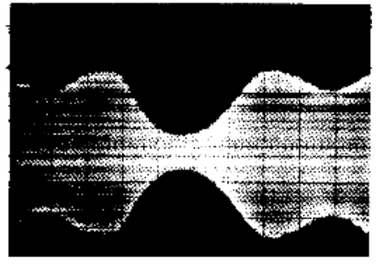

c. Head slightly misaligned. Smaller left null indicates head position less than CYL 105.

error = −33%

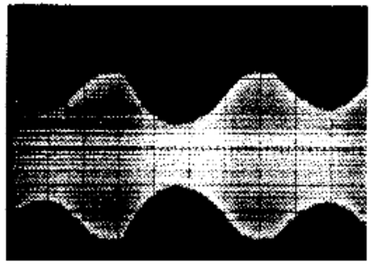

d. Head correctly aligned at CYL 105. Null amplitudes are equal.

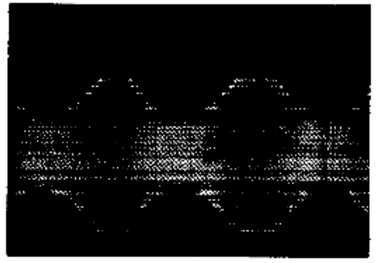

e. Head slightly misaligned. Larger left null indicates head position more than CYL 105.

error = +26%

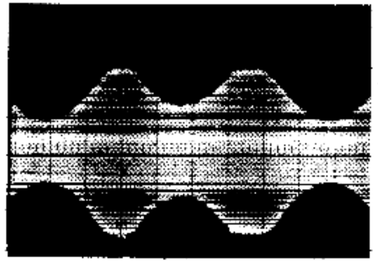

f. Head considerably misaligned. Larger left null indicates head position more than CYL 105.

error = +71%

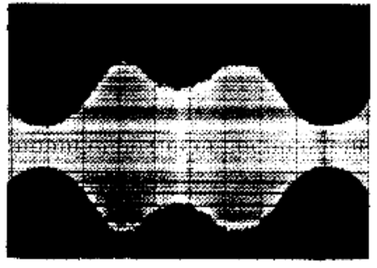

g. Large misalignment. Head close to CYL 106. (Further misalignment only reduces amplitude of peak.)

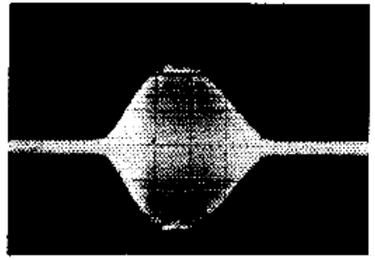

NOTE

To calculate % of error, use the following expression:

$$\% \text{ error} = \frac{x_1 - x_2}{x_1 + x_2} \times 100$$

x = null amplitudes and the resultant sign denotes the direction of error. A negative (−) sign indicates that the head is too far from center (track less than 105).

Figure 6-12 2315 CE Pack Head Alignment Waveforms

b. Set the exerciser Function knob to OSC.

c. Quickly set the exerciser RUN toggle switch to RUN and back to the down position; observe the linear positioner moves to cylinder 105 and stops.

8. Observe a single timing pulse followed by data which lags the timing pulse by 10 μs (the timing pulse may be either positive or negative going).

9. Expand the scope sweep time to 10 μs/div and check that the single pulse occurs 70 ± 10 μs from the start of the sweep (Figure 6-13).

10. Set exerciser Head Select toggle switch to UPPER; observe the same pulse tolerances as in step 9, above. If necessary, adjust R6 on the M7700 card (card position 2) until the average time for the two pulses is 70 μs and the 70 ± 10 μs individual pulse requirement is maintained. If these requirements cannot be achieved, perform either of the following corrective actions:

    a. If the time difference of the two timing pulses exceeds 20 μs, replace one of the heads to reduce the difference. Once the difference is within tolerable limits, readjust R6 to achieve an average 70 μs between the peaks.

    b. If the average of the peaks cannot be adjusted to 70 μs, relocate the sector transducer to the right (if the average is too high) or to the left (if the average is too low). Readjust R6 to achieve 70 μs between peaks.

6.2.5.2 2315 CE Pack. The procedure for adjusting index/sector timing using the 2315 CE pack is as follows:

1. Perform the RK05 Exerciser set-up procedure (Paragraph 2.2).

2. Install a 2315 CE test cartridge on the spindle and operate the drive in the run mode for at least 30 minutes. This must be done to allow the CE cartridge and the drive components to achieve thermal stabilization.

3. Using the WR PROT switch, place the drive in the write protect condition.

4. Set the oscilloscope controls as follows:

- vertical
  - mode = ADD (invert CHAN 2)
  - sensitivity = 0.2 V/div
  - coupling = dc
- sweep
  - A sweep
  - time = 10 ms/div
  - trigger = normal
- trigger
  - source = external*
  - coupling = ac
  - slope =

*Use a 1:1 probe to connect the scope external trigger input to A02R2 (INDEX).

5. Connect the channel 1 probe to TP3 and the channel 2 probe to TP4 of the G180 card. (Use 10:1 probes.)

6. Set the exerciser front panel RTZ toggle switch to RTZ; observe the linear positioner moves to cylinder 0 and stops.

7. Select cylinder 100 as follows:

    a. Set the exerciser Cylinder Address-64, 32, and 4 toggle switches to 1 and all other Cylinder Address toggle switches to 0 (Cylinder Address 100).

    b. Set the exerciser Function knob to OSC.

    c. Quickly set the exerciser RUN toggle switch to RUN and back to the down position; observe the linear positioner moves to cylinder 100 and stops.

8. Monitor the scope for a single pulse followed by a 1 ms burst of data

9. Expand the sweep time to 10 μs/div and check that the single pulse occurs 70 ± 10 μs from the start of the sweep (Figure 6-13) (this pulse may be either positive or negative going).

10. Set the exerciser Head Select toggle switch to UPPER; observe scope for same pulse tolerances as step 10. If necessary, adjust R6 on the M7700 card (card position 2) until the average time for the two pulses is 70 μs and the 70 ± 10 μs individual pulse requirements is maintained.

Figure 6-13 Index/Sector Waveform

6.2.6 Cartridge Receiver Alignment

Prior to shipment of the RK05 Disk Drive, the cartridge receiver is precisely aligned at the factory. Since it is not necessary to disturb the receiver alignment when performing any of the field maintenance procedures, cartridge receiver alignment is therefore not normally required in the field. However, if the duckbill, airduct, or cartridge support post are replaced, the cartridge receiver alignment must be checked. In addition, the Cartridge-On switch should also be checked for proper operation.

NOTE

The duckbill on later model drives is slightly different than the earlier models. If an earlier version duckbill is replaced with the later version, the airduct and cartridge support posts must also be replaced. Refer to the *RK05 Illustrated Parts Manual* (DEC-RK05-IPB-1) to identify which duckbill version is being replaced.

1. Slide the drive out of the rack and remove the top and bottom covers.

2. Insert a cartridge into the receiver and close the drive front door.

3. Check for a .020 to .040 in. clearance (A) between the plastic cartridge case and the receiver rails (Figure 6-14). Make this measurement towards the rear of the receiver at a point where the plastic cartridge case passes over the intersecting receiver rails.

4. If the (A) clearance is incorrect, loosen the pivot post lock nuts and adjust the height of both posts to obtain the proper clearance. Hold the pivot post at (x) with an adjustable wrench while loosening and tightening the lock nuts (y).

5. Lightly tighten the pivot post lock nuts and check the following (Figure 6-15):

   a. Remove the cartridge and ensure that the clearances (B) between the upper receiver rails and the cartridge channel are equal, and that the receiver rails are as parallel as possible to the channel.

   b. Push the receiver all the way to one side and ensure that there is a slight clearance (C) of .010 to .040 in. between the pivot post and the receiver hinge rail. When making this check, do not push the receiver so hard that the pivot posts twist.

   c. Push the receiver to the left and right and ensure that the front receiver rail does not touch either side of the chassis.

6. Tighten the pivot post lock nuts and recheck all clearances. There must be a clearance at points A, B, and C; however, it is especially critical that clearances A and C do not exceed the limits indicated in Figures 6-14 and 6-15.

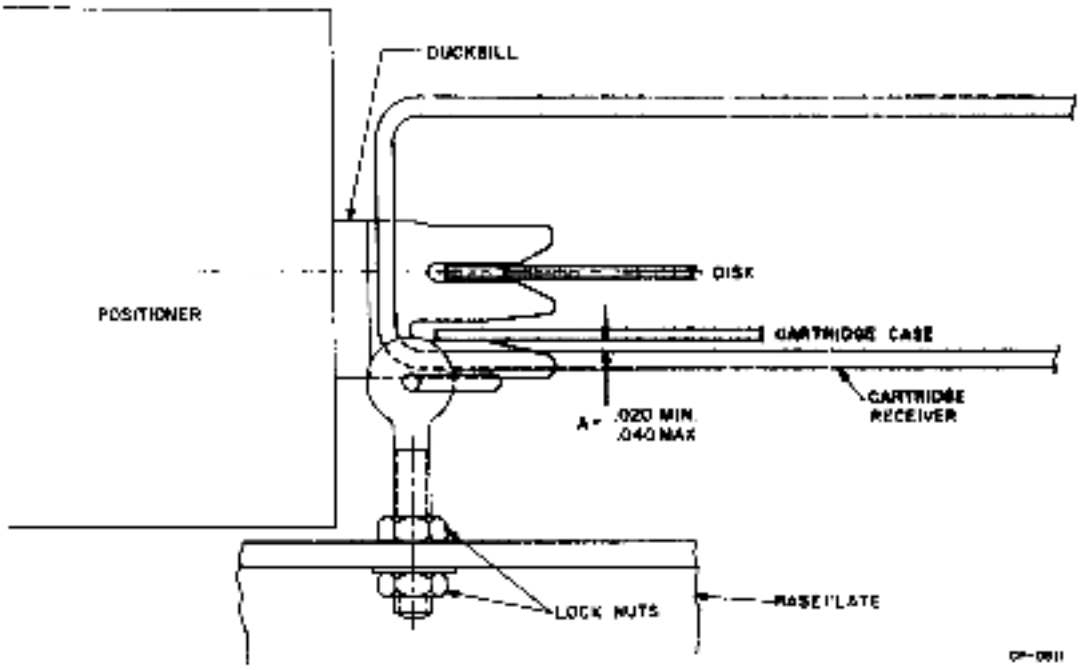

Figure 6-14 Cartridge to Receiver Clearance

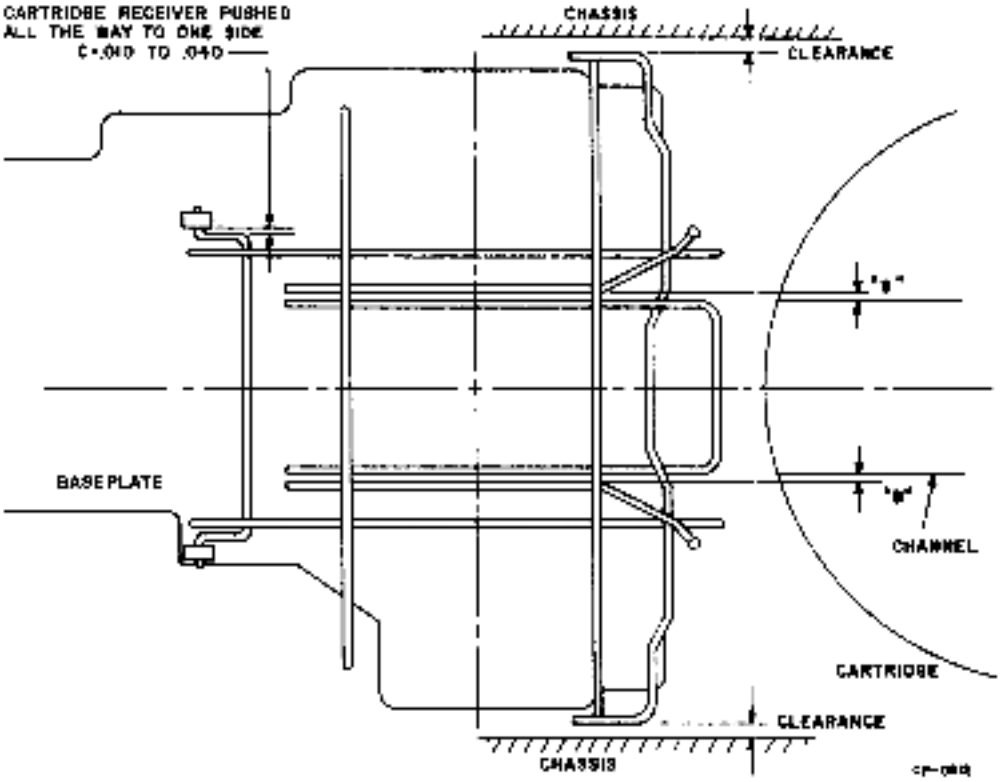

Figure 6-15 Cartridge Receiver Clearances

7. Check for the following points of contact between the cartridge and the cartridge receiver, which indicate that the cartridge is properly seated:

   a. Two thin rails (These should either touch evenly or be parallel along the full length of the cartridge.)

   b. Two cartridge posts

   c. Access door opener bail

   d. Spring at top center of cartridge

   e. Duckbill (lower slot)

   f. Airduct bridge

   g. Airduct foam seal.

8. Check for the following points of clearance between the cartridge and the cartridge receiver, which indicate that the cartridge is properly seated:

   a. Two fat rails on top of the cartridge

   b. Four crosspoints on the underside of the cartridge

   c. The pivot posts and receiver hinge bail.

   The position of the pivot posts determines how the top rails ride on the cartridge and also determines the bottom clearance of the four crosspoints and the underside of the carriage.

APPENDIX A
IC SCHEMATICS

The RK05 Exerciser employs several types of integrated circuit (IC) chips in its design. This appendix provides detailed schematics, packaging diagrams and truth tables on several of the more complex ICs as a maintenance aid to the service technician.

The following ICs are covered in this appendix:

7442	4-LINE-TO-10 LINE DECODERS
7474	DUAL D-TYPE EDGE TRIGGERED FLIP-FLOPS
74123	MONOSTABLE MULTIVIBRATOR
74193	SYNCHRONOUS 4-BIT UP/DOWN COUNTER (DUAL CLOCK WITH CLEAR)

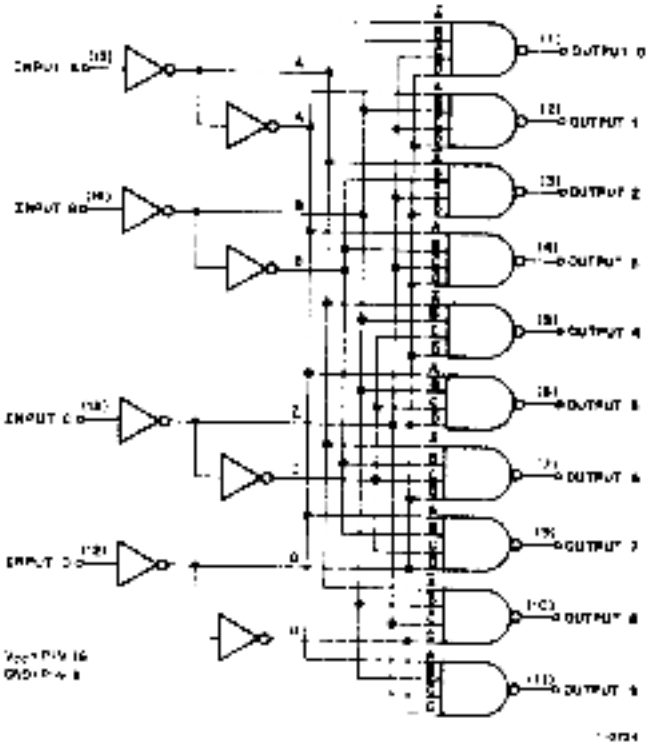

A.1 7442 4-LINE-TO-10-LINE DECODERS

TRUTH TABLE

BCD Input				Octal Output									
D	C	B	A	0	1	2	3	4	5	6	7	8	9
0	0	0	0	0	1	1	1	1	1	1	1	1	1
0	0	0	1	1	0	1	1	1	1	1	1	1	1
0	0	1	0	1	1	0	1	1	1	1	1	1	1
0	0	1	1	1	1	1	0	1	1	1	1	1	1
0	1	0	0	1	1	1	1	0	1	1	1	1	1
0	1	0	1	1	1	1	1	1	0	1	1	1	1
0	1	1	0	1	1	1	1	1	1	0	1	1	1
0	1	1	1	1	1	1	1	1	1	1	0	1	1
1	0	0	0	1	1	1	1	1	1	1	1	0	1
1	0	0	1	1	1	1	1	1	1	1	1	1	0
1	0	1	0	1	1	1	1	1	1	1	1	1	1

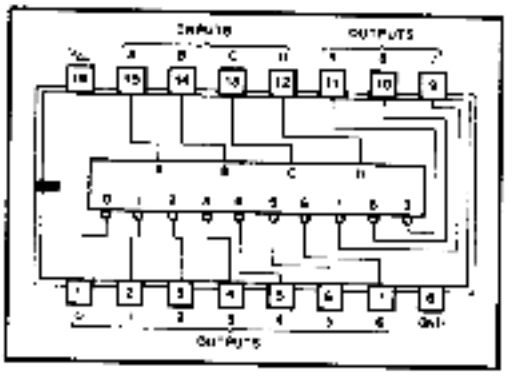

Figure A-1 7442 Package and Logic Diagrams

A.2 7474 DUAL D-TYPE EDGE-TRIGGERED FLIP-FLOPS

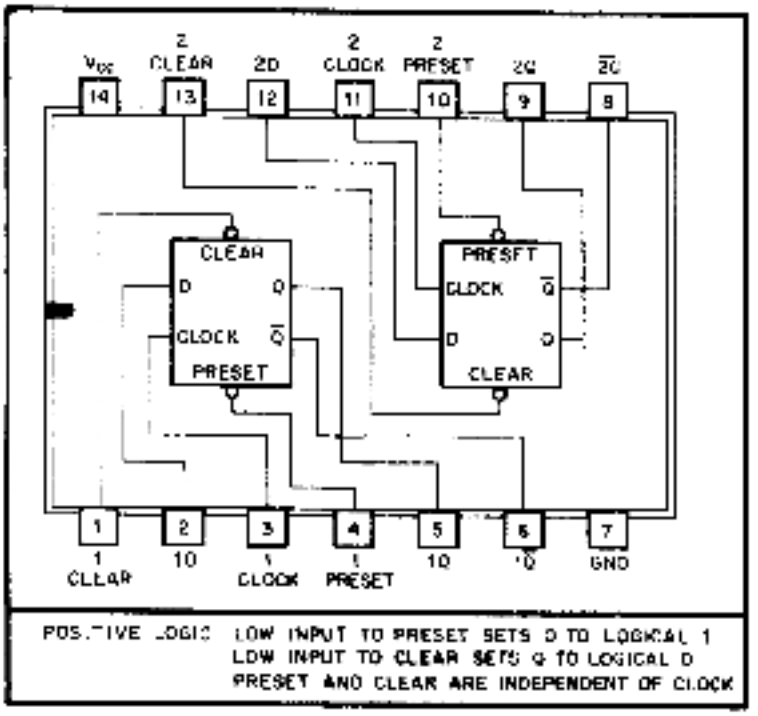

Truth Table (Each Flip-Flop)

t_n		t_{n+1}
Input D	Output Q	Output Q
0	0	1
1	1	0

Notes: 1. t_n = bit time before clock pulse
2. t_{n+1} = bit time after clock pulse.

A.3 74123 MONOSTABLE MULTIVIBRATOR

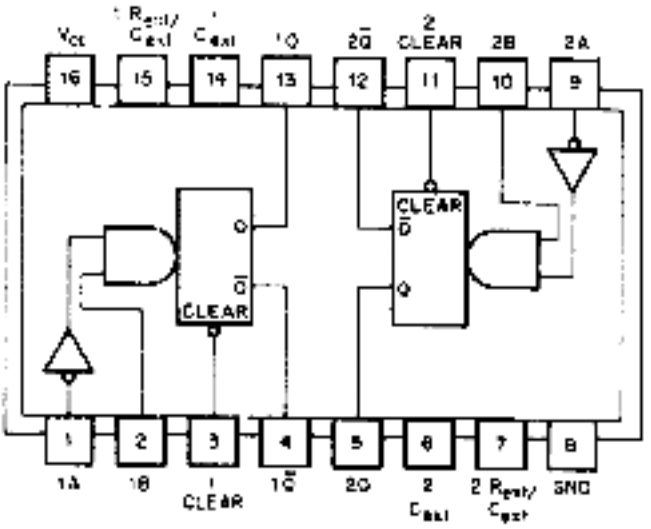

FUNCTIONAL LOGIC/PIN LOCATOR

TRUTH TABLE

INPUTS		OUTPUTS	
A	B	Q	Q̄
H	X	L	H
X	L	L	H
L	↑	⎍	⎏
↓	H	⎍	⎏

NOTE H = high level (steady state), L = low level (steady state), ↑ = transition from low to high level, ↓ = transition from high to low level, ⎍ = one high-level pulse, ⎏ = one low-level pulse, X = irrelevant (any input, including transitions)

BE 35 A

Figure A-2 DEC 74123 IC Illustrations

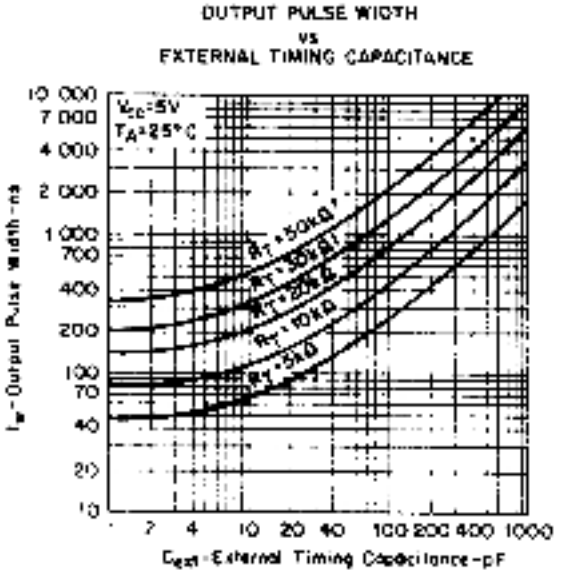

Figure A-3 DEC 74123 IC Output Pulse Width vs. External Timing Capacitance

A.4 74193 SYNCHRONOUS 4-BIT UP/DOWN COUNTER (DUAL CLOCK WITH CLEAR)

J OR N DUAL-IN-LINE PACKAGE (TOP VIEW)

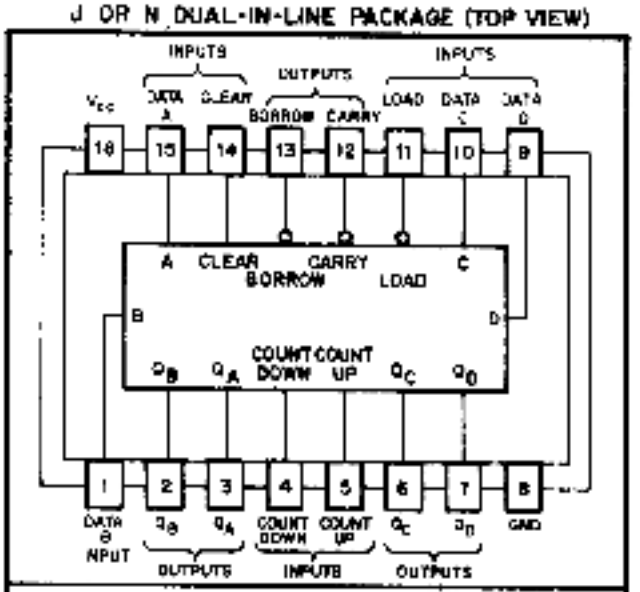

LOGIC: LOW INPUT TO LOAD SETS $Q_A = A$, $Q_B = B$, $Q_C = C$, AND $Q_D = D$

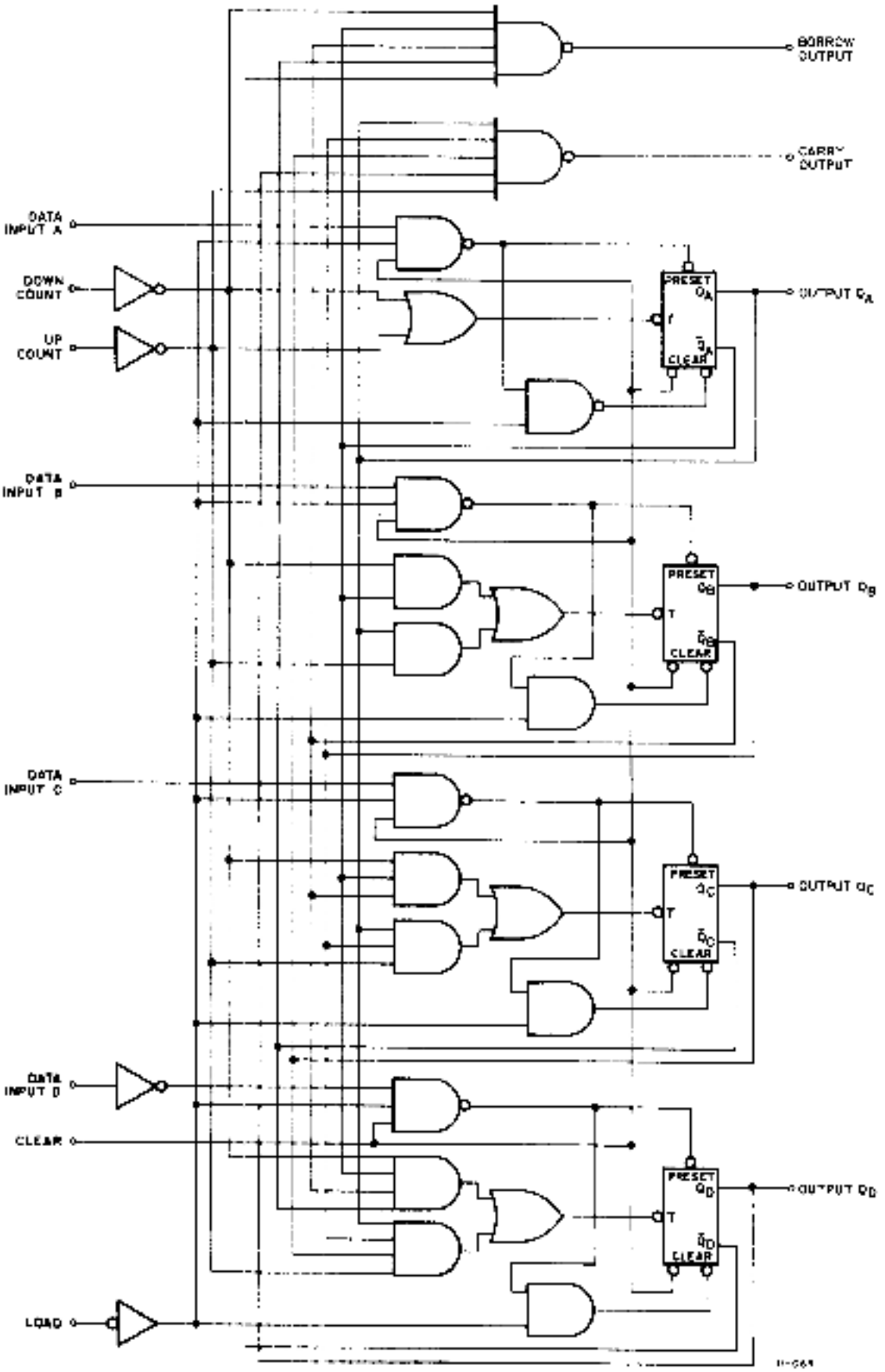

Figure A-4 74193 Logic Diagram

APPENDIX B
ENGINEERING DRAWING SET

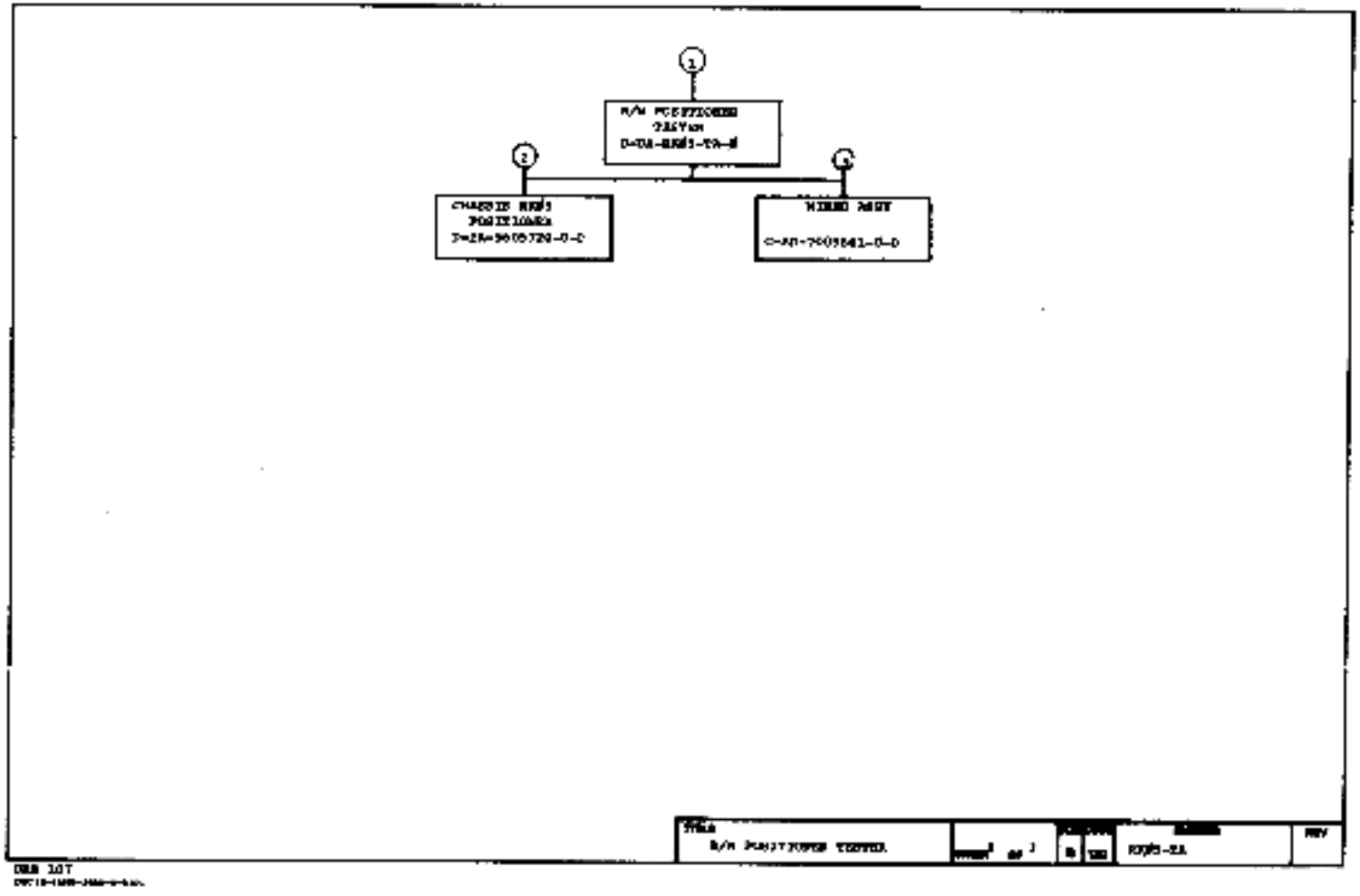
1
2
3
R/W POSITIONER TESTER
CHASSIS RR#5 POSITIONER
WIRED ASSY
R/W POSITIONER TESTER
RR#5-TA
REV

EQUIPMENT CORPORATION

DRAWING DIRECTORY

CUSTOMER PRINT SET INDEX

THIS IS PRINT SET

DRAWING DIRECTORY	D-[illegible]-[illegible]-[illegible]
R/M POSITIONER TESTER	[illegible]
CABLE POWER	D-[illegible]-[illegible]-[illegible]
[illegible]	[illegible]
FINISH DIAGRAM	D-[illegible]-[illegible]-[illegible]
[illegible]	[illegible]
[illegible]	[illegible]

UNIT VARIATIONS	
VAR	TITLE
[illegible]	R/M POSITIONER TESTER

USED ON OPTIONS/MODEL	DWN. J. DEVIN	DATE 10/11/73	TITLE R/M POSITIONER TESTER
[illegible]	CHK'D. J. [illegible]	DATE 10/11/73	
	[illegible]	DATE 7/8/74	
	[illegible]	DATE 7/8/74	SIZE B / CODE DD / NUMBER [illegible] / REV
SHEET 1 OF 1	[illegible]	DATE 7/8/74	DIST

REVISIONS: REV / CHK. NO / DATE

ELECTRICAL

Electronic Parts Set	Spec. Set	Item No.	Drawing No.	Rev	No. of Unit	Description	Option No./Title Date
	X		[illegible]		3	R/W POSITIONER TESTER	
	X		[illegible]		1	[illegible] PACK TESTER POSITIONER/[illegible]	
	X		[illegible]		1	TIMING DIAGRAM	
	X		[illegible]		11	[illegible] OPERATORS GUIDE	
	X	3	[illegible]		1	[illegible] ASSY	

MECHANICAL

Component Parts Set	Spec. Set	Item No.	Drawing No.	Rev	No. of Unit	Description	Option No./Title Date
	X	1	[illegible]		2	R/W POSITIONER TESTER	
	X		[illegible]		1	CABLE, POWER	
			[illegible]		1	VAULT, PANEL	
			[illegible]		1	SILK SCREEN	
		2	[illegible]		2	CHASSIS [illegible] POSITIONER	
			[illegible]		1	FRAME CASTING [illegible]	
	X	1	[illegible]		1	[illegible]	

Component Parts Set Codes:
A — Part of document included in Item No.
C — Includes all parts indicated on document
S — Continental [illegible]

Title: R/W POSITIONER TESTER

Sheet 2 of 1

Drawing: [illegible]

Rev

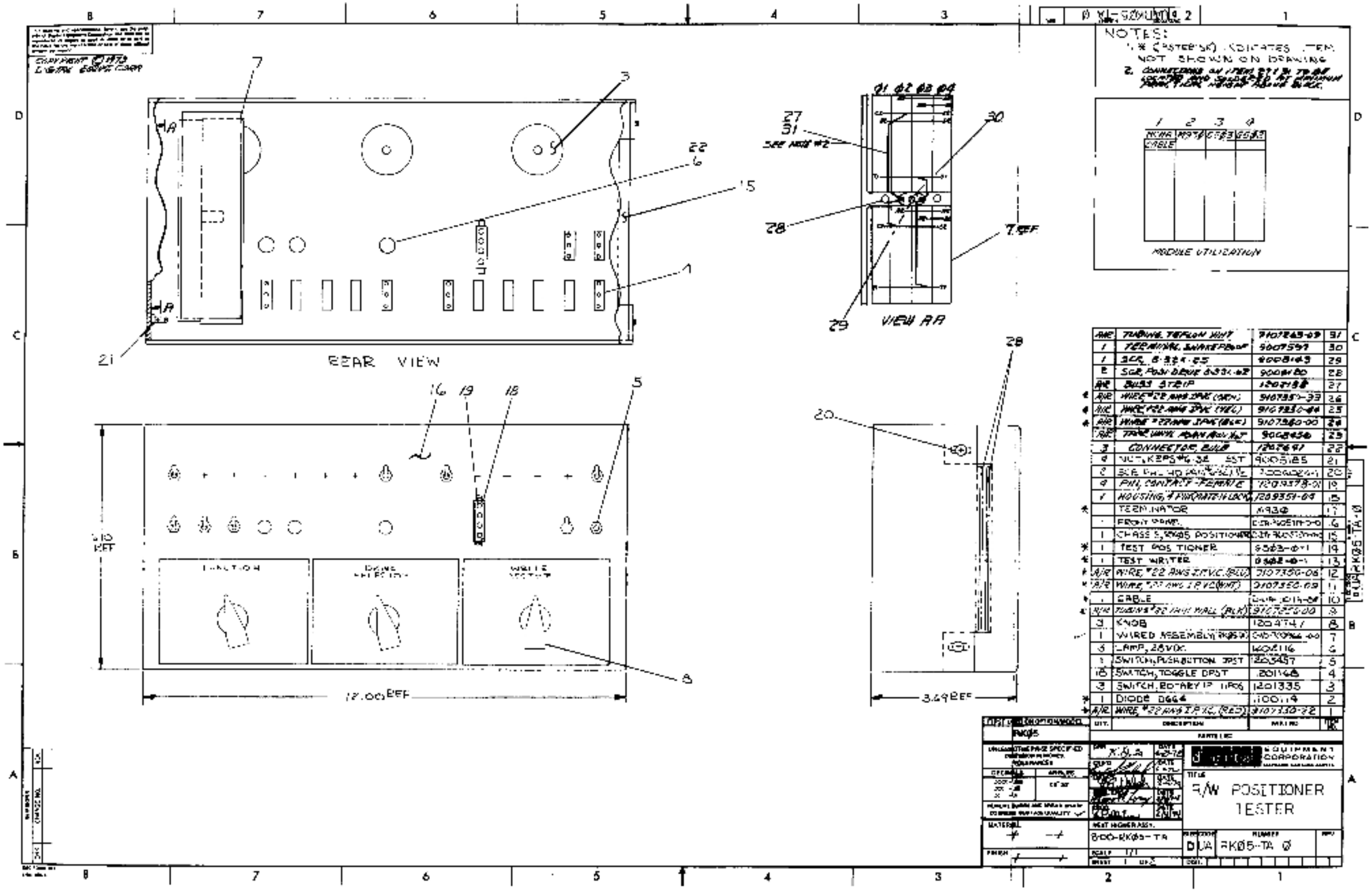

QTY.	DESCRIPTION	PART NO.	ITEM NO.
AR	TUBING, TEFLON JUST	9107243-09	31
1	TERMINAL, SHRINKPROOF	9007599	30
1	SCR, 8-32x.25	9008149	29
2	SCR, POS-DRIVE 6-32x.62	9008180	28
AR	BUSS STRIP	1207198	27
* AR	WIRE #22 AWG 2PVC (GRN)	9107359-33	26
* AR	WIRE #22 AWG 2PVC (YEL)	9107330-44	25
* AR	WIRE #22 AWG 2PVC (BLK)	9107360-00	24
AR	TUBE WIRE ADAPTOR KIT	9008456	23
3	CONNECTOR, BULB	1207691	22
4	NUT, KEPS #6-32 SST	9005185	21
2	SCR, PHL HD (AN/MS) 1/2	7000824-1	20
4	PIN, CONTACT FEMALE	1209378-01	19
1	HOUSING, 4 FUNCTION LOCK	1209351-04	18
*	TERMINATOR	X934	17
-	FRONT PANEL	D3R-9051170-0	16
1	CHASSIS, RKØ5 POSITIONER	D3R-9051170-0	15
* 1	TEST POSITIONER	9563-001	14
* 1	TEST WRITER	9562-001	13
* AR	WIRE #22 AWG 2PVC (BLU)	9107350-06	12
* AR	WIRE #22 AWG 2PVC (WHT)	9107352-09	11
* 1	CABLE	D3R-9011-04	10
* AR	TUBING #22 AWG WALL (BLK)	9107329-00	9
3	KNOB	1204741	8
1	WIRED ASSEMBLY (RKØ5)	D3R-9009-00	7
3	LAMP, 28VDC	1400116	6
1	SWITCH, PUSHBUTTON DPST	1203457	5
18	SWITCH, TOGGLE DPST	1201148	4
3	SWITCH, ROTARY 1P 11POS	1201335	3
* 1	DIODE D664	1100114	2
* AR	WIRE #22 AWG 1PVC (RED)	9107330-22	1

NEXT HIGHER ASSY. D3R-RKØ5-TA

SCALE 1/1

SHEET 1 OF 2

TITLE RW POSITIONER TESTER

SIZE D CODE 1A NUMBER RKØ5-TA Ø REV

WIRE TABLE

ITEM NO	DESCRIPTION COLOR	DESCRIPTION AWG	FROM CONN	FROM WITH	TO CONN	TO WITH	REMARKS
25	YEL	#22	S1-NC	SOLDER	A3L1	SOLDER	
			S2-NC		A3M1		
			S3-NC		A3N1		
			S4-NC		A3P1		
			S5-NC		A3R1		
			S6-NC		A3S1		
			S7-NC		A3U1		
			S8-NC		A3V1		
			S9-NC		B9V2		
			S10-NC		B9T2		
			S9-C		B9T1		
			S10-C		B9P2		
			S11-NO		B9C1		
			S11-C		A9D1		
			S12-C		A9C1		
			S13-C		A9B1		
			S14-C		A9A1		
			S15-NC		A3A1		
			S15-C		S16-NC		
			S16-NO		A3B1		
			S17-NC		A3E1		
			S17-NO		A3D1		
			S18-C		B1M2		
			S19-NC		B4A1		
			S19-NC		B9E1		
			S20-1		A3H2		
			S20-2		—		
			S20-3		B3F2		
			S20-4		A3K2		
			S21-1		A1J2		
			S21-2		A1K2		
			S21-3		A1L2		
25	YEL		S21-4		A1M2		
24	BLK		S21-C		GND		
24	BLK		S22-1		GND		
25	YEL		S22-2		A9H1		
			S22-3		A9J1		
			S22-4		A9K1		
25	YEL	#22	S22-5	SOLDER	A9L1	SOLDER	

WIRE TABLE

ITEM NO	DESCRIPTION COLOR	DESCRIPTION AWG	FROM CONN	FROM WITH	TO CONN	TO WITH	REMARKS
25	YEL	#22	S22-6	SOLDER	A9N1	SOLDER	
			S22-7		A9P1		
			S22-8		A9R1		
			S22-9		A9S1		
			S22-10		A9U1		
			S22-11		A9V1		
			S22-C		B9D1		
			I1-A		B3H1		
25	YEL		I2-A		B3F2		
24	BLK		I3-A		S6-C		
25	YEL		I1-B		I3-B		
25	YEL		I2-B		I2-A		
25	YEL		I3-B		I3-A		
24	BLK		S1-C		S2-C		
			S2-C		S3-C		
			S3-C		S4-C		
			S4-C		S5-C		
			S5-C		S6-C		
			S6-C		S7-C		
			S7-C		S8-C		
			S8-C		S9-NO		
			S9-NO		S10-NC		
			S10-NO		S11-NO		
			S11-NO		S12-NO		
			S12-NO		S13-NO		
			S13-NO		S14-NO		
			S14-NO		S15-NC		
			S15-NC		S16-NC		
			S16-NC		S17-NC		
			S17-NC		S18-C		
			S18-C		S19-C		
			S19-C		S20-NO		
			S17-C		S16-C		
			S20-C		S21-C		
24	BLK		B9C1		GND		
1	RED		A9A2		B9B2		
11	WHT		A9C2		B9C2		
12	BLU		A9B2		B9B2		
24	BLK		S21C		S22-1		
24	BLK	#22	S22-1	SOLDER	GND	SOLDER	

EXTERNAL COMPONENT LIST

ITEM NO	DESCRIPTION	POL	FROM	WITH	POL	TO	WITH	REMARKS
2	DIODE	+	S20-1	ITEM #9	−	S20-4	ITEM #9	

24	BLK	#22	J1-1	ITEM #10	GND	SOLDER	
12	BLU	#22	J1-4		A9B2	SOLDER	
25	YEL	#22	J1-3		J1-5	SOLDER	
1	RED	#22	J1-2		A9A2	SOLDER	
26	ORN	#22	J1-2	ITEM #9	A9D2	SOLDER	

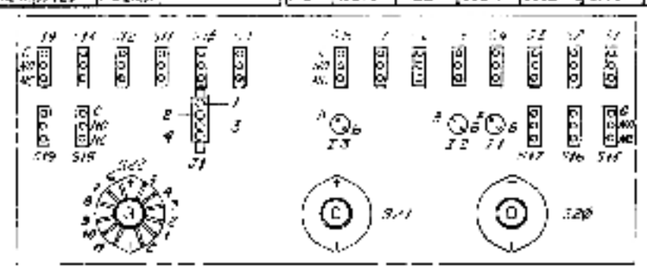

REAR VIEW

FIRST USED ON OPTIMIZATION	QTY.	DESCRIPTION	PART NO
RK05			

TOLERANCES

DIGITAL EQUIPMENT CORPORATION

TITLE: R/W POSITIONER TESTER

MATERIAL

NEXT HIGHER ASSY. B-DD-RK05-1A

SCALE NONE

SHEET 2 OF 2

SIZE D | CODE LA | NUMBER RK05-1A-0 | REV.

COPYRIGHT © 1973 DIGITAL EQUIPMENT CORPORATION

LEGEND		
NUMBER	DIM 'X' VARIATION	DIM 'Y' (PRECUT) REF
9606036-00	6 FEET ± 2 IN	6 FEET ± 1 IN

WIRE TABLE							
ITEM NO.	DESCRIPTION COLOR	AWG	FROM CONN	FROM WITH	TO CONN	TO WITH	REMARKS
9	ORN	#18	P2-1	ITEM #4	P1-3	ITEM #4	
					J1-1	ITEM #5	
8	BLU	#18	P2-2		P1-4	ITEM #4	
					J1-2	ITEM #5	
7	RED	#18	P2-3		P1-2	ITEM #4	
					J1-3	ITEM #5	
10	BLK	#18	P2-4		P1-1	ITEM #4	
					J1-4	ITEM #5	
13	VIO	#22	P2-5		J1-5	ITEM #5	
11	YEL	#22	P2-7		J1-7	ITEM #5	
12	GRN	#22	P2-6	ITEM #4	J1-6	ITEM #5	

NOTES:

1. ALL WIRES GOING FROM P2-1 TO P2 2.25 IN. LONG ± .25 IN.

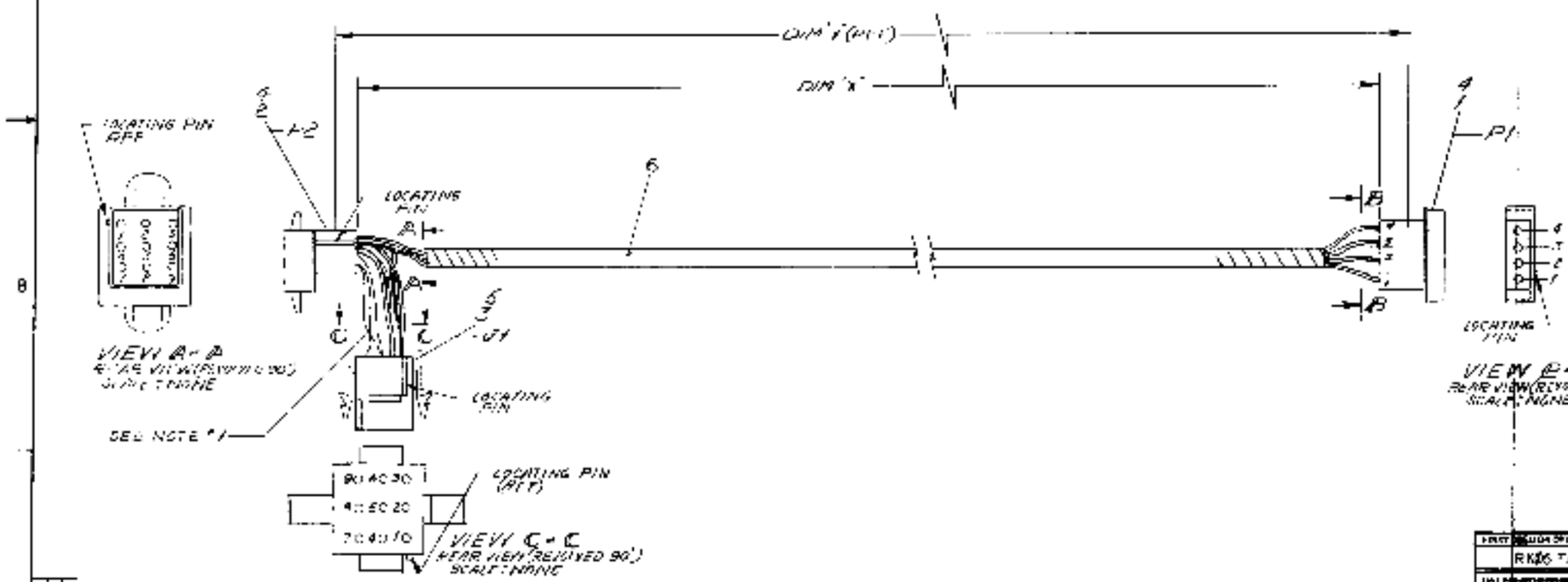

QTY	DESCRIPTION	PART NO	ITEM NO.
R/R	WIRE, #22 AWG VPVC (BLK)	9101550-77	13
R/R	WIRE, #22 AWG VPVC (GRN)	9101550-55	12
R/R	WIRE, #22 AWG VPVC (YEL)	9101550-49	11
R/R	WIRE, #18 AWG VPVC (RED)	9101550-00	10
R/R	WIRE, #18 AWG VPVC (BLK)	9101550-55	9
R/R	WIRE, #18 AWG VPVC (BLU)	9101550-66	8
R/R	WIRE, #18 AWG VPVC (ORN)	9101550-72	7
R/R	WRAP, SPIRAL .25 IN	9107290-3	6
7	PIN, MATE-N-LOCK (FEMALE)	120837-001	5
11	PIN, MATE-N-LOCK (MALE)	120837-11	4
1	HOUSING, MATE-N-LOCK	120837-09	3
1	HOUSING, MATE-N-LOCK	120837-03	2
1	HOUSING, MATE-N-LOCK	120837-04	1

PARTS LIST

NEXT ASSY: RKØ5-TA

TOLERANCES

MATERIAL: SEE PARTS LIST

NEXT HIGHER ASSY: D UA RKØ5-TA

digital EQUIPMENT CORPORATION

TITLE: CABLE, POWER (RKØ5-TA)

SIZE D | CODE IA | NUMBER 9606036-0-0 | REV

B-9

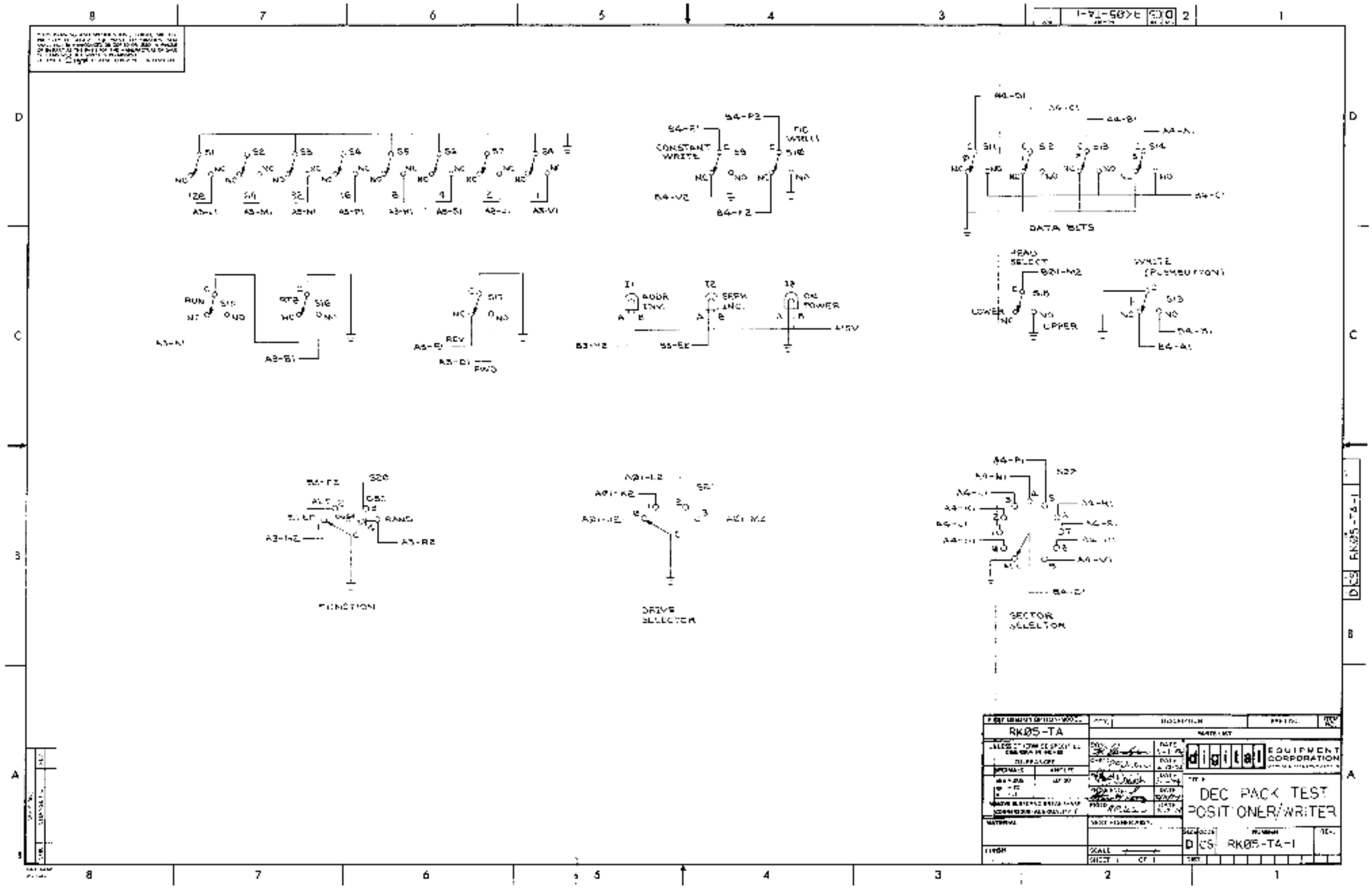
CONSTANT WRITE
DIC WRITE
DATA BITS
READ SELECT
WRITE (PUSHBUTTON)
LOWER
UPPER
RUN
ADDR INV.
SERV. INC.
ON POWER
REV
FWD
FUNCTION
DRIVE SELECTOR
SECTOR SELECTOR
RK05-TA
DEC PACK TEST
POSITIONER/WRITER
RK05-T4-1

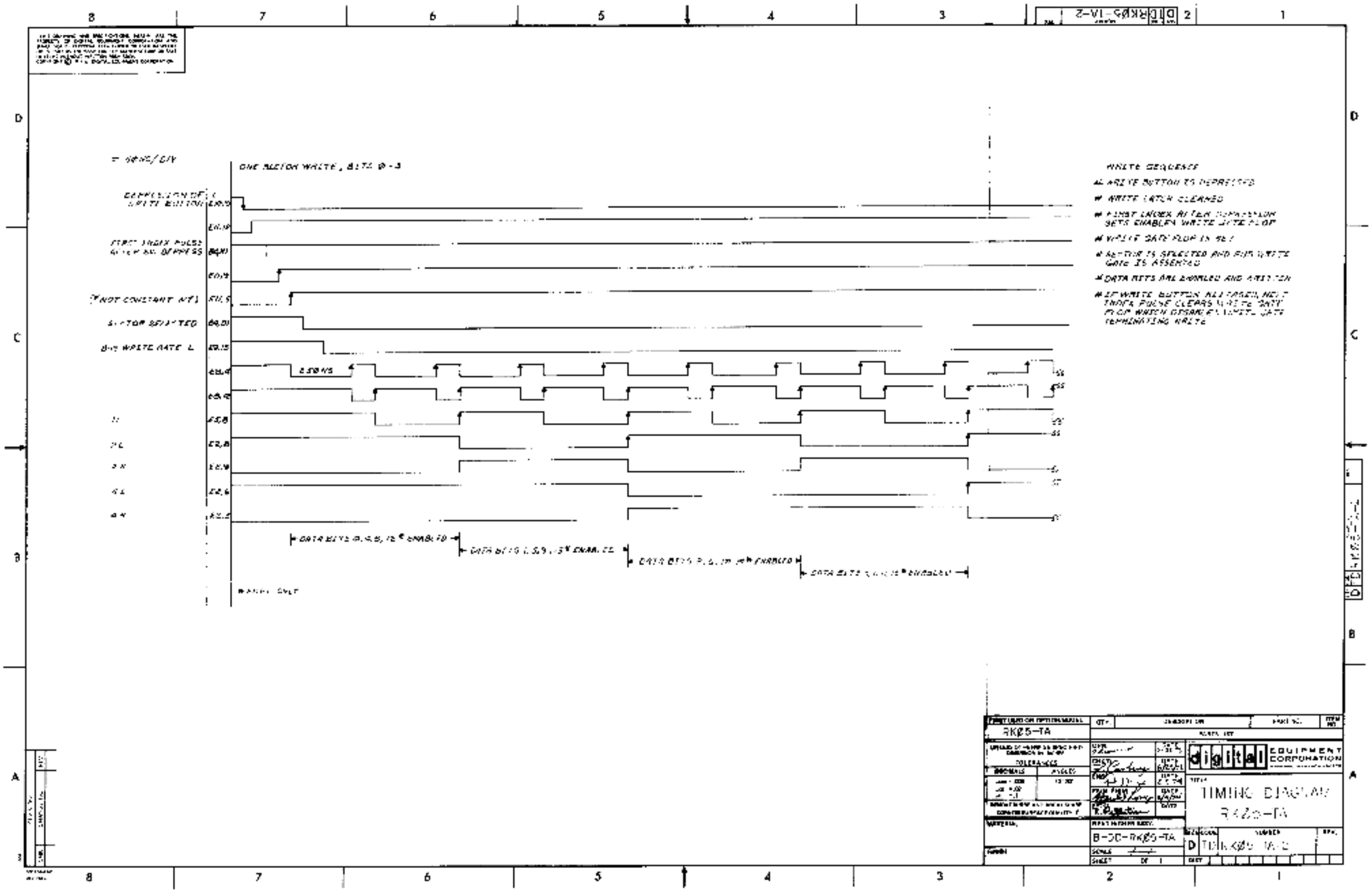
ONE SECTOR WRITE, BITS 0-3
WRITE SEQUENCE
RK05-TA
TIMING DIAGRAM
RK05-TA
digital EQUIPMENT CORPORATION

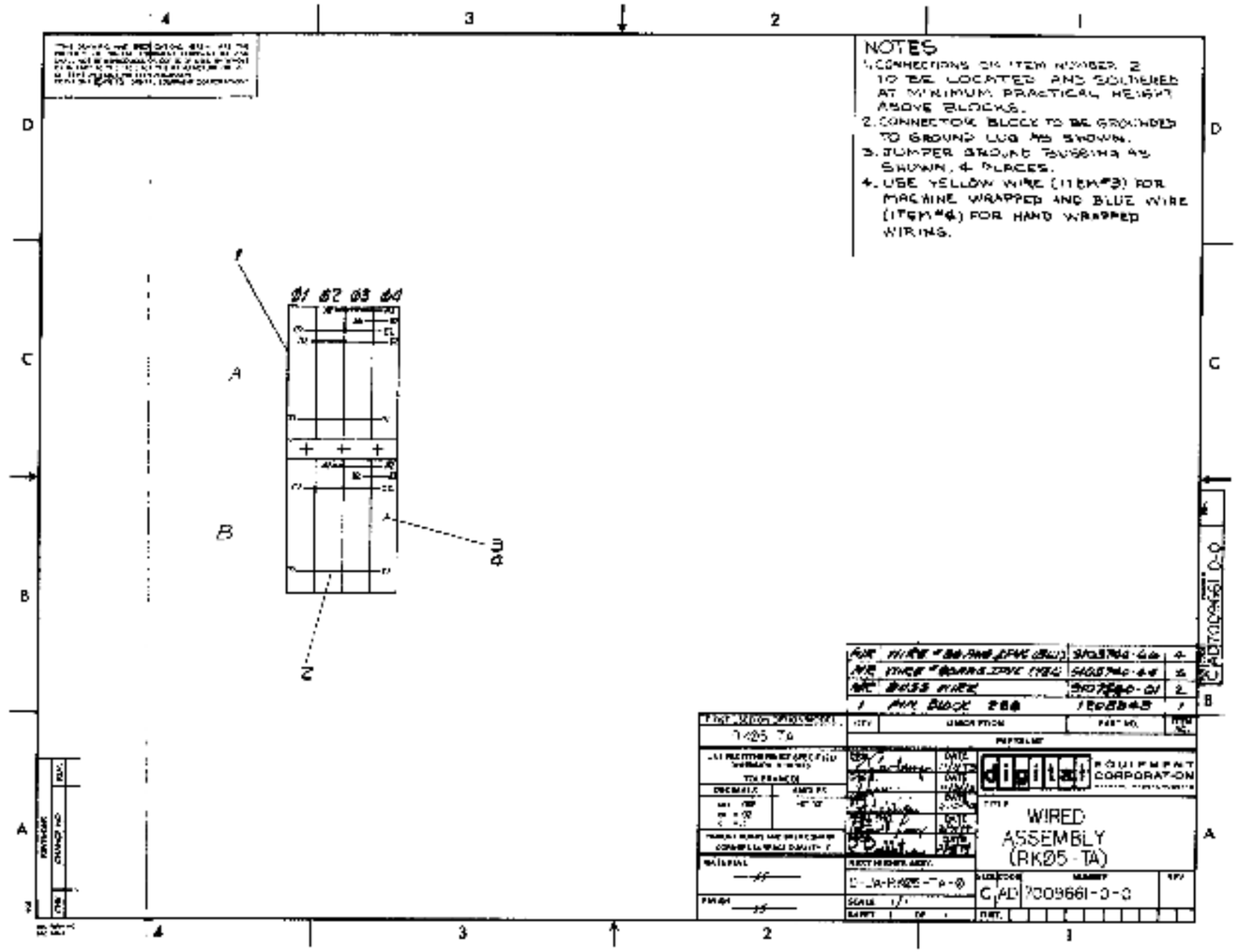
NOTES
1. CONNECTIONS ON ITEM NUMBER 2 TO BE LOCATED AND SOLDERED AT MINIMUM PRACTICAL HEIGHT ABOVE BLOCKS.
2. CONNECTOR BLOCK TO BE GROUNDED TO GROUND LUG AS SHOWN.
3. JUMPER GROUND BUSSING AS SHOWN, 4 PLACES.
4. USE YELLOW WIRE (ITEM #3) FOR MACHINE WRAPPED AND BLUE WIRE (ITEM #4) FOR HAND WRAPPED WIRING.
Ø1 Ø2 Ø3 Ø4
A
B
1
2
3
4
WIRED ASSEMBLY (RKØ5-TA)
digital EQUIPMENT CORPORATION
C AD 7009661-0-0

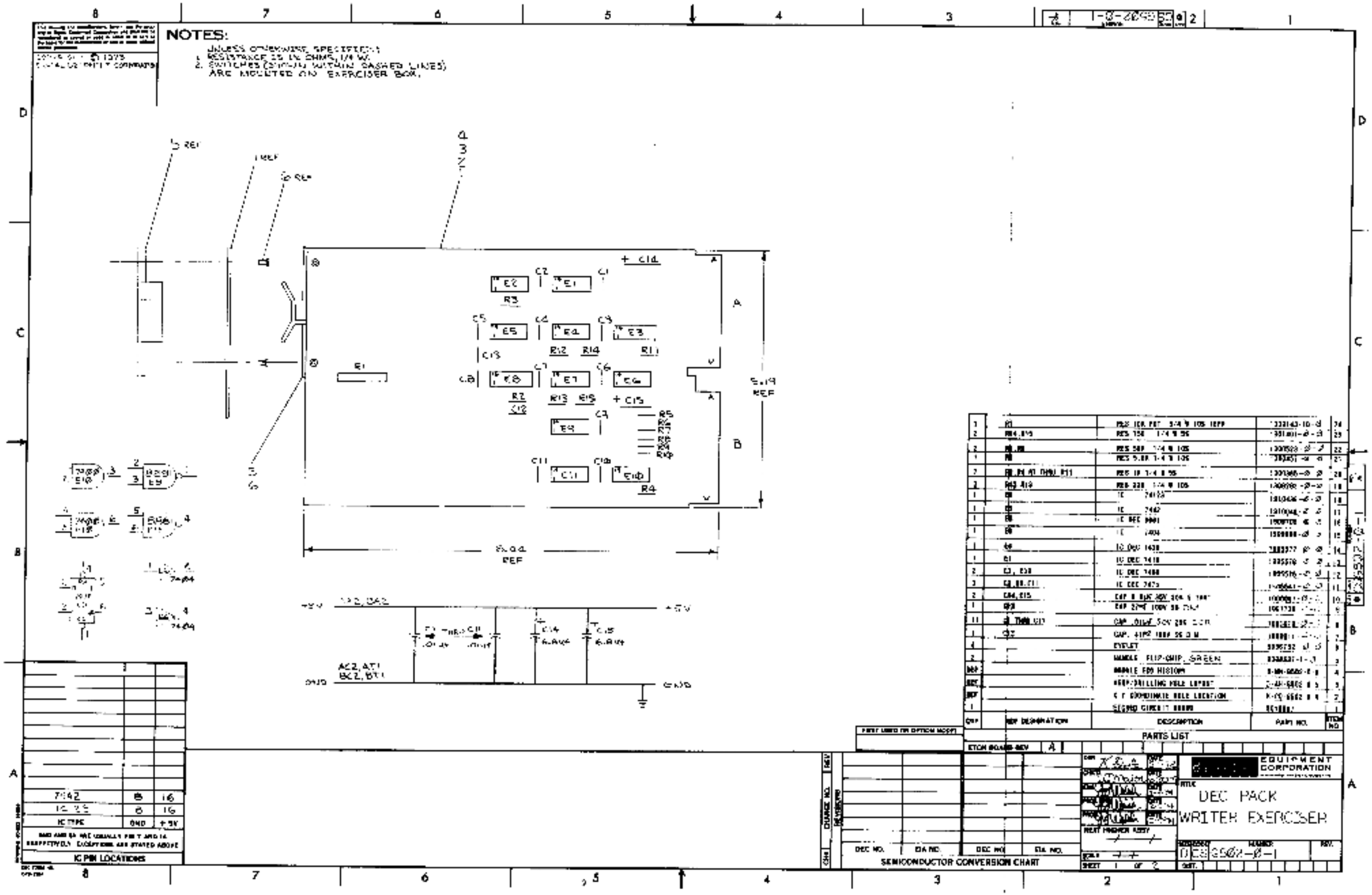
NOTES:
UNLESS OTHERWISE SPECIFIED:
1. RESISTANCE IS IN OHMS, 1/4 W.
2. SWITCHES (SHOWN WITHIN DASHED LINES) ARE MOUNTED ON EXERCISER BOX.
PARTS LIST
DEC PACK
WRITER EXERCISER
EQUIPMENT CORPORATION
IC PIN LOCATIONS
SEMICONDUCTOR CONVERSION CHART
B-15

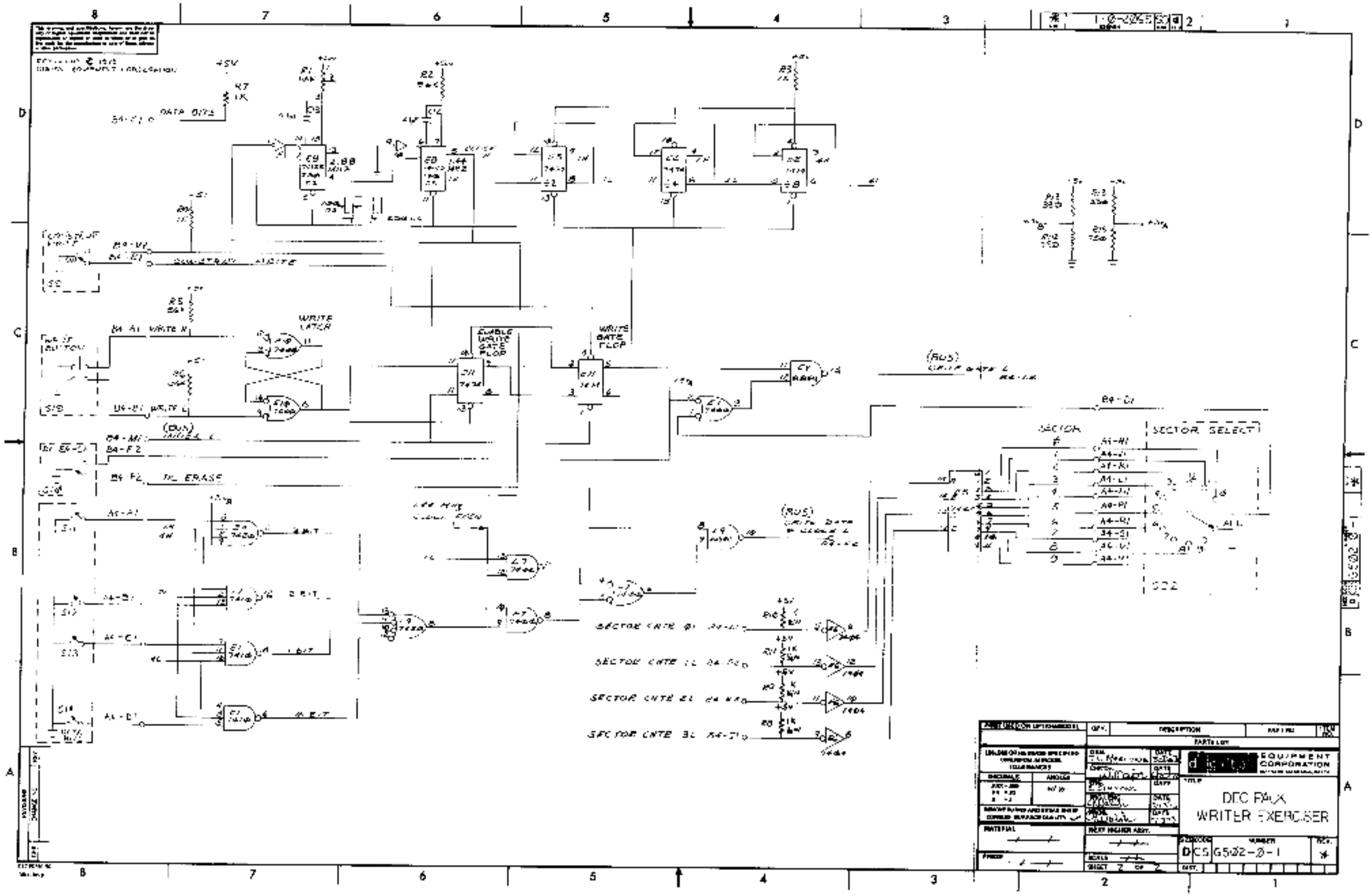
DATA BITS
WRITE LATCH
ENABLE WRITE GATE FLOP
WRITE GATE FLOP
(BUS)
SECTOR
SECTOR SELECT
SECTOR CNTR 0
SECTOR CNTR 1
SECTOR CNTR 2
SECTOR CNTR 3
EQUIPMENT CORPORATION
DEC PACK
WRITER EXERCISER
D CS G502-0-1

NOTES:

1. UNLESS OTHERWISE SPECIFIED:
RESISTANCE IS IN OHMS, 1/4 W ± 5%
CAPACITANCE IS IN UF, 50 V

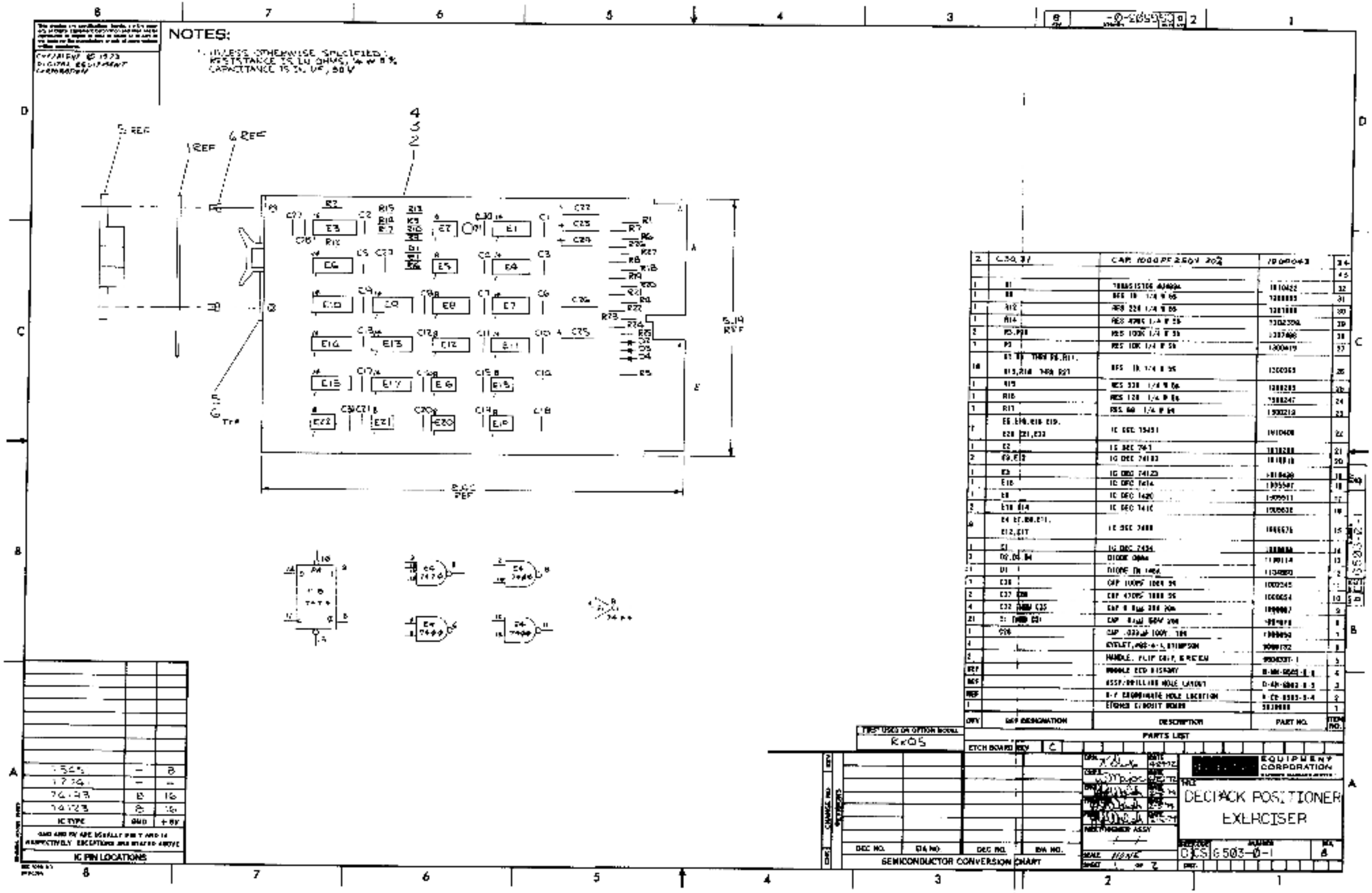

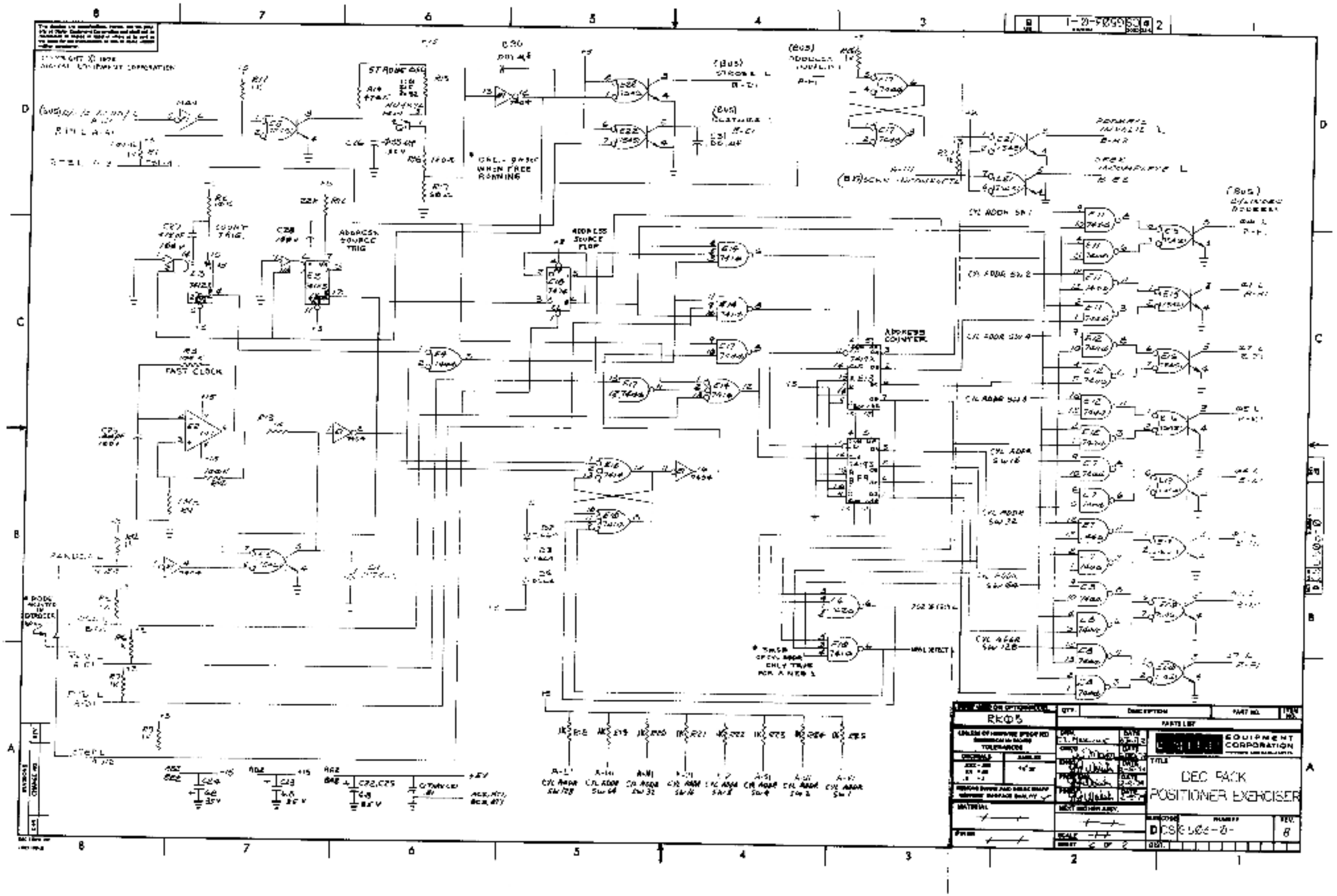

ADDRESS SOURCE TRIG
ADDRESS SOURCE FLOP
FAST CLOCK
ADDRESS COUNTER
RK05
EQUIPMENT CORPORATION
DEC PACK
POSITIONER EXERCISER

RK05 EXERCISER MAINTENANCE LOG

DATE	MAINTENANCE (Check One)		FAULT SYMPTOMS (If Any)	SOLUTION
	Preventive	Corrective		

RK05 EXERCISER MAINTENANCE LOG

DATE	MAINTENANCE (Check One)		FAULT SYMPTOMS (If Any)	SOLUTION
	Preventive	Corrective		

RK05 EXERCISER MAINTENANCE LOG

DATE	MAINTENANCE (Check One)		FAULT SYMPTOMS (If Any)	SOLUTION
	Preventive	Corrective		

RK05 EXERCISER MAINTENANCE LOG

DATE	MAINTENANCE (Check One)		FAULT SYMPTOMS (If Any)	SOLUTION
	Preventive	Corrective		

RK05 EXERCISER MAINTENANCE LOG

DATE	MAINTENANCE (Check One)		FAULT SYMPTOMS (If Any)	SOLUTION
	Preventive	Corrective		

READER'S COMMENTS

RK05 EXERCISER MAINTENANCE MANUAL
EK-RK05-MM-002

Digital Equipment Corporation maintains a continuous effort to improve the quality and usefulness of its publications. To do this effectively we need user feedback: your critical evaluation of this document. Please give specific page and line references when appropriate.

ERRORS NOTED IN THIS PUBLICATION:

_____

_____

_____

_____

_____

_____

SUGGESTIONS FOR IMPROVEMENT OF THIS PUBLICATION:

_____

_____

_____

_____

_____

_____

MISSING DOCUMENTATION:

Is there sufficient documentation on associated system programs required for use of the software described in this manual? If not, what material is missing and where should it be placed?

_____

_____

_____

_____

_____

Name _____ Date _____

Organization _____

Please describe your position _____

Street _____

City _____ State _____ Zip Code _____

Fold Here

Do Not Tear - Fold Here and Staple

FIRST CLASS
PERMIT NO. 33
MAYNARD, MASS.

BUSINESS REPLY MAIL
NO POSTAGE STAMP NECESSARY IF MAILED IN THE UNITED STATES

Postage will be paid by:

Digital Equipment Corporation
Technical Documentation Department
Digital Park, PK3-2
Maynard, Massachusetts 01754

Digital Equipment Corporation
Maynard, Massachusetts

digital

DIGITAL EQUIPMENT CORPORATION, Corporate Headquarters: Maynard, Massachusetts 01754, Telephone: (617) 897-5111
SALES AND SERVICE OFFICES
UNITED STATES—ALABAMA, Huntsville • ARIZONA, Phoenix and Tucson • CALIFORNIA, El Segundo, Los Angeles, Oakland, Ridgecrest, San Diego, San Francisco (Mountain View), Santa Ana, Santa Clara, Stanford, Sunnyvale and Woodland Hills • COLORADO, Englewood • CONNECTICUT, Fairfield and Meriden • DISTRICT OF COLUMBIA, Washington (Lanham, MD) • FLORIDA, Ft. Lauderdale and Orlando • GEORGIA, Atlanta • HAWAII, Honolulu • ILLINOIS, Chicago (Rolling Meadows) • INDIANA, Indianapolis • IOWA, Bettendorf • KENTUCKY, Louisville • LOUISIANA, New Orleans (Metairie) • MARYLAND, Odenton • MASSACHUSETTS, Marlborough, Waltham and Westfield • MICHIGAN, Detroit (Farmington Hills) • MINNESOTA, Minneapolis • MISSOURI, Kansas City (Independence) and St. Louis • NEW HAMPSHIRE, Manchester • NEW JERSEY, Cherry Hill, Fairfield, Metuchen and Princeton • NEW MEXICO, Albuquerque • NEW YORK, Albany, Buffalo (Cheektowaga), Long Island (Huntington Station), Manhattan, Rochester and Syracuse • NORTH CAROLINA, Durham/Chapel Hill • OHIO, Cleveland (Euclid), Columbus and Dayton • OKLAHOMA, Tulsa • OREGON, Eugene and Portland • PENNSYLVANIA, Allentown, Philadelphia (Bluebell) and Pittsburgh • SOUTH CAROLINA, Columbia • TENNESSEE, Knoxville and Nashville • TEXAS, Austin, Dallas and Houston • UTAH, Salt Lake City • VIRGINIA, Richmond • WASHINGTON, Bellevue • WISCONSIN, Milwaukee (Brookfield) •
INTERNATIONAL—ARGENTINA, Buenos Aires • AUSTRALIA, Adelaide, Brisbane, Canberra, Melbourne, Perth and Sydney • AUSTRIA, Vienna • BELGIUM, Brussels • BOLIVIA, La Paz • BRAZIL, Rio de Janeiro and Sao Paulo • CANADA, Calgary, Edmonton, Halifax, London, Montreal, Ottawa, Toronto, Vancouver and Winnipeg • CHILE, Santiago • DENMARK, Copenhagen • FINLAND, Helsinki • FRANCE, Grenoble and Paris • GERMANY, Berlin, Cologne, Frankfurt, Hamburg, Hannover, Munich and Stuttgart • HONG KONG • INDIA, Bombay • INDONESIA, Djakarta • IRELAND, Dublin • ITALY, Milan and Turin • JAPAN, Osaka and Tokyo • MALAYSIA, Kuala Lumpur • MEXICO, Mexico City • NETHERLANDS, Utrecht • NEW ZEALAND, Auckland • NORWAY, Oslo • PUERTO RICO, Santurce • SINGAPORE • SWEDEN, Gothenburg and Stockholm • SWITZERLAND, Geneva and Zurich • UNITED KINGDOM, Birmingham, Bristol, Edinburgh, Leeds, London, Manchester and Reading • VENEZUELA, Caracas •

printed in U.S.A.