ILLUSTRATED PARTS BREAKDOWN

PC100

RAINBOW 100 SYSTEM UNIT

HOW TO USE THE IPB

GENERAL
This IPB is arranged following the organization and subordination of the engineering hardware structure.

MAJOR ASSEMBLY LOCATOR
The Major Assembly Locator (first illustration) is an index that provides a description and a figure reference for all illustrations used in this manual.

MOUNTED PARTS LIST
This manual identifies each assembly being broken down (figure reference column) and its parts of that assembly. Further breakdown of an assembly is shown by an asterisk (*) preceding the item column in the Description Column. The number of asterisks preceding an item (* ** ***) serve to denote the subordination of that item with respect to the Major Assembly. A single asterisk preceding an item description indicates that the item is part of the major assembly being illustrated. Items that are subordinate to single asterisk items are denoted by two asterisks (**) and immediately follow the related single asterisk item. Additional asterisks are used, as required, to denote further subordination. This system of part identification provides a means for the user to identify the next higher assembly item and make alternate selection for parts which the required replacement part or assembly is not immediately available.

COLUMN CALLOUT DESCRIPTION
Figure & Item — Indicates the figure number and item number of each part.

Description — Lists the name of the part and pertinent identifications when required. Asterisks preceding the description denote the subordination of the part to the next higher assembly.

DEC Part No. — Lists the DEC part ordering number. A blank in this column indicates a DEC part number was not assigned at the time of publication.

ECO Cycle — The number at the top of this column indicates the ECO level of the system (option) in which the IPB was initially prepared. Subsequent ECO level designations, that modify existing parts or add new parts to the device, are inserted in the ECO Cycle column next to the part that is added or modified. A bracket (]) preceding the item description is used to indicate the parts affected by ECO's.

Vendor Code/Part No. — Indicates vendor parts that are not included by DEC. Refer to the Field Service Spares Catalog (vendor part number to DEC part number) for the vendor code cross-reference.

Used On Code — Letters in this column correspond to the validation notes assigned in Figure 1. Parts with no alpha notation are used only in some radio variations. A blank indicates that the part is used on all option variations.

Ref Fig No. — A cross reference between illustrations. For each Major Assembly, the number in this column denotes the figure of the next higher assembly. For all subassemblies, the number in this column denotes the figure showing additional breakdown.

SYMBOL USAGE
Hardware Designators — Alpha designators for screws (S), washers (W), nuts (N), and retaining rings (R) are inserted after the three number sequence on the (first, after alpha stages) item numbers are used.

Attaching Hardware — The (A) symbol is inserted before any part that is used as attaching hardware. Attaching hardware is identified as those parts that are not an integral part of the referenced assembly.

(NFS) Not Field Repairable — The (NFS) symbol is inserted after any assembly that is not to be field repaired.

Other Symbols — Any other symbols that are required for kits, accessories, etc., will be explained and appear as part of the item description.

REVISION HISTORY					OTHER IPB MANUALS REQUIRED TO SUPPORT THIS OPTION. . . . .
PRINTING	ECO LEVEL			DATE	
3rd Printing	PC100	00005-00013		1-25-85	EK-QSX50-IP
	BA23	00000-00002			EK-VR201-IP
	70-19974	00003-00006			EK-LK201-IP
	70-19973	00000-00002			
	70-19972	00000-00002			
	H7642	00005-00013			
	70-20816	00001-00001			
	70-19941	00001-00001			

Copyright © 1983, 1984, 1985 by Digital Equipment Corporation.
All rights reserved.
DEC reserves the right, without notice, to make substitutions and modifications in the specifications of products discussed in this manual and further reserves the right to withdraw any of these products from the market without notice.

DEC is not responsible for errors which may appear in the technical description (including illustrations and photographs) of the products covered by this manual.

None of the descriptions contained in this manual imply the granting of any license under any patent, copyright or other proprietary rights or interests claimed or owned by others.

Printed in U.S.A.

VR201 MONOCHROME MONITOR
SEE VR201 IPD EK-VR201-IP

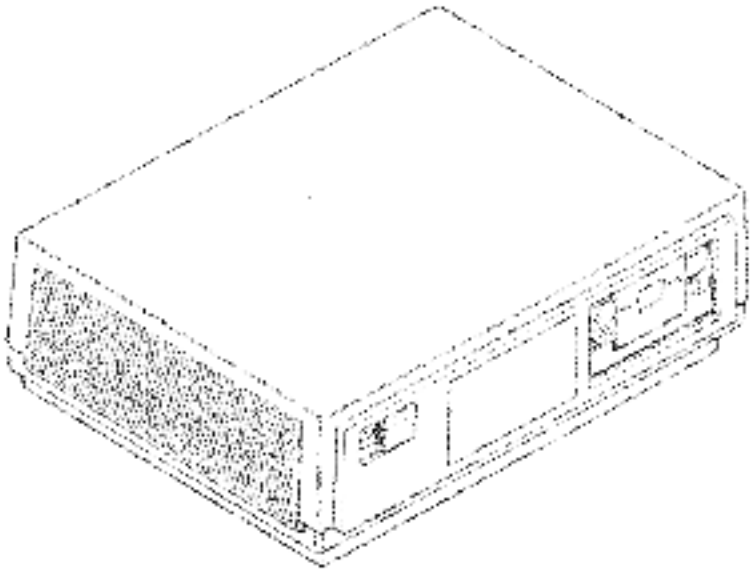

PC100 RAINBOW 100
SYSTEM UNIT
SEE FIGURE 1

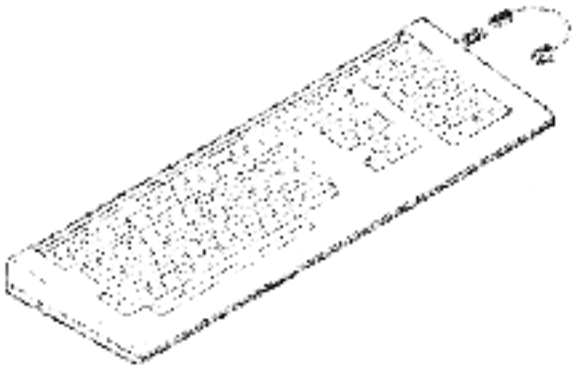

LK201 KEYBOARD
SEE LK201 IPD EK-LK201-IP

CD386-00

Rainbow 100 Basic System Configuration

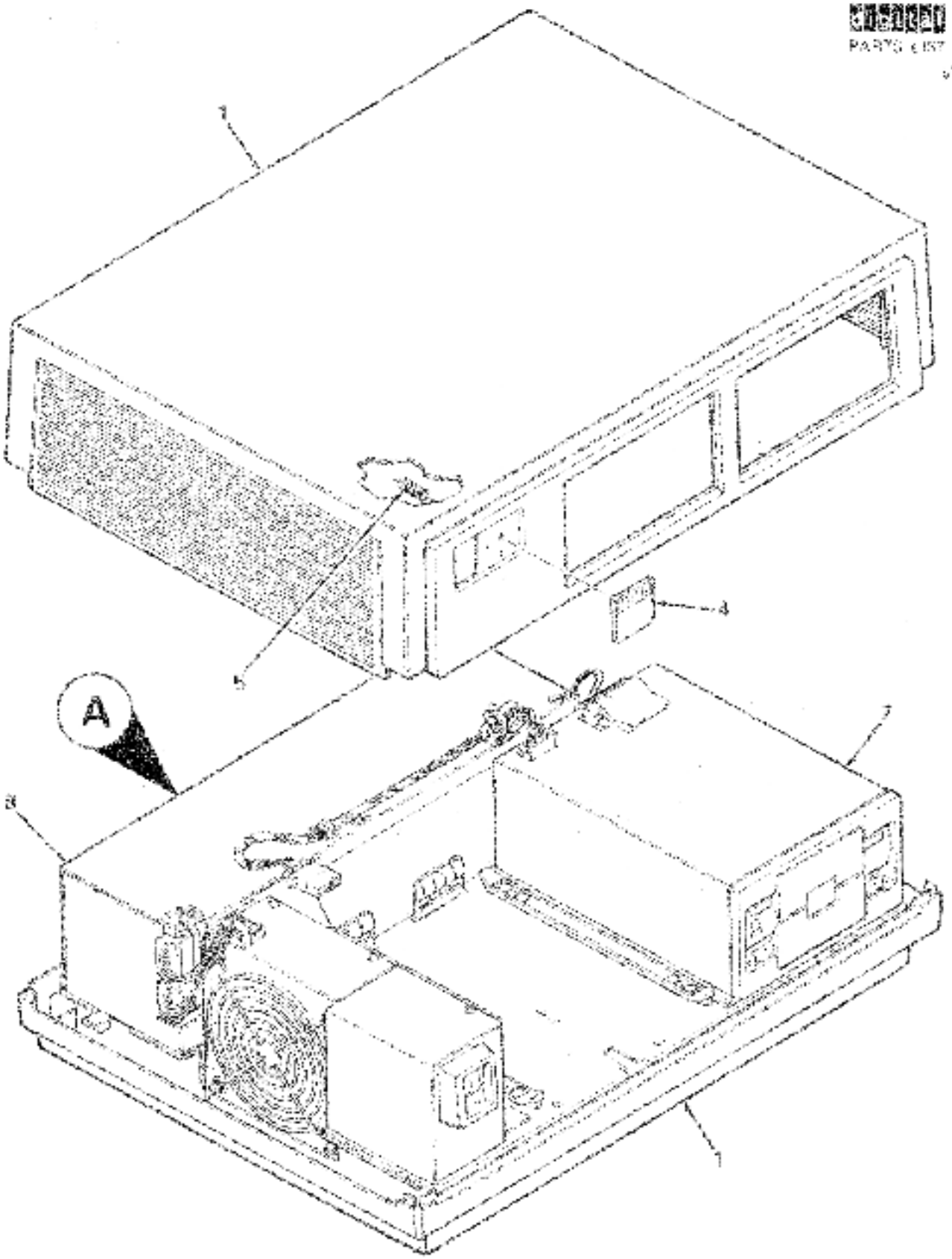

PC100-01

Figure 1. PC100-A Rainbow 100 (Sheet 1 of 2)

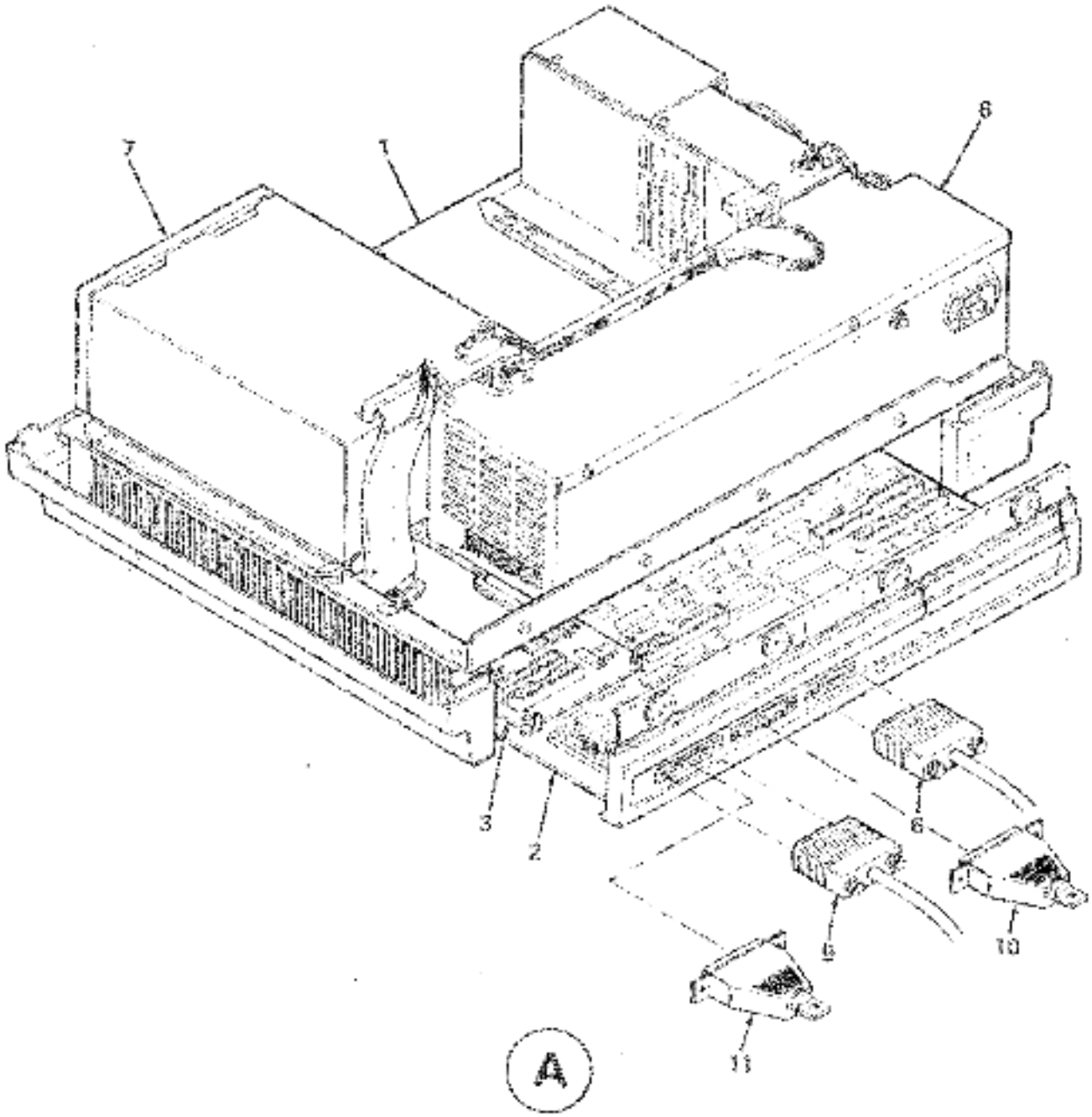

PC100-01A

Figure 1. PC100-A Rainbow 100 (Sheet 2 of 2)

FIG. & ITEM NO.	DESCRIPTION	DEC PART NO.	ECO CUT-IN PC100 00005	USED ON CODE	REF FIG NO.
1–X–	PC100-A RAINBOW 100				
	Code A – Used on Model PC100-A, 120/240V	PC100-A		A	
	Code B – Used on Model PC100-A1, 120V (added)	PC100-A1	00006	B	
1	*SYSTEM UNIT ENCLOSURE ASSEMBLY	BA25-B		A	2
	*SYSTEM UNIT ENCLOSURE ASSEMBLY (added)	BA25-A	00006	B	2
X– 2	*CPU ASSEMBLY (NFR) See Note Below	70-15974-06			3
X– 3	*RX50 Controller Module	54-15482-00			
4	*Medallion (Rainbow)	74-21266-03			
X– 5	*Spring, Compression	12-20113-01			
X– 6	*Video Cable Assembly (6 ft)	17-00283-00			
X– 7	*RX50 DUAL DISKETTE DRIVE (added) See RX50 (P3)	RX50-AA	00000	B	
8	*H7842-B POWER SUPPLY 120V (added)	H7842-B	00006	B	6A
X– 9	*Communication Cable Assembly (8Conn) (10 ft) (added)	17-00402-01	00010		
10	*Printer Loopback Plug	29-24631-00			
11	*Comm Connector Loopback Plug	12-15538-01			
	Labels (Not Shown)				
	*Label, "Regulations"	36-20218-01		A	
	*Label, "Regulations" (added)	36-20218-07	00006	B	
	*Label, "Power Rating"	36-20215-06		A	
	*Label, "Power Rating" (added)	36-20215-08	00000	B	
	*Label, "Bar Code"	36-18460-06			
	*Label, "Correct Voltage Setting"	36-16157-00		A	
	*Label, "Permanently Set for 120V" (added)	36-21790-01	00005	B	
	Note: NFR - Not Field Repairable				

X – Purchasable Parts from PSG (See Green Section)

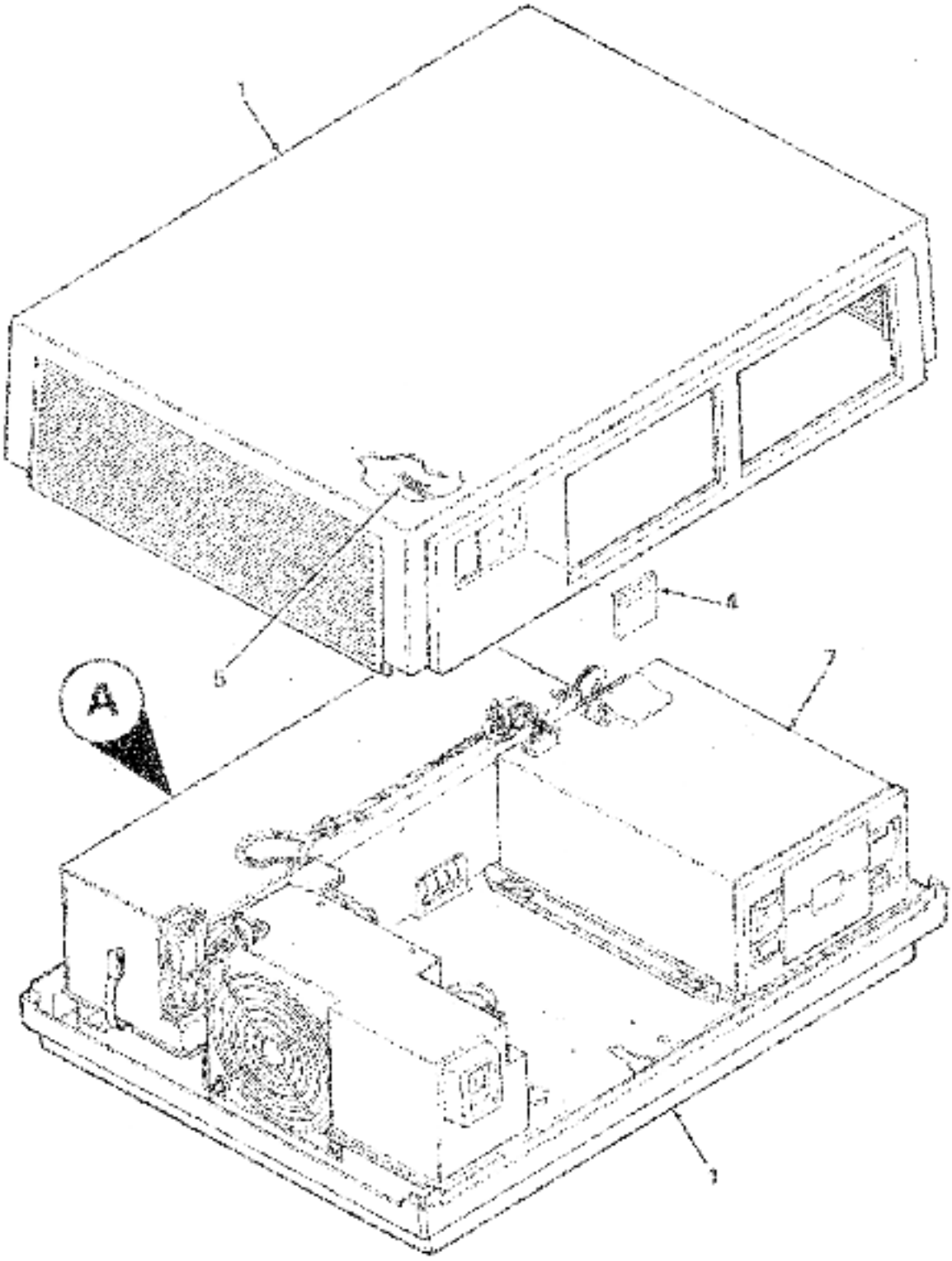

PC100-318

Figure 1A. PC100-B Rainbow 100 (Sheet 1 of 2)

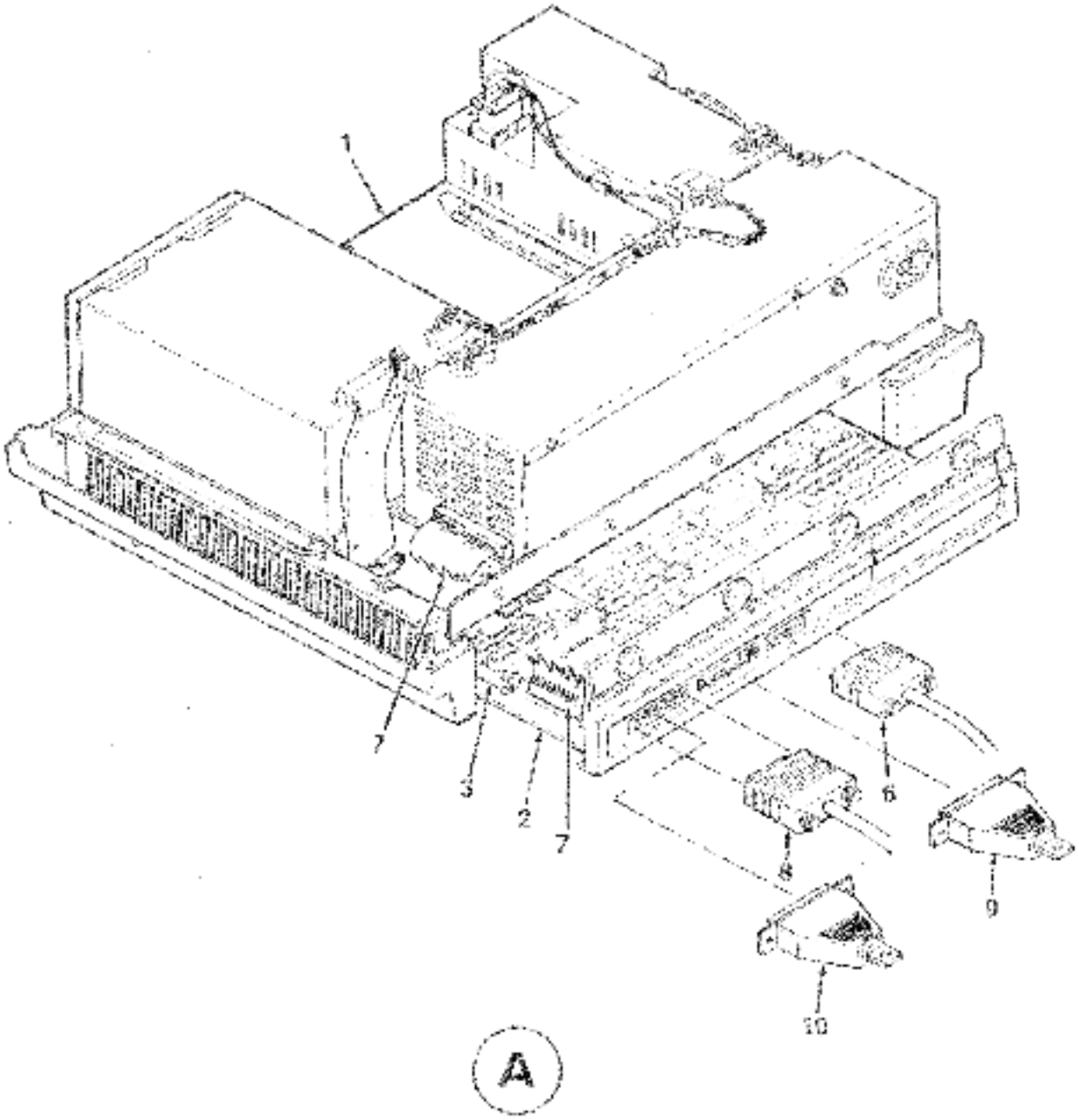

Figure 1A. PC100-B Rainbow 100 (Sheet 2 of 2)

FIG. & ITEM NO.	DESCRIPTION	DEC PART NO.	ECO CUT-IN PC100 90010	USED ON CODE	REF FIG. NO.
1A	PC100-S RAINBOW 100				
	Code C — Used on Model PC100-B2, 120V, English, German, French	PC100-B2		C	
	Code D — Used on Model PC100-B3, 240V, English, German, French	PC100-B3		D	
	Code E — Used on Model PC100-B4, 240V, English, Dutch, French	PC100-B4		E	
	Code F — Used on Model PC100-B5, 240V, English, Finnish, Swedish	PC100-B5		F	
	Code G — Used on Model PC100-B6, 240V, English, Danish, Norwegian	PC100-B6		G	
	Code H — Used on Model PC100-B7, 240V, English, Spanish, Italian	PC100-B7		H	
1	*SYSTEM UNIT ENCLOSURE ASSEMBLY	5A26-C5		C-H	2A
X— 2	*CPU ASSEMBLY (NFR) See Note Below	70-19974-02		C, D	3B
	*CPU ASSEMBLY (NFR) See Note Below	70-19974-03		E	3B
	*CPU ASSEMBLY (NFR) See Note Below	70-19974-04		F	3B
	*CPU ASSEMBLY (NFR) See Note Below	70-19974-05		G	3B
	*CPU ASSEMBLY (NFR) See Note Below	70-19974-06		H	3B
X— 3	*8088 Controller Module	54-16462-00			
4	*Mediation (Rainbow 1)	74-27210-00			
X— 5	*Spring, Compression	12-20113-01			
X— 6	*Video Cable Assembly (6 ft)	17-00283-00			
7	*Motherboard Cable Assembly	17-00318-02			
X— 8	*Communication Cable Assembly (SCC04) (10 ft)	17-00402-01			
9	*Printer Loopback Plug	29-24631-00			
10	*Comm Connector Loopback Plug	12-15236-04			
	Labels (Not Shown)				
	*Label, "Regulations"	36-20218-09		C, E-H	
	*Label, "Regulations"	36-20218-12		D	
	*Label, "Power Rating"	36-20219-08			
	*Label, "Bar Code"	36-18460-06			
	*Label, "Correct Voltage Setting"	36-17905-07		C	
	*Label, "Correct Voltage Setting"	36-17905-09		D, H	
	*Label, "Correct Voltage Setting"	36-17905-11		F, G	
	*Label, "Correct Voltage Setting"	36-17905-12		E	
	Note: (NFR=Not Field Repairable				

X = Purchasable Parts from PSG (See Green Section)

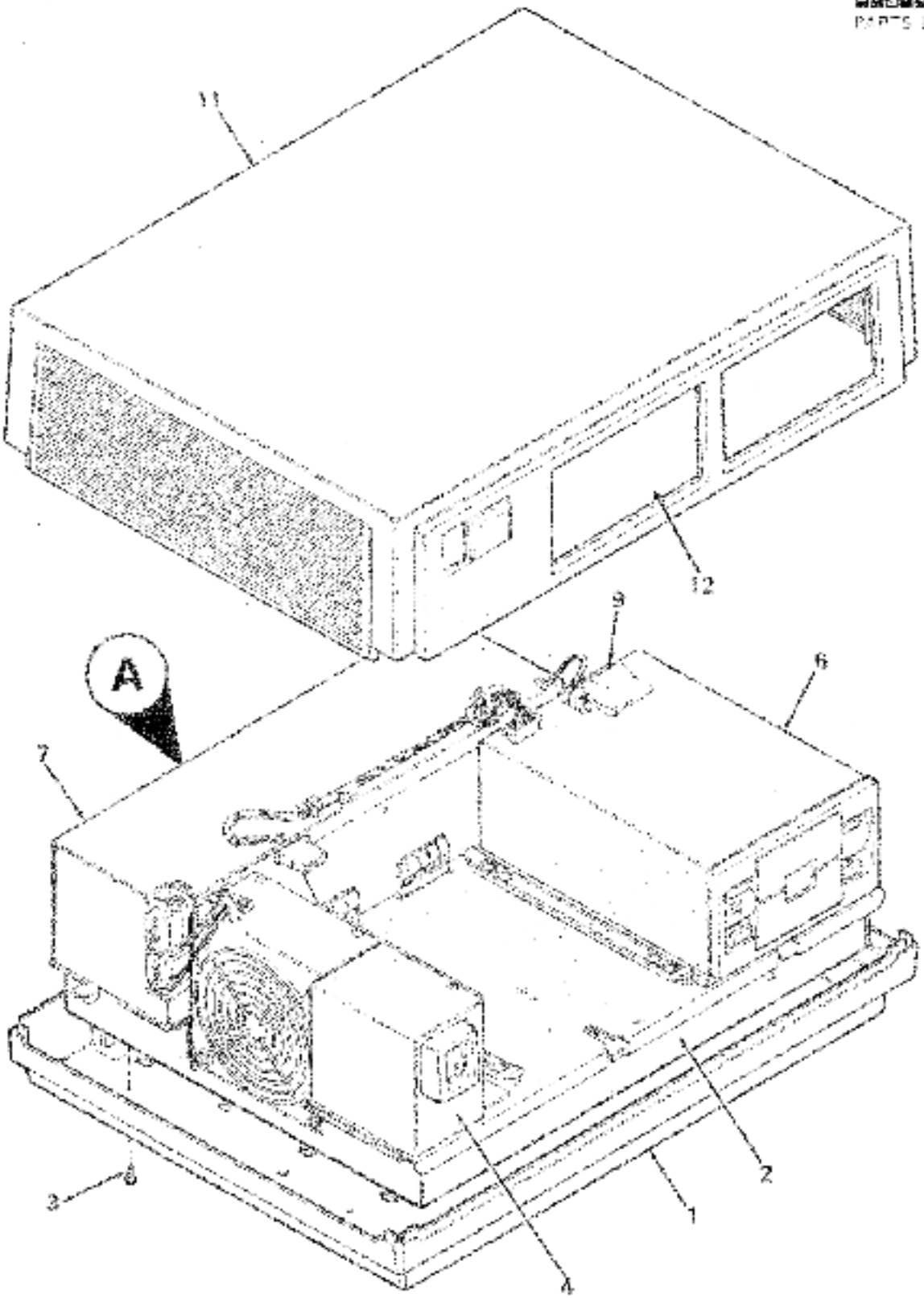

PC100-02

Figure 2. PC100-A System Unit Enclosure Assembly (Sheet 1 of 2)

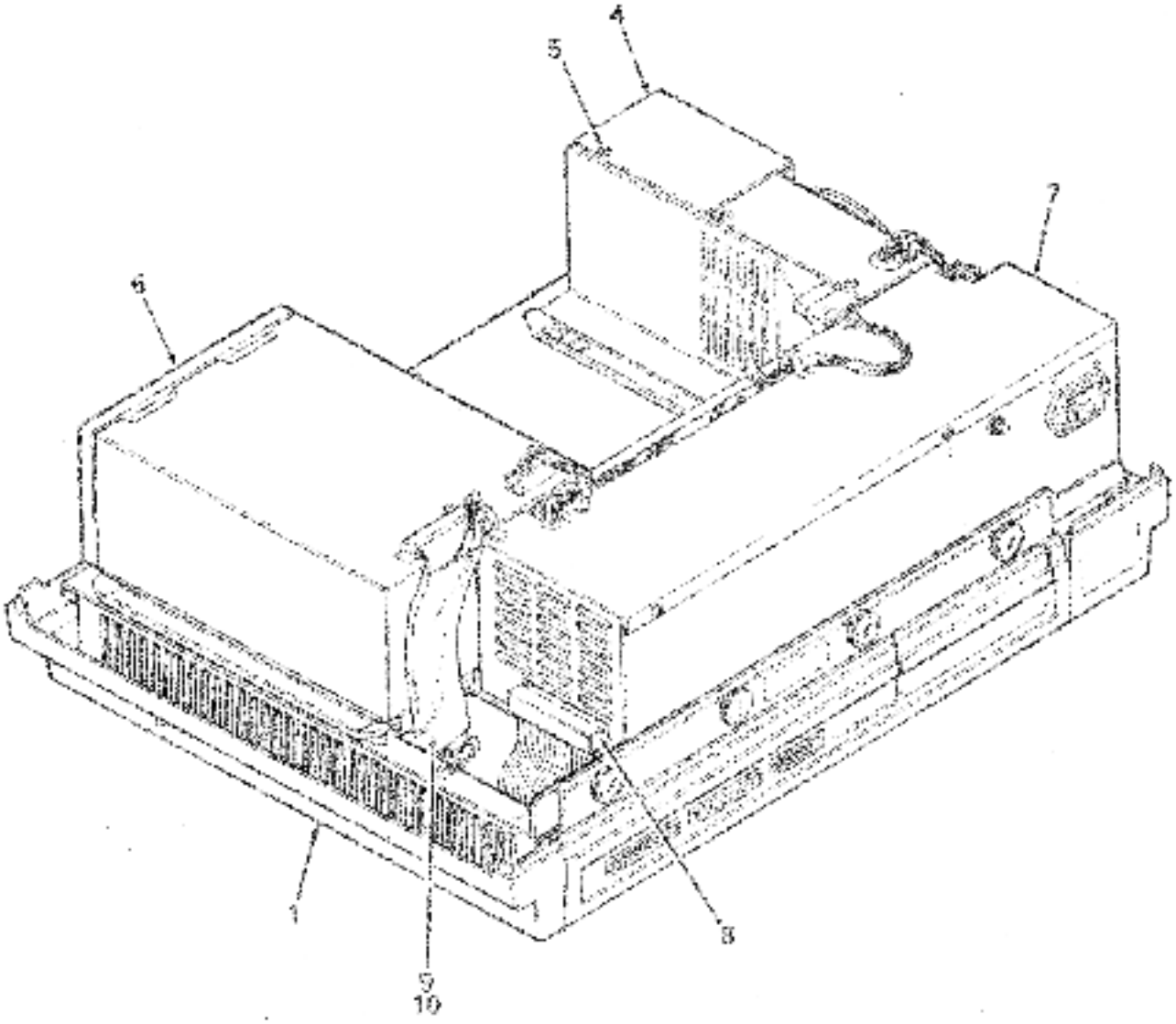

A

PC100-025A

Figure 2. PC100-A System Unit Enclosure Assembly (Sheet 2 of 2)

FIG & ITEM NO.		DESCRIPTION	DEC PART NO.	ECO CUT-IN BA25 00000	USED ON CODE	REF FIG NO.
2-		SYSTEM UNIT ENCLOSURE ASSEMBLY	BA25-B		A	1
		SYSTEM UNIT ENCLOSURE ASSEMBLY (deleted)	BA25-A	00001	B	1
X-	1	*BOTTOM ENCLOSURE ASSEMBLY	70-19573-00			4
	2	*Riveted Assembly	70-10571-00			
	3	*Screw, Phl Flat Hd No. 8-32 x 5/16	90-08021-02			
	4	*FAN BRACKET ASSEMBLY	70-19572-00			5
	5	*Screw, Semi Phl Pan Hd No. 8-32 x 5/16	90-00701-00			
X-	6	*RX50 DUAL DISKETTE DRIVE See RX50 IPB	RX50-AA		A	
	7	*H7842-A POWER SUPPLY (deleted) (See Note)	H7842-A		A	6
X-		*H7842-D POWER SUPPLY (added)	H7842-D	00001	A	64
X-	8	*Motherboard Cable Assembly (deleted)	17-00318-01			
		*Motherboard Cable Assembly (added)	17-00318-02	00001		
	9	*Cable Assembly	17-00317-03			
	10	*Clip, Flat Cable	12-13716-02			
X-	11	*Top Enclosure Assembly	70-19508-01			
	12	*Plate, Cover Bezel	74-26798-10			

Note: H7842-A is an acceptable alternate for BA25-B variation.

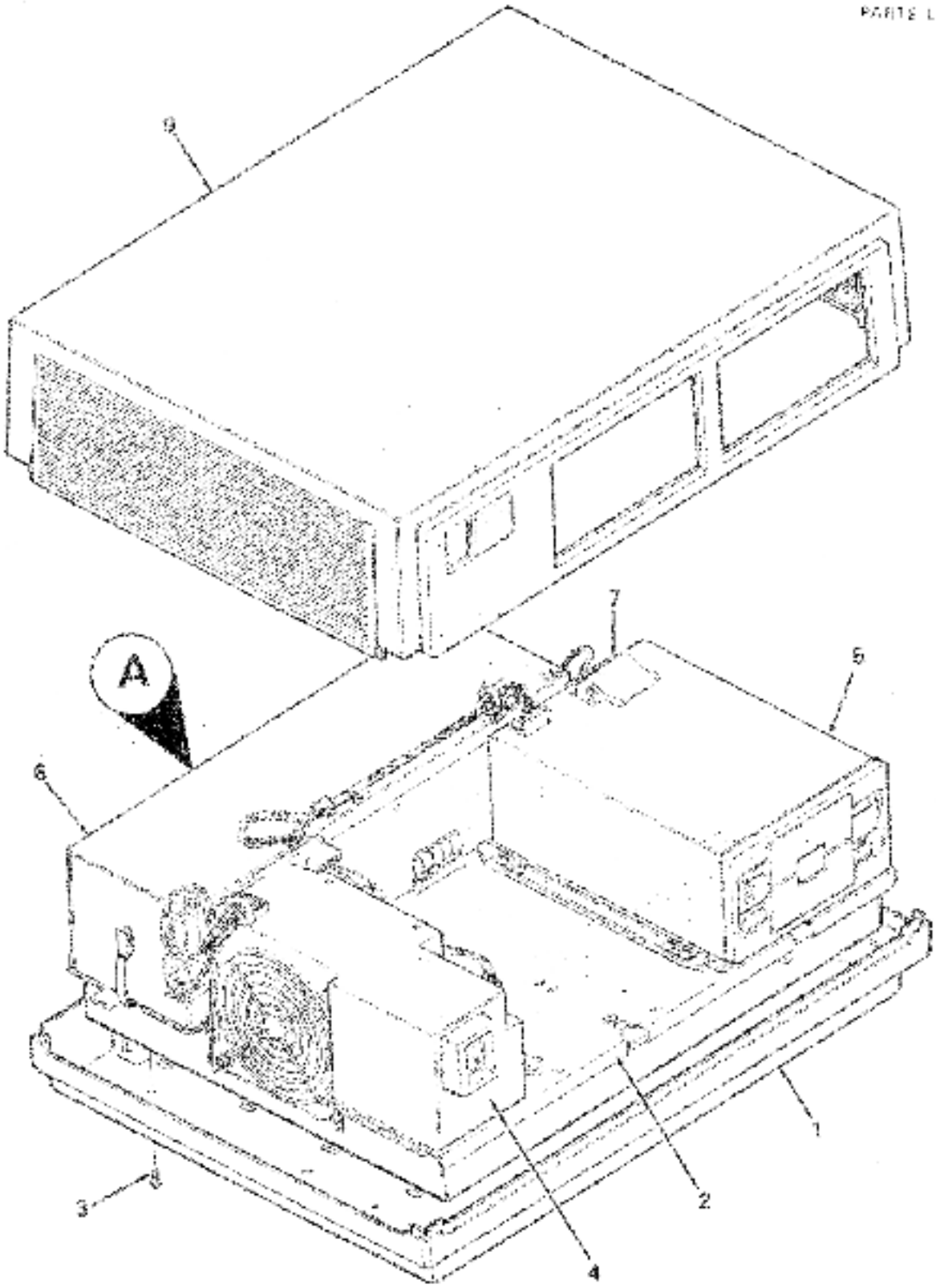

PC10X-078

Figure 2A. PC100-8 System Unit Enclosure Assembly (Sheet 1 of 2)

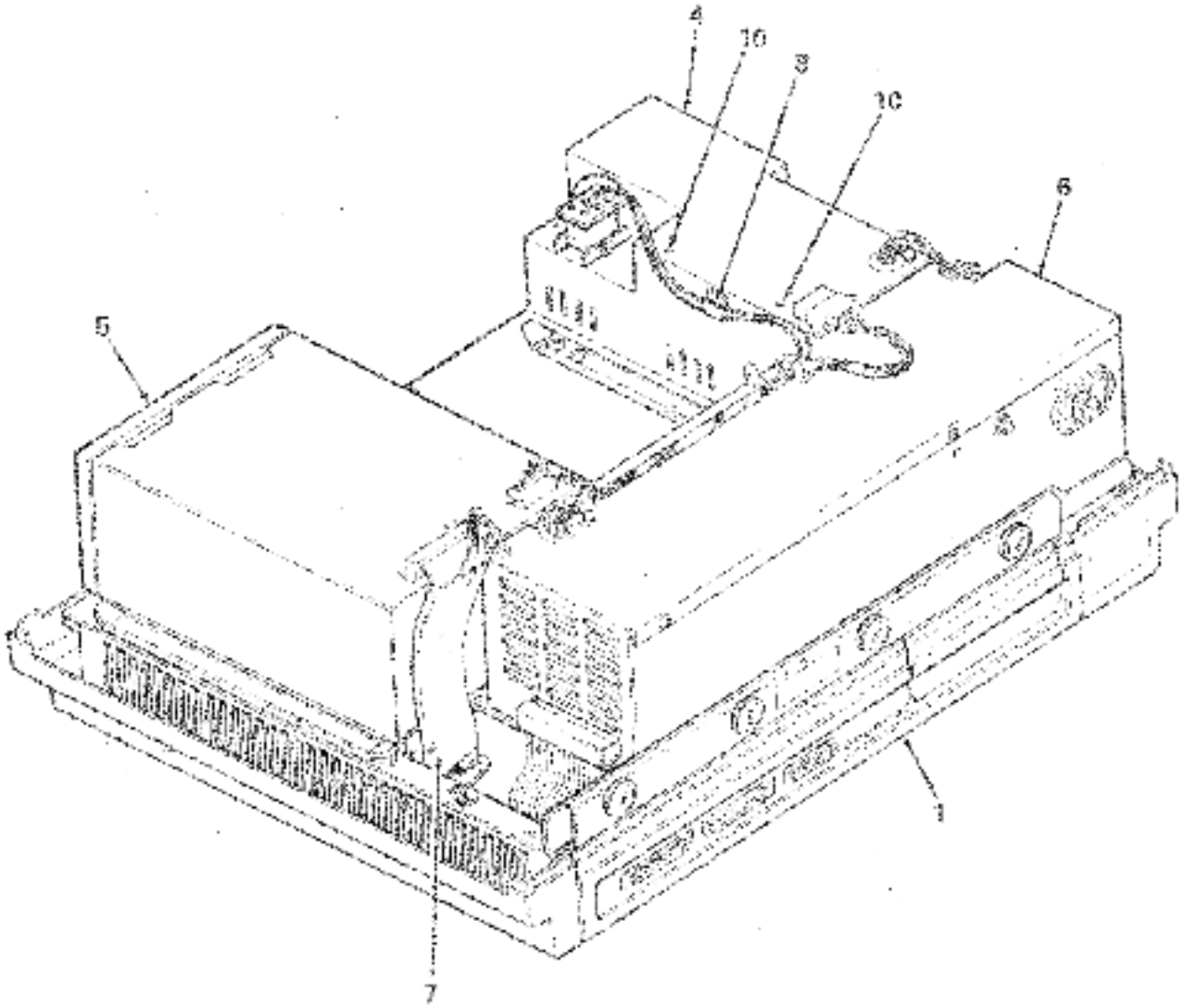

A

PC100-02C

Figure 2A. PC100-8 System Unit Enclosure Assembly (Sheet 2 of 2)

FIG. & ITEM NO	DESCRIPTION	DEC PART NO.	ECO CUT-IN BA25-00002	USED ON CODE	REF FIG NO.
2A -	SYSTEM UNIT ENCLOSURE ASSEMBLY	BA25-CB		C-H	1A
X- 1	*BOTTOM ENCLOSURE ASSEMBLY	70-19573-00			4
2	*Riveted Assembly	70-19571-01			
3	*Screw, Pnl Flat Hd No. 6-32 x 5/16	90-09021-02			
X- 4	*FAN ASSEMBLY	70-20910-01			7
X- 5	*RX50 DUAL DISKETTE DRIVE See RX50 IPB	RX50-AA			
X- 6	*H7842-D POWER SUPPLY	H7842-D		C-H	6A
7	*Cable Assembly	17-00317-03			
8	*Clamp, Cable (Adhesive Mount)	90-09771-03			
X- 9	*Top Enclosure Assembly	70-19605-01			
X- 10	*Screw, Sems Pnl Pan Hd No. 8-32 x 5/16	90-09701-00			

X -- Purchasable Parts from PSG (See Green Section)

FIG. & ITEM NO	DESCRIPTION	DEC PART NO.	ECO CUT IN 70-19974 00003	USED ON CODE	REF FIG NO.
X--3--	PC100-A CPU ASSEMBLY (NFR) See Note Below	70-19974-00		A, B	1
1	*System Module Assembly	54-15486-01			
2	*Support, Rear	74-27716-01			
3	*Screw, Phl Pan Hd No. 4-20 x 3/16	90-10411-01			
X- 4	*CONNECTOR PANEL ASSEMBLY	70-19941-00			8
5	*Washer, Flat	90-08146-00			
6	*Screw, Phl Pan Hd No. 4-40 x 5/16	90-06010-01			
7	*Screw, Soc; Phl Fan Hd No. 4-40 x 5/16	90-00049-44			
8	*Washer, Ext. Tooth Lock	90-10009-00			
9	*Surelock (Standoff Only)	90-02457-03			
10	*Loctite Adhesive	90-09021-00			
X-- 11	*Standoff	12-19567-01			
12	*Clip, Restraint	74-28524-01			
13	*Clip, Torsion (bolted)	74-28702-02	00006		
	Note: (NFR)=Not Field Repairable				

X = Purchasable Parts from PSG (See Green Section)

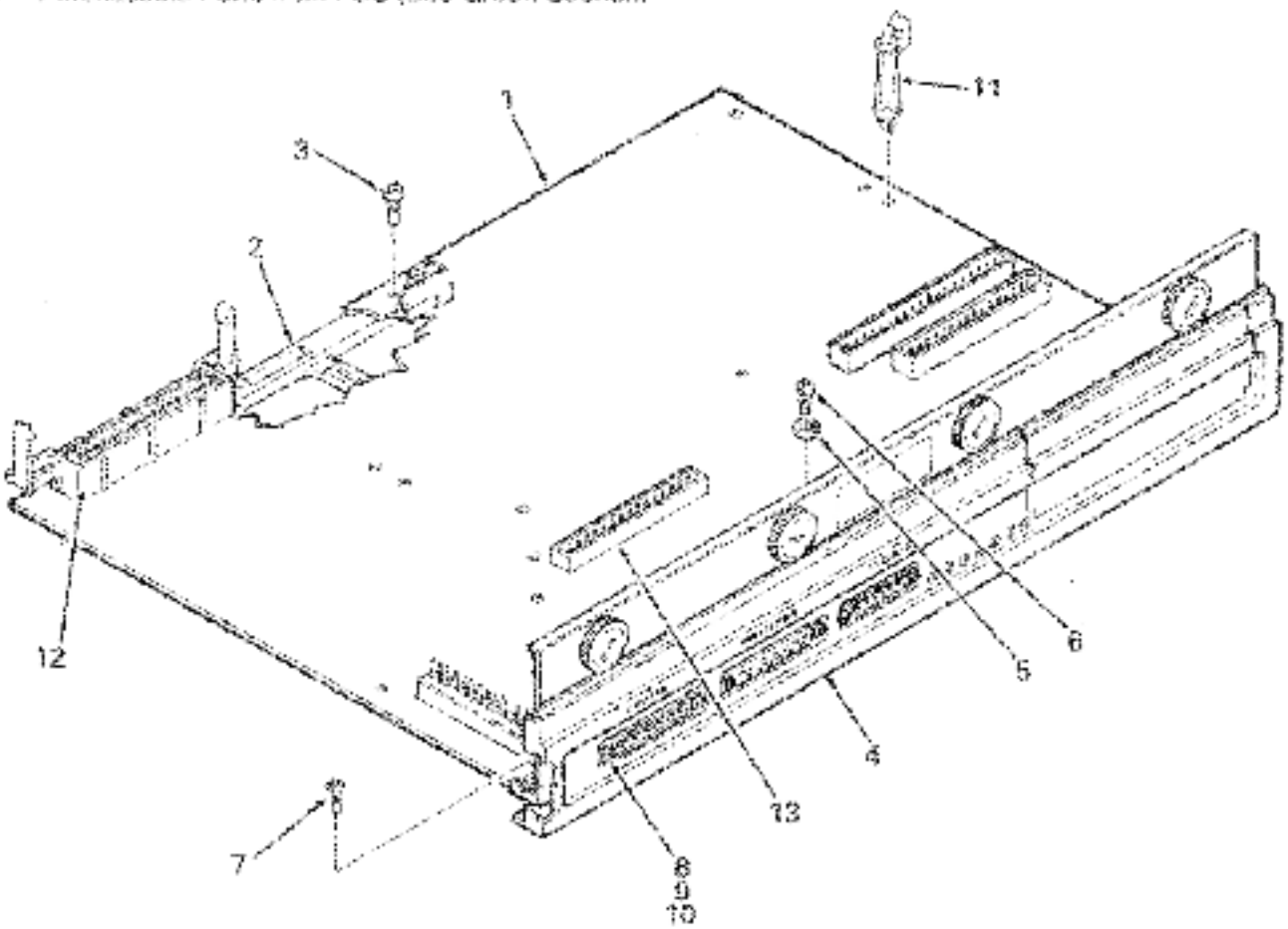

PC100-03

Figure 3. PC100-A CPU Assembly

FIG. & ITEM NO.	DESCRIPTION	DEC PART NO.	ECO CUT-IN 70-19374 00/08	USED ON CODE	REF FIG NO.
X—3A—	PC100-B CPU ASSEMBLY (NFRI See Note Below	70-19374-01			33
1	*System Module Assembly	54-18206-01			
2	*Support, Keel	74-27719-01			
3	*Screw, Phl Pan Hd No. 4-20 x 3/16	90-10411-01			
X— 4	*CONNECTOR PANEL ASSEMBLY	70-19941-00			8
5	*Washer, Flat	90-02948-00			
6	*Screw, Phl Pan Hd No. 4-40 x 5/16	90-06010-01			
7	*Screw, Sems Phl Pan Hd No. 4-40 x 5/16	90-06049-01			
8	*Washer, Ext. Tooth Lock	90-10099-00			
9	*Screwlock (Standoff Only)	90-02451-05			
10	*Loctite Adhesive	90-05921-00			
X— 11	*Standoff	12-19867-01			
12	*Clip, Restraint	74-28524-01			
13	*Clip, Retainer	74-28702-02			
	Note: (NFRI) Not Field Repairable				

X = Purchasable Parts from FSG (See Green Section)

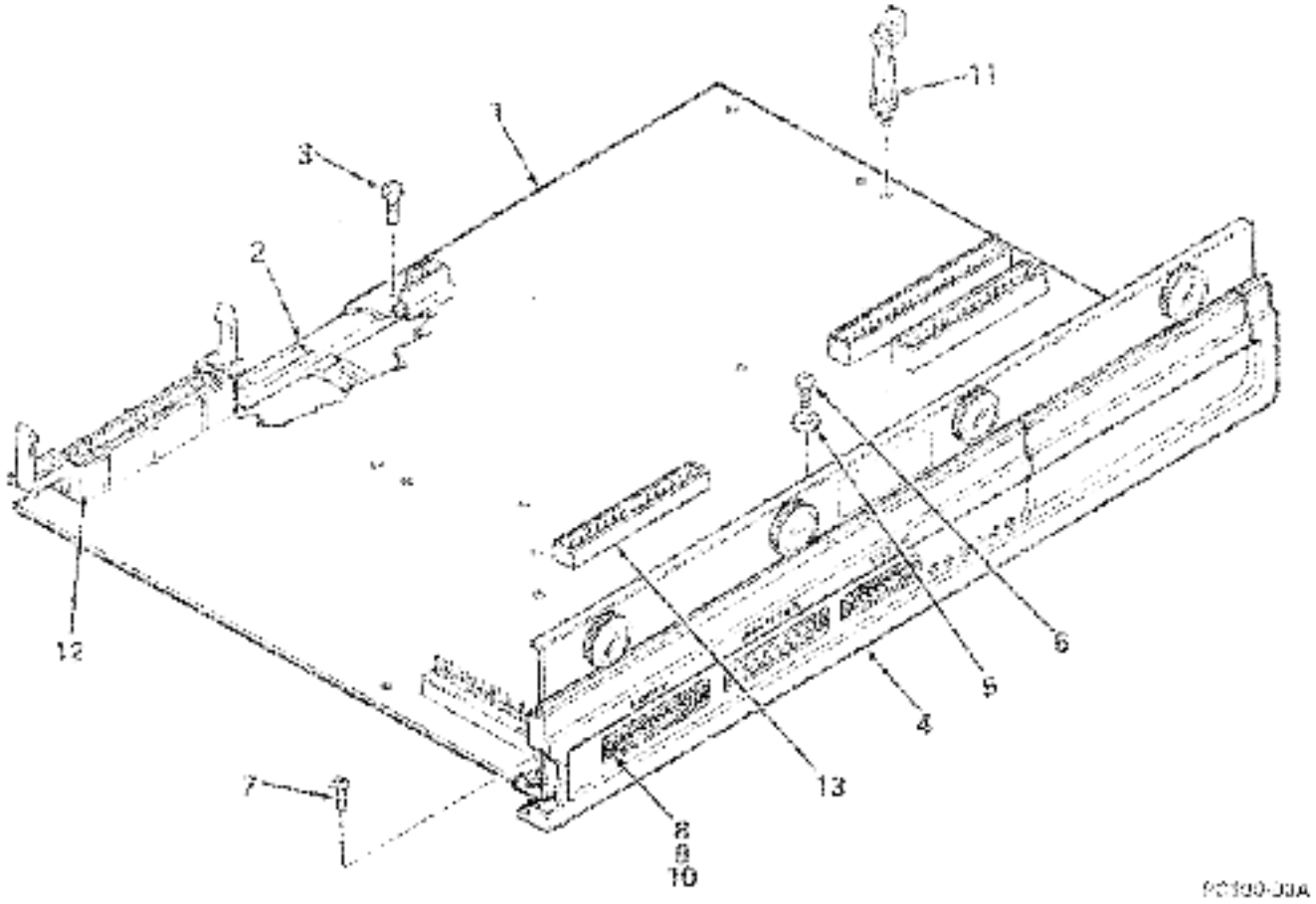

Figure 3A PC100-B CPU Assembly

FIG. & ITEM NO.	DESCRIPTION	DEC PART NO.	FCO CUTIN 70-19974 00006	USED ON CODE	REF FIG NO.
X--38--	PC100-B CPU ASSEMBLY (NFR) See Note Below	70-19974-02		C, D	1A
	PC100-B CPU ASSEMBLY (NFR) See Note Below	70-19974-03		E	1A
	PC100-B CPU ASSEMBLY (NFR) See Note Below	70-19974-04		F	1A
	PC100-B CPU ASSEMBLY (NFR) See Note Below	70-19974-05		G	1A
	PC100-B CPU ASSEMBLY (NFR) See Note Below	70-19974-06		H	1A
1	*CPU ASSEMBLY	70-19974-01			5A
2	*ROM 1 CLUSTER 1 (English, German, French)	23-020E5-00		C, D	
	*ROM 1 CLUSTER 2 (English, French, Dutch)	23-015E5-00		E	
	*ROM 1 CLUSTER 3 (English, Finnish, Swedish)	23-016E5-00		F	
	*ROM 1 CLUSTER 4 (English, Danish, Norwegian)	23-017E5-00		G	
	*ROM 1 CLUSTER 5 (English, Italian, Spanish)	23-018E5-00		H	
	Note: (NFR)--Not Field Repairable				

X = Purchasable Parts from PSO (See Green Section)

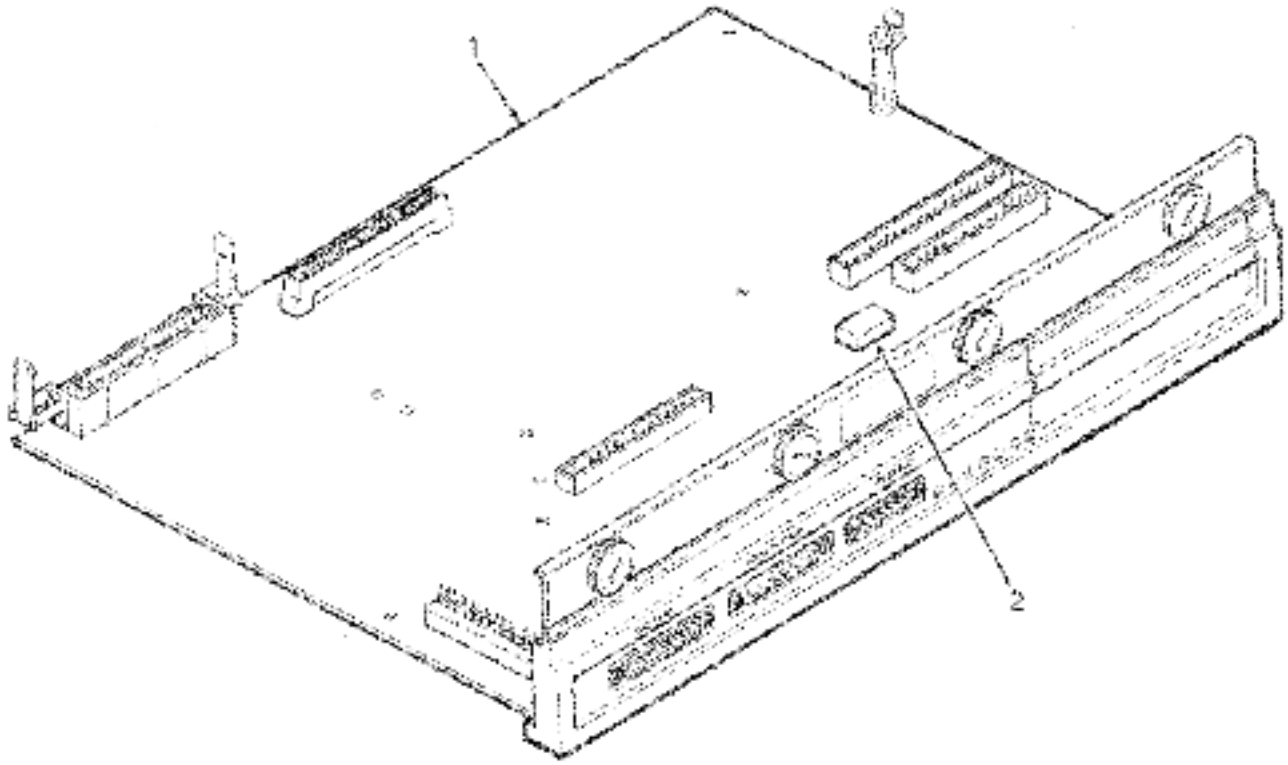

PC100-B-38

Figure 3B. PC100-B CPU Assembly

FIG. & ITEM NO.	DESCRIPTION	DEC PART NO.	ECO OUT-IN 10 19970 00000	USED ON CODE	REF FIG NO.
X -4-	BOTTOM ENCLOSURE ASSEMBLY	79-19973-00			2,2A
1	*Enclosure, Bottom	74-28688-01			
X– 2	*Latch, Wire (R.H.)	74-26242-01			
3	*Latch, Wire (L.H.)	74-26212-02			
X– 4	*Handle, Latch Wire	74-26537-01			
5	*Adhesive	49-01259-00			
6	*Washer, Flat (deleted)	90-09775-00			
	*Washer, Flat (added)	90-09775-01	00002		
X– 7	*Spring, Compression	12-15014-01			
8	*Ring, Retaining	90-09273-00			
X– 9	*Bumper, Rubber (Adhesives Backed)	30-08825-00			

X = Purchasable Parts from PSG (See Green Section)

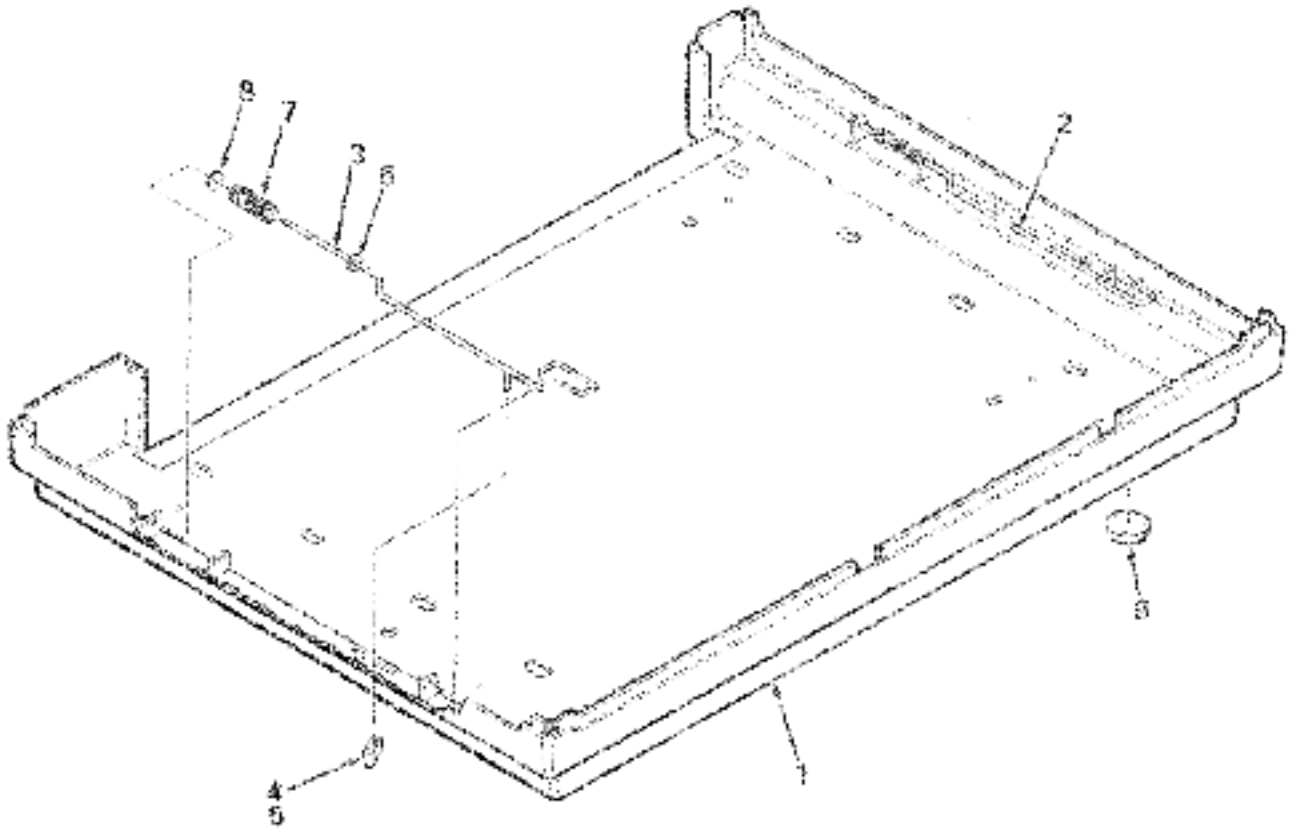

7C100-34

Figure 4. Bottom Enclosure Assembly

FIG. & ITEM NO.	DESCRIPTION	DEC PART NO.	ECO OUT-IN 70-19572 00000	USED ON CODE	REF NO.
5-	PC100 A A.C. FAN BRACKET ASSEMBLY	70-19572-00		A,B	2
1	*Bracket, Fan	74-26891-01			
X— 2	*Fan, 4-1/2 in. 20 CFM	12-13186-03			
3	*Guard, Finger	12-10203-01			
4	*Screw, Phl Pan Hd No. 6-32 x 7/8	90-08027-01			
5	*Washer, Flat	90-06653-00			
6	*Nut, Kep No. 6-32	90-08765-00			
X— 7	*Switch, Rocker 15A	12-17051-04			
X— 8	*Bezel, Switch	74-26246-01			
9	*Fan and Switch Harness Assembly	70-19520-00			
10	*Washer, Ext Tooth Lock No. 10	90-07651-00			
11	*Nut, Kep No. 10-32	90-08665-00			
12	*Bushing, Snap (Nylon) (added)	90-15353-01	03001		
13	*Cable Tie (added)	90-07980-00	03002		

X = Purchasable Parts from PSG (See Green Section)

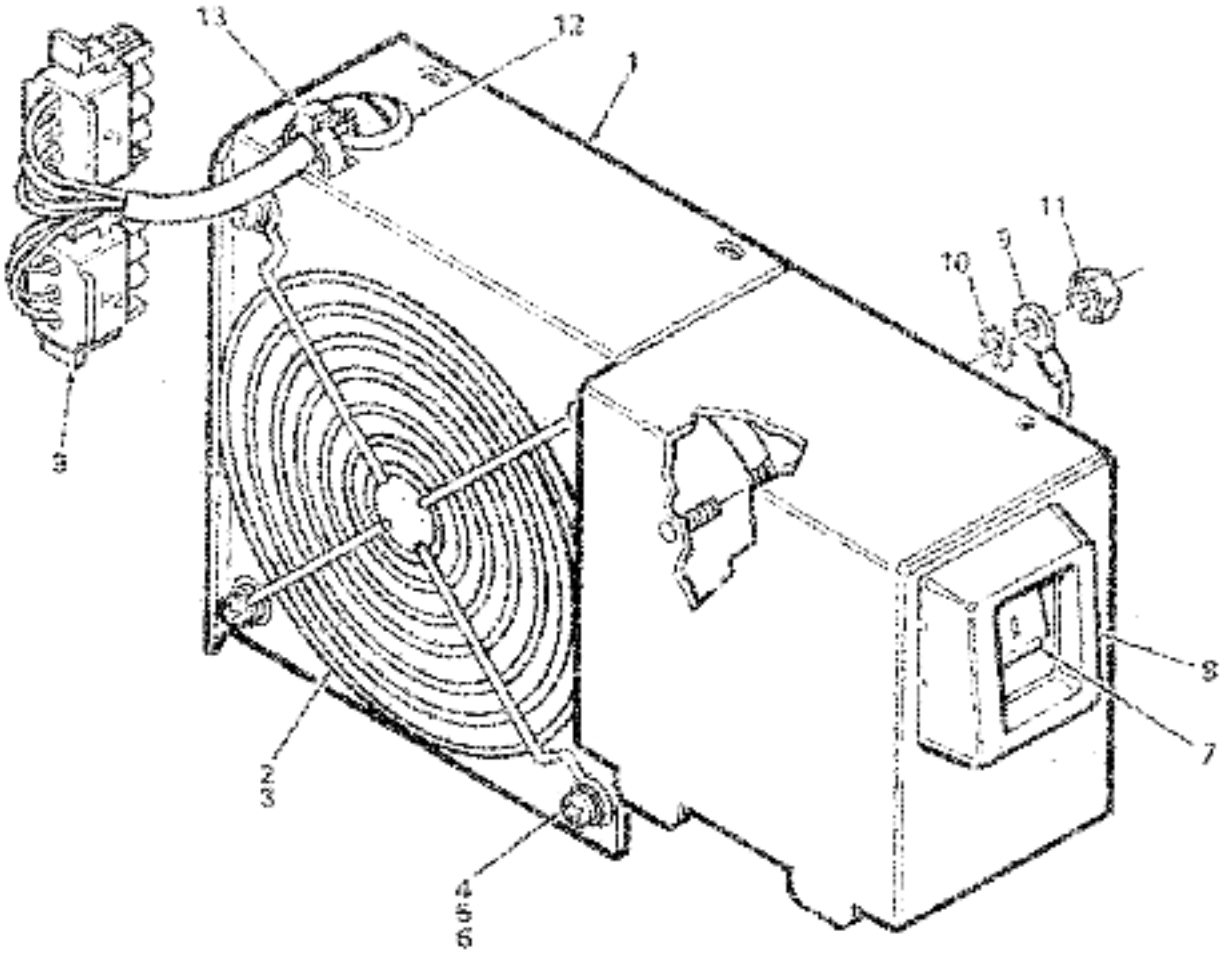

PC100 05

A.C. PC100 A Fan Bracket Assembly

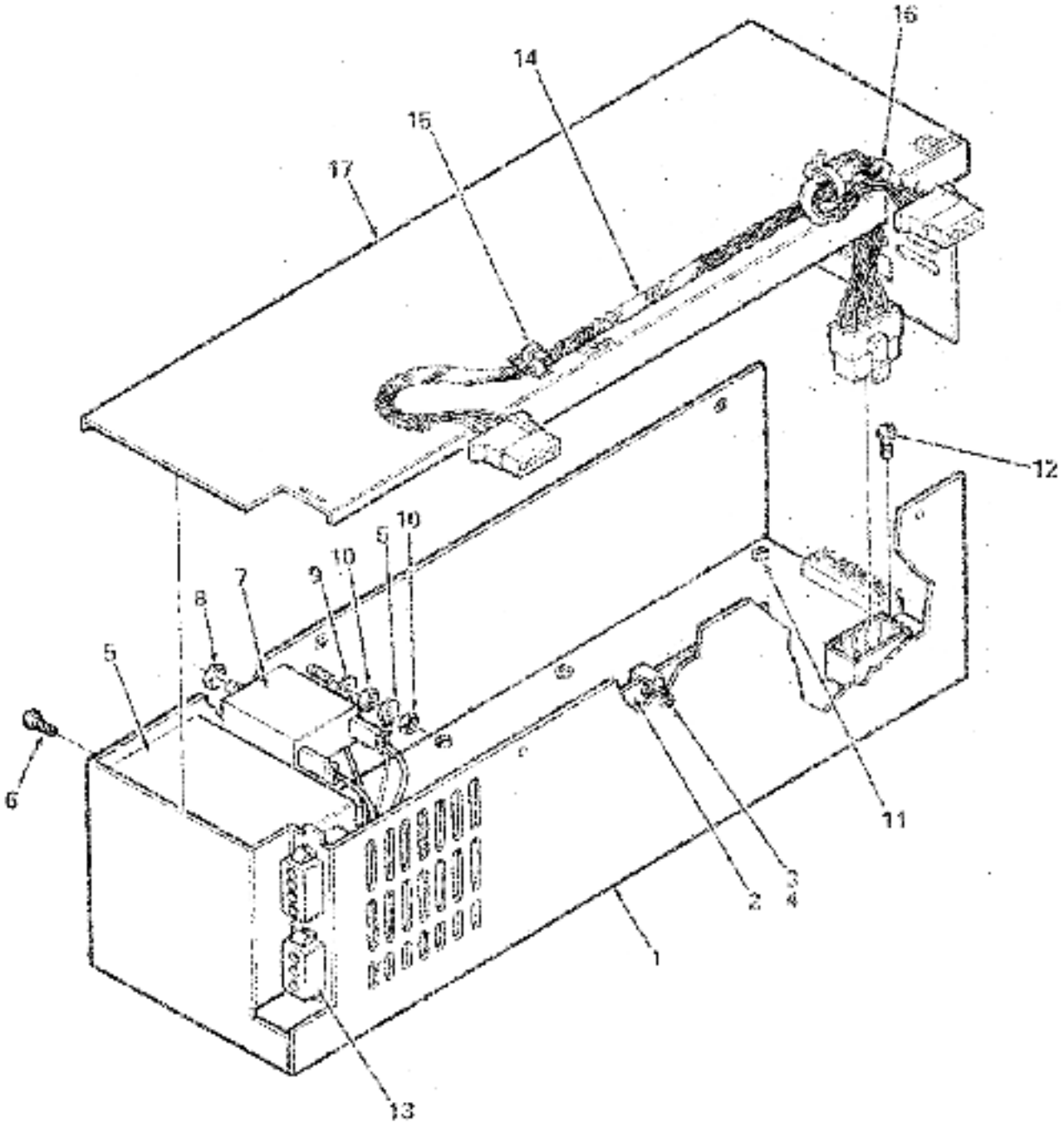

P01B-06

Figure 6. H7842-A Power Supply

FIG. & ITEM NO.	DESCRIPTION	DEC PART NO.	ECO CUT-IN H7842-00006	USED ON CODE	REF FIG NO.
X-6-	H7842-A POWER SUPPLY (painted) (See Note)	H7842-A	BA25-00001	A	2
1	*Box, Power Supply	74-20893-01			
2	*Power Supply Board	54-15187-00			
3	*Support, PC Board	12-20830-01			
4	*Screw, Phl Pan Hd No. 6-32 x 3/8 (Tapping Type)	90-00755-00			
5	*Line Filter Assembly 90V @ 4A	70-19732-00			
6	*Screw, Sems Phl Pan Hd No. 6-32 x 5/16	90-10155-00			
X- 7	*Circuit Breaker 4.0A 250V	32-10912-02			
8	*Nut, Switch No. 3/8-32	90-07528-00			
9	*Washer, Ext Tooth Lock No. 10	90-07861-00			
10	*Nut, Kep No. 10-32	90-08665-00			
11	*Screw, Phl Pan Hd No. 6-32 x 3/8	90-06022-01			
12	*Screw, Washer Par Hd No. 6-32 x 5/16	90-10245-00			
13	*Jumper Cable Assembly	70-19622-00			
X 14	*Floppy Drive Harness Assembly	70-19730-00			
15	*Cable Tie	90-07880-00			
16	*Bushing, Snap (Open/Close)	90-10350-01			
17	*Cover, Power Supply	74-20892-01			
	Labels/Decals (Not Shown)				
	*Label, "Fuse"	36-20123-01			
	*Label, "Caution, Correct Voltage Setting"	36-16157-00			
	*Label, "Caution"	36-20124-01			
	*Decal, "Ground"	36-12680-00			
	*Label, "Electrical Rating"	36-20122-02			
	Note: H7842-A is an inoperable alternate for the PC100-A variation.				

X = Purchasable Parts from PSG (See Green Section)

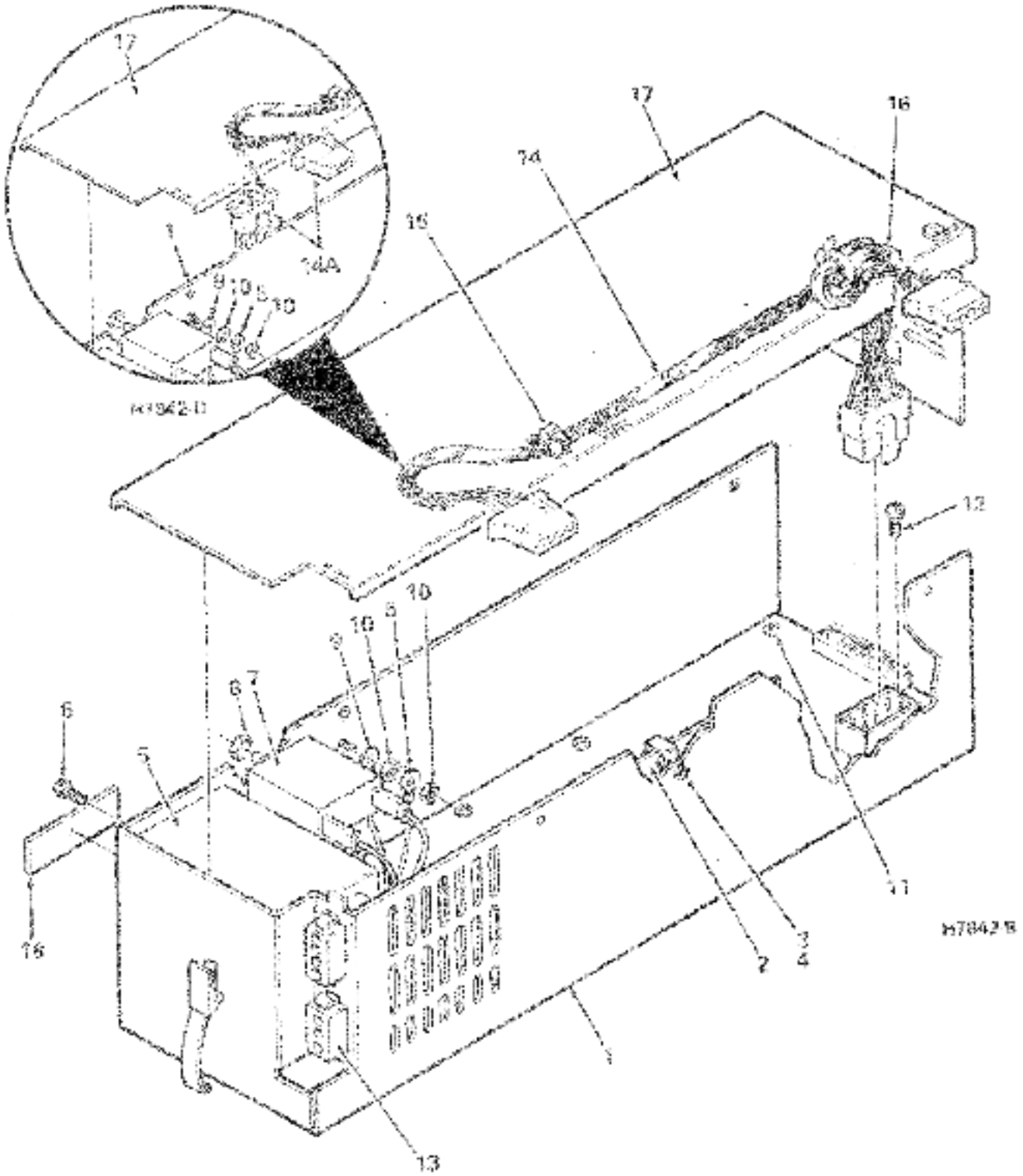

FC100-08A

Figure 6A. H7842-B,D Power Supply Assembly

FIG. & ITEM NO.	DESCRIPTION	DEC PART NO	ECO CUT-IN H7842-00013	USED ON CODE	REF FIG NO.
6A–	H7842-B POWER SUPPLY ASSEMBLY	H7842-B		B	1
X–	H7842-D POWER SUPPLY ASSEMBLY	H7842-D		A, C-H	2,2A
1	*Box, Power Supply	74-20833-01			
2	*Power Supply Board	54-15187-00		B	
	*Power Supply Board	54-15187-01		A, C-H	
3	*Support, PC Board	12-20130-01			
4	*Screw, Phl Pan Hd No. 6-32 x 3/8 (Tapping Type)	90-03755-00			
5	*Line Filter Assembly 90V @ 4A	70-19732-00			
6	*Screw, Phl Pan Hd No. 6-32 x 1/4	90-06020-01			
X– 7	*Circuit Breaker 4.0A 250V	72-19912-02			
8	*Nut, Switch No. 3/8-32	90-07827-00			
9	*Washer, Ext Tooth Lock No. 10	90-07651-00			
10	*Nut, Kep No. 10-32	90-06500-00			
11	*Screw, Phl Pan Hd No. 6-32 x 3/8	90-06022-01			
12	*Screw, Washer Pan Hd No. 8-32 x 5/16	90-10245-00			
13	*Jumper Cable Assembly	70-19622-00			
X– 14	*Floppy Drive Harness Assembly	70-19730-00		B	
14A	*Floppy Drive Harness Assembly	70-19730-01		A, C-H	
15	*Cable Tie	90-07880-00			
16	*Bushing, Snap (Open/Close)	40-10353-01			
17	*Cover, Power Supply	74-26692-01			
18	*Plate, Voltage Switch Cover	74-29033-01		B	
	Labels/Decals (Not Shown)				
	*Label, "Fuse"	36-20123-01			
	*Label, "Caution, Correct Voltage Setting"	36-16157-00		A, C-H	
	*Label, "Caution"	36-20124-01			
	*Decal, "Ground"	36-12680-02			
	*Label, "Electrical Rating"	36-22148-00			

X = Purchasable Parts from PSG (See Green Section)

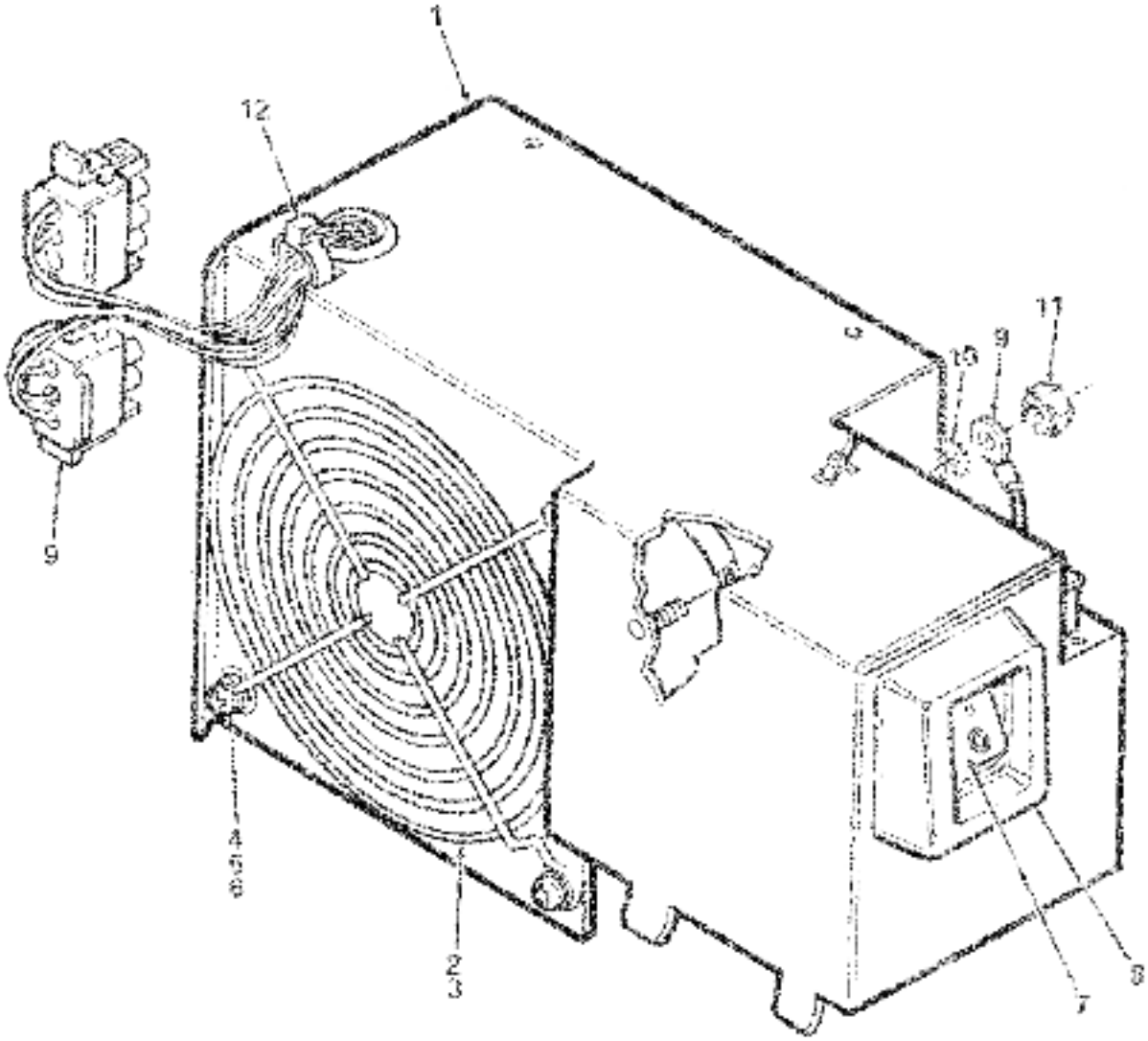

PC100-07

Figure 7. D.C. Fan Bracket Assembly

FIG. & ITEM NO.	DESCRIPTION	DEC PART NO.	ECO CUT-IN 70-70818 00001	USFG CN CODE	REF FIG. NO.
X 7	PC100-B D.C. FAN BRACKET ASSEMBLY (#00002)	70-70818-01	8A25-00001	C H	2A
1	*Bracket, Fan	74-23088-01			
2	*Fan, 4-1/2 in, 40 CFM	12-21917-01			
3	*Guard, Finger	12-10253-01			
4	*Screw, PH Pan Hd No. 6-32 x 7/8	30-06927-01			
5	*Washer, Flat	90-08853-00			
6	*Nut, Kep No. 6-32	50-00135-00			
X 7	*Switch, Rocker 16A	12-17991-04			
X 8	*Bezel, Switch	74-30318-01			
9	*Fan and Switch Cable Assembly	17-01186-01			
10	*Washer, Ext Tooth Lock No. 10	90-07651-00			
11	*Nut, Kep No. 10-32	80-00565-00			
12	*Cable Tie	00-07880-00			

X = Purchasable Parts from PSG (See Green Section)

FIG. & ITEM NO.	DESCRIPTION	DEC PART NO.	ECO CUT IN 70-19941 05001	USED ON CODE	REF FIG NO.
X—1—	CONNECTOR PANEL ASSEMBLY	70-19941-00			3,3A
1	*Weldment, Connector Panel	70-19943-00			
2	*Panel, Filter	74-27174-01			
3	*Panel, Dress	74-25670-01			
4	*Washer, Flat	90-00013-05			
5	*Ring, Set Retaining	13-20300-01			
6	*Screw, Thumb	74-27703-01			
7	*Screw, Pnl Pan Hd No. 4-24 x .22 (Self Tap)	90-10428-01			
8	*Label, "Use Coin To Turn"	38-21104-01			

X = Purchasable Parts from PRK (See Green Section)

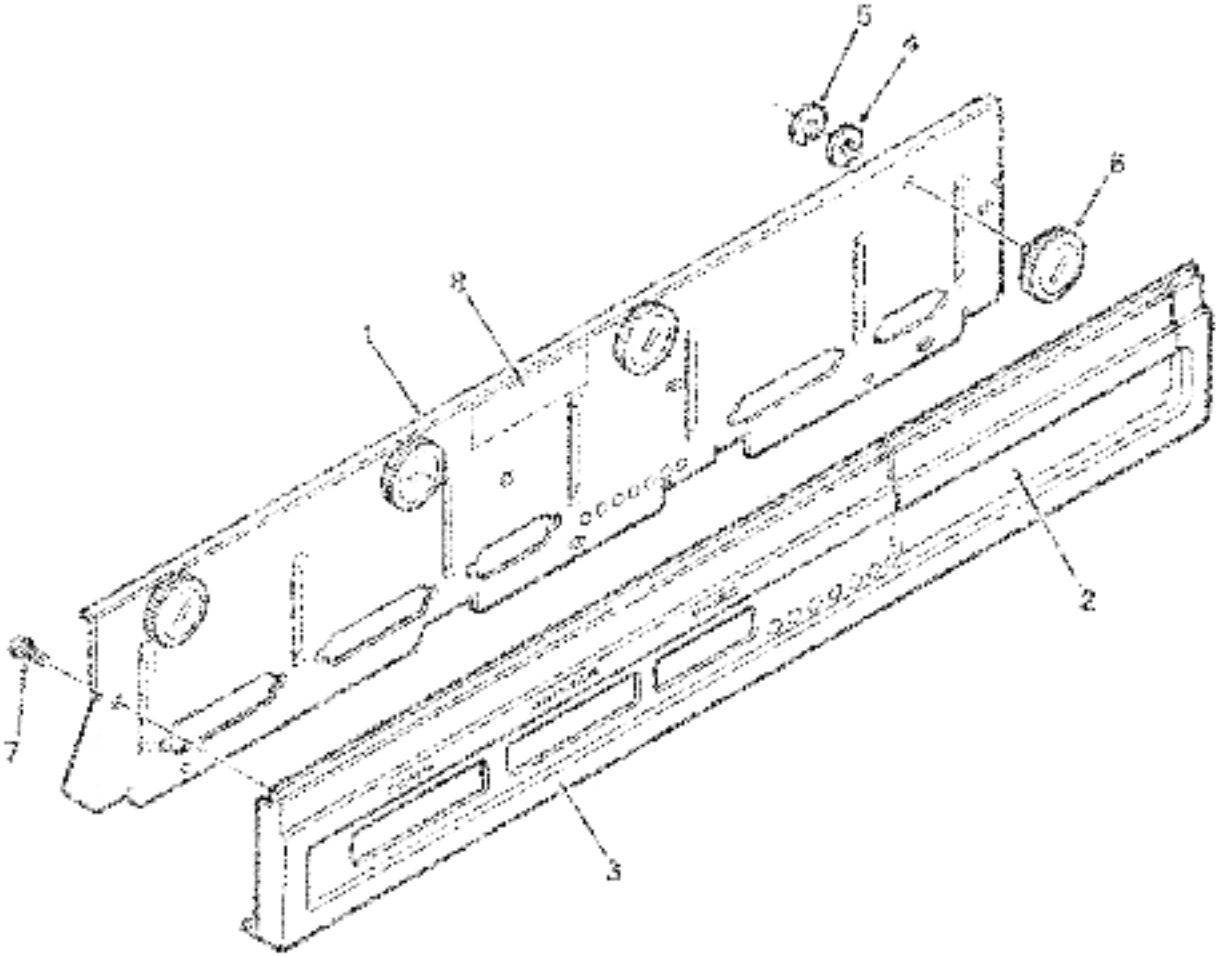

PU100-0K

Figure 8 Connector Panel Assembly

PC100 OPTIONS

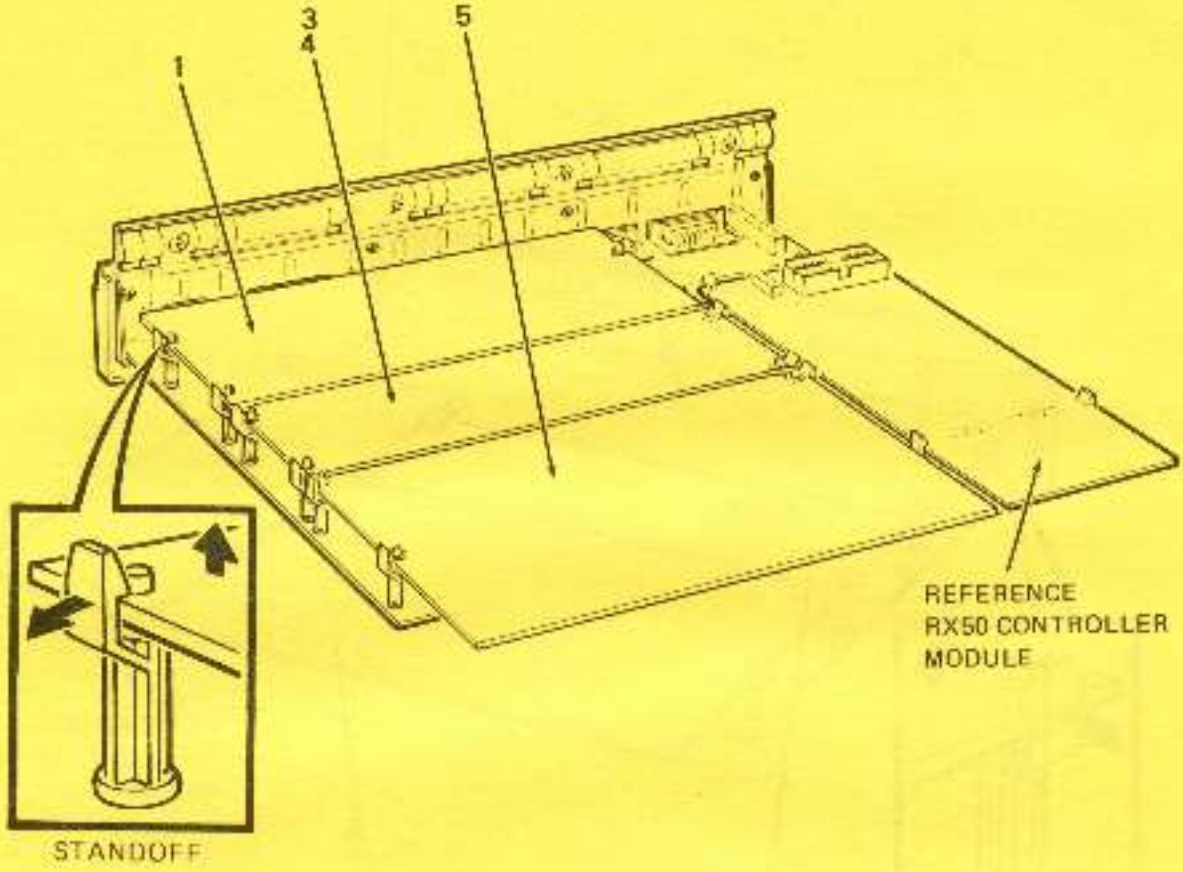

PC100-09

Figure 9. PC100 Options (Sheet 1 of 4)

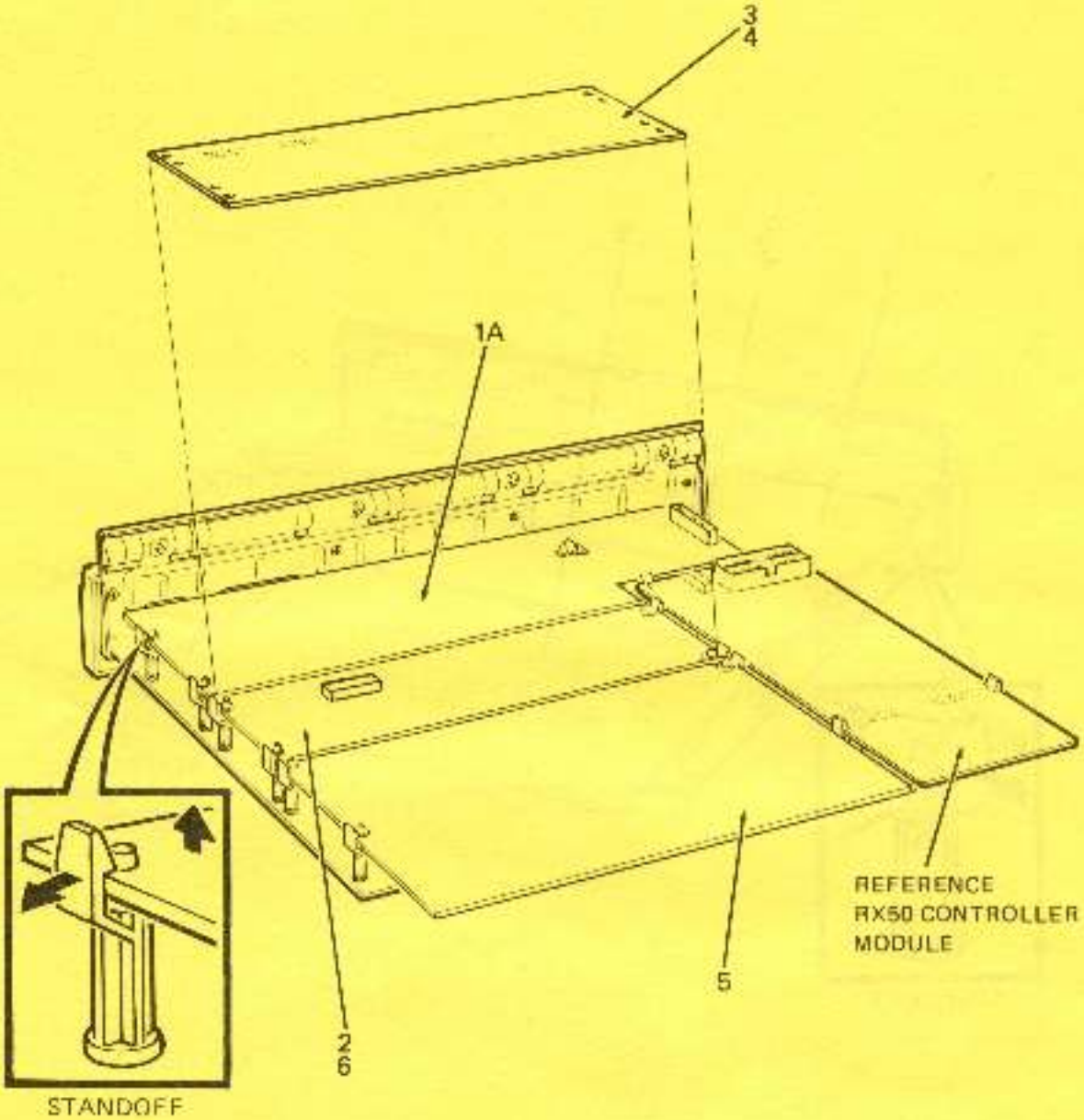

PC100-09A

Figure 9. PC100 Options (Sheet 2 of 4)

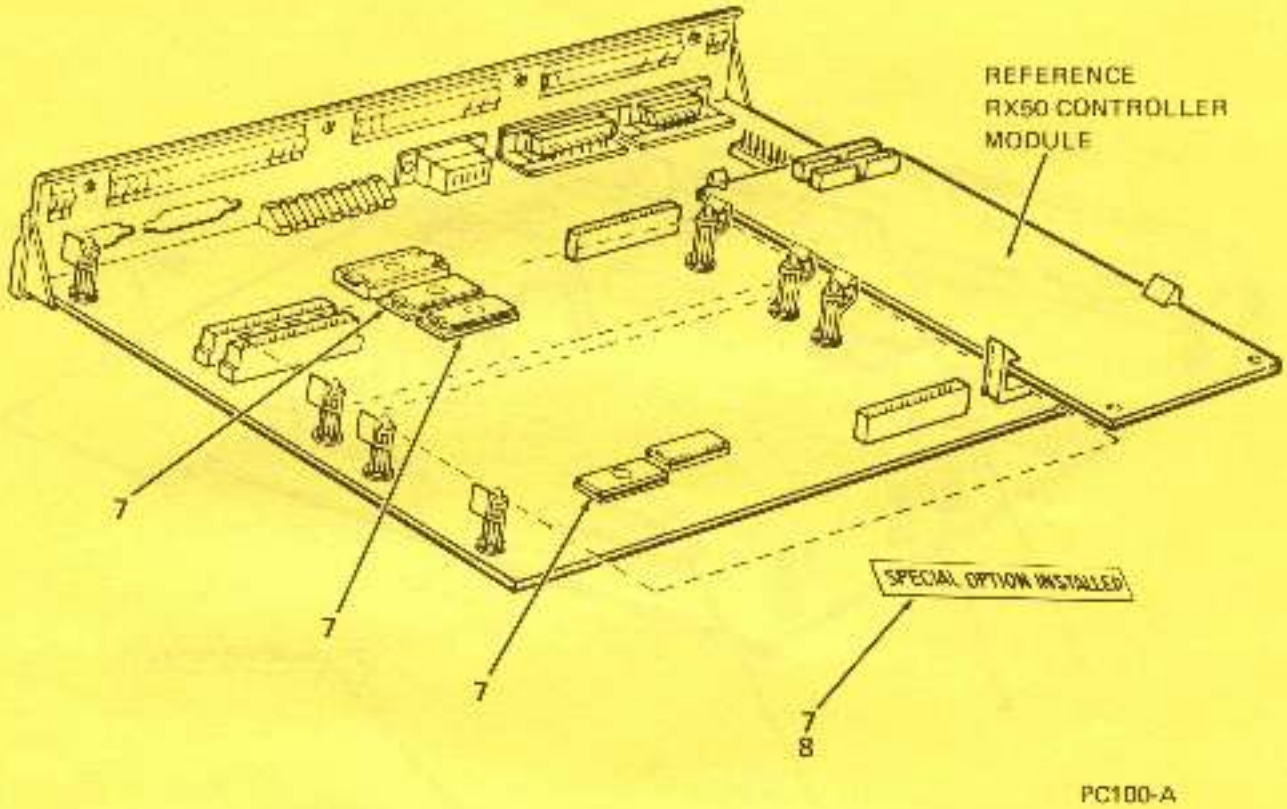

PC100-098

Figure 9. PC100 Options (Sheet 3 of 4)

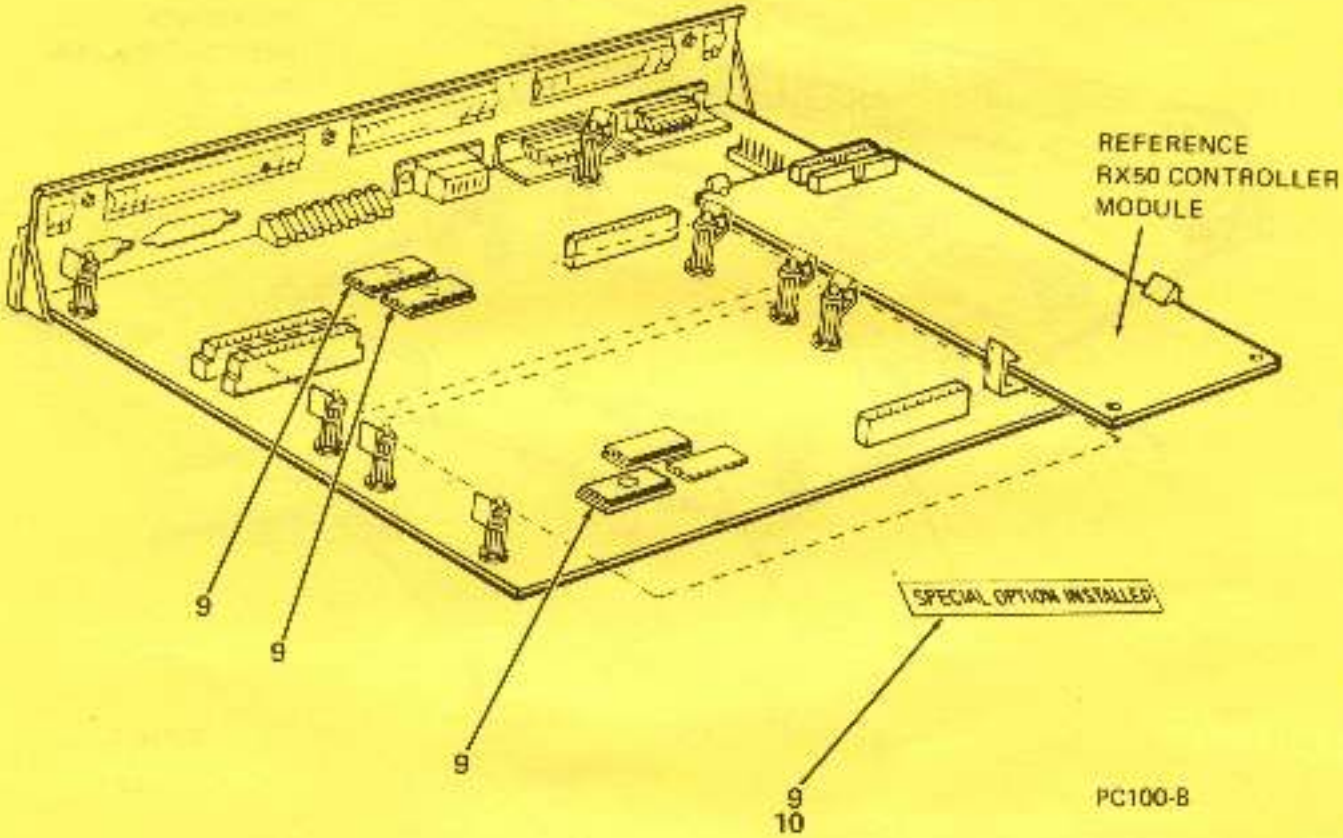

PC100-09C

Figure 9. PC100 Options (Sheet 4 of 4)

FIG. & ITEM NO.	DESCRIPTION	DEC PART NO.	ECO CUT-IN	USED ON CODE	REF FIG NO.
9–	PC100 OPTIONS				
	Code X – Used on Models PC100-A, PC100-A1	PC100-A		X	
	Code Y – Used on Models PC100-B2, PC100-B3, PC100-B4, PC100-B5, PC100-B6, PC100-B7	PC100-B		Y	
1	*EXTENDED COMMUNICATION OPTION	PC1XX-BB			12
1A	*PC100-A WINCHESTER DISK OPTION	———			13
	*PC100-B WINCHESTER DISK OPTION	———			14
2	*MEMORY ADAPTER OPTION (See Note 1)	PC1XX-AK		X	10
X– 3	*64K Memory Board	PC1XX-AA		X	
X–	*192K Memory Board	PC1XX-AB		X	
X–	*128K Memory Board	PC1XX-AC		Y	
X–	*256K Memory Board	PC1XX-AD		Y	
4	*64K Add-on Memory Chips	PC1XX-AY		Y	
	*256K Add-on Memory Chips	PC1XX-AZ		Y	
5	*COLOR GRAPHICS OPTION	PC1XX-BA			15
6	*NUMERICAL DATA CO-PROCESSOR (8087) (See Note 2)	PC1XX-EA			11
7	*TECHNICAL CHARACTER SET	PC1XX-FA		X	
8	**Label, "Special Option Installed"	36-23792-01			
9	*TECHNICAL CHARACTER SET	PC1XX-FB		Y	
10	**Label, "Special Option Installed"	36-23792-01			

Note 1: The Memory Adapter Option allows the use of additional memory options on the PC100-A. These options are: PC1XX-AC, PC1XX-AD, PC1XX-AY, PC1XX-AZ. These are normally used only on the PC100-B. The above memory options (Items 3, 4) can only be used on the PC100-A by using the Memory Adapter Option or the Numerical Data Co-Processor (See Note 2).

Note 2: The Numerical Data Co-Processor (NDC) can be used on either the PC100-A or PC100-B. When the NDC is installed, any Rainbow memory may be used (PC1XX-AA, PC1XX-AB, PC1XX-AC, PC1XX-AD, PC1XX-AY, PC1XX-AZ).

X = Purchasable Parts from PSG (See Green Section)

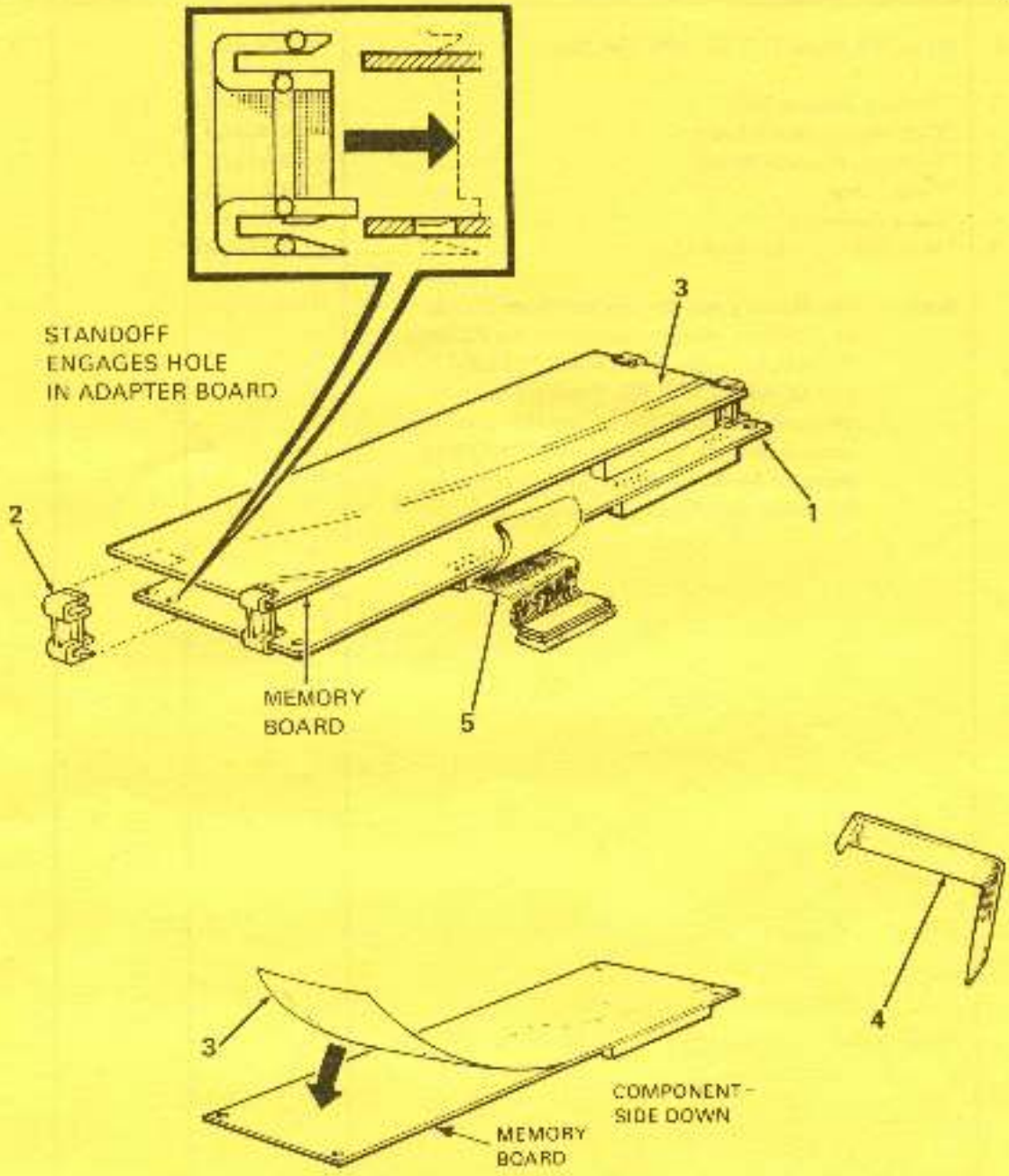

PC100-10

Figure 10. Memory Adapter Option

FIG. & ITEM NO.	DESCRIPTION	DEC PART NO.	ECO CUT-IN	USED ON CODE	REF FIG NO.
X-10-	MEMORY ADAPTER OPTION (See Note)	PC1XX-AK		X	9
1	*Memory Adapter Board	54-16535-01			
2	*Clip, Module Board Spacer	74-30494-01			
3	*Insulator, Memory Board	74-30512-01			
4	*Puller, Chip	74-30612-01			
5	*Cable Assembly	17-00662-01			
6	*MUP Diskette (Not Shown)	BL-T905A-BV			
	Note: The Memory Adapter Option allows the use of additional memory options on the PC100-A. These options are: PC1XX-AC, PC1XX-AD, PC1XX-AY, PC1XX-AZ. These are normally used only on the PC100-B. The above memory options can only be used on the PC100-A by using the Memory Adapter Option or the Numerical Data Co-Processor.				

X = Purchasable Parts from PSG (See Green Section)

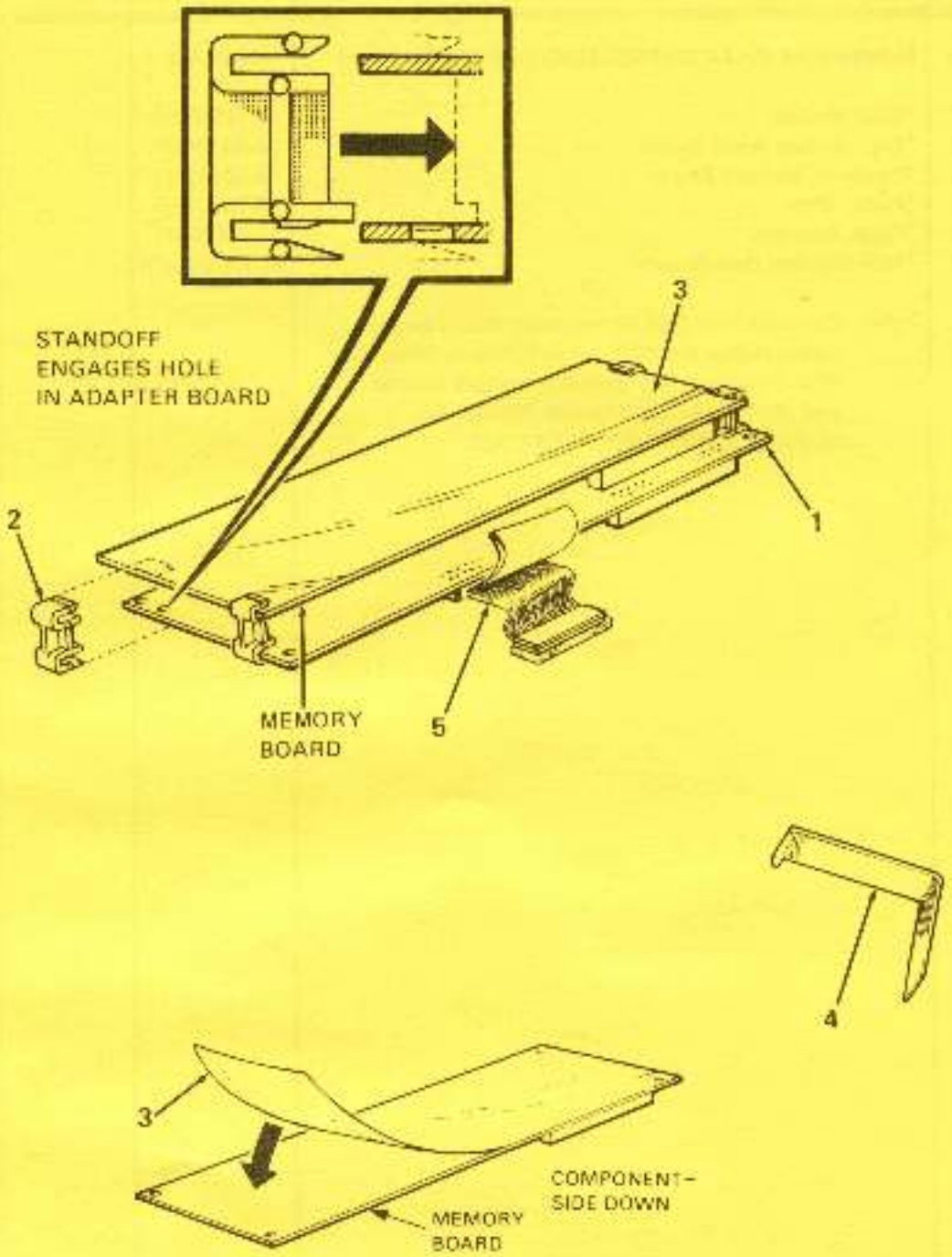

PC100-11

Figure 11. Numerical Data Co-Processor

FIG. & ITEM NO.	DESCRIPTION	DEC PART NO.	ECO CUT-IN	USED ON CODE	REF FIG NO.
11-	NUMERICAL DATA CO-PROCESSOR (8087) (See Note)	PC1XX-EA			9
1	*8087 Module	54-16535-02			
2	*Clip, Module Board Spacer	74-30494-01			
3	*Insulator, Memory Board	74-30512-01			
4	*Puller, Chip	74-30612-01			
5	*Cable Assembly	17-00662-01			
6	*NDP Diskette (Not Shown)	BL-DE92A-BV			
	Note: The Numerical Data Co-Processor (NDC) can be used on either the PC100-A or PC100-B. When the NDC is installed, any Rainbow memory may be used (PC1XX-AA, PC1XX-AB, PC1XX-AC, PC1XX-AD, PC1XX-AY, PC1XX-AZ).				

X = Purchasable Parts from PSG (See Green Section)

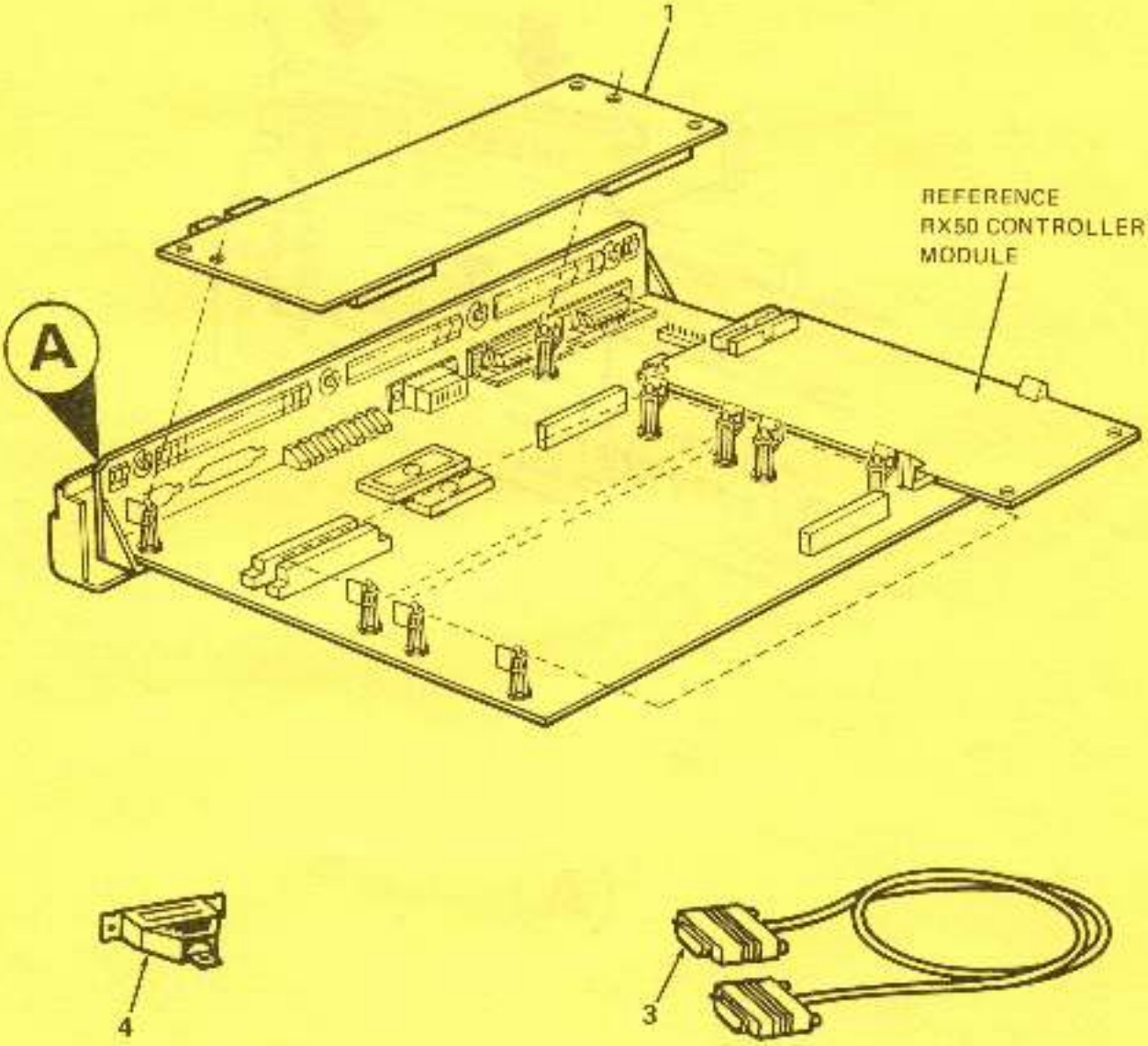

PC100-12

Figure 12. Extended Communication Option (Sheet 1 of 2)

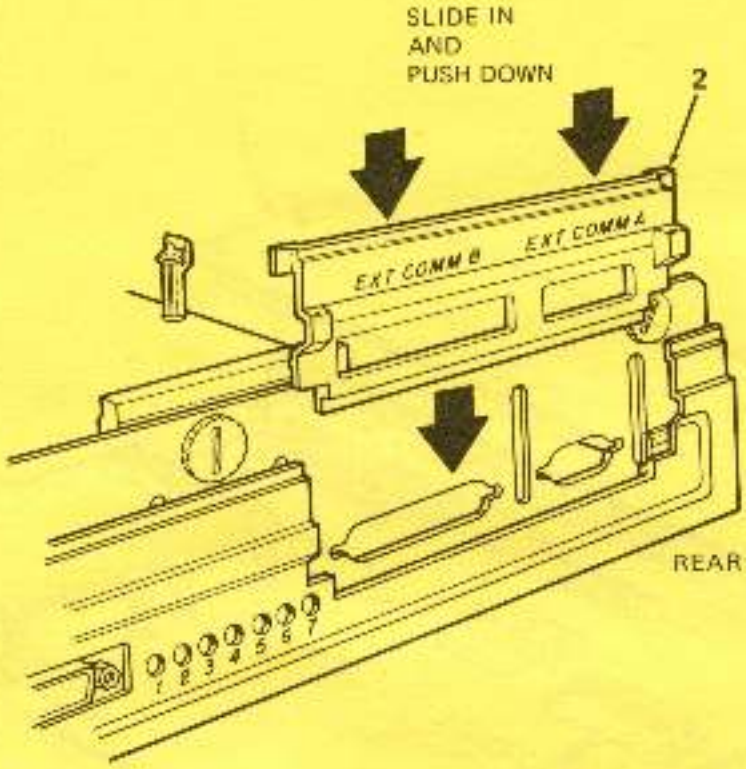

A

PC100-12A

Figure 12. Extended Communication Option (Sheet 2 of 2)

FIG. & ITEM NO.	DESCRIPTION	DEC PART NO.	ECO CUT-IN	USED ON CODE	REF FIG NO.
12–	EXTENDED COMMUNICATION OPTION	PC1XX-BB			9
X– 1	*Extended Communication Option Module	54-15703-01			
2	*Plate, Option	74-27175-01			
3	*Modem Cable	BCC15			
X– 4	*Plug, Loopback	12-15336-04			
5	*Option Test Diskette (Not Shown)	BL-V174A-MV			

X = Purchasable Parts from PSG (See Green Section)

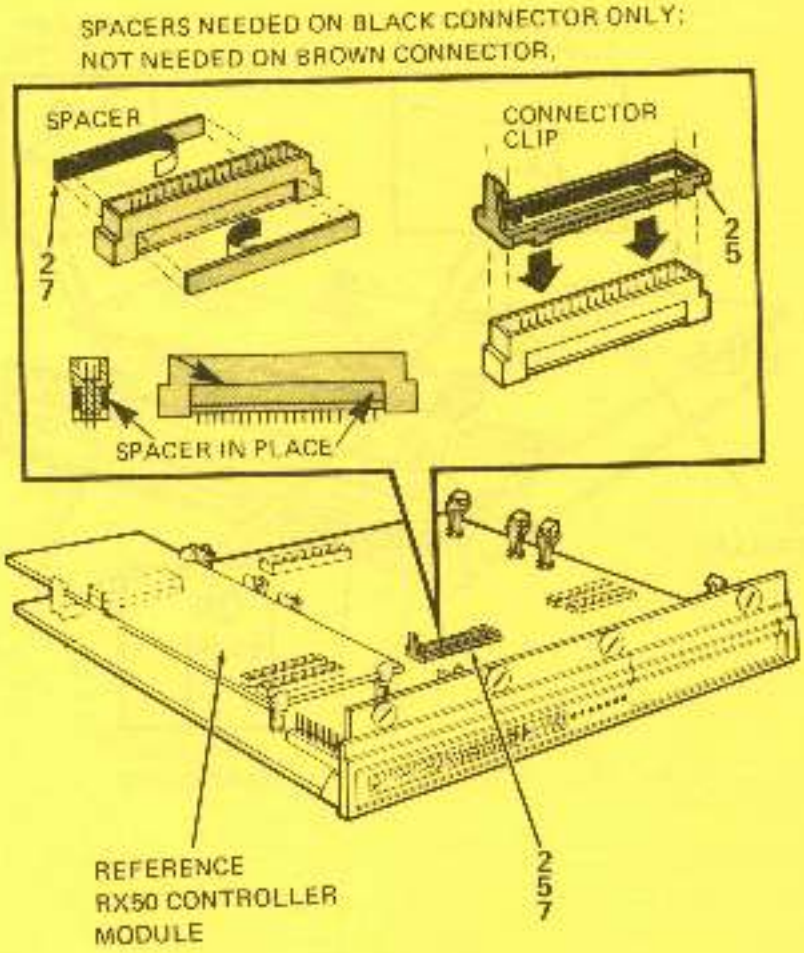

PC100-13

Figure 13. PC100-A Winchester Disk Option (Sheet 1 of 4)

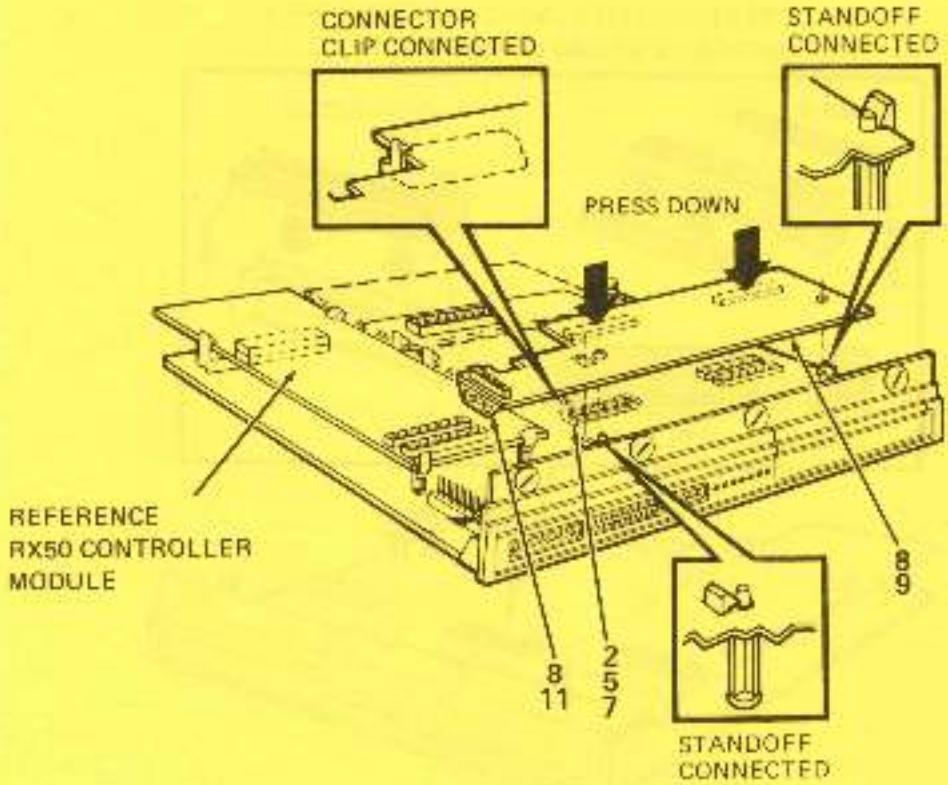

PC100-13A

Figure 13. PC100-A Winchester Disk Option (Sheet 2 of 4)

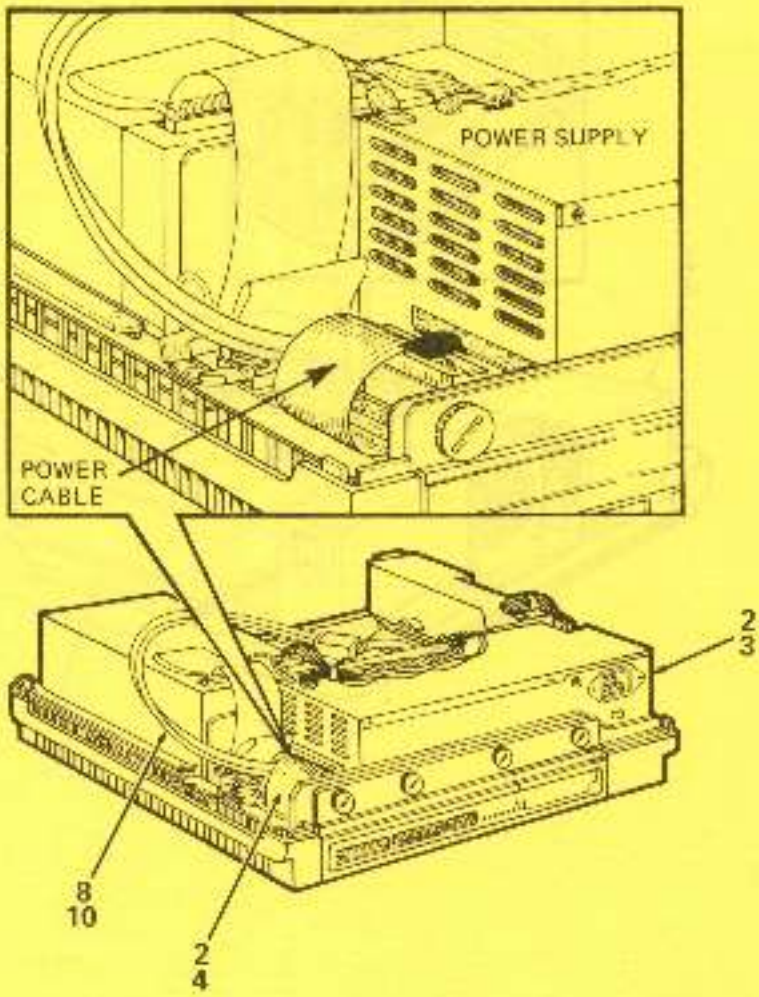

PC100-13B

Figure 13. PC100-A Winchester Disk Option (Sheet 3 of 4)

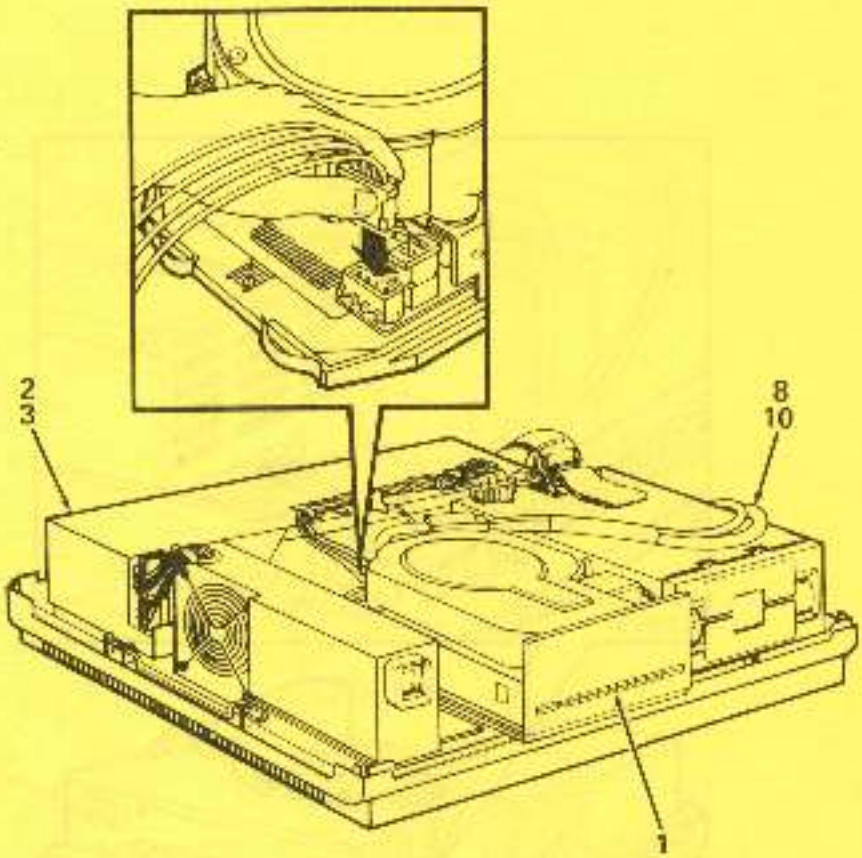

PC100-13C

Figure 13. PC100-A Winchester Disk Option (Sheet 4 of 4)

FIG. & ITEM NO.	DESCRIPTION	DEC PART NO.	ECO CUT-IN	USED ON CODE	REF FIG NO.
13–	PC100-A WINCHESTER DISK OPTION	———		X	9
1	*RD50 5 MByte Disk Drive	RD50			
	*RD51 10 MByte Disk Drive	RD51			
2	*UPGRADE KIT	PC1XX-UA			
3	**H7842 Power Supply	H7842-D			
4	**Power Cable (4 inches)	17-00318-02			
5	**Clip, Connector	74-28702-02			
6	**Diagnostic Diskette (Not Shown)	BL-W968A-M			
7	**Spacer	74-29790-01			
8	*CONTROLLER ASSEMBLY	PC1XX-DA			
X– 9	**Controller Module	54-16019-00			
10	**Cable, Controller to Drive	17-00427-01			
11	**Standoff	74-29164-01			

X = Purchasable Parts from PSG (See Green Section)

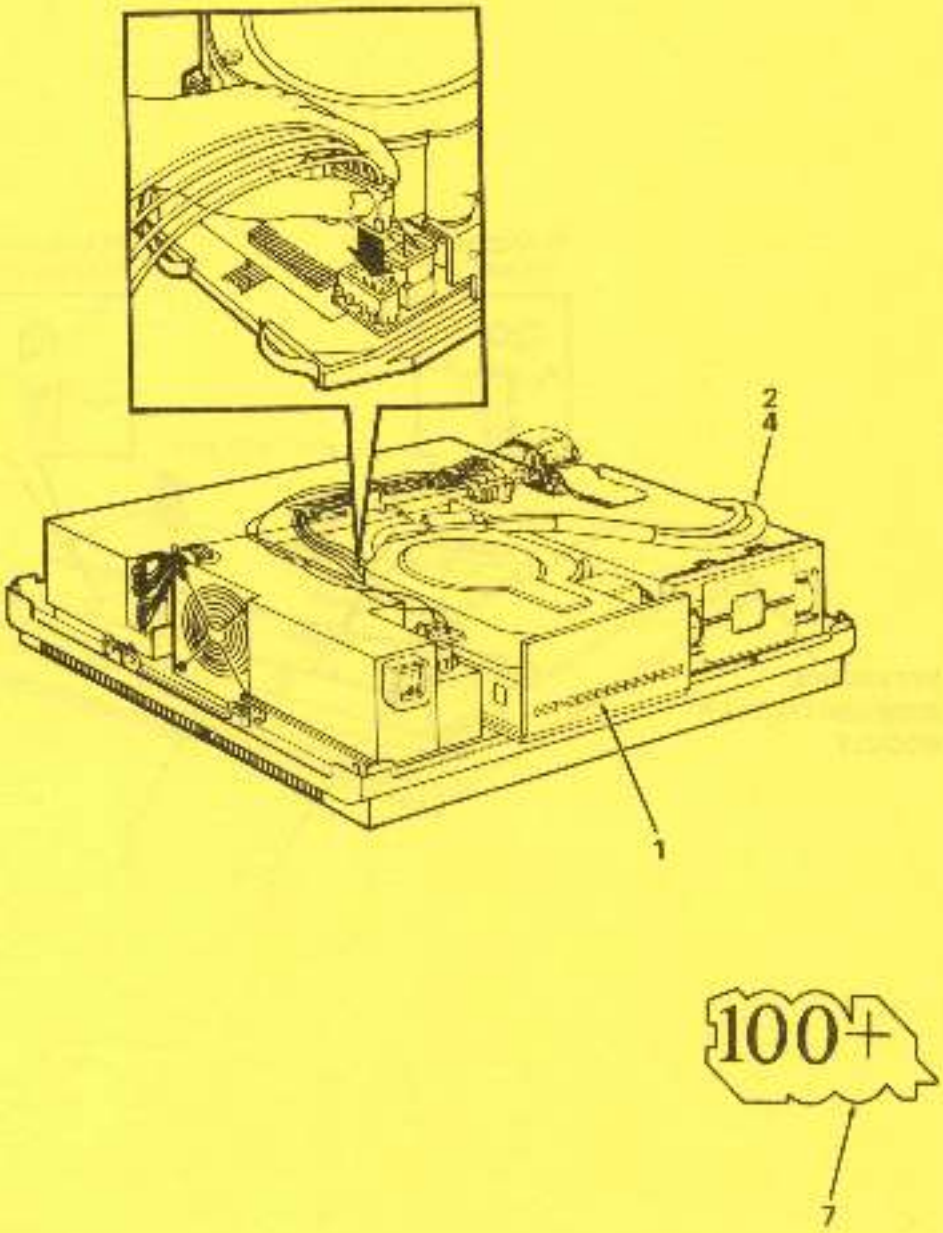

PC100-14

Figure 14. PC100-B Winchester Disk Option (Sheet 1 of 2)

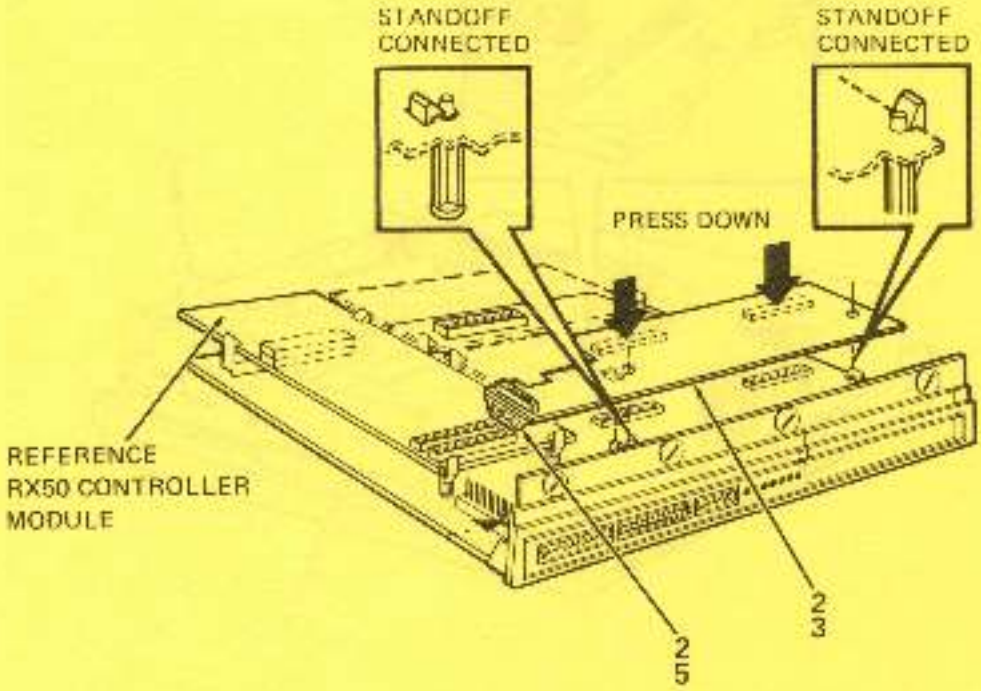

PC100-14A

Figure 14. PC100-B Winchester Disk Option (Sheet 2 of 2)

FIG. & ITEM NO.	DESCRIPTION	DEC PART NO.	ECO CUT-IN	USED ON CODE	REF FIG NO.
14–	PC100-B WINCHESTER DISK OPTION	———		Y	9
1	*RD50 5 MByte Disk Drive	RD50			
	*RD51 10 MByte Disk Drive	RD51			
2	*CONTROLLER ASSEMBLY	PC1XX DA			
3	**Controller Module	54-16019-00			
4	**Cable, Controller to Drive	17-00427-01			
5	**Standoff	74-29164-01			
6	**Diagnostic Diskette (Not Shown)	BL-W968A-MJ			
7	*Label, "100+"	36-22267-01			

X = Purchasable Parts from PSG (See Green Section)

FIG. & ITEM NO.	DESCRIPTION	DEC PART NO.	ECO CUT-IN	USED ON CODE	REF FIG NO.
15–	COLOR GRAPHICS OPTION	PC1XX-BA			9
1	*COLOR GRAPHICS OPTION HARDWARE	PC1XX-BC			
X– 2	**Color Graphics Option Module	54-15688-01			
3	**Cable, Color Video (BCC17)	17-00284-02			

X = Purchasable Parts from PSG (See Green Section)

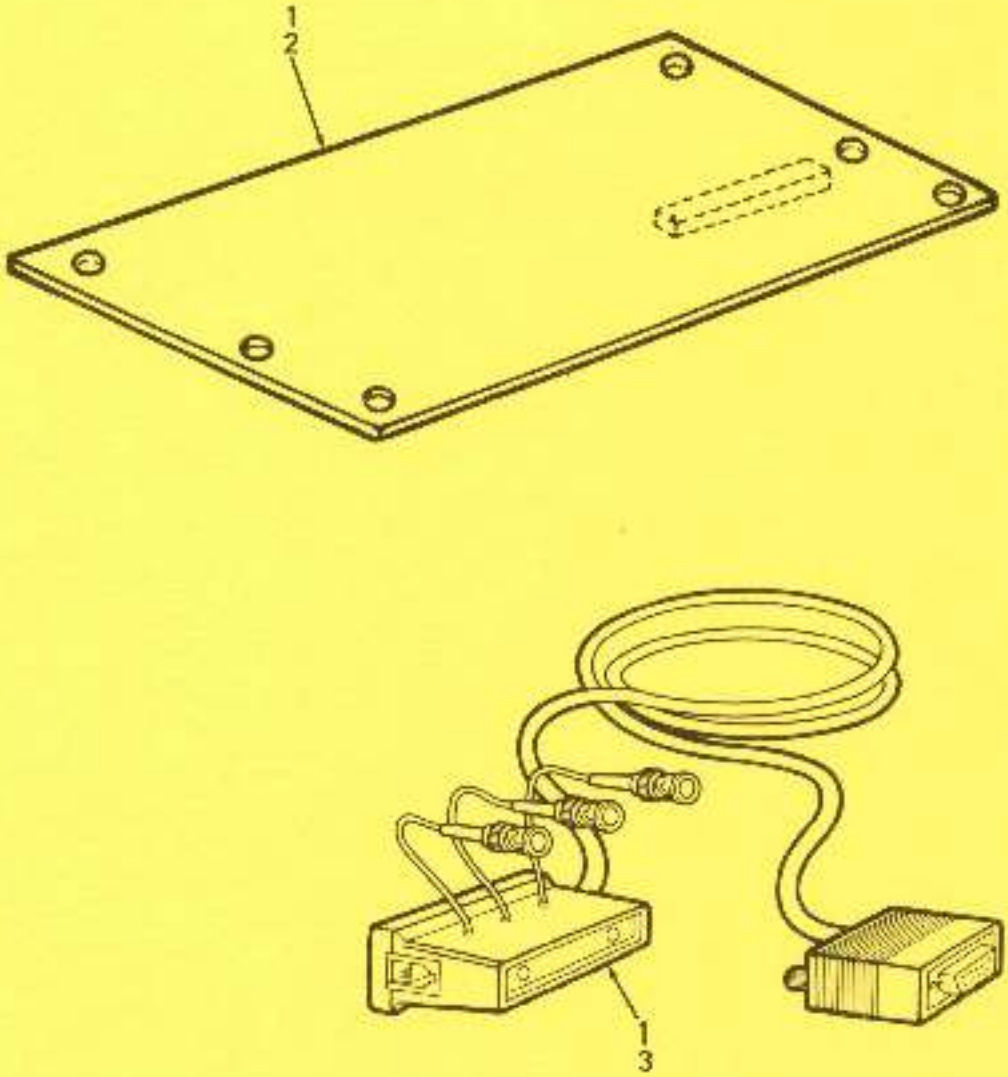

PC100-15

Figure 15. Color Graphics Option

ILLUSTRATED PARTS BREAKDOWN
COMMENT SHEET

Any and all comments and suggestions for correcting errors and/or additional information to improve this manual will be reviewed and researched for possible use when this manual is revised and/or reprinted. Enter your comments and suggestions in the form provided below and return to Technical Documentation.

MODEL PC100 RAINBOW 100 SYSTEM UNIT PUBLICATION NO. EK-SB100-IP-003

FIGURE NO. _____ ITEM NO. _____
CHANGE FROM _____
CHANGE TO _____

FIGURE NO. _____ ITEM NO. _____
CHANGE FROM _____
CHANGE TO _____

FIGURE NO. _____ ITEM NO. _____
CHANGE FROM _____
CHANGE TO _____

FIGURE NO. _____ ITEM NO. _____
CHANGE FROM _____
CHANGE TO _____

FIGURE NO. _____ ITEM NO. _____
CHANGE FROM _____
CHANGE TO _____

FIGURE NO. _____ ITEM NO. _____
CHANGE FROM _____
CHANGE TO _____

ADDITIONAL COMMENT(S)

Please describe your position. _____

Name _____ Organization _____

Street _____ Department _____

City _____ State _____ Zip or Country _____

Fold Here

Do Not Tear – Fold Here and Staple

digital

No Postage
Necessary
If Mailed in the
United States

BUSINESS REPLY MAIL

FIRST CLASS PERMIT NO 33 MAYNARD, MA

POSTAGE WILL BE PAID BY ADDRESSEE

Digital Equipment Corporation
Educational Services
129 Parker Street, PK03-2/H31
Maynard, MA 01754

digital

PURCHASABLE PARTS LIST

PC100

SELF-MAINTENANCE PRODUCTS

Purchasable Part (X) is a part which is available from the manufacturing source and may be purchased from Digital's Peripherals Supplies Group (PSG).

Many lower level assemblies and components are provided for self-maintenance.

Other parts may not be available because of the manufacturing process and/or testing capabilities. In these cases refer to the IPB for the appropriate assembly which contains the unavailable part.

How To Order:

Direct-To-Factory by Phone or by Mail
Toll Free Telephone Ordering

Continental U.S. and Puerto Rico
Call 800-258-1710 (8:30 a.m. to 6:00 p.m. ET)

Alaska, Hawaii and New Hampshire
Call 603-884-6660 (8:30 a.m. to 6:00 p.m. ET)

International see page A-5

Direct Mail Ordering Purchase Orders Should Be Mailed To:

U.S. Customers
Digital Equipment Corporation
P.O. Box CS2008
Nashua, NH 03061

International Customers
Digital Equipment Corporation
PSG Business Manager
c.o. Digital's local subsidiary
See page A-5

PURCHASABLE PARTS LIST
section II

SELF-MAINTENANCE
PURCHASABLE PARTS LIST

TABLE OF CONTENTS

	PAGE
How to Order	Preceding Page
Recommended Spare Parts List	B-1
Spares Kits	B-2
Cables	B-3
Options	B-3
Tools	B-4
Maintenance Documentation	B-4
Digital Support Services	B-5
Digital Repairs and Customer Returns	B-6
Listing of International Offices	B-7

CATEGORY - RECOMMENDED SPARES PARTS LIST

The following is a list of loose piece spare parts which provide a 98% Level of Service (LOS).

To obtain information regarding spares supported by Digital's Installed Base Group, contact your Digital representative for a Maintenance Products Recommendation (MPR). The MPR provides specific Level of Service (LOS) offerings (i.e., 98%, 95%, 88%, 80%, 70%) and is subdivided by categories as follows:

- Recommended Spare Parts (Modules/Subassemblies)
- Components (I.C.s, Transistors, etc.)
- Tools and Test Equipment
- Preventive Maintenance Parts
- Hardware Documentation
- Supplies (Printer ribbons, Magnetic media, etc.)

NO.	PKG QTY	PART NUMBER	DESCRIPTION	VISUAL REFERENCE SEE IPB FIGURE NO.	VISUAL REFERENCE SEE IPB ITEM NO.	COMMENTS
1	1	H7842-D	SMALL SYSTEM UNIT POWER SUPPLY	N/S	N/S	
2	1	SRX50-AA	RX50-AA SPARE DRIVE	2	6	
3	1	12-11358-00	CONN, D SUB 25 POS ASSY RT. ANG	N/S	N/S	PC100-A ONLY
4	1	12-13185-03	FAN, 78 CFM, 115V, TUBE AXIAL LOW	5	2	PC100-A ONLY
5	1	12-14415-03	FUSE, REC BLOW, 500, 250V	N/S	N/S	
6	1	12-17051-04	SW, RKR 2PST ON-NONE-OFF	5	7	
7	1	12-19857-01	STANDOFF, NYLON X, 750 LG	3	11	PC100-ONLY
8	1	12-19917-02	CKT BKR 4.0 A 250V IP SERIES TRIP	5	7	
9	1	12-19914-01	SPRING, COMPRESSION, 165BDX1	4	7	
10	1	12-28123-01	SPRING, COMPRESSION, 300DX	1	5	
11	1	54-15482-08	RX50 CONTROLLER MODULE	1	3	
12	1	70-19505-01	TOP ENCLOSURE ASSY	2,2A	11,9	
13	1	70-19573-00	BOTTOM ENCLOSURE ASSY	2,2A	1,1	
14	1	70-19730-00	FLOPPY DRIVE HARNESS	6	14	
15	1	70-19941-00	CONN. PANEL ASSY	3	4	
16	1	70-19974-00	CPU ASSY, RAINBOW 100	1	2	PC100-A ONLY
17	1	70-19974-02	CPU ASSY, RAINBOW 100B LONG CLI	1A	2	PC100-B ONLY
18	1	70-20816-01	FAN ASSEMBLY	2A	4	PC100-B ONLY
19	1	74-26242-01	LATCH, WIRE, RIGHT	4	2	
20	1	74-26246-01	BEZEL, SWITCH	5	8	
21	1	74-26537-01	HANDLE, LATCH WIRE	4	4	
22	1	98-08525-00	BUMPER, ROUND ACH BACK RUBBER	4	9	

N/S = NOT SHOWN

025

CATEGORY - SPARES KIT

Spares kits have been designed to support many of the popular Digital hardware devices and provide an economical and efficient means of sparing for self-maintenance customers. The kit approach to purchasing spare parts hardware has several advantages.

Spares kits are engineer designed to:

- o Contain the right mix and quantity of parts required for initial inventory.
- o Provide up to 98% Level of Service (LOS).
- o Supply parts for up to ten devices for a period of up to one year.

Spares kits provide a cost effective method of:

- o Obtaining initial spares with confidence.
- o Realizing savings of kits versus loose piece purchases.
- o Providing a portable on-site inventory for fast repair by swapping the defective part.

In addition, normal delivery for spares kits is off-the-shelf. Current delivery status may be obtained through your local Digital sales office.

PC100-A SPARES KIT

ORDERING PART NUMBER 4A-PC100-00

Spares kit contents:

NO.	PKG QTY	PART NUMBER	DESCRIPTION	VISUAL REFERENCE SKS IPB FIGURE NO.	VISUAL REFERENCE SKS IPB ITEM NO.	COMMENTS
1	1	H7842-D	SMALL SYS UNIT POW SUPPLY	2,2A, 6A	7,6	
2	1	RRX50-AA	RX50-AA SPARE DRIVE	1,2,2A	7,6,5	SEE NOTE 1
3	1	12-13185-03	FAN, TUBE AXIAL 4.5" 20 CFM 115 VAC 50	5	2	
4	1	12-17851-04	SW, RKR, LT 2PST ON-NONE-OFF 16A250V	5	7	
5	1	54-15482-00	PC100 RX50 CONTROLLER	1	3	
6	1	70-19974-00	CPU ASSY, RAINBOW 100	1,3	2	

N/S = Not Shown
NOTE 1 = Ordering part number differs from basic part number.

D25

PC100-B2 SPARES KIT

ORDERING PART NUMBER 4A-PC100-B2

Spares kit contents:

NO.	PKG QTY	PART NUMBER	DESCRIPTION	VISUAL REFERENCE SEE IPB FIGURE NO.	ITEM NO.	COMMENTS
1	1	N7862-D	SMALL SYS UNIT POW SUPPLY	2,2A	7,6	
2	1	SRX50-AA	RX50-AA SPARE DRIVE	1,2, 2A	7,6,5	SEE NOTE 1
3	1	12-17051-04	SW, RKR 2-ST ON-NONE-OFF	5	7	
4	1	54-15482-00	PC100 RX50 CONTROLLER	1	3	
5	1	70-19974-02	CPU ASSY, MAIN 100T LANG CLI	1A	2	
6	1	70-20816-01	FAN ASSEMBLY	2A,7	4	

N/S = Not Shown
NOTE 1 = Ordering part number differs from basic part number.

CATEGORY - CABLES

NO.	PKG QTY	PART NUMBER	DESCRIPTION	VISUAL REFERENCE SEE IPB FIG NO.	ITEM NO.	COMMENTS
1	1	17-00283-00	VIDEO CABLE ASSEMBLY (6 FT.)	1,1A	6,6	
2	1	17-00317-04	CABLE ASSEMBLY 34 COND SHIELDED	N/S	N/S	
3	1	17-00319-02	MOTHERBOARD POWER CABLE ASSEMBLY (4 IN.)	2	8	
4	1	17-00482-01	CABLE ASSEMBLY (10 FT.)	1,1A	9,8	

N/S = Not Shown

CATEGORY - OPTIONS

NO.	PKG QTY	PART NUMBER	DESCRIPTION	VISUAL REFERENCE SEE IPB FIGURE NO.	ITEM NO.	COMMENTS
1	1	4A-PC1XX-AA	64K MEMORY OPTION	9	3	
2	1	4A-PC1XX-AB	192K MEMORY OPTION	9	2	
3	1	4A-PC1XX-AC	256KB MEMORY OPTION	9	1	
4	1	4A-PC1XX-AD	256KB MEMORY OPTION	9	1	
5	1	4A-LK201-AA	KEYBOARD ASSY, USA/CANADA	N/S	N/S	
6	1	4A-LK201-AE	KEYBOARD ASSY, UK LEGENDS	N/S	N/S	
7	1	4A-LK201-AG	KEYBOARD ASSY, GERMAN LEGENDS	N/S	N/S	
8	1	4A-LK201-AK	KEYBOARD ASSY, SWISS/FRENCH	N/S	N/S	
9	1	4A-LK201-AP	KEYBOARD ASSY, FRENCH LEGENDS	N/S	N/S	
10	1	54-15688-01	PC100 GRAPHICS OPTION MODULE	15	2	
11	1	54-15701-00	EXTENDED COMMUNICATION OPTION MODULE	12	1	
12	1	12-15336-04	CONNECTOR, LOOPBACK	12	4	USED W/PC1XX-BB
13	1	54-16819-00	RD50/51 CONTROLLER MODULE	13,14	9,3	

N/S = Not Shown

CATEGORY - TOOLS

NO.	PKG QTY	PART NUMBER	DESCRIPTION	COMMENTS
1	1	H325	I/O SERIAL LOOPBACK CONNECTOR	

CATEGORY - MAINTENANCE DOCUMENTATION

NO.	PKG QTY	PART NUMBER	DESCRIPTION	COMMENTS
1	1	EK-LK201-IP	LK201 KEYBOARD ILLUSTRATED PARTS BREAKDOWN	
2	1	EK-P188B-IN	RAINBOW 100 INSTALLATION GUIDE	
3	1	EK-P188B-OM	RAINBOW 100 OWNERS MANUAL	
4	1	EK-P100B-IN	RAINBOW LANGUAGE ROM INSTALL.	
5	1	EK-PC100-PS	RAINBOW 100 POCKET SERVICE GUIDE	
6	1	EK-PC100-TM	RAINBOW 100 TECHNICAL MAN.	
7	1	EK-PCCOL-IN	RAINBOW COLOR GRAPHICS INST.	
8	1	EK-PCL1B-IN	RAINBOW EXTENDED COMM INSTALL.	
9	1	EK-PCMXA-IN	RAINBOW MEMORY ADAPTER INSTALL.	
10	1	EK-PCMXB-IN	RAINBOW MEMORY EXTENSION INST.	
11	1	EK-PCROM-IN	RAINBOW LANGUAGE ROM INSTALL.	
12	1	EK-PCWIN-IN	RAINBOW HARD DISK INSTALL.	
13	1	EK-R100X-IN	RAINBOW 100X INSTALLATION	
14	1	EK-R100E-OM	RAINBOW 100X OWNERS MANUAL.	
15	1	EK-RBMXC-IN	RAINBOW 100B MEMORY INSTALL.	
16	1	EK-RBMXE-IN	RAINBOW 100B MEMORY INSTALL.	
17	1	EK-RBWIN-IN	RAINBOW 100B WINCHESTER INSTALL.	
18	1	EK-RBWIN-SV	RAINBOW 100B DISK TEST MESSAGE	
19	1	EK-RD50A-IP	RD50 HARD DISK ILLUSTRATED PARTS BREAKDOWN	
20	1	EK-RD51A-IP	RD51 HARD DISK ILLUSTRATED PARTS BREAKDOWN	
21	1	EK-SB100-IP	RAINBOW 100 ILLUSTRATED PARTS BREAKDOWN	
22	1	EK-VR241E-PS	VR241 MONITOR POCKET SERV GDE	
23	1	EK-VR201-IP	VR201 MONITOR ILLUSTRATED PARTS BREAKDOWN	
24	1	EK-VR241-IN	VR241 MONITOR INSTALLATION	
25	1	EK-VR241-PS	VR241 MONITOR POCKET SERV GDE	

DIGITAL SUPPORT SERVICES

Support Services

A wide range of maintenance and customer services are available from Digital to support your Digital hardware. Depending on the type of equipment, you can select an alternative which meets your service needs; from complete Digital maintenance to complete self-maintenance.

There are four service groups which are dedicated to satisfying the post sales service needs of Digital customers. Consult the nearest U.S. Digital sales office for more information. International see Page A-5

Accessories & Supplies Group

Self-Maintenance Products

All spare parts necessary for self-maintenance are available from Digital. Self-maintenance products are designed to support the remotely located sites as well as those centrally located. On site spare parts contribute to higher uptime.

Educational Services

Through the Educational Services Group, Digital customers can be trained from inductory to State of the Art in software, hardware, and system management. Courses are offered at worldwide locations and at the customer's site.

Software Services

Software Services is an organization dedicated to supporting Digital software by providing software consulting, software maintenance, and software components to Digital customers. Presently there are over 2,000 software specialists located worldwide to assist customers with software needs.

Field Service

This organization provides Digital customers with both on-site and off-site maintenance service. There are a variety of contractual on-site service programs for terminals and computer systems. Per Call service is also provided in which maintenance is provided on a non-contractual time and material basis.

DIGITAL REPAIRS AND CUSTOMER RETURNS

The Customer Returns Center

The Customer Returns Center (CRC) is dedicated to the off-site service needs of the self-maintenance customer. CRC provides service on a wide range of Digital products. In addition, the CRC honors the corporate return-to-factory warranty for all module types (excluding CSS). The CRC's standard service offering is: DECmailer.

DECmailer is Digital's premium return-to-factory repair program. It provides qualified Digital customers with a fast, easy, economical way of handling module and subassembly repair.

The program features:

- a five day turn-around
- a large repair menu
- an Emergency Dispatch Service
- convenient monthly billing
- quarterly account statements
- a 90 day warranty
- and pre-addressed shipping labels

DECmailer packages, including a price list and the agreement, are available on request by calling 800-225-5385. In Massachusetts, Alaska, and Hawaii, call 617-938-2280.

The CRC also offers a repair service for both in and out of warranty modules and sub-assemblies. It's called the Module Repair Service and it's designed for repair of modules not covered by DECmailer, and for customers who do not require the quick response of DECmailer. To use the Module Repair Service you must call the CRC to get a Return Authorization Number (RA#). To get an RA#, or for prices and lead times, call the 800# listed above.

DECmailer Service is available in the U.S. only.

For International information contact your local Digital subsidiary see page A-5

LISTING OF INTERNATIONAL OFFICES

AUSTRALIA
Digital Equipment Australia Pty. Ltd.
Accessories & Supplies Group
P.O. Box 232
No. Adelaide, So. Australia 5006
Australia
Telephone: (61)-(8)-2674299
Telex: 790-82825

AUSTRIA
Digital Equipment Corporation, GmbH
Shopping City Sued
A-2334 Vosendorf-Sued
Austria
Telephone: (43)-(222)-6776410
Telex: 847-134995

BELGIUM
Digital Equipment SA/NV
Rue de l'Aeronef, 1/
Luchtschipstraat, 1
Bruxxeles B-1140 Brussel
Belgium
Telephone: (32)-(2)-2425095
Telex: 846-25297

CANADA
Digital Equipment of Canada, Ltd.
Accessories & Supplies Group
940 Belfast Rd.
Ottawa, Ontario K2K 2A6
Canada
Telephone: (800)-(267)-6146
(613)-234-7726
Telex: 610-562-8732

DENMARK
Digital Equipment Corporation A/S
Kristineberg 3
DK-2100 Copenhagen O
Denmark
Telephone: (45)-(1)-299666
Telex: 855-19675

FINLAND
Digital Equipment Corporation OY
PL 16
SF-02201 Espoo 20
Finland
Telephone: (358)-(0)-423511
Telex: 857-122324

FRANCE
Digital Equipment France
25 Place de la Loire
Rungis 94528
France
Telephone: (33)-(1)-6872570
Telex: 842-204270

GERMANY (WEST)
Digital Equipment GmbH
DEC - Park
Freischuetzstrasse 91
D-8000 Munich 81
West Germany
Telephone: (49)-(89)-95910
Telex: 841-5215780

HOLLAND
Digital Equipment Corporation B.V.
Kaap Hoorndreef 38
NL-3563 AV Utrecht
Holland
Telephone: (31)-(30)-631222
Telex: 844-40370

HONG KONG
Digital Equipment Hong Kong Ltd.
Accessories & Supplies
5-7 Asean Plaza
94, Granville Road
Tsimshatsui East
Kowloon
Hong Kong
Telephone: (852)-(3)-7315211
Telex: 780-46424

IRELAND
Digital Equipment International Ltd.
Park House
North Circular Road
IRL-Dublin 7
Ireland
Telephone: (353)-(1)-308433
Telex: 852-31023

ISRAEL
Digital Equipment (DEC) Ltd.
Accadia Junction
Maskit St.
46733 Herzliya
Israel
Telephone: (972)-(3)-5257157
Telex: 342563

ITALY
Digital Equipment S.p.A.
Viale Falvio Testi 11
Ang. Via Gorki 105
20092, Cinisello Balsamo
Milan
Italy
Telephone: (39)-261797
Telex: 843-333435

JAPAN
Digital Equipment Corporation Int'l.
Accessories & Supplies Group
Sunshine 60, P.O. Box 1135
1-1 Higashi Ikebukuro 3-Chrome
Toshima-ku, Tokyo 170
Japan
Telephone: (81)-(3)-9897111
Telex: 781-26428

NETHERLANDS
Digital Equipment bv
Kaap Hoorndreef 66
NL 3563 Av Utrecht
Telephone: (31)-30631222
Telex: 884-48245

NEW ZEALAND
Digital Equipment New Zealand Ltd.
P.O. Box 17039
Greenland, Auckland
New Zealand
Telephone: (64)-(9)-591280
Telex: 791-2726

NORWAY
Digital Equipment Corporation A/S
Pottemarkerveien 8
N-Oslo 9
Norway
Telephone: (47)-(2)-160290
Telex: 856-19079/16903

PUERTO RICO AND CARIBBEAN
Digital Equipment Latin America
Accessories and Supplies Group
P.O. Box 11038
Fernandez Juncos Station
Santurce 00910
Puerto Rico
Telephone: (800)-258-1710
(809)-754-7575
Telex: 385-7056

SINGAPORE
Digital Equipment Singapore (Pte) Ltd.
San Centre, First Floor
Chin Swee Road, Singapore 0316
Republic of Singapore
Telephone: (65)-919266
Telex: 786-25435

SOUTHEAST EUROPE AND NORTHERN AFRICA
ALGERIA, CYPRUS, GREECE, MALTA, MOROCCO, PORTUGAL, TUNISIA, TURKEY
Digital Equipment Corporation Int'l
SEENA Branch
Route des Jeunes 9
CH 1211 Geneva 26
Switzerland
Telephone: (41)-(22)-429930
Telex: 289201

SPAIN
Digital Equipment Corporation S.A.
Sucursal en Espana
Agustin de Foxa 17
Madrid 16
Spain
Telephone: (34)-(1)-7331900
Telex: 831-42192

SWEDEN
Digital Equipment AB
Accessories & Supplies Group
Englundavagen 7
17124 Selna
Sweden
Telephone: (46)-(8)-7300200
Telex: 854-17050

SWITZERLAND
Digital Equipment Corporation AG
Schaffhauserstrasse 144
CH-8302 Kloten/ZH
Switzerland
Telephone: (41)-(1)-8169111
Telex: 845-56059

UNITED KINGDOM
Digital Equipment Co. Ltd.
Units 9 & 10, Stadium Way
Scours Lane
GB-Reading RG3 6BX
England
Telephone: (44)-(734)-25533
Telex: 851-847188

FOR ALL OTHER COUNTRIES OUTSIDE OF EUROPE CONTACT
GENERAL INTERNATIONAL DISTRICT
Digital Equipment Corporation
Accessories & Supplies Group
P.O. Box 577
Littleton, Massachusetts 01460
Telephone: (617)-486-7100
Telex: 710-347-7651

PURCHASABLE PARTS LIST

COMMENT SHEET

Any and all comments and suggestions to improve this manual will be reviewed and researched for possible use when this manual is revised and/or reprinted. Enter your comments and suggestions in the form provided below and return to Digital Equipment Corporation.

MODEL PC100 RAINBOW 100 SYSTEM UNIT PUBLICATION NO. EK-SB100-IP-003

PAGE _____ SECTION _____ ITEM _____

COMMENT(S)

PAGE _____ SECTION _____ ITEM _____

COMMENT(S)

ADDITIONAL COMMENT(S)

Please describe your position _____

Name _____ Organization _____

Street _____ Department _____

City _____ State _____ Zip or Country _____

Fold Here

Do Not Tear – Fold Here and Staple

digital

No Postage Necessary if Mailed in the United States

BUSINESS REPLY MAIL

FIRST CLASS PERMIT NO. 33 MAYNARD, MA

POSTAGE WILL BE PAID BY ADDRESSEE

Digital Equipment Corporation
Attn: Circulation Dept. MK01/W83
Continental Boulevard
Merrimack, N.H. 03054

For more information about the products or services described on the previous pages, check the appropriate box(es) below.

- [ ] Documentation Products Directory
- [ ] Maintenance Documentation Service (MDS) Brochure
- [ ] DEC-O-Log Brochure
- [ ] Hardware Documentation Kit Handbook
- [ ] Spares Kit Handbook
- [ ] Maintenance Aids Handbook
- [ ] Please add me to your mailing list

Name_____

Title_____

Organization_____

Address_____

City, State, Zip_____

Tel./Ext._____

IPB-PC10D

Fold Here

Do Not Tear – Fold Here and Staple

digital

No Postage Necessary if Mailed in the United States

BUSINESS REPLY MAIL

FIRST CLASS PERMIT NO 33 MAYNARD, MA

POSTAGE WILL BE PAID BY ADDRESSEE

Digital Equipment Corporation
Attn: Circulation Dept. MKO1/W83
Continental Boulevard
Merrimack, N.H. 03054