pdp8/e

pdp8/F & pdp8/m

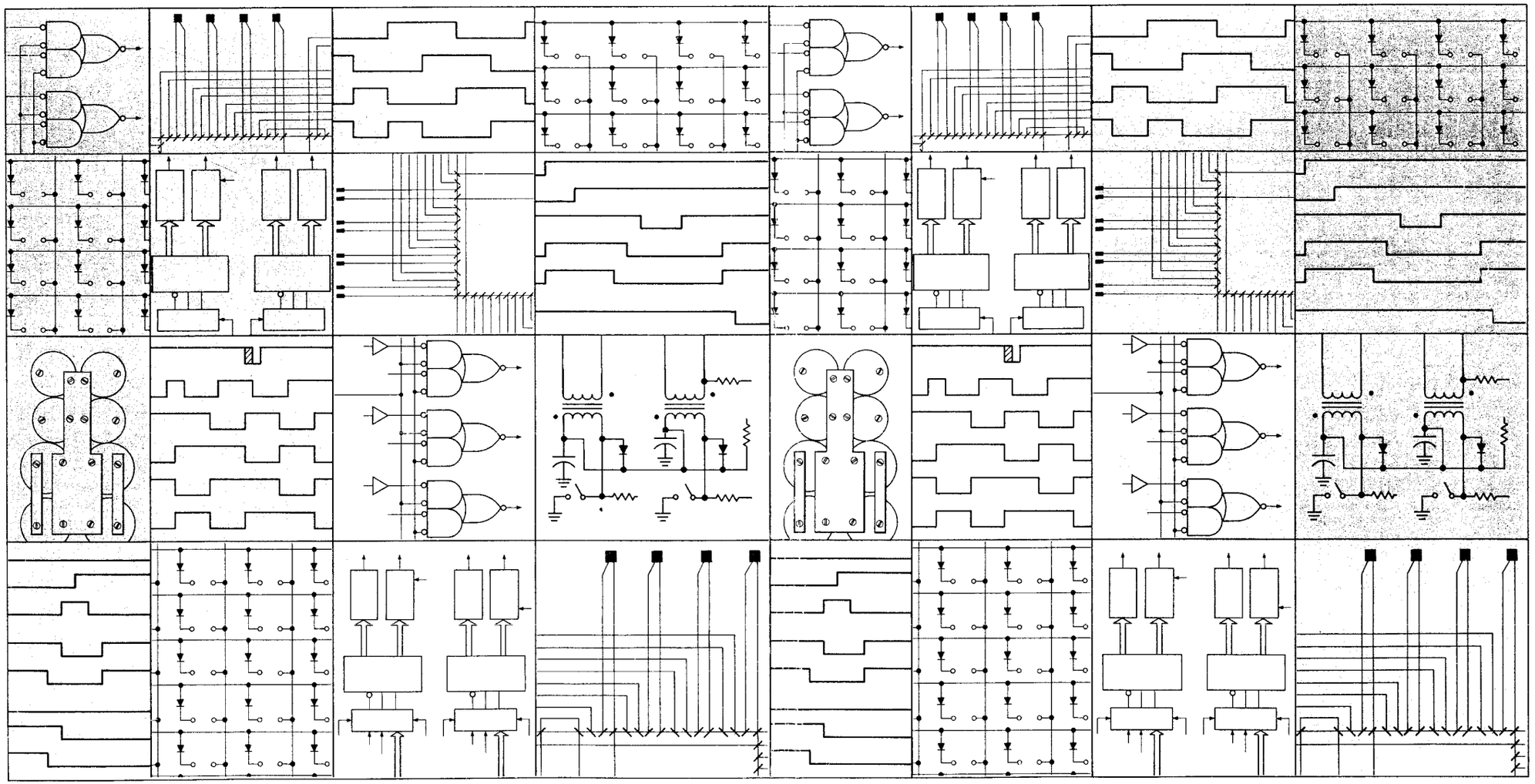

digital

RK8-E disk cartridge control engineering drawings

digital equipment corporation · maynard, massachusetts

digital EQUIPMENT CORPORATION MAYNARD MASSACHUSETTS

DRAWING DIRECTORY

"THIS DRAWING AND SPECIFICATIONS, HEREIN, ARE THE PROPERTY OF DIGITAL EQUIPMENT CORPORATION AND SHALL NOT BE REPRODUCED OR COPIED OR USED IN WHOLE OR IN PART AS THE BASIS FOR THE MANUFACTURE OR SALE OF ITEMS WITHOUT WRITTEN PERMISSION. COPYRIGHT © , DIGITAL EQUIPMENT CORPORATION"

CUSTOMER PRINT SET INDEX

SEQUENCE

RK8-E DISK & CONTROL	B-DD-RK8-Ø
FIELD INSTALL. & ACCEPT. PROC.	A-SP-RK8-E-6
RK8-E DISK & CONTROL	A-PL-RK8-Ø-Ø
ACCESSORY SHIPPING LIST	A-AL-RK8-E-3
DISK CONTROL	D-UA-RK8-E-Ø
MAJOR STATES & TIMING FLOW	D-TD-RK8-E-2
FLOW DIAGRAM RK8-E	D-FD-RK8-E-1
DATA BUFFER & STATUS	D-CS-M71Ø4-Ø-1
MAJOR REGISTERS	D-CS-M71Ø5-Ø-1
CONTROL RK8-E	D-CS-M71Ø6-Ø-1
CONTROL CABLE ASSY	D-AD-7009026-0-0
RK8-E CONTROL CABLE MODULE	D-CS-M993-Ø-1
H851 EDGE CONNECTOR	B-CS-H851-Ø-1
DEC PACK ASSY	B-DD-RKØ5-Ø

SEQUENCE

THIS IS PRINT SET

UNIT VARIATIONS

VAR	TITLE	PRINT SET 1
RK8-EA	RKØ5-AA&CONTROL, 115V 60 HZ	x
RK8-EB	RKØ5-BB&CONTROL, 230V 60 HZ	x
RK8-EC	RKØ5-BC&CONTROL, 115V 50 HZ	x
RK8-ED	RKØ5-BD&CONTROL, 230V 50 HZ	x

REVISIONS: REV / CHG. NO. / DATE

USED ON OPTION/MODEL	
PDP8E	
PDP8F	
PDP8M	

SHEET 1 OF 3

DRN. FERGUSON	DATE 10/17/2	TITLE RK8-E DISK & CONTROL
CHK'D. FERGUSON	DATE 10/17/2	
PROJ. ENG.	DATE 10/11/72	
PROD. R.K. Johnson	DATE 10-18-72	SIZE B / CODE DD / NUMBER RK8-Ø / REV
FIELD SERV. R.A. Clair	DATE 10/18/72	DIST C

DRB 106

DEC 16-(325)-1062-1A-R972

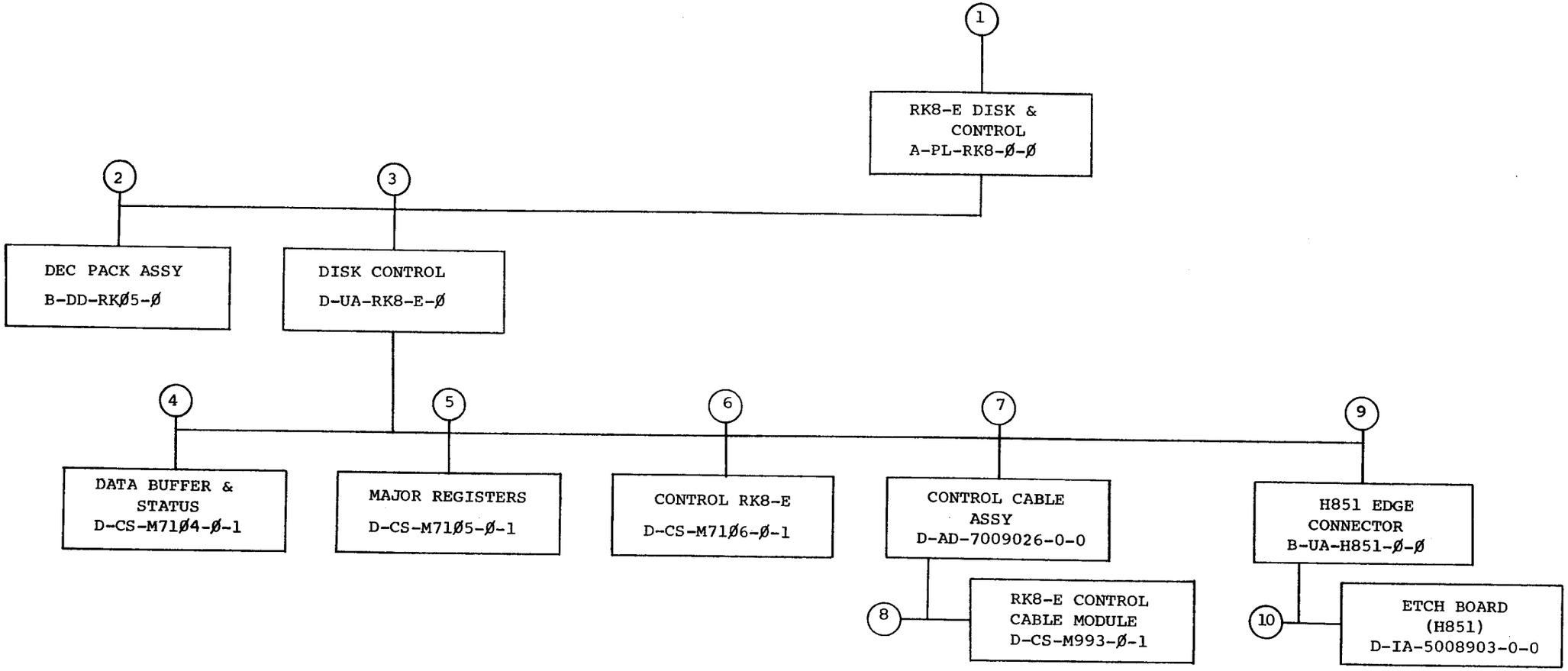

TITLE		SIZE	CODE	NUMBER	REV
RK8-E DISK & CONTROL	SHEET 2 OF 3	B	DD	RK8-Ø	

DRB 107
DEC 16—(325)—1062—3—N871

CUSTOMER PRINT SET	MFG. SET	FIND NO.	DRAWING NO.	REV	NO OF SHT	DESCRIPTION	OPTION NO./FILE DATE
			MECHANICAL/ELECTRICAL				
x		1	A-PL-RK8-Ø-Ø		1	RK8-E DISK & CONTROL	
X		2	B-DD-RKØ5-Ø	B	5	DEC PACK ASSY	
x		3	D-UA-RK8-E-Ø		1	DISK CONTROL	
x			D-FD-RK8-E-1		4	FLOW DIAGRAM RK8-E	
x			D-TD-RK8-E-2		1	MAJOR STATES & TIMING FLOW	
x			A-AL-RK8-E-3		1	ACCESSORY SHIPPING LIST	
			A-SP-RK8-E-4		3	MODULE TEST & ACCEPTANCE FOR RK8-E	
			A-SP-RK8-E-5		39	RK8E DISK CONTROL	
x			A-SP-RK8-E-6		5	FIELD INSTALL & ACCEPT. PROC.	
			A-SP-RK8-E-7		5	IN-HOUSE ACCEPT. PROC.	
x		4	D-CS-M71Ø4-Ø-1	A	7	DATA BUFFER & STATUS	
			K-CO-M71Ø4-Ø-4		1	X-Y COORDINATE HOLE LOCATION	
			D-AH-M71Ø4-Ø-5		1	ASSY/DRILLING HOLE LAYOUT	
			B-MH-M71Ø4-Ø-6		1	MODULE ECO HISTORY	
x		5	D-CS-M71Ø5-Ø-1	A	5	MAJOR REGISTERS	
			K-CO-M71Ø5-Ø-4		1	X-Y COORDINATE HOLE LOCATION	
			D-AH-M71Ø5-Ø-5		1	ASSY DRILLING HOLE LAYOUT	
			B-MH-M71Ø5-Ø-6		1	MODULE ECO HISTORY	
x		6	D-CS-M71Ø6-Ø-1	A	6	CONTROL RK8-E	
			K-CO-M71Ø6-Ø-4		1	X-Y COORDINATE HOLE LOCATION	
			D-AH-M71Ø6-Ø-5		1	ASSY/DRILLING HOLE LAYOUT	
			B-MH-M71Ø6-Ø-6		1	MODULE ECO HISTORY	

CUSTOMER PRINT SET	MFG SET	FIND NO.	DRAWING NO.	REV	NO OF SHT	DESCRIPTION	OPTION NO./FILE DATE
			MECHANICAL/ELECTRICAL				
x		7	D-AD-7009026-0-0		2	CONTROL CABLE ASSY,	
x		8	D-CS-M993-Ø-1	*	2	RK8-E CONTROL CABLE MODULE	
			K-CO-M993-Ø-4		1	X-Y COORDINATE HOLE LOCATION	
			D-AH-M993-Ø-5		1	ASSY/DRILLING HOLE LAYOUT	
			B-MH-M993-Ø-6		1	MODULE ECO HISTORY	
x		9	B-UA-H851-Ø-Ø	A	1	H851 EDGE CONNECTOR	
			A-PL-H851-Ø-Ø	A	1	H851 EDGE CONNECTOR	
			B-CS-H851-Ø-1	A		EDGE CONNECTOR H851	
			C-AH-H851-Ø-5	A	1	ASSY/DRILLING HOLE LAYOUT	
			B-MH-H851-Ø-6		1	MODULE ECO HISTORY	
		10	D-IA-5008903-0-0	A	1	ETCH BOARD (H851)	
			C-AH-5008903-0-5		1	ASSY/DRILLING HOLE LOCATION	

CUSTOMER PRINT SET CODES	
X =	PRINT OF DOCUMENT INCLUDED IN PRINT SET
C =	INCLUDES ALL PRINTS INDICATED ON DOCUMENT
S =	CONFIDENTIAL AUTHORIZED SIGNATURE REQUIRED

TITLE		SIZE	CODE	NUMBER	REV
RK8-E DISK & CONTROL	SHEET 3 OF 3	B	DD	RK8-Ø	

DRB 108

DEC 16-(325)-1062-2B-R972

This drawing and specifications, herein, are the property of Digital Equipment Corporation and shall not be reproduced or copied or used in whole or in part as the basis for the manufacture or sale of items without written permission.

DIGITAL EQUIPMENT CORPORATION
MAYNARD, MASSACHUSETTS

DATE 10-12-72

TITLE RK8E FIELD INSTALLATION AND ACCEPTANCE PROCEDURE

REVISIONS

REV	DESCRIPTION	CHG NO	ORIG	DATE	APPD BY	DATE

ENG	APPD	SIZE	CODE	NUMBER	REV
10 12 72	10/12	A	SP	RK8-E-6	

DEC FORM NO. DRA 107A

ENGINEERING SPECIFICATION
digital CONTINUATION SHEET

TITLE RK8E FIELD INSTALLATION AND ACCEPTANCE PROCEDURE

1.0 SHIPPING HARDWARE

1.1 RK8E Control

1.1.1 M7104

1.1.2 M7105

1.1.3 M7106

1.2 RK05 Disk Drive (Maximum of 4 drives per control)

1.2.1 95 to 130VAC @ 60 ± 0.5 Hz - RK05-AA

1.2.2 190 to 260VAC @ 60 ± 0.5 Hz - RK05-AB

1.2.3 95 to 130 VAC @ 50 ± 0.5 Hz - RK05-BA

1.2.4 190 to 260 VAC @ 50 ± 0.5 Hz - RK05-BB

1.3 Interface Cables and Terminator

1.3.1 Interface cable between RK8E control and RK05 - 7009026

1.3.2 Interface cable from one RK05 to another. BC11A

1.3.3 Terminator Module (last RK05) M930

1.4 (1)Disk Cartridge, HD16 Sector, 30-10350-02.

2.0 SHIPPING SOFTWARE

2.1 RK8E Diskless Control Test

Maindec-08-DHRKA-A-PB
Maindec-08-DHRKA-A-D

2.2 RK8E Drive Control Test

Maindec-08-DHRKB-A-PB
Maindec-08-DHRKB-A-D

2.3 RK8E Formatter Program

Maindec-08-DHRKD-A-PB
Maindec-08-DHRKD-A-D

2.4 RK8E Data Reliability Program

Maindec-08-DHRKC-A-PB
Maindec-08-DHRKC-A-D

SIZE	CODE	NUMBER	REV
A	SP	RK8-E-6	

DEC FORM NO 16-1022 DRA 108

3.0 UNPACKING AND INSTALLATION

3.1 Unpack and inspect RK05 using the procedure in the RK05 Disk Drive Maintenance Manual, Chapter 2.

3.2 Using the Shipping Hardware and Software lists, verify that all items are present.

3.3 Insure power on the PDP-8E, 8M, 8F is turned off.

3.4 Check the M7104 to insure that the device code jumpers are in the correct configuration (normally 674X), refer to Table 1.

NOTE: The diagnostic programs normally recongnizes Program Device Code 674X. If it desired to operate with a different code, refer to the Diagnostic Document's Section headed "Change Program Device Codes".

TABLE 1

Octal Code	Jumpers Installed
674X	W2 W4 W6
675X	W2 W3 W4
676X	W1 W2 W6
677X	W1 W2 W3

3.5 Check M7105 module to insure that the priority jumpers are in the correct configuration, refer to Table 2.

3.0 UNPACKING AND INSTALLATION (continued)

TABLE 2

Break Priority	Jumpers Installed
Ø	W1 W4
1*	W2 W3 W5

*Normally shipped with priority 1 jumpers installed.

3.6 Connect the 7009026 cable to the Berg connector on the M7106 module.

3.7 Insert the RK8E modules into the Omnibus (refer to UA-RK8-E-Ø). Refer to Table 2-3 in Volume I of the PDP-8E Maintenance Manual for installation priorities.

3.8 Install H851 top connectors between the modules (refer to UA-RK8-E-Ø).

3.9 Following the procedure in the RK05 Maintenance Manual, Chapter 2, install the RK05.

4.0 ACCEPTANCE

4.1 Requirements for Acceptance

A. ASR33 teletype, or equivalent.
B. Programmers console.
C. At least 4K of Read/Write Memory.

4.2 Run, in order, the programs listed in the "Shipping Software", using the loading and operating procedures in each program's document. If any errors occur, refer to the errors section of the document to evaluate the printout, and Chapter 5 of the RK8E Maintenance Manual for aids in determining the problem.

TITLE RK8E FIELD INSTALLATION AND ACCEPTANCE PROCEDURE

4.0 ACCEPTANCE (continued)

4.3 Each program should be run the following amount of passes.

A. Diskless Control Test - Two Passes
B. Drive Control Test - Two Passes
C. Formatter Program - One Pass
D. Data Reliability Program - One Pass

4.4 Acceptable Errors

A. One read error during the Acceptance Procedure

DIGITAL EQUIPMENT CORPORATION
MAYNARD, MASSACHUSETTS

PARTS LIST

MADE BY D. KANEY DATE 8/22/72	CHECKED FERGUSON DATE 9/20/72	SECTION 1
ENG DATE 10/18/72	PROD R. K. Allen DATE 10-19-72	ISSUED SECT. 1

ITEM NO.	DWG NO./PART NO.	DESCRIPTION	RK8-EA	RK8-EB	RK8-EC	RK8-ED
1	D-UA-RKØ5-AA-Ø	DEC PACK DISK DRIVE 115 VAC 6Ø HZ	1	–	–	–
2	D-UA-RKØ5-AB-Ø	DEC PACK DISK DRIVE 115 VAC 5Ø HZ	–	–	1	–
3	D-UA-RKØ5-BA-Ø	DEC PACK DISK DRIVE 230 VAC 6Ø HZ	–	1	–	–
4	D-UA-RKØ5-BB-Ø	DEC PACK DISK DRIVE 230 VAC 5Ø HZ	–	–	–	1
5	D-UA-RK8-E-Ø	DISK CONTROL	1	1	1	1

TITLE	ASSY NO.	SIZE	CODE	NUMBER	REV.	ECO NO.
DISK & RK8-E CONTROL	—	A	PL	RK8-Ø-Ø		
	SHEET 1 OF 1	DIST.	G			

DEC FORM DRA 110 DEC 16-(325)-1031-N870

DIGITAL EQUIPMENT CORPORATION
MAYNARD, MASSACHUSETTS

ACCESSORY LIST

MADE BY D. KANEY DATE 8/22/72	CHECKED FERGUSON DATE 9/20/72	SECTION 1
ENG DATE 10/18/72	PROD R.K. Wilson DATE 10-19-72	ISSUED SECT. 1

LEGEND

- D DOCUMENT
- DN DOCUMENT CHANGE NOTICE
- PA PAPER TAPE ASCII
- PB PAPER TAPE BINARY
- PM PAPER TAPE READ-IN-MODE

ITEM NO.	DWG NO./PART NO.	DESCRIPTION	RK8-E	RK8-EA	RK8-EB	RK8-EC	RK8-ED			KIT CHECK BY ____ DATE ____	INSTALLATION CHECK BY ____ DATE ____
1	B-DD-RK8-Ø	PRINT SET	1	1	1	1	1				
2	LIBKIT RK8-E	SOFTWARE KIT	1	1	1	1	1				
3	DEC-8E-HR38-D-RK8-E	MAINTENANCE MANUAL *	1	1	1	1	1				
		* UNTIL MAINTENANCE MANUAL BECOMES AVAILABLE SHIP ENGINEERING SPECS (A-SP-RK8-E-3)									

TITLE	ASSY. NO.	SIZE	CODE	NUMBER	REV.	ECO NO
ACCESSORY SHIPPING LIST RK8-E	SHEET 1 OF 1	A	AL	RK8-E-3		

DIST.

DEC 16-(325)-1075-N172 DRA 121

This drawing and specifications, herein, are the property of Digital Equipment Corporation and shall not be reproduced or copied or used in whole or in part as the basis for the manufacture or sale of items without written permission.

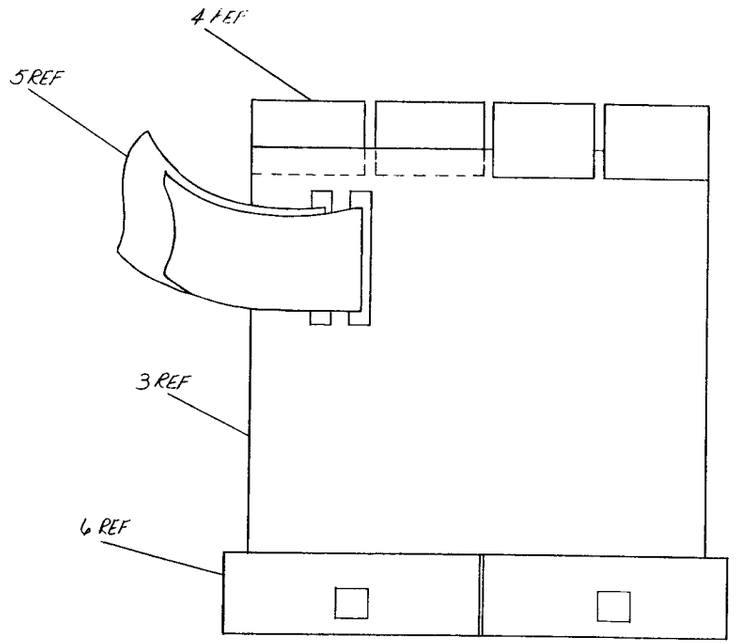

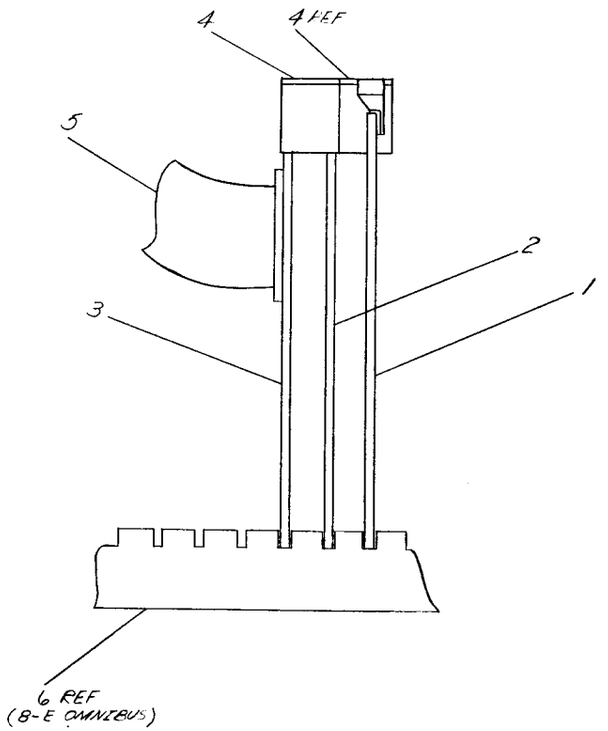

ITEM NO.	PARTS LIST	PART NO.	QTY.
5	M993 TO BERG	D-AD-7009026-00	1
4	EDGE CONNECTOR	B-UA-H857-00	4
3	CONTROL, RK8-E	D-CS-M7106-01	1
2	MAINT REGISTERS	D-CS-M7105-01	1
1	DATA BUFFER & STATUS	D-CS-M7104-01	1

FIRST USED ON OPTION/MODEL: RK8-E

UNLESS OTHERWISE SPECIFIED DIMENSION IN INCHES. TOLERANCES
DECIMALS: .XXX ± .005, .XX ± .02, .X ± .1
ANGLES: ±0° 30'
REMOVE BURRS AND BREAK SHARP CORNERS SURFACE QUALITY ✓

MATERIAL
FINISH

DRN. M. Cu... DATE 1/14/72
CHK'D. DATE
ENG. DATE
PROJ. ENG. DATE
PROD. DATE

NEXT HIGHER ASSY. B-D1-RK8-0
SCALE
SHEET 1 OF

digital EQUIPMENT CORPORATION MAYNARD MASSACHUSETTS

TITLE: DISK CONTROL

SIZE D | CODE UA | NUMBER RK8-E-0 | REV

DIST.

REVISIONS: REV. | CHANGE NO. | CHK

BRUNING 40-107 15968
DEC FORM NO DRG 100-A

This drawing and specifications, herein, are the property of Digital Equipment Corporation and shall not be reproduced or copied or used in whole or in part as the basis for the manufacture or sale of items without written permission.

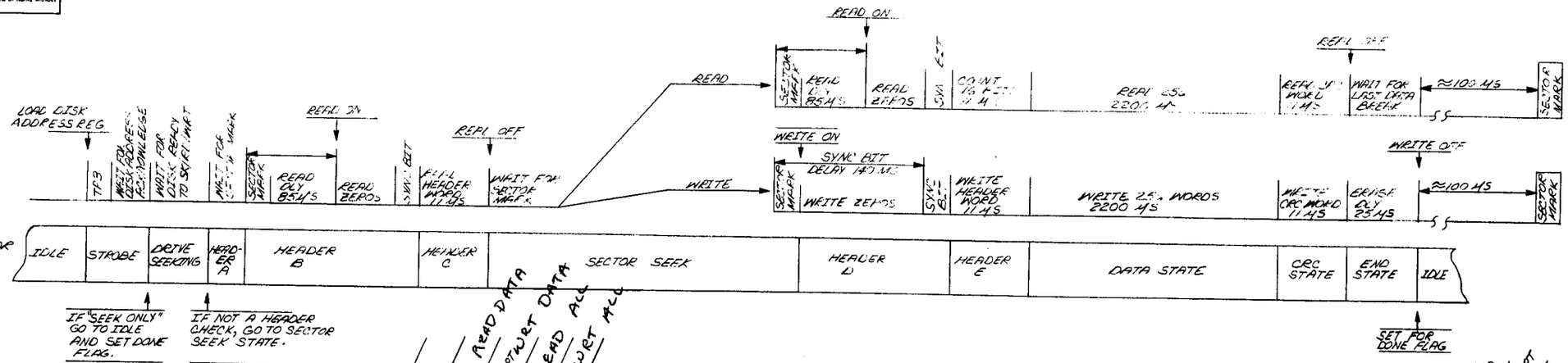

MAJOR STATE	FUNCTION	SEEK	SK/CHK/RD	SK/CHK/WRT READ DATA	SK/RD READ ALL	SK/WRT WRT ALL
IDLE	CONTROL IS NOT BUSY. WHEN THE GO COMMAND (FLAG) IS ISSUED THE C(AC) IS LOADED INTO THE CRC* AND SECTOR-SURFACE REGISTERS (DISK ADDRESS)	✓	✓	✓	✓	✓
STROBE	STROBE THE CYLINDER ADDRESS FROM THE DA REGISTER TO THE DRIVE AND WAIT FOR THE DRIVE'S "ADDRESS ACKNOWLEDGE" SIGNAL.	✓	✓	✓	✓	✓
DRIVE SEEKING	WAIT FOR THE "DISK READY TO SEEK/READ/WRITE" LEVEL FROM THE DRIVE TO SIGNIFY THAT THE HEADS ARE POSITIONED OVER THE CYLINDER ADDRESS.		✓	✓	✓	✓
HEADER A	WAIT FOR THE FIRST SECTOR MARK, THEN START THE READ DELAY.		✓	✓		
HEADER B	AT THE END OF THE READ DELAY TURN THE READ FLOP ON. ZEROS WILL BE READ UNTIL THE SYNC BIT WHICH SIGNIFYS THE BEGINNING OF A SECTOR'S DATA.		✓	✓		
HEADER C	READ THE 16 BIT HEADER WORD AND COMPARE IT WITH THE CYLINDER ADDRESS IN THE CRC REGISTER.		✓	✓		
SECTOR SEEK	IF THE HEADER WORD DOES NOT EQUAL THE CYLINDER ADDRESS SET THE "CYLINDE ADDRESS ERROR" AND GO TO THE IDLE STATE. AT EACH SECTOR MARK COMPARE THE SECTOR ADDRESS WITH THE DISK SECTOR ADDRESS LINES, IF EQUAL GO TO THE NEXT STATE.		✓	✓	✓	✓
HEADER D	AT THE BEGINNING OF THE SECTOR START THE "READ DELAY." AT THE END OF THE "READ DELAY" SET "READ." ZEROS WILL BE READ UNTIL THE SYNC BIT.		✓		✓	
	AT THE BEGINNING OF THE SECTOR START THE "SYNC BIT DELAY." ZERO'S ARE WRITTEN FOR THE LENGTH OF THE DELAY. A "ONE" BIT (SYNC BIT) IS THEN WRITTEN.			✓		✓

MAJOR STATE	FUNCTION	SEEK	SK/CHK/RD	SK/CHK/WRT	SK/RD	SK/WRT
HEADER E	COUNT AND IGNORE THE FIRST 16 BITS.		✓		✓	
	WRITE THE HEADER WORD SPECIFIED BY THE CRC REGISTER.			✓		✓
DATA STATE	READ 256-12 BIT WORDS FROM THE DISK INTO THE DATA BUFFER AND COMPUTE THE CRC. TRANSFER 12 BIT WORD FROM DATA BUFFER TO THE PROCESSOR. THE CONTROL WILL TRY TO KEEP DATA BUFFER EMPTY VIA DATA BREAKS.		✓		✓	
	WRITE ON THE DISK 256-12 BIT WORDS TRANSFERED FROM THE PROCESSOR TO THE DATA BUFFER. TRYING TO KEEP DATA BUFFER FULL VIA DATA BREAKS. COMPUTE CRC.			✓		✓
CRC STATE	READ AND COMPARE THE CRC WORD WITH THE COMPUTED CRC.		✓		✓	
	WRITE THE COMPUTED CRC ON THE DISK.			✓		✓
END STATE	IF THE CRC FROM THE DISK DOES NOT EQUAL THE COMPUTED CRC, SET THE "CRC ERROR." CLEAR READ. WHEN THE DATA BUFFERS ARE EMPTIED INTO THE PROCESSOR, SET THE DONE FLAG AND GO TO THE IDLE STATE.		✓		✓	
	START THE ERASE DELAY AND WRITE ZEROS. AT THE END OF THE ERASE DELAY CLEAR WRITE, SET THE DONE FLAG AND GO TO THE IDLE STATE.			✓		✓

$$CRC = \frac{3702 \text{ bits}}{X^{16} + X^{15} + 1}$$

16 Bit Header Word $\underbrace{5\ \emptyset\text{'s},\ 8 \text{ bit Cyl. Add},\ 3\ \emptyset\text{'s}}_{16 \text{ bits}}$

FIRST USED ON OPTION/MODEL	QTY.	DESCRIPTION	PART NO.	ITEM NO.
RK8-E		PARTS LIST		

UNLESS OTHERWISE SPECIFIED DIMENSION IN INCHES. TOLERANCES
DECIMALS .XXX = .005 .XX = .02 .X = .1
ANGLES ±0° 30'
REMOVE BURRS AND BREAK SHARP CORNERS SURFACE QUALITY ✓
MATERIAL —
FINISH —

DRN. [illegible] DATE 9/21/72
CHK'D. [illegible] DATE
ENG. [illegible] DATE
PROJ. ENG. [illegible] DATE
PROD. DATE
NEXT HIGHER ASSY. E-M1-RK8-Ø
SCALE
SHEET 1 OF 1

digital EQUIPMENT CORPORATION MAYNARD MASSACHUSETTS

TITLE MAJOR STATES TIMING & FLOW

SIZE D CODE TD NUMBER RK8-E-2 REV.
DIST.

REVISIONS: REV. | CHANGE NO. | CHK

BRUNING 40-522 15840
DEC FORM NO DRD 102-B

This drawing and specifications, herein, are the property of Digital Equipment Corporation and shall not be reproduced or copied or used in whole or in part as the basis for the manufacture or sale of items without written permission.

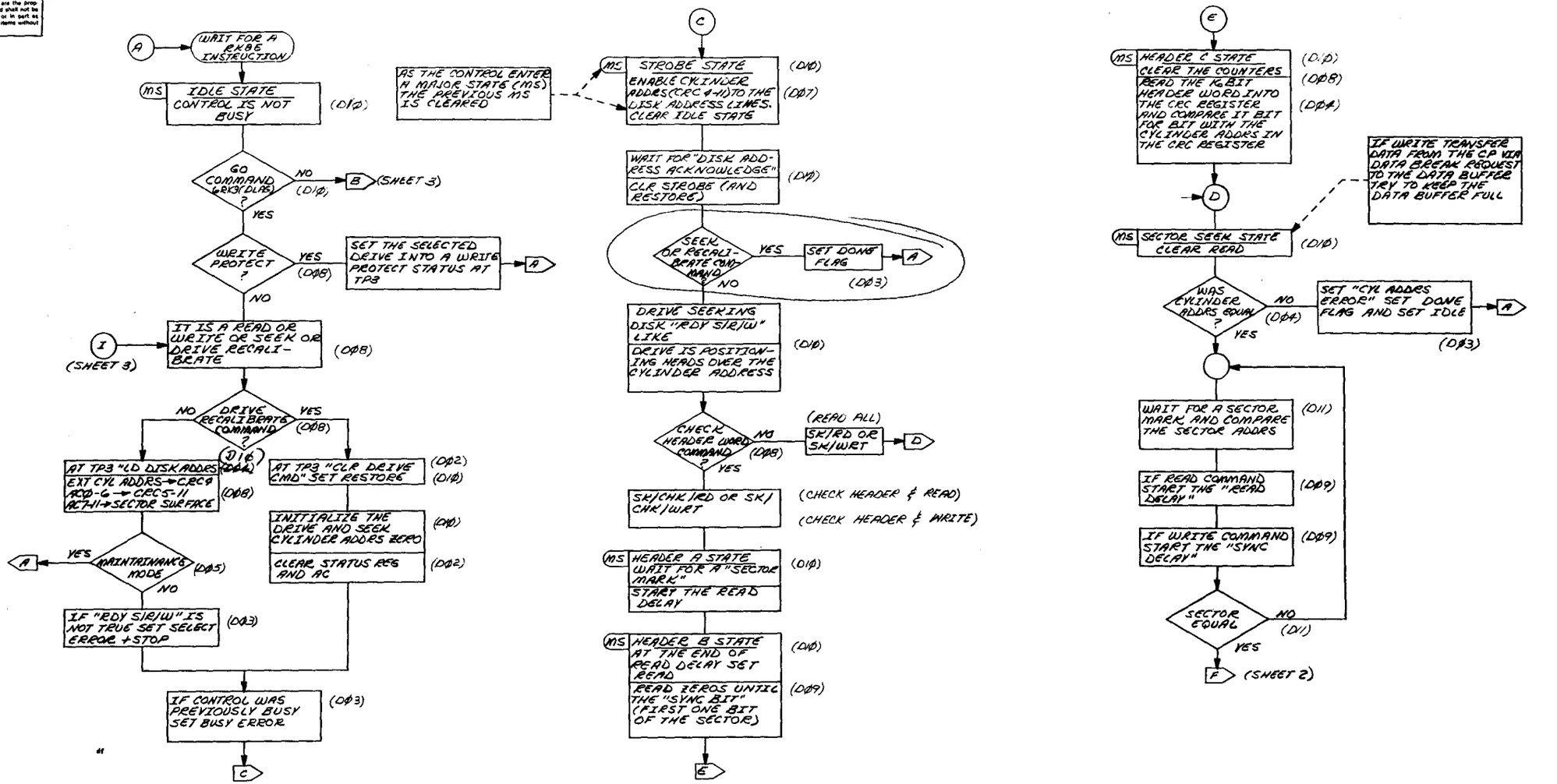

FIRST USED ON OPTION/MODEL	QTY.	DESCRIPTION	PART NO.	ITEM NO.
RK8-E		PARTS LIST		

UNLESS OTHERWISE SPECIFIED DIMENSION IN INCHES. TOLERANCES

DECIMALS	ANGLES
.XXX = .005 .XX = .02 .X = .1	±0° 30'

REMOVE BURRS AND BREAK SHARP CORNERS SURFACE QUALITY ✓

MATERIAL —/—

FINISH —/—

DRN.		DATE 7/09/72
CHKD.		DATE
ENG.		DATE
PROJ. ENG.		DATE
PROD.		DATE

NEXT HIGHER ASSY. FD-RK8-E

SCALE —/—

SHEET 1 OF 4

digital EQUIPMENT CORPORATION MAYNARD MASSACHUSETTS

TITLE FLOW DIAGRAM (RK8-E)

SIZE	CODE	NUMBER	REV.
D	FD	RK8-E-1	

DIST.

REVISIONS			
CHANGE NO.			REV

BRUNING 40-522 15MO

DEC FORM NO DRD 102-B

This drawing and specifications, herein, are the property of Digital Equipment Corporation and shall not be reproduced or copied or used in whole or in part as the basis for the manufacture or sale of items without written permission.

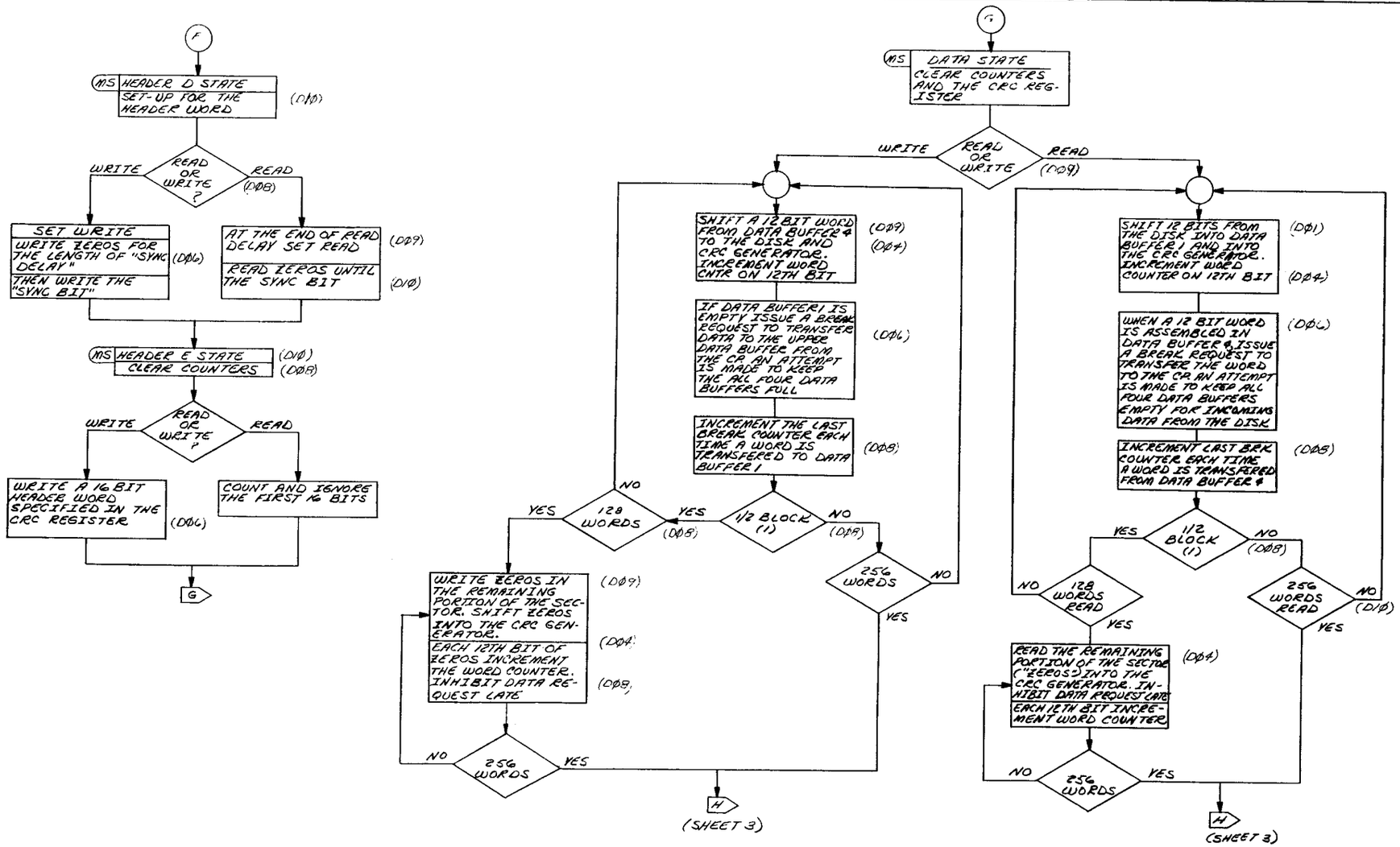

FIRST USED ON OPTION/MODEL	QTY.	DESCRIPTION	PART NO.	ITEM NO.
RK8-L		PARTS LIST		

UNLESS OTHERWISE SPECIFIED DIMENSION IN INCHES. TOLERANCES

DECIMALS	ANGLES
.XXX ± .005 .XX ± .02 .X ± .1	±0° 30'

REMOVE BURRS AND BREAK SHARP CORNERS SURFACE QUALITY ✓

MATERIAL —

FINISH —

DRN. — DATE
CHK'D. — DATE
ENG. — DATE
PROJ. ENG. — DATE
PROD. — DATE

NEXT HIGHER ASSY. E-11-RK8-K

SCALE —

SHEET 2 OF 4

digital EQUIPMENT CORPORATION MAYNARD, MASSACHUSETTS

TITLE FLOW DIAGRAM (RK8-E)

SIZE D CODE FD NUMBER RK8-E-1 REV.

DIST.

REVISIONS		
CHG.	CHANGE NO	REV

BRLANKG 40-522 15640

DEC FORM NO GRD 102-B

This drawing and specifications, herein, are the property of Digital Equipment Corporation and shall not be reproduced or copied or used in whole or in part as the basis for the manufacture or sale of items without written permission

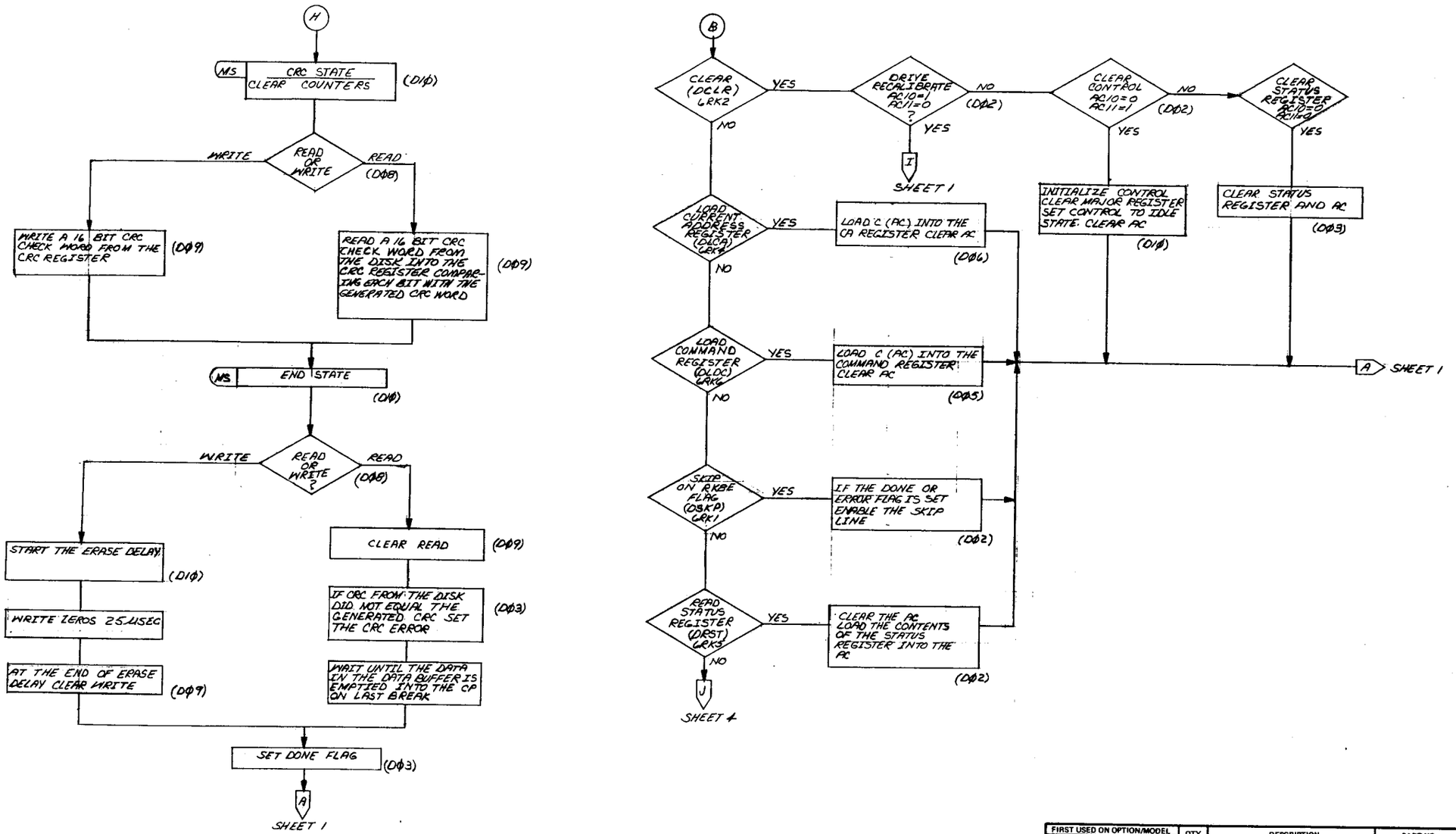

FIRST USED ON OPTION/MODEL	QTY.	DESCRIPTION	PART NO.	ITEM NO.
RK8-E		PARTS LIST		

UNLESS OTHERWISE SPECIFIED DIMENSION IN INCHES. TOLERANCES

DECIMALS	ANGLES
.XXX = .005 .XX = .02 .X = .1	±0° 30'

REMOVE BURRS AND BREAK SHARP CORNERS SURFACE QUALITY ✓

MATERIAL —/—

FINISH —/—

		DATE
DRN.	M. Rocco	6/22/72
CHK'D.	D. Hughes	10-9-72
ENG.	[illegible]	10/9/72
PROJ. ENG.	[illegible]	DATE
PROD.	Dick Kane	10/10/72

digital EQUIPMENT CORPORATION MAYNARD, MASSACHUSETTS

TITLE

FLOW DIAGRAM (RK8-E)

NEXT HIGHER ASSY. B-DD-RK8-Ø

SCALE —/—

SHEET 3 OF 4

SIZE	CODE	NUMBER	REV.
D	FD	RK8-E-1	

DIST.

REVISIONS			
CHK	CHANGE NO.	REV.	
DK 8/8/72		A01	

BRUNING 40-522 15M-0

DEC FORM NO DRD 102-B

SIZE D CODE FD NUMBER RK8-E-1 REV.

The drawing and specifications, herein, are the property of Digital Equipment Corporation and shall not be reproduced or copied or used in whole or in part as the basis for the manufacture or sale of items without written permission.

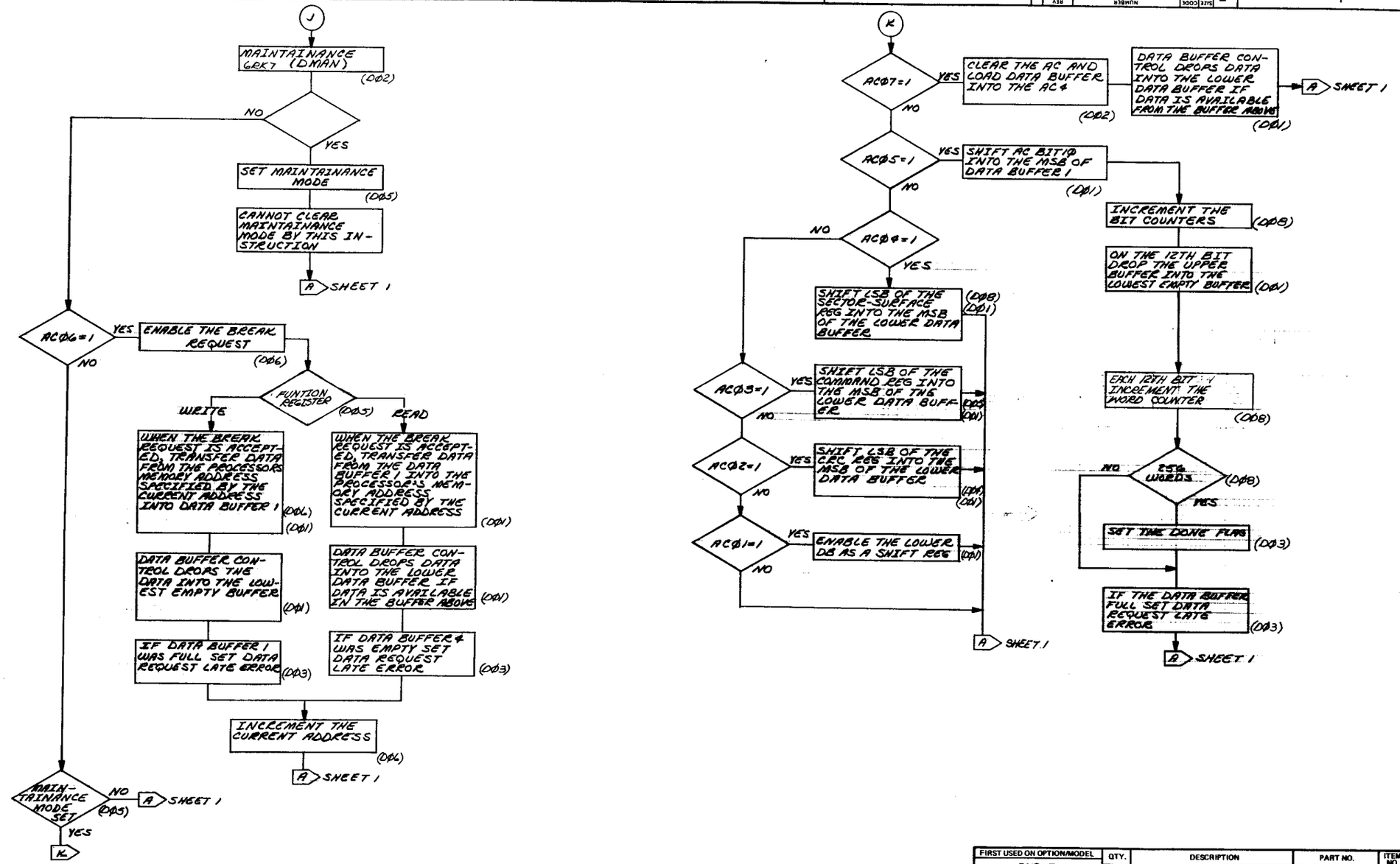

FIRST USED ON OPTION/MODEL	QTY.	DESCRIPTION	PART NO.	ITEM NO.
RK8-E		PARTS LIST		

UNLESS OTHERWISE SPECIFIED DIMENSION IN INCHES. TOLERANCES

DECIMALS	ANGLES
.XXX = .006 .XX = .02 .X = .1	±0° 30'

REMOVE BURRS AND BREAK SHARP CORNERS SURFACE QUALITY ✓

MATERIAL —

FINISH —

DRN.		DATE 7-17-72
CHKD.		DATE 10-9-72
ENG.		DATE 10/6/72
PROJ. ENG.		DATE 10/6/72
PROD.		DATE 10/6/72

NEXT HIGHER ASSY. B-DD-RK8-Ø

SCALE —

SHEET 4 OF 4

digital EQUIPMENT CORPORATION MAYNARD, MASSACHUSETTS

TITLE FLOW DIAGRAM (RK8-E)

SIZE	CODE	NUMBER	REV.
D	FD	RK8 - E-1	

DIST.

REVISIONS			
C.K.	CHANGE NO.		REV.
	CR 8/30/72		PA1

BRUNING 40-522 15840

DEC FORM NO DRD 102-B

PAGE REVISION CONTROL SHEET

SH NO.	PAGE REVISIONS	REMARKS
1	A	
2	A	
3	A	
4	A	
5	A	
6	A	
7	A	
ECO NO.		
ETCH REV.	B	
ENG.		
DATE		FIRST USED ON OPTION/MODEL: RK8-E

DRN.		DATE 10-9-72
CHK'D.		DATE 10/9/72
ENG.		DATE 10/9/72
PROJ. ENG.		DATE 10/9/72
PROD.		DATE 10/10/72

digital EQUIPMENT CORPORATION
MAYNARD, MASSACHUSETTS

TITLE
DATA BUFFER & STATUS

"THIS DRAWING AND SPECIFICATIONS, HEREIN, ARE THE PROPERTY OF DIGITAL EQUIPMENT CORPORATION AND SHALL NOT BE REPRODUCED OR COPIED OR USED IN WHOLE OR IN PART AS THE BASIS FOR THE MANUFACTURE OR SALE OF ITEMS WITHOUT WRITTEN PERMISSION.
COPYRIGHT © DIGITAL EQUIPMENT CORPORATION"

NEXT HIGHER ASSY.: B-DD-RK8-0

SCALE

SHEET 1 OF 7

SIZE	CODE	NUMBER	REV.
B	CS	M7104-0-1	A

DIST.

This drawing and specifications, herein, are the property of Digital Equipment Corporation and shall not be reproduced or copied or used in whole or in part as the basis for the manufacture or sale of items without written permission.

NOTES:

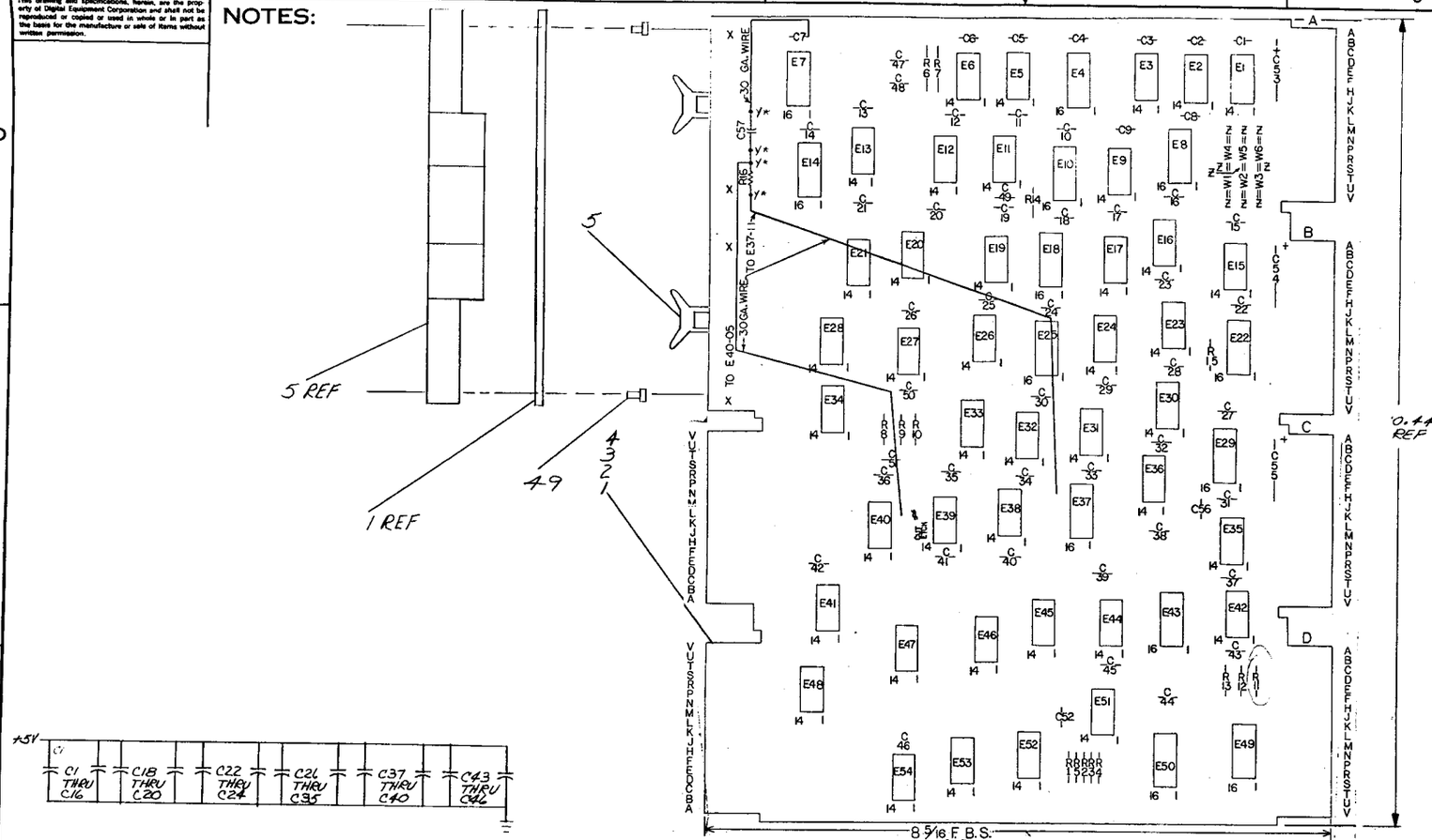

AC2, AF1, AN1, AT1, AF2, AN2, AT2, BC1, BF1, BN1, BT1, BC2, BF2, BN2, BT2, CC1, CF1, CN1, CT1, CC2, CF2, CN2, CT2, DC1, DF1, DN1, DT1, DC2, DF2, DN2, DT2.

		#30 AWG WIRE, SOLID, GREEN	9105740-55	52
* 4		GRIPLETS	7210244-0	51
1	C57	CAP., 1000 pf 5% DM	1000042	50
4		EYELET	9006750	49
9		SPLIT LUGS	9006735	48
4	E4, E10, E18, E25	I.C. DEC 74174	1910652	47
1	E7	I.C. DEC 74123	1910436	46
1	E50	I.C. DEC 7496	1910363	45
3	E11, E40, E48	I.C. DEC 7408	1910155	44
1	E33	I.C. DEC 7437	1910091	43
1	E43	I.C. DEC 74193	1910018	42
4	E8, E22, E29, E49	I.C. DEC 8235	1909935	41
1	E21	I.C. DEC 74H04	1909931	40
1	E36	I.C. DEC 8881	1909705	39
1	E1	I.C. DEC 314	190974	38
4	E14, E23, E27, E31	I.C. DEC 7404	1909686	37
1	E38	I.C. DEC 74H74	1909667	36
1	E37	I.C. DEC 8251B	1909594	35
1	E30	I.C. DEC 384	1909486	34
4	E2, E15, E35, E42	I.C. DEC 380	1909485	33
2	E6, E26	I.C. DEC 74H53	1909062	32
1	E20	I.C. DEC 74H00	1909056	31
6	E3, E5, E9, E17, E24, E32	I.C. DEC 7495	1909055	30
6	E13, E19, E28, E34, E51, E53	I.C. DEC 7402	1909004	29
1	E12	I.C. DEC 7473	1905587	28
1	E14	I.C. DEC 7476	1905585	27
2	E41, E44	I.C. DEC 7440	1905579	26
1	E47	I.C. DEC 7410	1905576	25
3	E45, E46, E54	I.C. DEC 7400	1905575	24
2	E39, E52	I.C. DEC 7474	1905547	23
2	R6, R7	RES., 5.11K, 1/8W, 1%, MF	1304854	22
2	R2, R3	RES., 180, 1/4W, 5%, C.C.	1301322	21
2	R12, R13	RES., 4.7K, 1/4W, 5% C.C.	1300447	20
1	R9	RES., 2.2K, 1/4W, 5% C.C.	1300417	19
1	R11	RES., 1.8K, 1/4W, 5%, C.C.	1300398	18
2	R1, R4	RES., 390, 1/4W, 5%, C.C.	1300309	17
6	R5, R8, R10, R14, R15, R16	RES., 100, 1/4W, 5%, C.C.	1300229	16
2		SPACER (CABLE CLAMP)	1202704	15
40	C1 THRU C16, C18 THRU C20, C22 THRU C24, C26 THRU C35, C37 THRU C40, C43 THRU C46	CAP., .01uf, 100V, 20%, DISC	1001610	14
3	C53 THRU C55	CAP., 6.8uf, 35V, 20%, TANT	1000067	13
2	C49, C56	CAP., 470pf, 100V, 5% DM	1000024	12
1	C51	CAP., 330pf, 100V, 5% DM	1000023	11
1	C52	CAP., 180pf, 100V, 5% DM	1000020	10
1	C50	CAP., 120pf, 100V, 5% DM	00018	9
1	C47	CAP., 39pf, 100V, 5% DM	1000010	8
1	C48	CAP., 10pf, 100V, 5% DM	1000006	7
6	C17, C21, C25, C36, C41, C42	CAP., .02uf, 100V, 20%, DISC	1000004	6
2		HANDLE, FLIP-CHIP, MAGENTA	9008337-06	5
1		ETCHED CIRCUIT BOARD	5010064	4
REF		MODULE ECO HISTORY	B-MH-M7104-0-6	3
REF		ASS'Y/DRILLING HOLE LAYOUT	D-AH-M7104-0-5	2
REF		X-Y COORDINATE HOLE LOCATION	X-CO-M7104-0-4	1
QTY	REF DESIGNATION	DESCRIPTION	PART NO.	ITEM NO.

PARTS LIST

DEC 74123	8	16
DEC 74174	8	16
DEC 7496	5	12
DEC 74193	8	16
DEC 8235	8	16
DEC 314	1	8
DEC 8251B	8	16
DEC 384	1	8
DEC 380	1	8
DEC 7473	4	11
DEC 7476	5	13
IC TYPE	GND	+ 5V

GND AND 5V ARE USUALLY PIN 7 AND 14 RESPECTIVELY EXCEPTIONS ARE STATED ABOVE

IC PIN LOCATIONS

FIRST USED ON OPTION MODEL: RK8-E

ETCH BOARD REV: B

ORIGINATED			
CHANGE NO.			
REVISIONS			
CHK			
	DEC NO.	EIA NO.	DEC NO.	EIA NO.

SEMICONDUCTOR CONVERSION CHART

DRN. Wilent DATE 7/8/72
CHK'D. R.C.A. DATE 10-6-72
ENG. DATE 10/6/72
PROJ. ENG. DATE 10/6/72
PROD. DATE 10/6/72

NEXT HIGHER ASSY: 8-DD-RK8-0

SCALE: NONE

SHEET 2 OF —

digital EQUIPMENT CORPORATION MAYNARD, MASSACHUSETTS

TITLE: DATA BUFFER & STATUS

SIZE D | CODE CS | NUMBER M7104-0-1 | REV. A

DIST.

REV A | NUMBER M7104-0-1 | SIZE D | CODE CS

DEC FORM NO. DRD 135A

BRUNING 40-522 16699

The drawing and specifications, herein, are the property of Digital Equipment Corporation and shall not be reproduced or copied or used in whole or in part as the basis for the manufacture or sale of items without written permission.

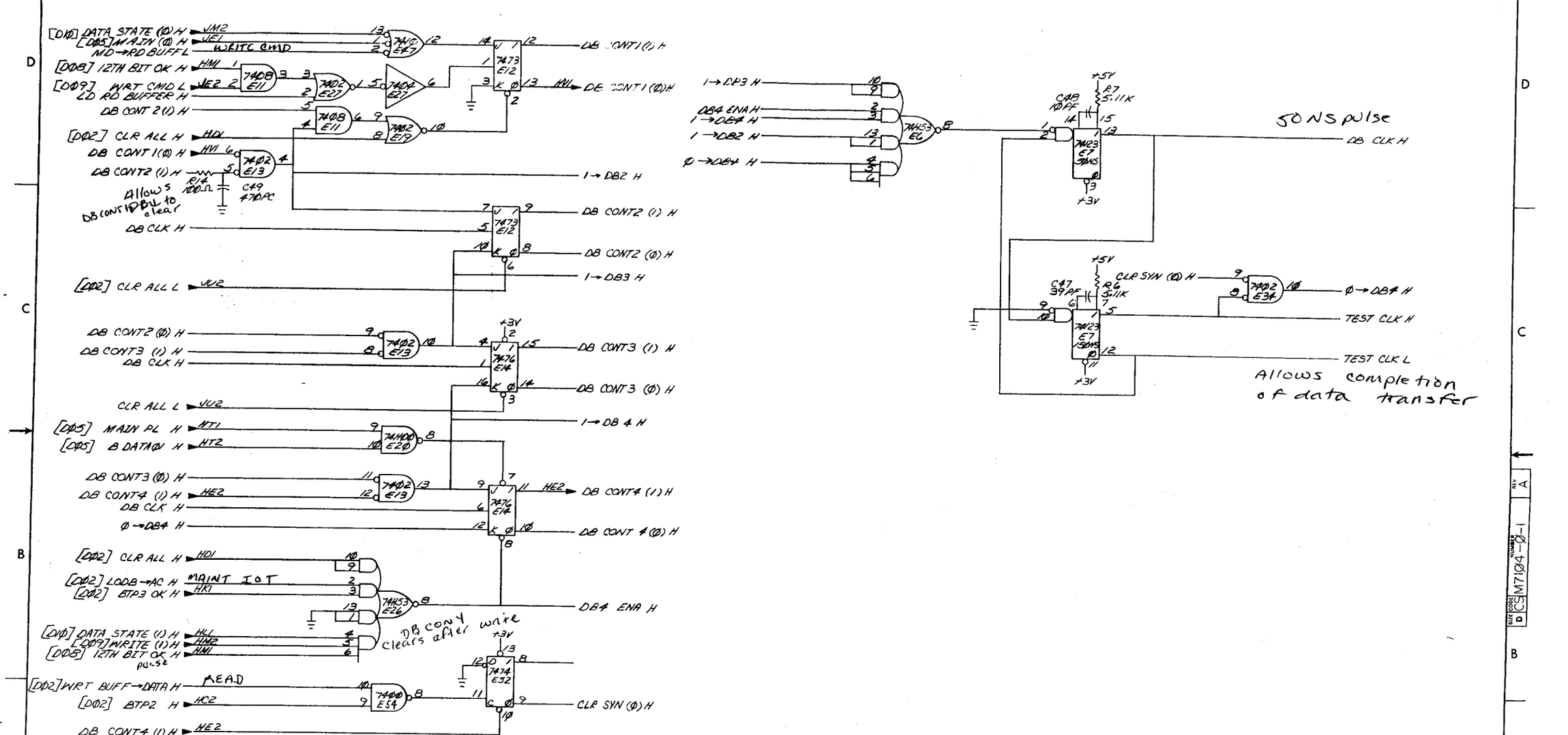

(DATA BUFFER CONTROL)

FIRST USED ON OPTION/MODEL	QTY.	DESCRIPTION	PART NO.	ITEM NO.
RK8-E		PARTS LIST		

UNLESS OTHERWISE SPECIFIED DIMENSION IN INCHES. TOLERANCES

DECIMALS	ANGLES
.XXX = .005 .XX = .02 .X = .1	±0° 30'

REMOVE BURRS AND BREAK SHARP CORNERS SURFACE QUALITY ✓

MATERIAL —

FINISH —

		DATE
DRN.	M. Rose	9/1/72
CHK'D	Cook	10-7-72
ENG.		10/10/72
PROJ. ENG.		10/10/72
PROD.		

digital EQUIPMENT CORPORATION MAYNARD MASSACHUSETTS

TITLE (DØIA) DATA BUF & STATUS

NEXT HIGHER ASSY. B-DD-RK8-Ø

SCALE —

SHEET 3 OF —

SIZE	CODE	NUMBER	REV.
D	CS	M7104-Ø-1	A

DIST.

REV	REVISIONS	CHANGE NO	CHK

BRUNING 40-522 15M40

DEC FORM NO DRD 102-B

This drawing and specifications, herein, are the property of Digital Equipment Corporation and shall not be reproduced or copied or used in whole or in part as the basis for the manufacture or sale of items without written permission.

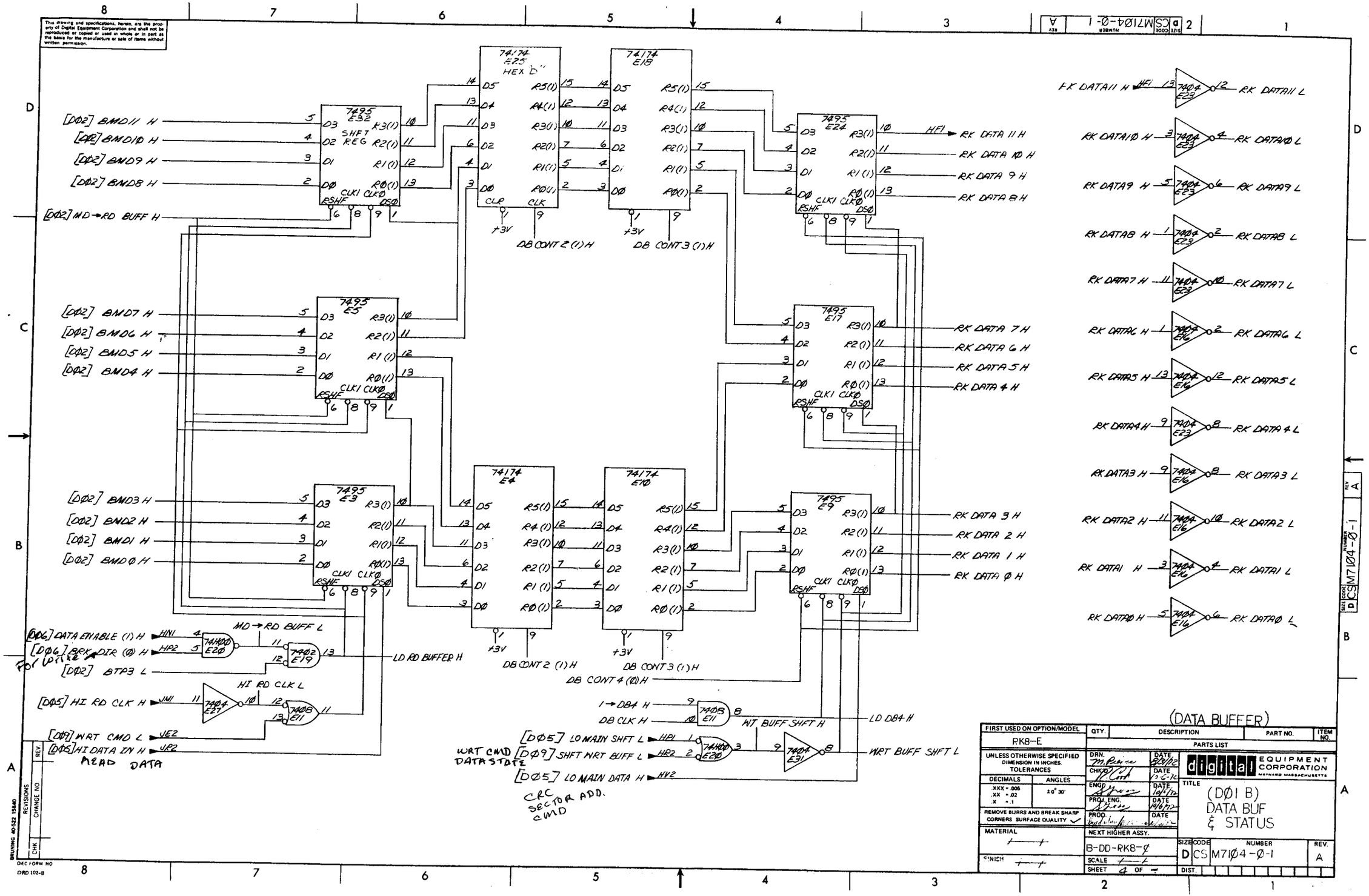

This drawing and specifications, herein, are the property of Digital Equipment Corporation and shall not be reproduced or copied or used in whole or in part as the basis for the manufacture or sale of items without written permission.

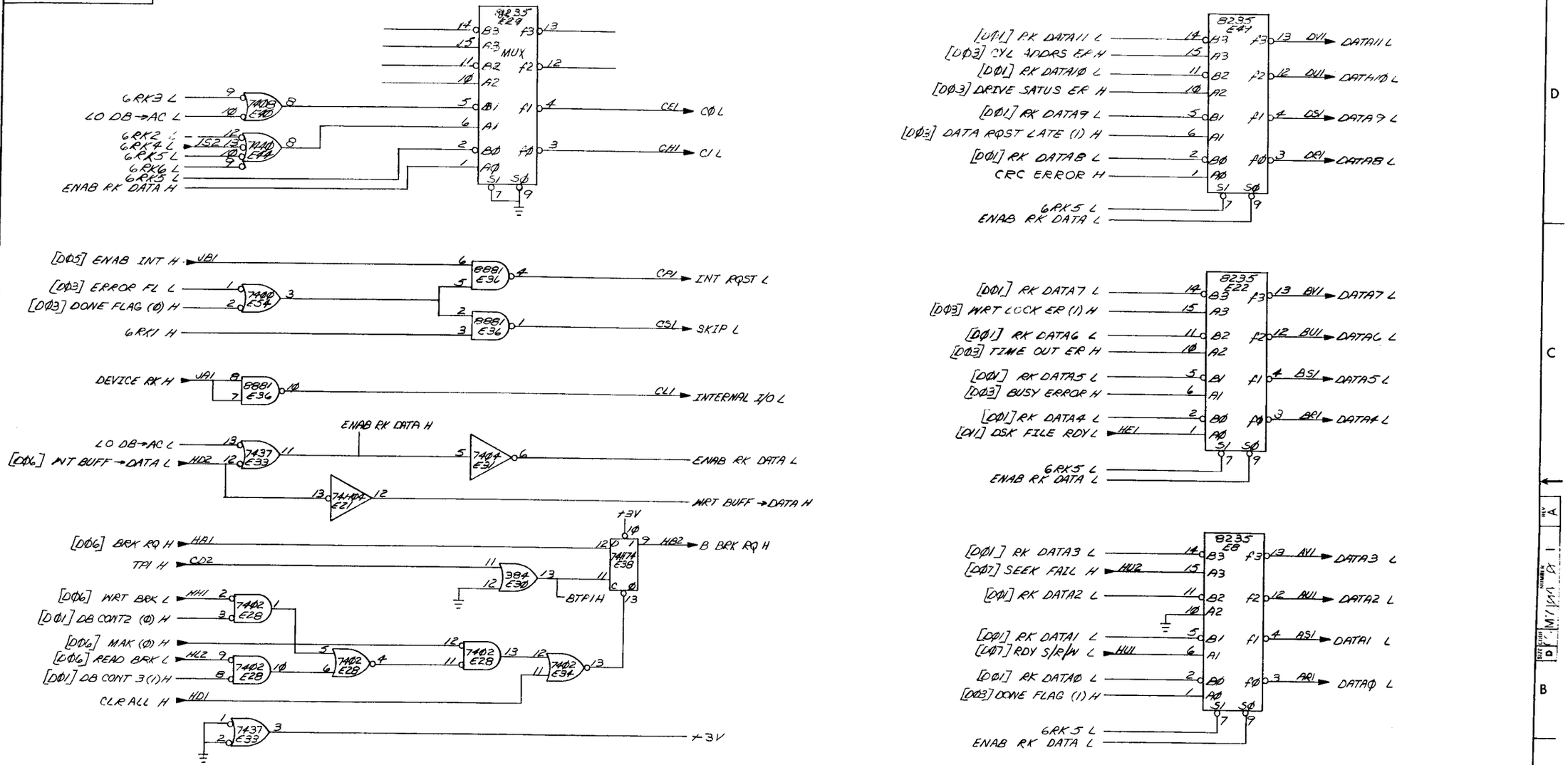

(OMNIBUS DRIVERS)

FIRST USED ON OPTION/MODEL	QTY.	DESCRIPTION	PART NO.	ITEM NO.
RK8-E		PARTS LIST		

UNLESS OTHERWISE SPECIFIED DIMENSION IN INCHES. TOLERANCES

DECIMALS	ANGLES
.XXX ± .005 .XX ± .02 .X ± .1	±0° 30'

REMOVE BURRS AND BREAK SHARP CORNERS SURFACE QUALITY ✓

MATERIAL —/—/—

FINISH —/—/—

		DATE
DRN.	M. Klein Mike	
CHK'D	R. Cash	10/6/72
ENG.		10/6/72
PROJ. ENG.		10/6/72
PROD.		10/6/72

NEXT HIGHER ASSY. B-DD-RK8-Ø

SCALE —/—/—

SHEET 5 OF —

digital EQUIPMENT CORPORATION MAYNARD MASSACHUSETTS

TITLE (DØ2A) DATA BUF & STATUS

SIZE	CODE	NUMBER	REV.
D	CS	M71Ø4-Ø-1	A

DIST.

REV	REVISIONS	CHANGE NO	CHK

BRUNING 40-522 15M40

DEC FORM NO DRD 102-B

This drawing and specifications, herein, are the property of Digital Equipment Corporation and shall not be reproduced or copied or used in whole or in part as the basis for the manufacture or sale of items without written permission.

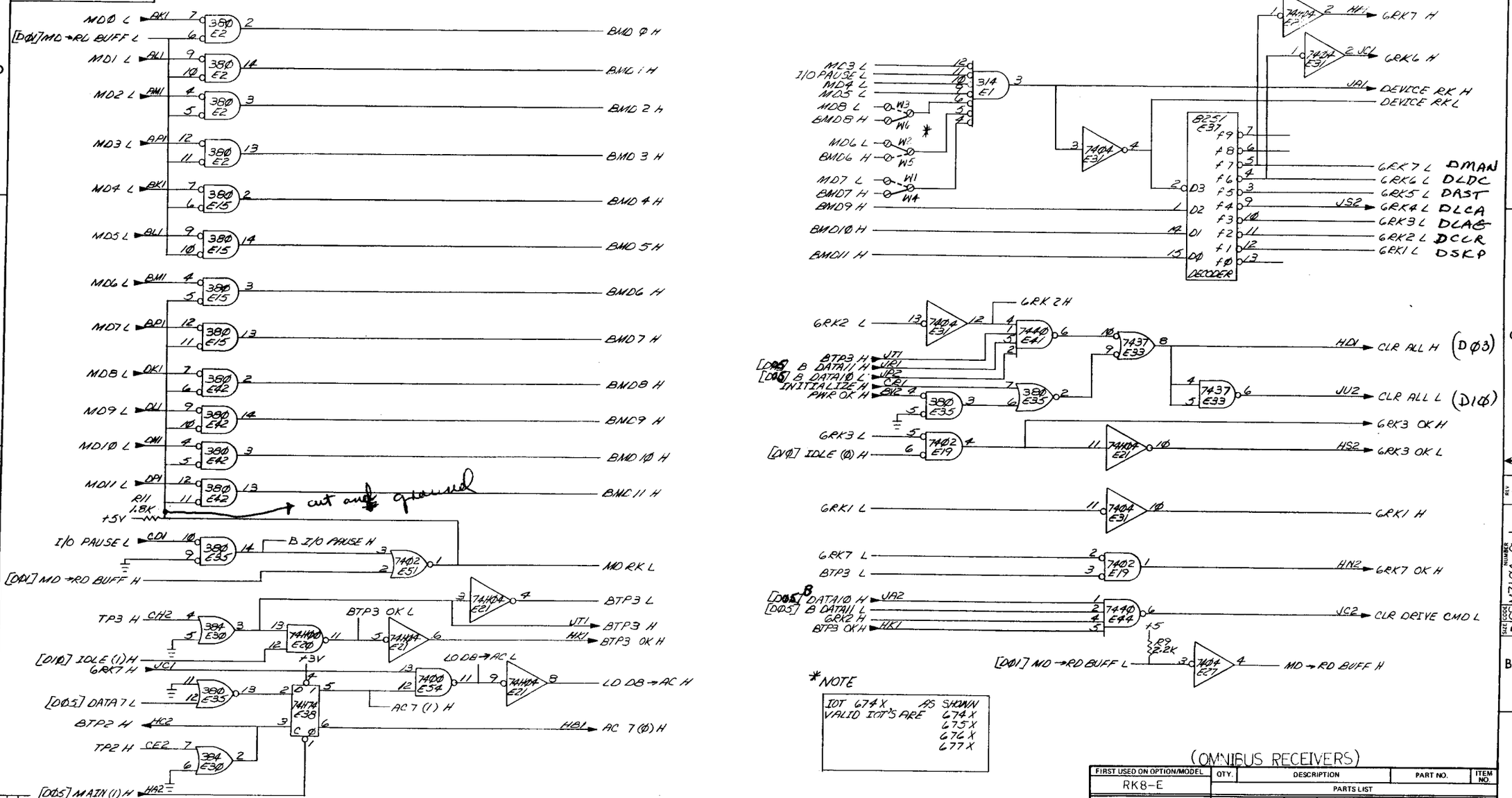

*NOTE

IOT 674X	AS SHOWN
VALID IOT'S ARE	674X
	675X
	676X
	677X

(OMNIBUS RECEIVERS)

FIRST USED ON OPTION/MODEL	QTY.	DESCRIPTION	PART NO.	ITEM NO.
RK8-E		PARTS LIST		

UNLESS OTHERWISE SPECIFIED DIMENSION IN INCHES. TOLERANCES

DECIMALS	ANGLES
.XXX = .005	±0° 30'
.XX = .02	
.X = .1	

REMOVE BURRS AND BREAK SHARP CORNERS SURFACE QUALITY ✓

MATERIAL —

FINISH —

		DATE
DRN.	[illegible]	5/5/72
CHK'D	[illegible]	5/6/72
ENG.	[illegible]	10/6/72
PROJ. ENG.	[illegible]	10/6/72
PROD.	[illegible]	10/6/72

digital EQUIPMENT CORPORATION MAYNARD MASSACHUSETTS

TITLE (D02 B) DATA BUF & STATUS

NEXT HIGHER ASSY. B-DD-RK8-0

SCALE —

SHEET 6 OF —

SIZE	CODE	NUMBER	REV.
D	CS	M7104-0-1	A

DIST

REVISIONS: REV. | CHANGE NO. | CHK

BRUNING 40-522 15840

DEC FORM NO DRD 102-B

This drawing and specifications, herein, are the property of Digital Equipment Corporation and shall not be reproduced or copied or used in whole or in part as the basis for the manufacture or sale of items without written permission.

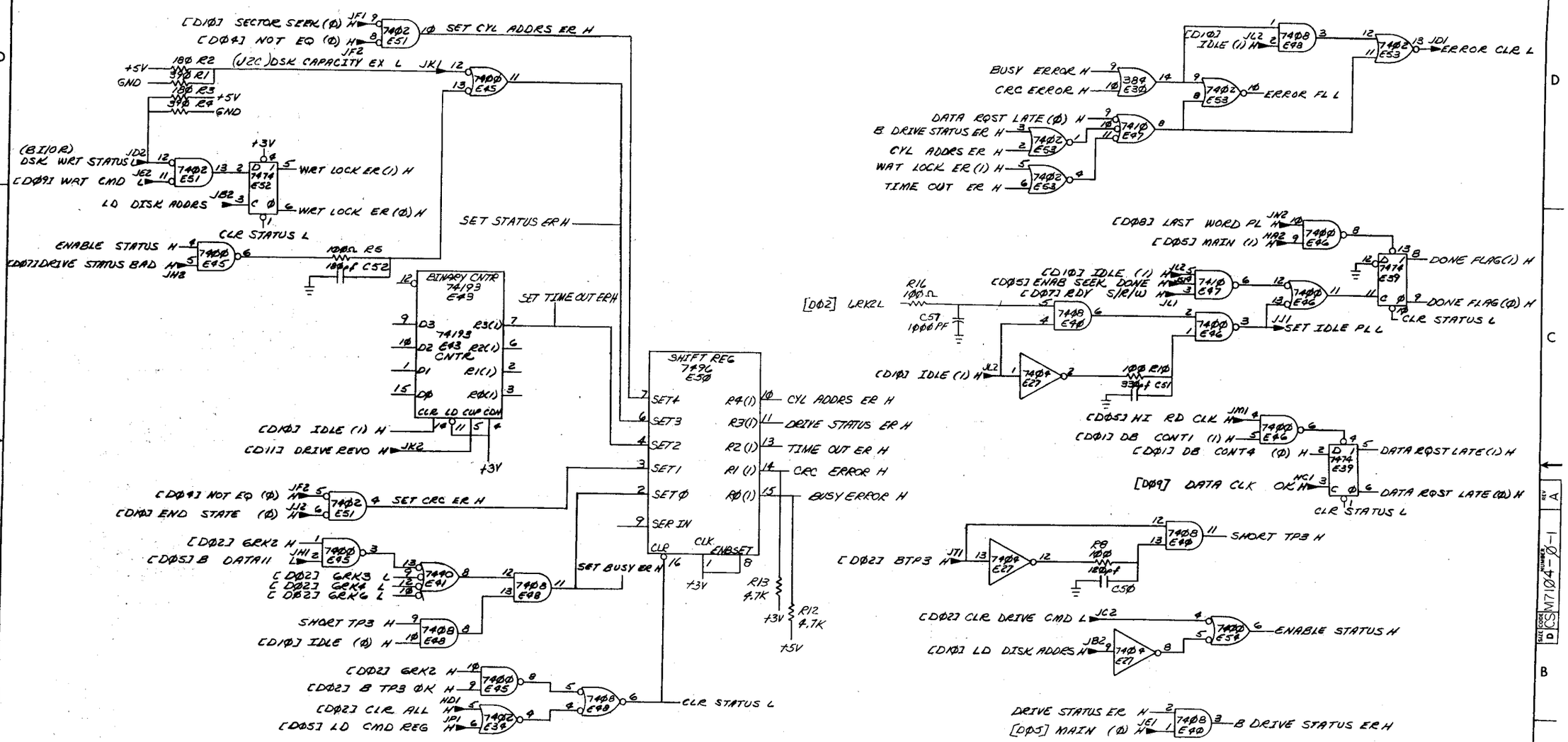

(STATUS REGISTER ERROR DETECT)

FIRST USED ON OPTION/MODEL	QTY.	DESCRIPTION	PART NO.	ITEM NO.
RK8-E		PARTS LIST		

UNLESS OTHERWISE SPECIFIED DIMENSION IN INCHES TOLERANCES

DECIMALS	ANGLES
.XXX ± .005 .XX ± .02 .X ± .1	±0° 30'

REMOVE BURRS AND BREAK SHARP CORNERS SURFACE QUALITY ✓

MATERIAL —/—

FINISH —/—

		DATE
DRN.	akibert	7-11-72
CHK'D	R. Clark	7/14/72
ENG.		7/14/72
PROJ. ENG.		7/14/72
PROD.		DATE

NEXT HIGHER ASSY. B-DD-RK8-0

SCALE —/—

SHEET 7 OF —

digital EQUIPMENT CORPORATION MAYNARD MASSACHUSETTS

TITLE (D03) DATA BUF & STATUS

SIZE	CODE	NUMBER	REV.
D	CS	M7104-0-1	A

DIST.

REV	CHANGE NO	CHK	
P0			
P1		OK	7-7-72

DEC FORM NO DRD 102-B

PAGE REVISION CONTROL SHEET

SH NO.	PAGE REVISIONS	REMARKS
1	A	
2	A	
3	A	
4	A	
5	A	
6	A	

ECO NO.	
ETCH REV.	B
ENG.	
DATE	

FIRST USED ON OPTION/MODEL

RK8E

DRN.		DATE 10-9-72
CHK'D		DATE 10-9-72
ENG.		DATE 10/9/72
PROJ. ENG.		DATE 10/9/72
PROD.	Dick Rose	DATE 10/9/72

digital EQUIPMENT CORPORATION
MAYNARD, MASSACHUSETTS

TITLE

MAJOR REGISTERS

"THIS DRAWING AND SPECIFICATIONS, HEREIN, ARE THE PROPERTY OF DIGITAL EQUIPMENT CORPORATION AND SHALL NOT BE REPRODUCED OR COPIED OR USED IN WHOLE OR IN PART AS THE BASIS FOR THE MANUFACTURE OR SALE OF ITEMS WITHOUT WRITTEN PERMISSION.
COPYRIGHT © DIGITAL EQUIPMENT CORPORATION"

NEXT HIGHER ASSY.

B-DD-RK8-Ø

SCALE —/—

SHEET 1 OF 6

SIZE	CODE	NUMBER	REV.
B	CS	M7105-Ø-1	A

DIST.

This drawing and specifications, herein, are the property of Digital Equipment Corporation and shall not be reproduced or copied or used in whole or in part as the basis for the manufacture or sale of items without written permission.

NOTES:

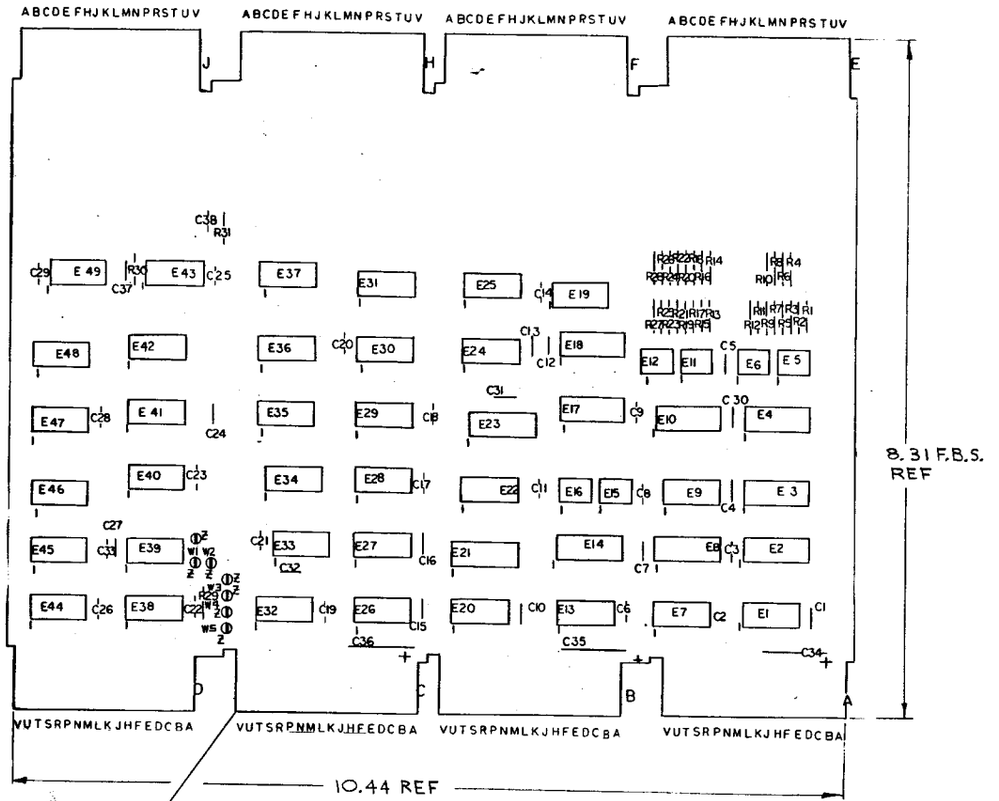

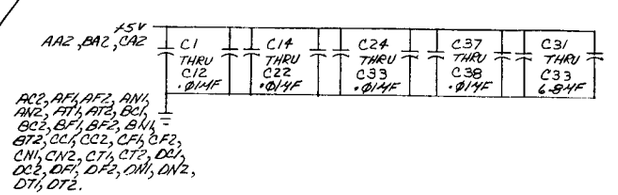

DEC 74155	8	16
DEC 74174	8	16
DEC 74161	8	16
DEC 75452	4	8
DEC 75451	4	8
DEC 8271	8	16
DEC 384	1	8
DEC 380	1	8
IC TYPE	GND	+ 5V

GND AND 5V ARE USUALLY PIN 7 AND 14 RESPECTIVELY EXCEPTIONS ARE STATED ABOVE

IC PIN LOCATIONS

QTY	REF DESIGNATION	DESCRIPTION	PART NO.	ITEM NO.
7		SPLIT LUG	9006735	34
1	E46	I.C. DEC 7440	1905579	33
1	E10	I.C. DEC 74155	1910656	32
1	E23	I.C. DEC 74174	1910652	31
3	E8, E18, E21	I.C. DEC 74161	1910650	30
4	E5, E6, E15, E16	I.C. DEC 75452	1910645	29
2	E11, E12	I.C. DEC 75451	1910406	28
2	E9, E14	I.C. DEC 7496	1910363	27
3	E25, E30, E41	I.C. DEC 7408	1910155	26
1	E24	I.C. DEC 7486	1910011	25
6	E1, E7, E20, E26, E38, E44	I.C. DEC 8881	1909705	24
2	E39, E45	I.C. DEC 74H74	1909667	23
3	E2, E3, E17	I.C. DEC 8271	1909615	22
2	E42, E43	I.C. DEC 7404	1909686	21
1	E27	I.C. DEC 384	1909486	20
3	E13, E22, E32	I.C. DEC 380	1909485	19
1	E38	I.C. DEC 74H11	1909267	18
1	E9	I.C. DEC 74H52	1909061	17
1	E37	I.C. DEC 74H10	1909057	16
2	E28, E47	I.C. DEC 7402	1909004	15
6	E19, E29, E31, E36, E40, E49	I.C. DEC 7400	1905575	14
3	E34, E35, E48	I.C. DEC 7474	1905547	13
14	R2, R5, R6, R9, R10, R12, R15, R16, R19, R20, R23, R24, R27, R28	RESISTOR 100, 1/4W, 5%	1301322	12
1	R29	RESISTOR, 1K, 1/4W, 5%	1300365	11
14	R1, R3, R4, R7, R8, R11, R13, R14, R17, R18, R21, R22, R25, R26	RESISTOR, 390, 1/4W, 5%	1300309	10
2	R30, R31	RESISTOR, 100, 1/4W, 5%	1300229	9
32	C1 THRU C33	CAP, .01μF, 100V, 20% DISC	1001610	8
3	C34 THRU C36	CAP, 6.8μF, 35V, 20% S.TANT	1000067	7
1	C38	CAP, 560pf, 100V, 5% D.M.	1000025	6
1	C37	CAP, 470pf, 100V, 5%, D.M.	1000024	5
1		ETCHED CIRCUIT BOARD	5010065	4
REF		MODULE ECO HISTORY	B-MH-M7105-0-6	3
REF		ASS'Y DRILLING HOLE LAYOUT	D-MH-M7105-0-5	2
REF		X-Y COORDINATE HOLE LOCATION	X-CO-M7105-0-4	1

PARTS LIST

FIRST USED ON OPTION MODEL

ETCH BOARD REV

CHK	REV	CHANGE NO.	DEC NO.	EIA NO.	DEC NO.	EIA NO.

REVISIONS

SEMICONDUCTOR CONVERSION CHART

DRN. 6/3/70 CHK'D. ENG. PROJ. ENG. PROD. NEXT HIGHER ASSY SCALE NONE SHEET 2 OF

digital EQUIPMENT CORPORATION MAYNARD, MASSACHUSETTS

TITLE MAJOR REGISTERS

SIZE D CODE CS NUMBER M7105-0-1 REV. A DIST.

REV A NUMBER M7105-0-1 SIZE D CODE CS

BRUNING 40-522 16699

DEC FORM NO. DRD 135A

This drawing and specifications, herein, are the property of Digital Equipment Corporation and shall not be reproduced or copied or used in whole or in part as the basis for the manufacture or sale of items without written permission.

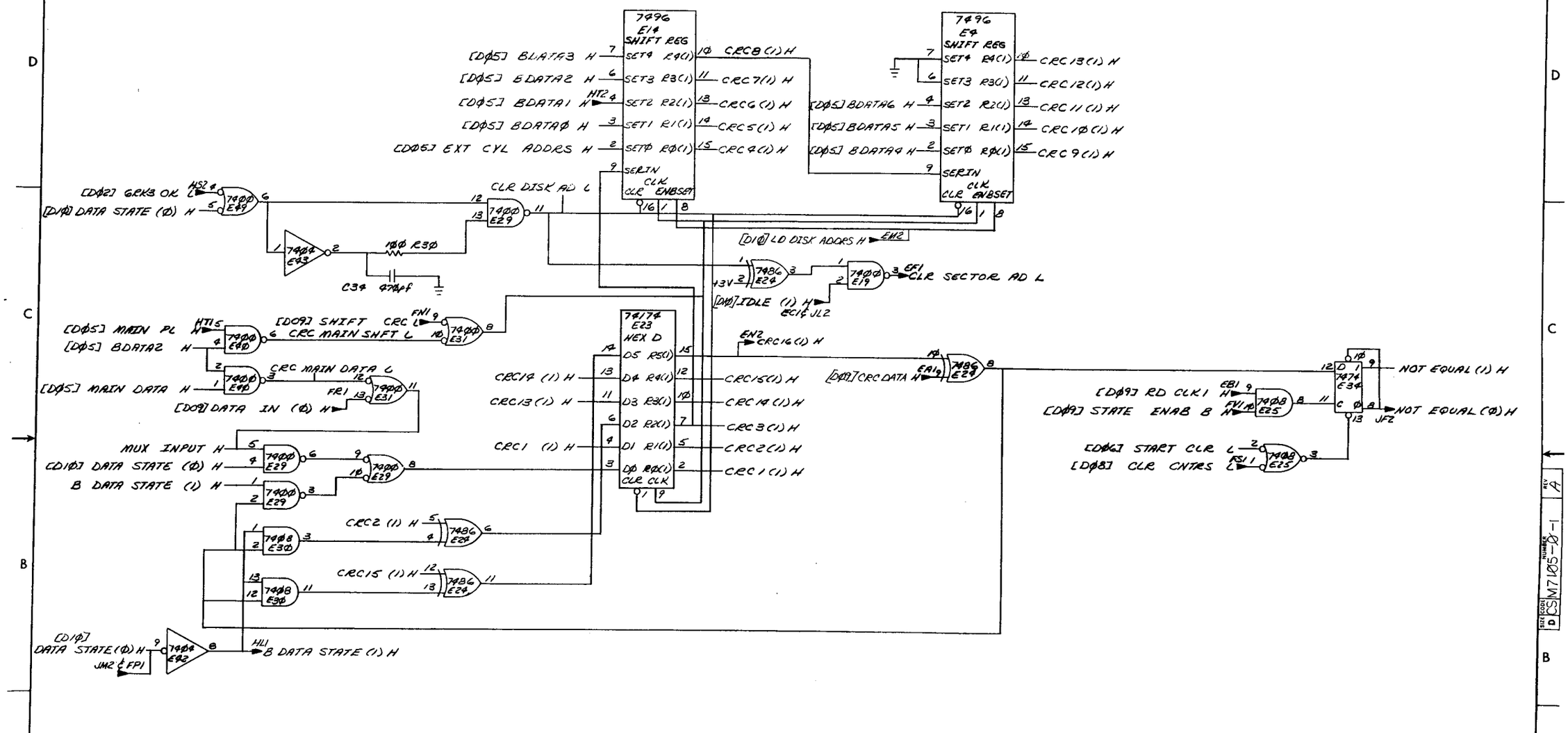

(CRC/DISK ADDRESS REG)

FIRST USED ON OPTION/MODEL	QTY.	DESCRIPTION	PART NO.	ITEM NO.
RK8-E		PARTS LIST		

UNLESS OTHERWISE SPECIFIED DIMENSION IN INCHES. TOLERANCES

DECIMALS	ANGLES
.XXX ± .005	±0° 30'
.XX ± .02	
.X ± .1	

REMOVE BURRS AND BREAK SHARP CORNERS SURFACE QUALITY ✓

MATERIAL —/—

FINISH —/—

DRN.		DATE 6/13/72
CHK'D.		DATE
ENG.		DATE 10/7/72
PROJ. ENG.		DATE 10/7/72
PROD.		DATE 10/9/72

digital EQUIPMENT CORPORATION MAYNARD MASSACHUSETTS

TITLE (DØ4) MAJOR REGISTERS

DØ4

NEXT HIGHER ASSY. D-UA-RK8-E-Ø

SCALE —/—

SHEET 3 OF

SIZE	CODE	NUMBER	REV.
D	CS	M7Ø5-Ø-1	A

DIST.

REVISIONS		
CHANGE NO		REV
CHK		A

DEC FORM NO DRD 102-B

BRUNING 40-522 15840

This drawing and specifications, herein, are the property of Digital Equipment Corporation and shall not be reproduced or copied or used in whole or in part as the basis for the manufacture or sale of items without written permission.

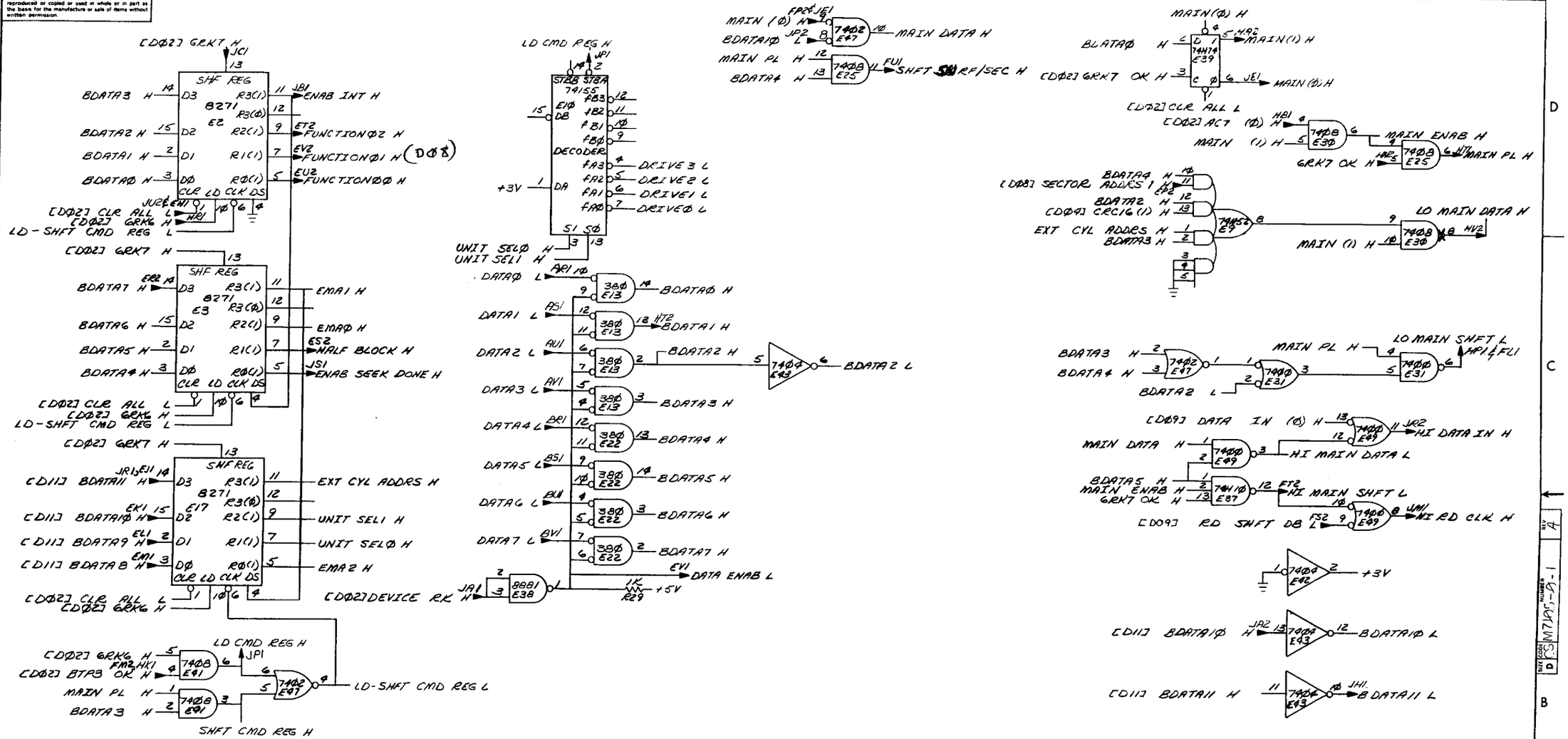

(COMMAND REG. MAINT. LOGIC)

FIRST USED ON OPTION/MODEL	QTY.	DESCRIPTION	PART NO.	ITEM NO.
RK8-E		PARTS LIST		

UNLESS OTHERWISE SPECIFIED DIMENSION IN INCHES. TOLERANCES

DECIMALS	ANGLES
.XXX = .005 .XX = .02 .X = .1	±0° 30'

REMOVE BURRS AND BREAK SHARP CORNERS SURFACE QUALITY ✓

MATERIAL —

FINISH —

		DATE
DRN.	Wilbert	6-13-72
CHK'D.		
ENG.		10/72
PROJ. ENG.		10/72
PROD.		

digital EQUIPMENT CORPORATION MAYNARD MASSACHUSETTS

TITLE (D05) MAJOR REGISTER

NEXT HIGHER ASSY. B-DD-RK8-0

SCALE —

SHEET 4 OF 6

SIZE	CODE	NUMBER	REV.
D	CS	M7105-0-1	A

DIST.

REV	CHANGE NO.	CHK
A		

BRUNING 40-522 15840

DEC FORM NO DRD 102-B

This drawing and specifications, herein, are the property of Digital Equipment Corporation and shall not be reproduced or copied or used in whole or in part as the basis for the manufacture or sale of items without written permission.

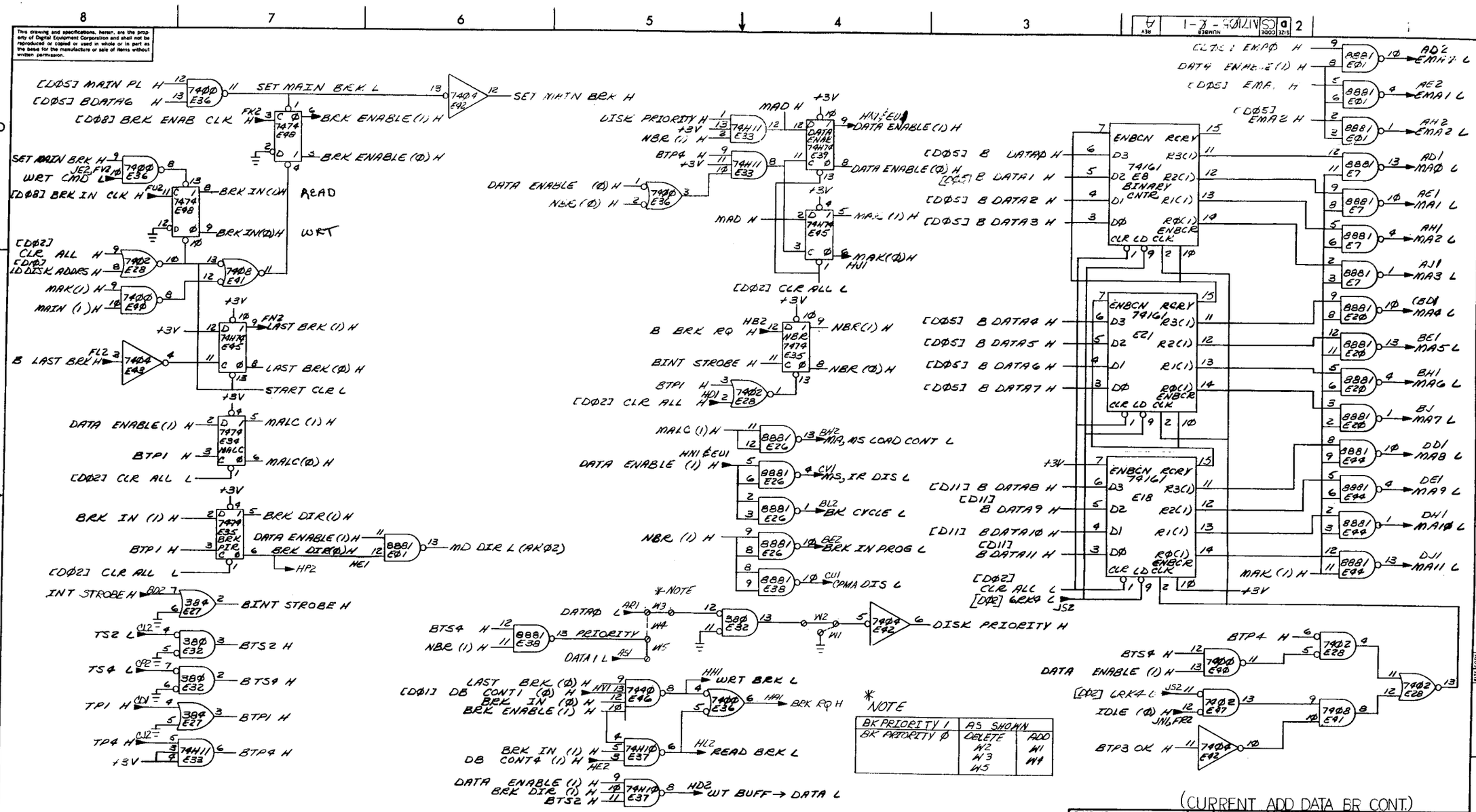

(CURRENT ADD DATA BR CONT.)

BK PRIORITY 1	AS SHOWN	
BK PRIORITY Ø	DELETE	ADD
	W2	W1
	W3	W4
	W5	

FIRST USED ON OPTION/MODEL	QTY.	DESCRIPTION	PART NO.	ITEM NO.
RK8-E		PARTS LIST		

UNLESS OTHERWISE SPECIFIED DIMENSION IN INCHES. TOLERANCES

DECIMALS	ANGLES
.XXX ± .005	±0° 30'
.XX ± .02	
.X ± .1	

REMOVE BURRS AND BREAK SHARP CORNERS SURFACE QUALITY ✓

MATERIAL —

FINISH —

DRN. Wilbert DATE 6-19-70
CHK'D DATE
ENG. DATE 1-14-70
PROJ. ENG. DATE
PROD. DATE

digital EQUIPMENT CORPORATION MAYNARD MASSACHUSETTS

TITLE (DØ6) MAJOR REGISTERS

NEXT HIGHER ASSY. B-DD-RK8-Ø

SCALE —

SHEET 5 OF

SIZE D CODE CS NUMBER M7105-Ø-1 REV. A

DIST.

REVISIONS

REV	CHANGE NO.	C.K.
A		

DRAWING 40-522 1984D

DEC FORM NO DRD 102-B

This drawing and specifications, herein, are the property of Digital Equipment Corporation and shall not be reproduced or copied or used in whole or in part as the basis for the manufacture or sale of items without written permission.

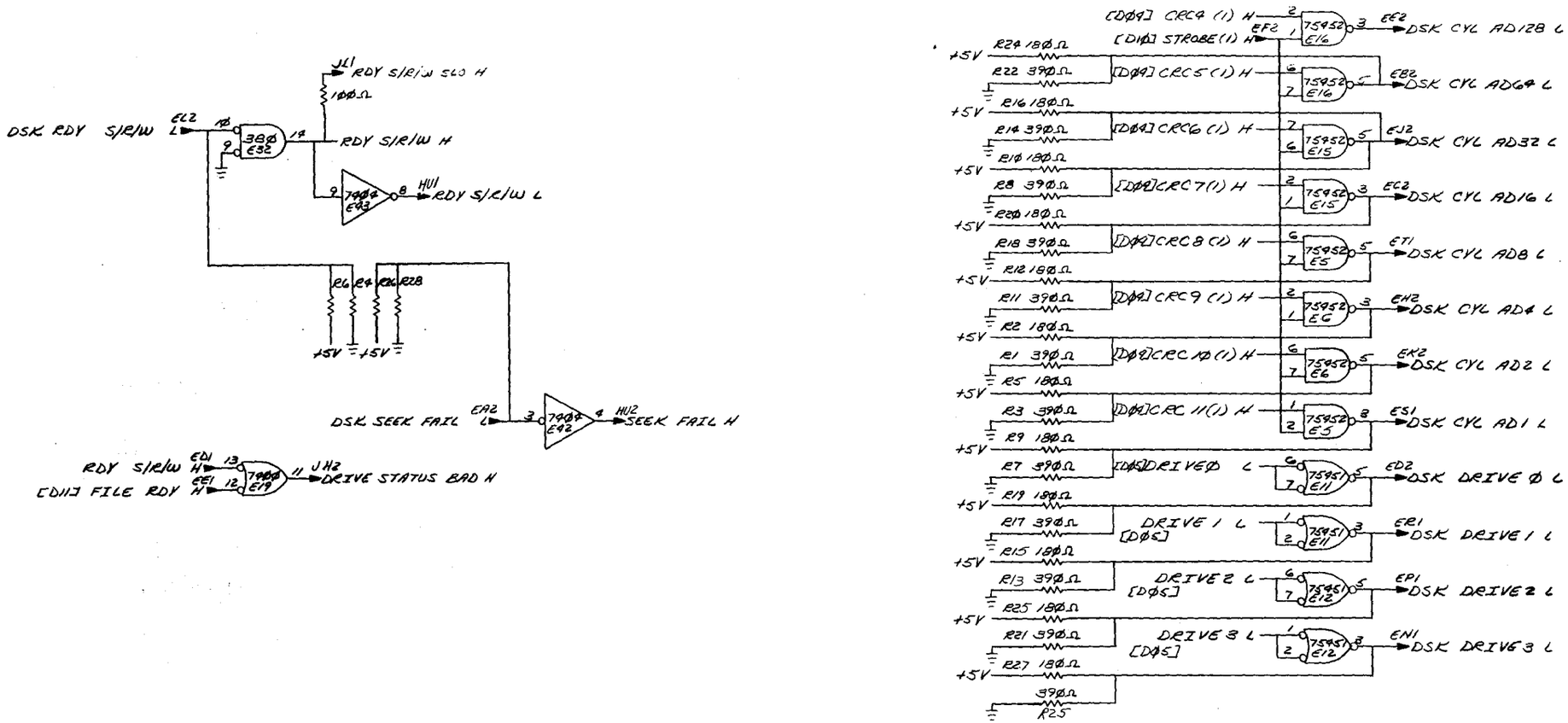

(DRIVE SIGNALS CABLE J1)

FIRST USED ON OPTION/MODEL	QTY.	DESCRIPTION	PART NO.	ITEM NO.
RK8-E		PARTS LIST		

UNLESS OTHERWISE SPECIFIED DIMENSION IN INCHES. TOLERANCES

DECIMALS	ANGLES
.XXX = .005	±0° 30'
.XX = .02	
.X = .1	

REMOVE BURRS AND BREAK SHARP CORNERS SURFACE QUALITY ✓

MATERIAL —

FINISH —

DRN.		DATE 6-14-72
CHK'D.		DATE
ENG.		DATE
PROJ. ENG.		DATE
PROD.		DATE

NEXT HIGHER ASSY. B-DD-RK8-Ø

SCALE —

SHEET 6 OF

digital EQUIPMENT CORPORATION MAYNARD MASSACHUSETTS

TITLE (DØ7) MAJOR REGISTERS

SIZE	CODE	NUMBER	REV.
D	CS	M7105-Ø-1	A

DIST.

REVISIONS			
CHANGE NO.			REV
			P01
CK 5-1-72			

BRUNING AD-522 1968

DEC FORM NO TYRD 102-B

PAGE REVISION CONTROL SHEET

SH NO.	PAGE REVISIONS	REMARKS
1	A	
2	A	
3	A	
4	A	
5	A	
6	A	
ECO NO.		
ETCH REV.	B	
ENG.		
DATE		

FIRST USED ON OPTION/MODEL: RK8E

DRN.	A. Ferguson	DATE 10-9-72
CHK'D	R. Cook	DATE 10-9-72
ENG.	[illegible]	DATE 10/9/72
PROJ. ENG.	[illegible]	DATE 10/9/72
PROD.	Dick Rose	DATE 10/9/72

digital EQUIPMENT CORPORATION
MAYNARD, MASSACHUSETTS

TITLE: CONTROL, RK8-E

NEXT HIGHER ASSY.: B-DD-RK8-Ø

SCALE: —

SHEET 1 OF 6

SIZE	CODE	NUMBER	REV.
B	CS	M71Ø6-Ø-1	A

DIST.

"THIS DRAWING AND SPECIFICATIONS, HEREIN, ARE THE PROPERTY OF DIGITAL EQUIPMENT CORPORATION AND SHALL NOT BE REPRODUCED OR COPIED OR USED IN WHOLE OR IN PART AS THE BASIS FOR THE MANUFACTURE OR SALE OF ITEMS WITHOUT WRITTEN PERMISSION.
COPYRIGHT © DIGITAL EQUIPMENT CORPORATION"

This drawing and specifications, herein, are the property of Digital Equipment Corporation and shall not be reproduced or copied or used in whole or in part as the basis for the manufacture or sale of items without written permission.

NOTES:

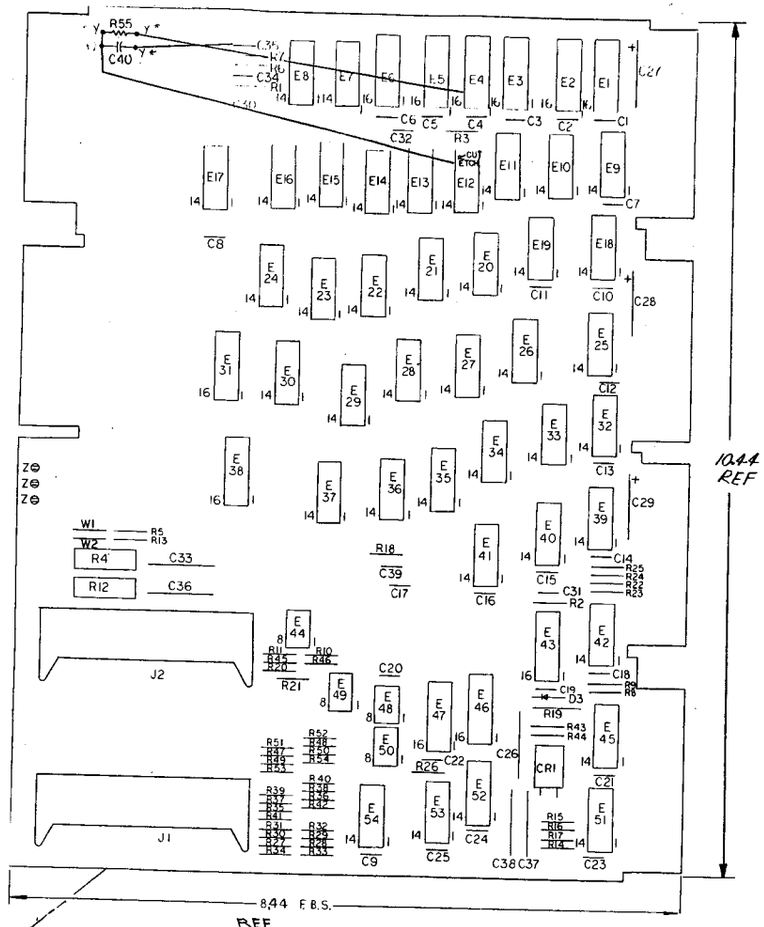

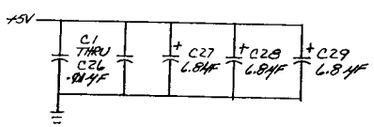

1	C40	CAPACITOR 470 PF, 100V, 5%	1000024	48
AR		#30 AWG WIRE, SOLID GREEN	9105740-55	47
* 4		GRIPLETS	1210244-0	46
AR	W1, W2	INSULATED JUMPER	9009185	45
2	J1, J2	CONN. 40 RT ANGLE	1209941	44
1	E31	I.C. TYPE 74155	1910656	43
2	E38, E43	I.C. TYPE 74123	1910436	42
1	E46	I.C. TYPE 7496	1910363	41
1	E47	I.C. TYPE 7485	1910224	40
9	E15, E18 THRU E22, E24, E37, E41	I.C. TYPE 7474	1905547	39
1	E28	I.C. TYPE 74H52	1909061	38
1	E10	I.C. TYPE 74H10	1909057	37
2	E33, E39	I.C. TYPE 7410	1905576	36
2	E16, E32	I.C. TYPE 7408	1910155	35
5	E12, E51 THRU E54	I.C. TYPE 3800	1909485	34
2	E11, E7	I.C. TYPE 74H04	1909931	33
3	E9, E35, E36	I.C. TYPE 7404	1909686	32
6	E13, E23, E26, E29, C30, E40	I.C. TYPE 7402	1909004	31
8	E8, E12, E14, E17, E25, E27, E33, E45	I.C. TYPE 7400	1905575	30
6	E1 THRU E6	I.C. TYPE 74161	1910650	29
4	E44, E48 THRU E50	I.C. TYPE 75452	1910645	28
1	CR1	CRYSTAL, 2.88 MHZ	1810694-3	27
2	R4, R12	POTENTIOMETER, 10K, 10%, 3/4W, 76AR	1309143-10	26
1	R19	RESISTOR, 243K, 1%, 1/8W, MF	1309418	25
6	R1, R3, R6, R7, R18, R55	RESISTOR, 100Ω, 5%, 1/4W, CC	1300229	24
1	R13	RESISTOR, 20K, 5%, 1/4W, CC	1302391	23
3	R5, R15, R17	RESISTOR, 10K, 5%, 1/4W, CC	1300479	22
1	R2	RESISTOR, 56K, 5%, 1/4W, CC	1301874	21
1	R44	RESISTOR, 3K, 5%, 1/4W, CC	1300432	20
4	R8, R9, R26, R43	RESISTOR, 1K, 5%, 1/4W, CC	1300365	19
2	R16, R16	RESISTOR, 470Ω, 5%, 1/4W, CC	1300316	18
17	R11, R20, R23, R25, R27, R30, R31, R34, R35, R37, R38, R39, R41, R45, R47, R49, R51, R53	RESISTOR, 390Ω, 5%, 1/4W, CC	1300309	17
17	R10, R21, R22, R24, R28, R29, R32, R33, R36, R38, R40, R42, R46, R48, R50, R52, R54	RESISTOR, 180Ω, 5%, 1/4W, CC	1301322	16
1	D3	DIODE D664	1100114	15
2	C33, C36	CAPACITOR, .022μF, 100V, 10%, MYLAR	1002323	14
3	C37, C38, C26	CAPACITOR, 470PF, 100V, 1%, MYLAR	1009312	13
1	C31	CAPACITOR, 10pf, 100V, 5%, DM	1000006	12
1	C32	CAPACITOR, 820pf, 100V, 5%, DM	1000027	11
2	C34, C39	CAPACITOR, 560pf, 100V, 5%, DM	1000025	10
1	C35	CAPACITOR, 330pf, 100V, 5%, DM	1000023	9
1	C30	CAPACITOR, 180pf, 100V, 5%, DM	1000020	8
3	C27 THRU C29	CAPACITOR, 6.8μF, 35V, 20%, TANT	1000067	7
25	C1 THRU C25	CAPACITOR, .01μF, 100V, 20%, DISC	1001610	6
3	TP1 THRU TP3	SPLIT LUG	9006735	5
1		ETCHED CIRCUIT BOARD	5010066	4
REF		MODULE ECO HISTORY	B-MH-M7106-0-6	3
REF		ASS'Y DRILLING HOLE LAYOUT	D-AH-M7106-0-5	2
REF		X-Y COORDINATE HOLE LOCATION	X-CO-M7106-0-4	1
QTY	REF DESIGNATION	DESCRIPTION	PART NO.	ITEM NO.

PARTS LIST

DEC 380	1	8
DEC 7485	8	16
DEC 7496	5	12
DEC 74155	8	16
DEC 74161	8	16
IC TYPE	GND	+ 5V

GND AND 5V ARE USUALLY PIN 7 AND 14 RESPECTIVELY EXCEPTIONS ARE STATED ABOVE

IC PIN LOCATIONS

FIRST USED ON OPTION MODEL	
RK8 - E	

ETCH BOARD REV B

CHK	CHANGE NO.	REV.

REVISIONS

DEC NO.	EIA NO.	DEC NO.	EIA NO.
		D664	IN3606

SEMICONDUCTOR CONVERSION CHART

DRN.		DATE 8/3/72
CHK'D.		DATE
ENG.		DATE
PROJ. ENG.		DATE
PROD.		DATE

NEXT HIGHER ASSY D-UA-RK8-E-0

SCALE NONE

SHEET 2 OF

digital EQUIPMENT CORPORATION MAYNARD, MASSACHUSETTS

TITLE CONTROL, RK8-E

SIZE D CODE CS NUMBER M7106-0-1 REV. A

DIST.

DEC FORM NO. DRD-135A

BRUNING 40-522 16699

This drawing and specifications, herein, are the property of Digital Equipment Corporation and shall not be reproduced or copied or used in whole or in part as the basis for the manufacture or sale of items without written permission.

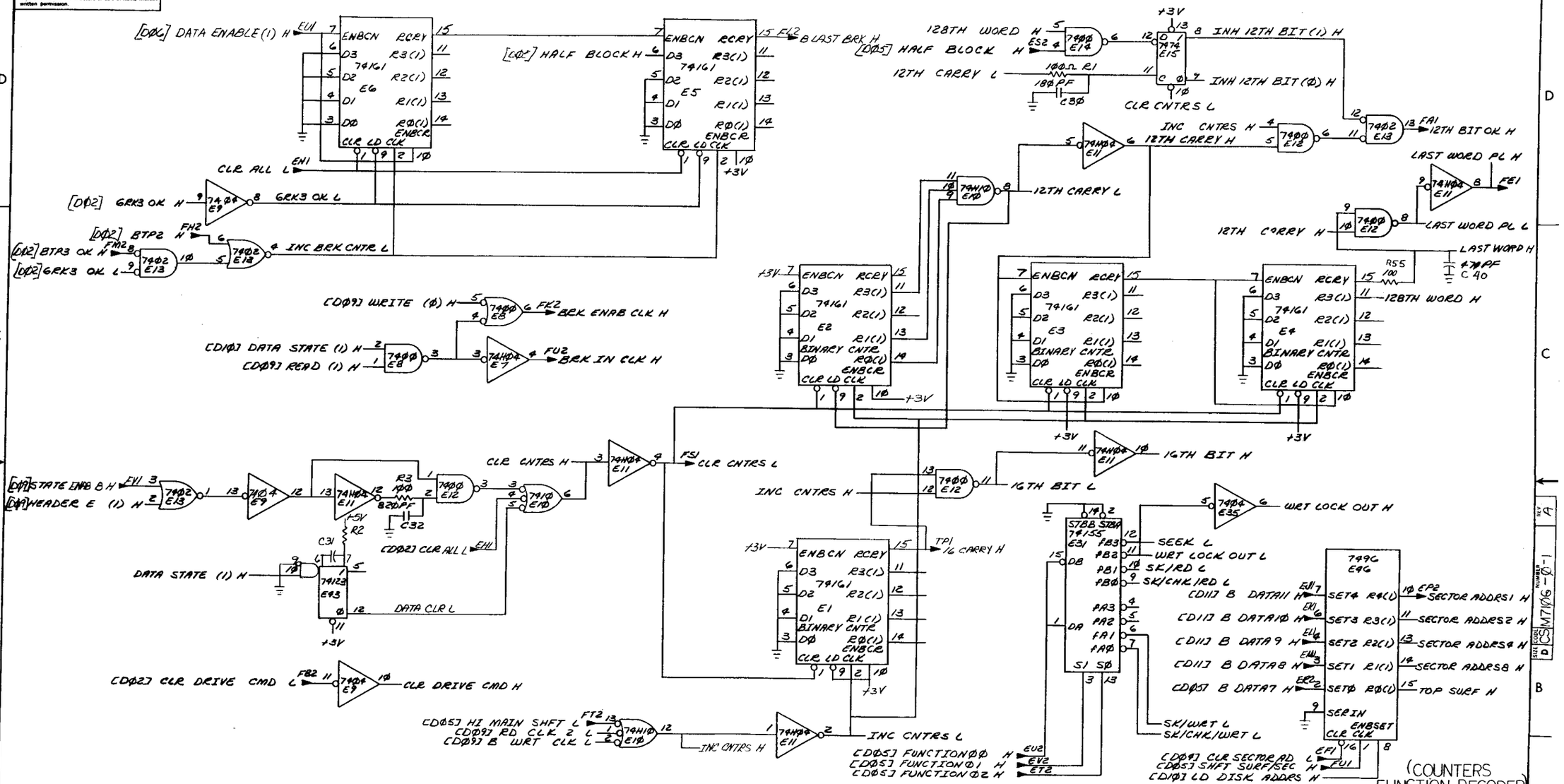

FIRST USED ON OPTION/MODEL	QTY.	DESCRIPTION	PART NO.	ITEM NO.
RK8-E		PARTS LIST		

UNLESS OTHERWISE SPECIFIED DIMENSION IN INCHES. TOLERANCES

DECIMALS	ANGLES
XXX = .005 XX = .02 .X = .1	±0° 30'

REMOVE BURRS AND BREAK SHARP CORNERS SURFACE QUALITY ✓

MATERIAL —

FINISH —

		DATE
DRN.	M. Pierce	9/1/72
CHK'D.		10-9-72
ENG.		10/9/72
PROJ. ENG.		10/9/72
PROD.		10/9/72

NEXT HIGHER ASSY. E-DI--RK8-Ø

SCALE —

SHEET 3 OF

digital EQUIPMENT CORPORATION MAYNARD MASSACHUSETTS

TITLE (DØ8) CONTROL, RK8-E

SIZE	CODE	NUMBER	REV.
D	CS	M7106-Ø-1	A

DIST.

REVISIONS		
CHK	CHANGE NO	REV
		A

BRUNING 40-522 15840

DEC FORM NO DRD 102-B

This drawing and specifications, herein, are the property of Digital Equipment Corporation and shall not be reproduced or copied or used in whole or in part as the base for the manufacture or sale of items without written permission.

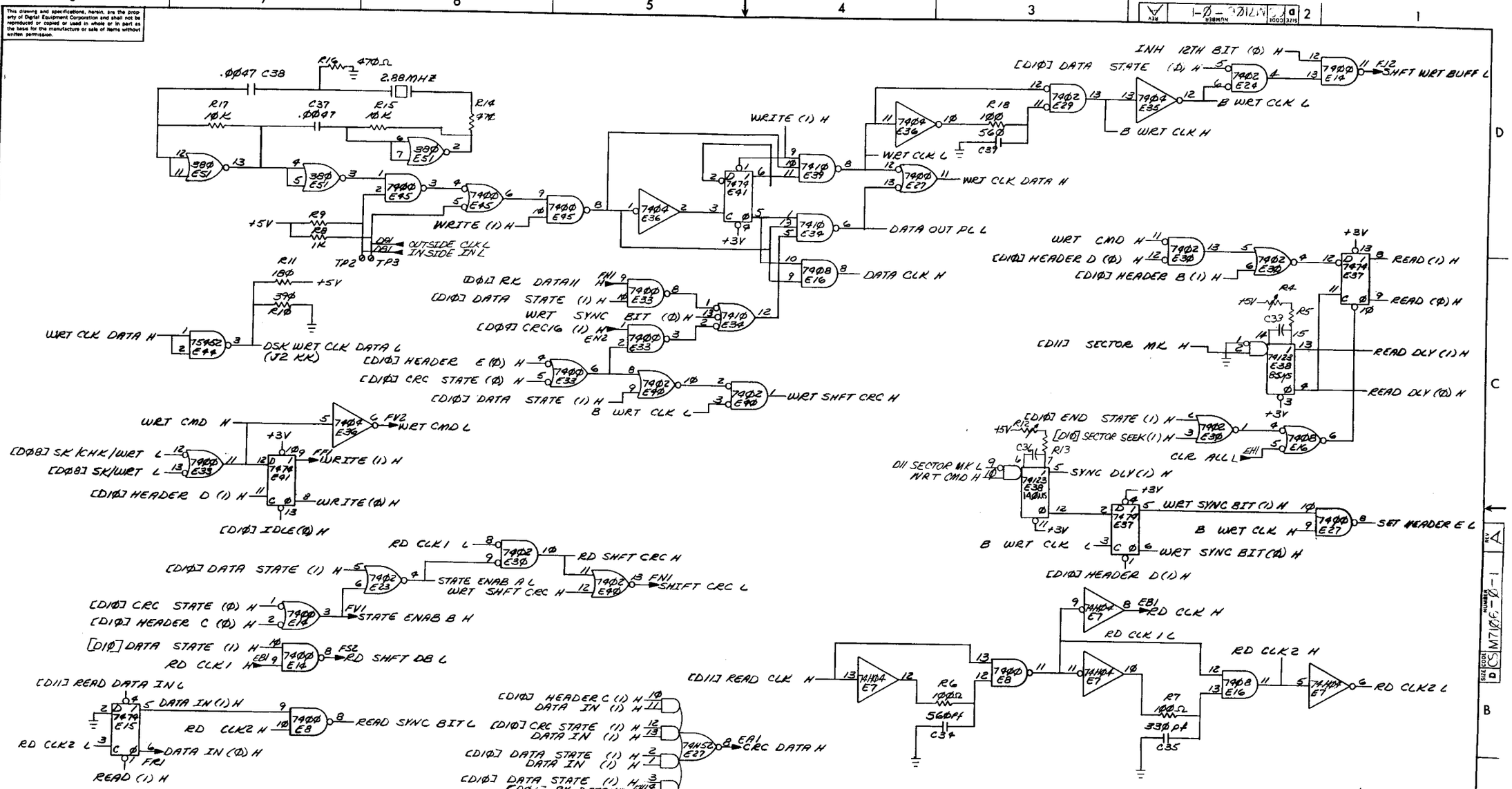

(READ/WRITE)

FIRST USED ON OPTION/MODEL	QTY.	DESCRIPTION	PART NO.	ITEM NO.
RK8-E		PARTS LIST		

UNLESS OTHERWISE SPECIFIED DIMENSION IN INCHES
TOLERANCES
DECIMALS .XXX = .005 .XX = .02 .X = .1
ANGLES ±0° 30'
REMOVE BURRS AND BREAK SHARP CORNERS SURFACE QUALITY ✓

MATERIAL
FINISH

DRN. DATE 7-12-72
CHK'D. DATE
ENG. DATE
PROJ. ENG. DATE
PROD. DATE

NEXT HIGHER ASSY. B-DI-RK8-Ø
SCALE
SHEET 4 OF

digital EQUIPMENT CORPORATION MAYNARD MASSACHUSETTS

TITLE (DØ9) CONTROL, RK8-E

SIZE	CODE	NUMBER	REV.
D	CS	M71ØE-Ø-1	A

DIST.

REVISIONS			
CHK	CHANGE NO		REV
			A

BRUNING 40-522 15840
DEC FORM NO ORD 102-B

This drawing and specifications, herein, are the property of Digital Equipment Corporation and shall not be reproduced or copied or used in whole or in part as the basis for the manufacture or sale of items without written permission.

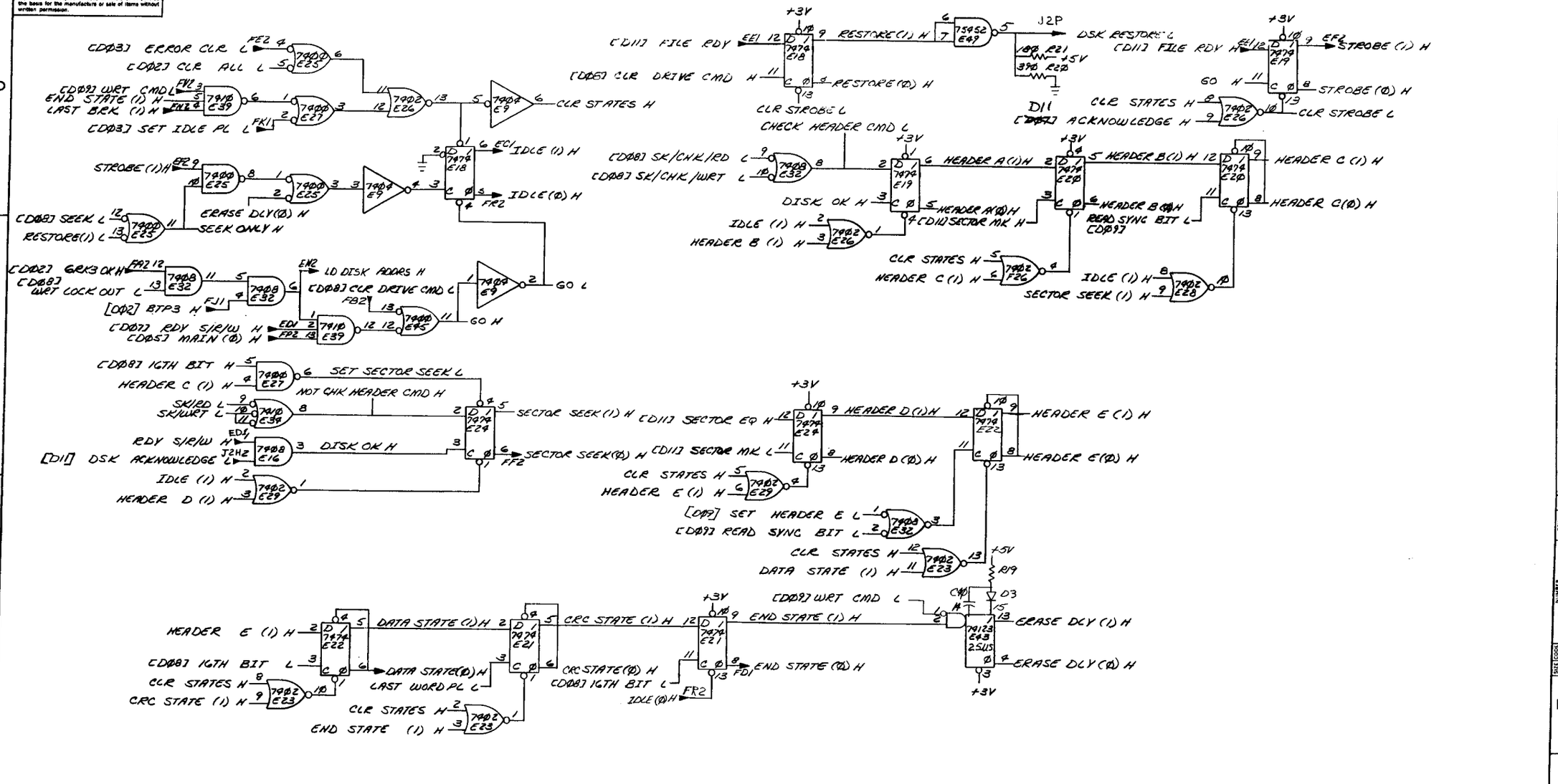

(MAJOR STATES)

FIRST USED ON OPTION/MODEL	QTY.	DESCRIPTION	PART NO.	ITEM NO.
RK8-E		PARTS LIST		

UNLESS OTHERWISE SPECIFIED DIMENSION IN INCHES. TOLERANCES

DECIMALS	ANGLES
.XXX = .005 .XX = .02 .X = .1	±0° 30'

REMOVE BURRS AND BREAK SHARP CORNERS SURFACE QUALITY ✓

MATERIAL —

FINISH —

		DATE
DRN.		7-14-72
CHK'D.		10-9-72
ENG.		10/9/72
PROJ. ENG.		10/9/72
PROD.		10/9/72

NEXT HIGHER ASSY. B-DI -RK8-0

SCALE —

SHEET 5 OF

digital EQUIPMENT CORPORATION MAYNARD MASSACHUSETTS

TITLE (DI0) CONTROL, RK8-E

SIZE	CODE	NUMBER	REV.
D	CS	M7106-0-1	A

DIST.

REVISIONS

CHANGE NO	REV

BRUNING 40-522 15840

DEC FORM NO DRD 102-B

This drawing and specifications, herein, are the property of Digital Equipment Corporation and shall not be reproduced or copied or used in whole or in part as the basis for the manufacture or sale of items without written permission.

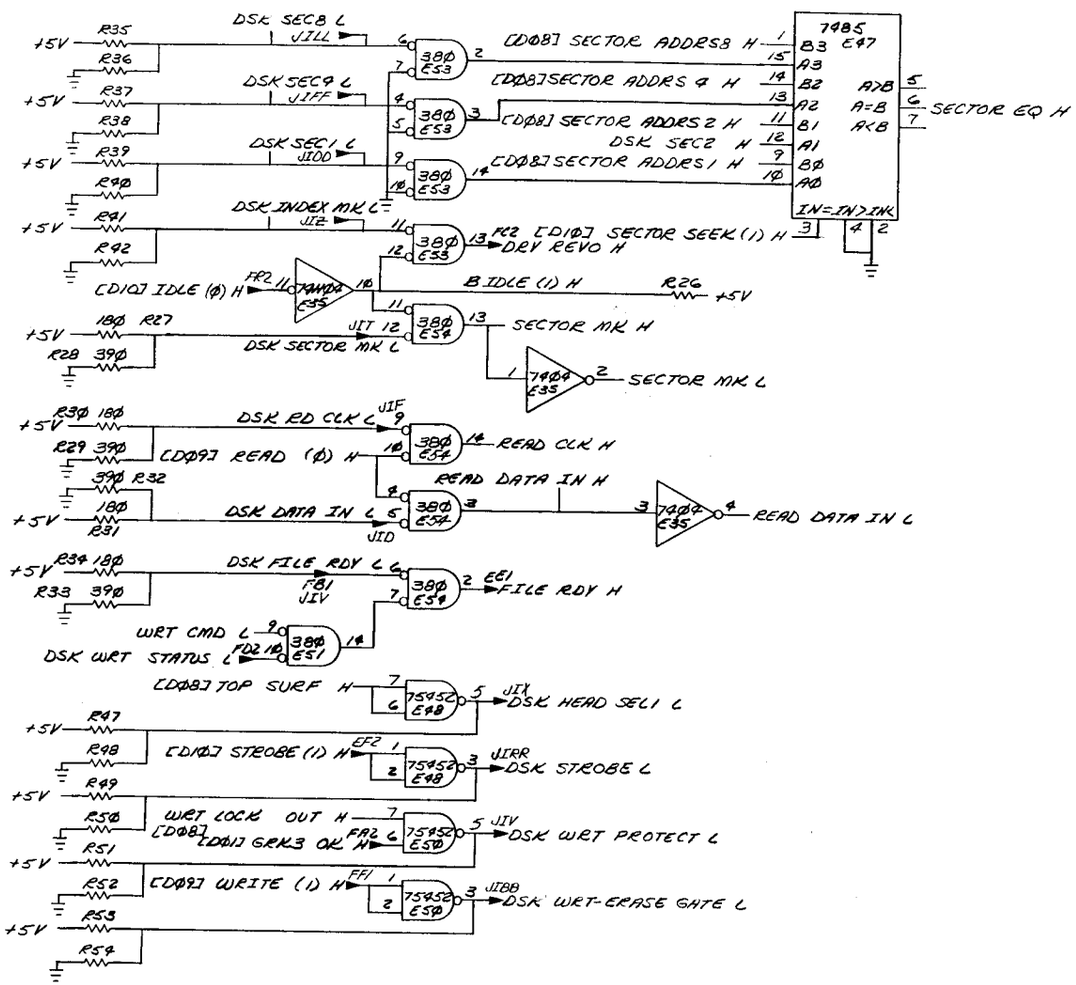

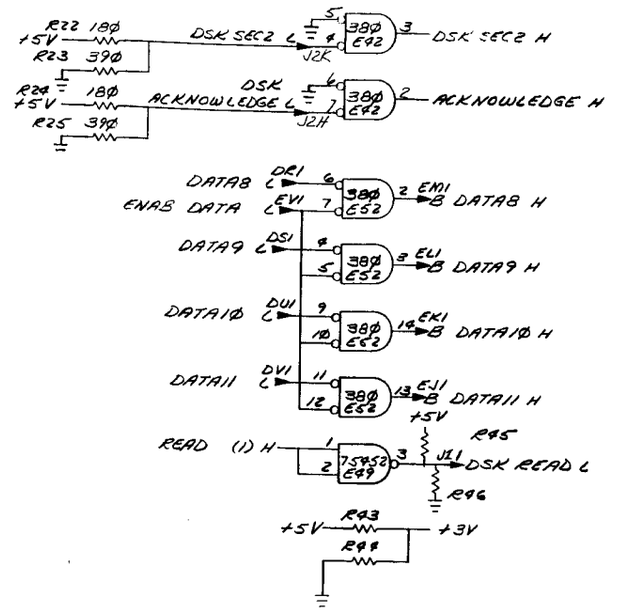

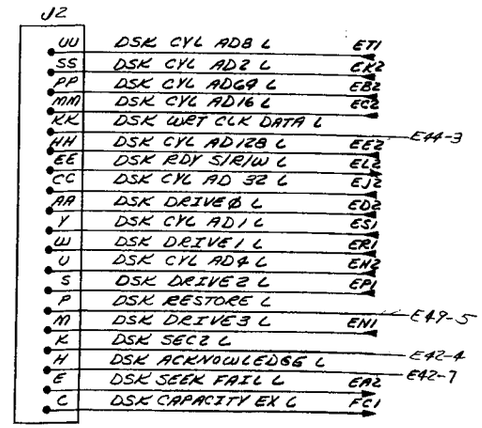

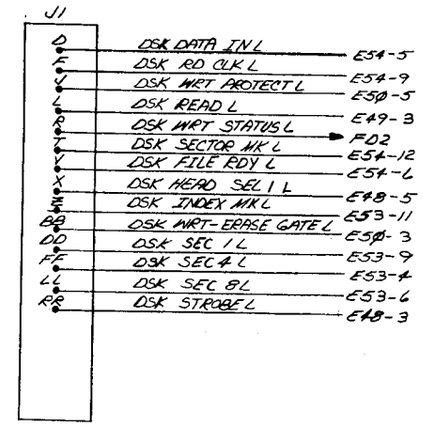

(DRIVE SIGNALS CABLE J2 DRIVERS)

FIRST USED ON OPTION/MODEL	QTY.	DESCRIPTION	PART NO.	ITEM NO.
RK8-E		PARTS LIST		

UNLESS OTHERWISE SPECIFIED DIMENSION IN INCHES. TOLERANCES
DECIMALS .XXX = .005 .XX = .02 .X = .1
ANGLES ±0° 30'
REMOVE BURRS AND BREAK SHARP CORNERS SURFACE QUALITY ✓
MATERIAL —
FINISH —

DRN. DATE 7-19-72
CHK'D. DATE
ENG. DATE
PROJ. ENG. DATE
PROD. DATE
NEXT HIGHER ASSY. B-M-RK8-Ø
SCALE —
SHEET 6 OF

digital EQUIPMENT CORPORATION MAYNARD MASSACHUSETTS

TITLE (DIT) CONTROL, RK8-E

SIZE	CODE	NUMBER	REV.
D	CS	M7106-Ø-1	A.

DIST.

REVISIONS

REV	CHANGE NO	CHK
A1		

BRUNING 40-322 15840
DEC FORM NO DRD 102-B

This drawing and specifications, herein, are the property of Digital Equipment Corporation and shall not be reproduced or copied or used in whole or in part as the basis for the manufacture or sale of items without written permission.

NOTES:
1. CABLE TO BE WIRED WITH GROOVE SIDE UP.
2. WHEN ATTACHING CONN (ITEM #2) TO CABLE (ITEM #3) USE SCOTCHFLEX LOCATOR PLATE #3443-24 AND SCOTCHFLEX ASSY. PRESS #344-5 FROM 3M COMPANY.
3. TAPE CABLE ≈ EVERY 1.5 FEET.

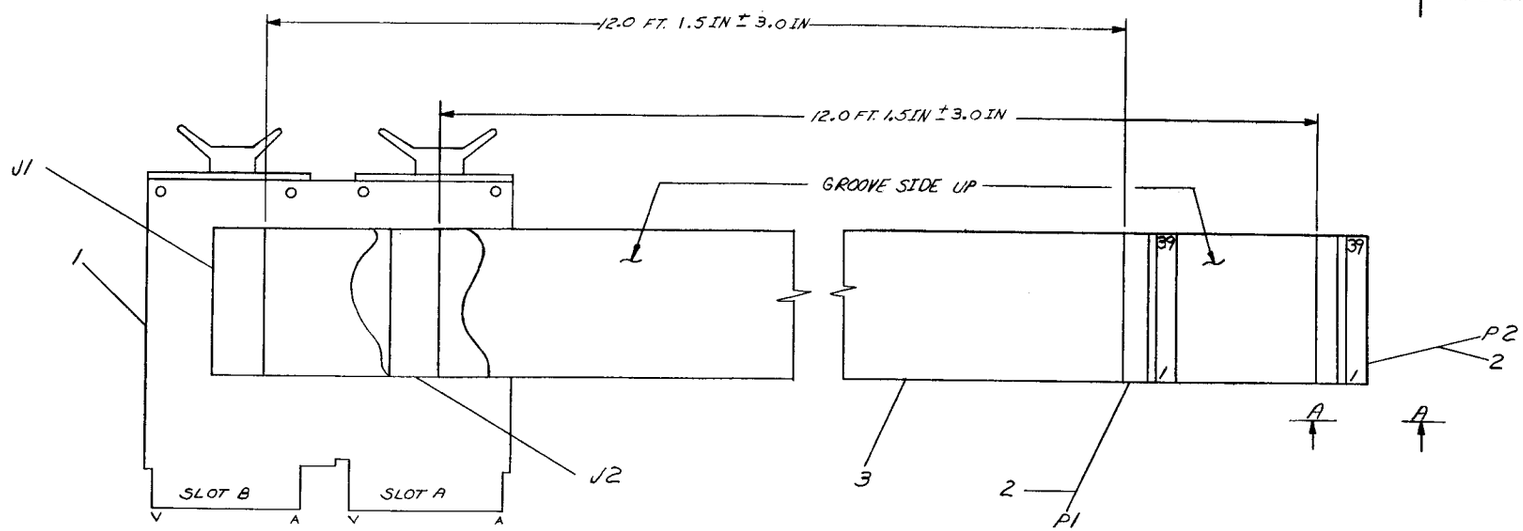

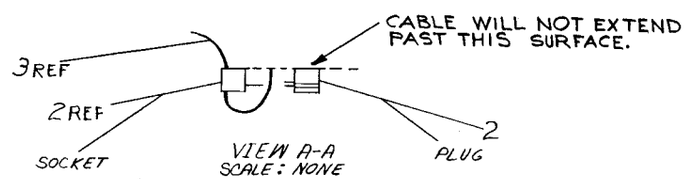

ITEM NO.	PARTS LIST DESCRIPTION	PART NO.	QTY.
4	TAPE, ELECTRICAL WHT	9008880	A/R
3	CABLE 40 CONDUCTOR 30 ANG	9107747-01	2
2.	SCOTCHFLEX CONN #3417-3M	1211206	2
1.	RK8-E CONTROL CABLE MOD	D-CS-MR33-0-1	1

FIRST USED ON OPTION/MODEL: RK8-E

UNLESS OTHERWISE SPECIFIED DIMENSION IN INCHES. TOLERANCES

DECIMALS	ANGLES
.XXX ± .005 .XX ± .02 .X ± .1	± 0° 30'

REMOVE BURRS AND BREAK SHARP CORNERS SURFACE QUALITY ✓

MATERIAL —

FINISH —

		DATE
DRN.	M. Rice	8/14/72
CHK'D.		
ENG.		
PROJ. ENG.		
PROD.	R. K. Sell	9-13-72

NEXT HIGHER ASSY.: D-UA-RK8-E-0

SCALE: NONE

SHEET 1 OF 2

digital EQUIPMENT CORPORATION MAYNARD MASSACHUSETTS

TITLE: CONTROL CABLE ASSY

SIZE	CODE	NUMBER	REV.
D	AD	7009026-0-0	

DIST.

REVISIONS: REV. | CHANGE NO. | CHK

BRUNING 40-107 1966

DFC FORM NO. DRD 100-A

This drawing and specifications, herein, are the property of Digital Equipment Corporation and shall not be reproduced or copied or used in whole or in part as the basis for the manufacture or sale of items without written permission.

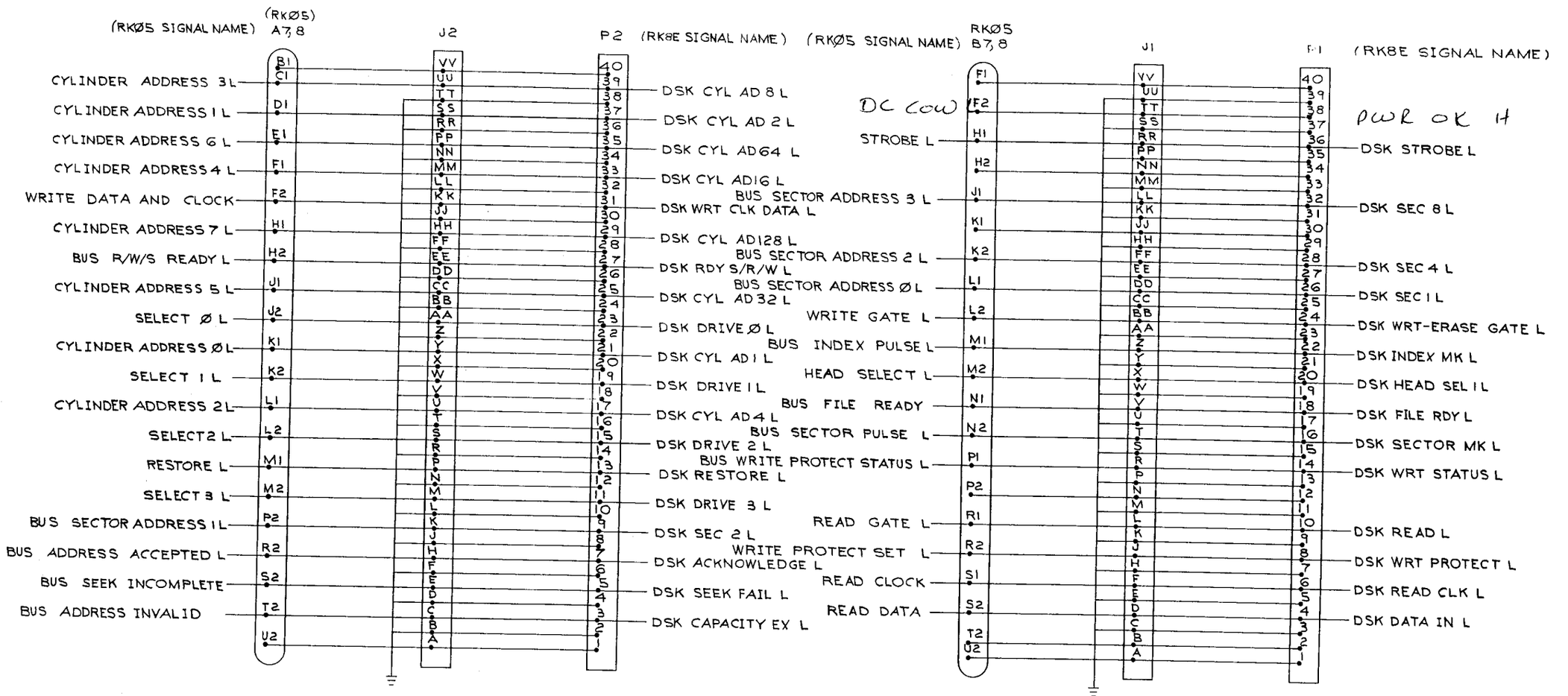

FIRST USED ON OPTION/MODEL	QTY.	DESCRIPTION	PART NO.	ITEM NO.
RK8-E		PARTS LIST		

UNLESS OTHERWISE SPECIFIED DIMENSION IN INCHES. TOLERANCES
DECIMALS .XXX = .005 .XX = .02 .X = .1
ANGLES ±0° 30'
REMOVE BURRS AND BREAK SHARP CORNERS SURFACE QUALITY ✓

MATERIAL
FINISH

DRN. DATE
CHK'D. DATE
ENG. DATE
PROJ. ENG. DATE
PROD. R.E. Oh DATE 10-18-72
NEXT HIGHER ASSY. CONTROL CABLE ASSY
SCALE
SHEET 2 OF 2

digital EQUIPMENT CORPORATION MAYNARD MASSACHUSETTS

TITLE CONTROL CABLE ASS'Y.

SIZE D CODE AD NUMBER 7009026-0-0 REV

REVISIONS REV CHANGE NO CHK

DRAWING 40-522 15840

DEC FORM NO ORD 102-B

PAGE REVISION CONTROL SHEET

SH NO.	PAGE REVISIONS	REMARKS
1		
2		
3		
ECO NO.		
ETCH REV.	A	
ENG.		
DATE		FIRST USED ON OPTION/MODEL

DRN.	DATE 10-12-72	digital EQUIPMENT CORPORATION MAYNARD, MASSACHUSETTS
CHK'D.	DATE 10/12/72	
ENG.	DATE 10/12/72	TITLE RK8 CONTROL CABLE MODULE
PROJ. ENG.	DATE 10/12/72	
PROD.	DATE 10-13-72	
NEXT HIGHER ASSY.		
D-AD-7009026-0-0		SIZE B / CODE CS / NUMBER M993-Ø-1 / REV.
SCALE —		
SHEET 1 OF 3		DIST.

"THIS DRAWING AND SPECIFICATIONS, HEREIN, ARE THE PROPERTY OF DIGITAL EQUIPMENT CORPORATION AND SHALL NOT BE REPRODUCED OR COPIED OR USED IN WHOLE OR IN PART AS THE BASIS FOR THE MANUFACTURE OR SALE OF ITEMS WITHOUT WRITTEN PERMISSION.
COPYRIGHT © DIGITAL EQUIPMENT CORPORATION"

This drawing and specifications, herein, are the property of Digital Equipment Corporation and shall not be reproduced or copied or used in whole or in part as the basis for the manufacture or sale of items without written permission.

NOTES:

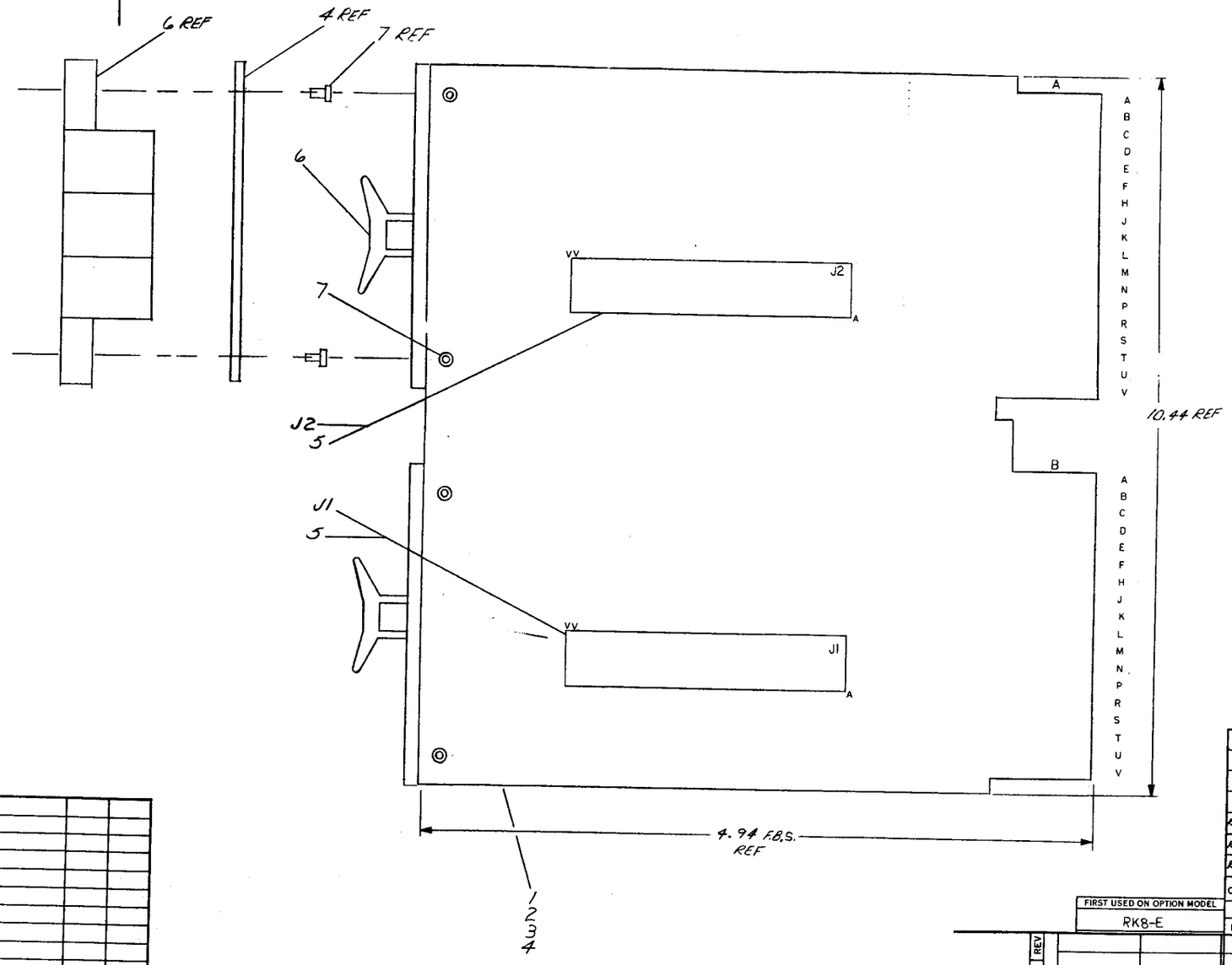

QTY	REF DESIGNATION	DESCRIPTION	PART NO.	ITEM NO.
4		EYELET, GS #4-7 E.B. STIMPSON	9006732	7
2		HANDLE, FLIP-CHIP, MAGENTA	9008337-06	6
2	J1, J2	CONN. 3M (40 PINS)	1210073-0	5
1		ETCHED CIRCUIT BOARD	5010178	4
REF		MODULE ECO HISTORY	B-MH-M993-0-6	3
REF		ASSY/DRILLING HOLE LAYOUT	D-AH-M993-0-5	2
REF		X-Y COORDINATE HOLE LOCATION	X-CO-M993-0-4	1

PARTS LIST

FIRST USED ON OPTION MODEL: RK8-E

ETCH BOARD REV: A

IC TYPE	GND	+ 5V
GND AND 5V ARE USUALLY PIN 7 AND 14 RESPECTIVELY EXCEPTIONS ARE STATED ABOVE		

IC PIN LOCATIONS

REV	CHANGE NO.	DEC NO.	EIA NO.	DEC NO.	EIA NO.

REVISIONS — CHK

SEMICONDUCTOR CONVERSION CHART

DRN. axibnt DATE 8/4/72
CHK'D. DATE
ENG. DATE
PROJ. ENG. DATE
PROD. DATE
NEXT HIGHER ASSY D-AD-7009026-0
SCALE NONE
SHEET 2 OF 3

digital EQUIPMENT CORPORATION MAYNARD, MASSACHUSETTS

TITLE: RK8-E CONTROL CABLE MODULE

SIZE D | CODE CS | NUMBER M993-0-1 | REV.

DIST.

BRUNING 40-522 14699

DEC FORM NO. DRD-135A

SIZE D | CODE CS | NUMBER M993-0-1 | REV.

This drawing and specifications, herein, are the property of Digital Equipment Corporation and shall not be reproduced or copied or used in whole or in part as the basis for the manufacture or sale of items without written permission.

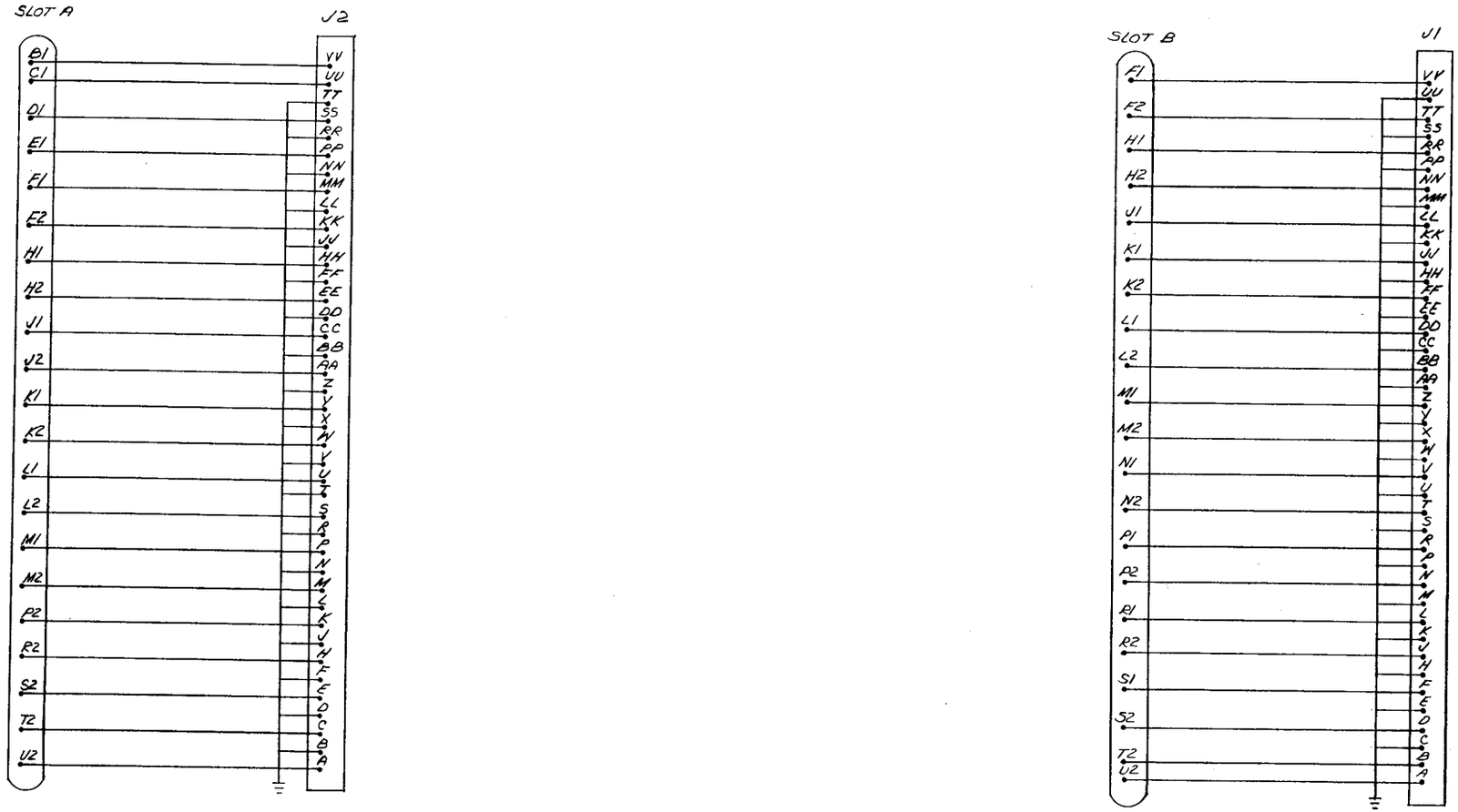

FIRST USED ON OPTION/MODEL	QTY.	DESCRIPTION	PART NO.	ITEM NO.
RK8-E		PARTS LIST		

UNLESS OTHERWISE SPECIFIED DIMENSION IN INCHES. TOLERANCES

DECIMALS	ANGLES
.XXX - .005 .XX - .02 .X - .1	±0° 30'

REMOVE BURRS AND BREAK SHARP CORNERS SURFACE QUALITY ✓

MATERIAL —

FINISH —

DRN. M. Grace	DATE 8/11/72	digital EQUIPMENT CORPORATION MAYNARD MASSACHUSETTS
CHK'D.	DATE	TITLE
ENG.	DATE 9/1/72	RK8 CONTROL CABLE MODULE
PROJ. ENG.	DATE 9-5-72	
PROD. RK	DATE 10-13-72	
NEXT HIGHER ASSY. D-AD 7009026 0-0		SIZE D CODE CS NUMBER M993-0-1 REV.
SCALE —		
SHEET 3 OF 3		DIST.

REVISIONS		
CHANGE NO		REV
C-K		

DRAWING 40-522 15840

DEC FORM NO DRD 102-B

SIZE D CODE CS NUMBER M993-0-1 REV

THIS SCHEMATIC IS FURNISHED ONLY FOR TEST AND MAINTENANCE PURPOSES. THE CIRCUITS ARE PROPRIETARY IN NATURE AND SHOULD BE TREATED ACCORDINGLY.
COPYRIGHT 1970 BY DIGITAL EQUIPMENT CORPORATION

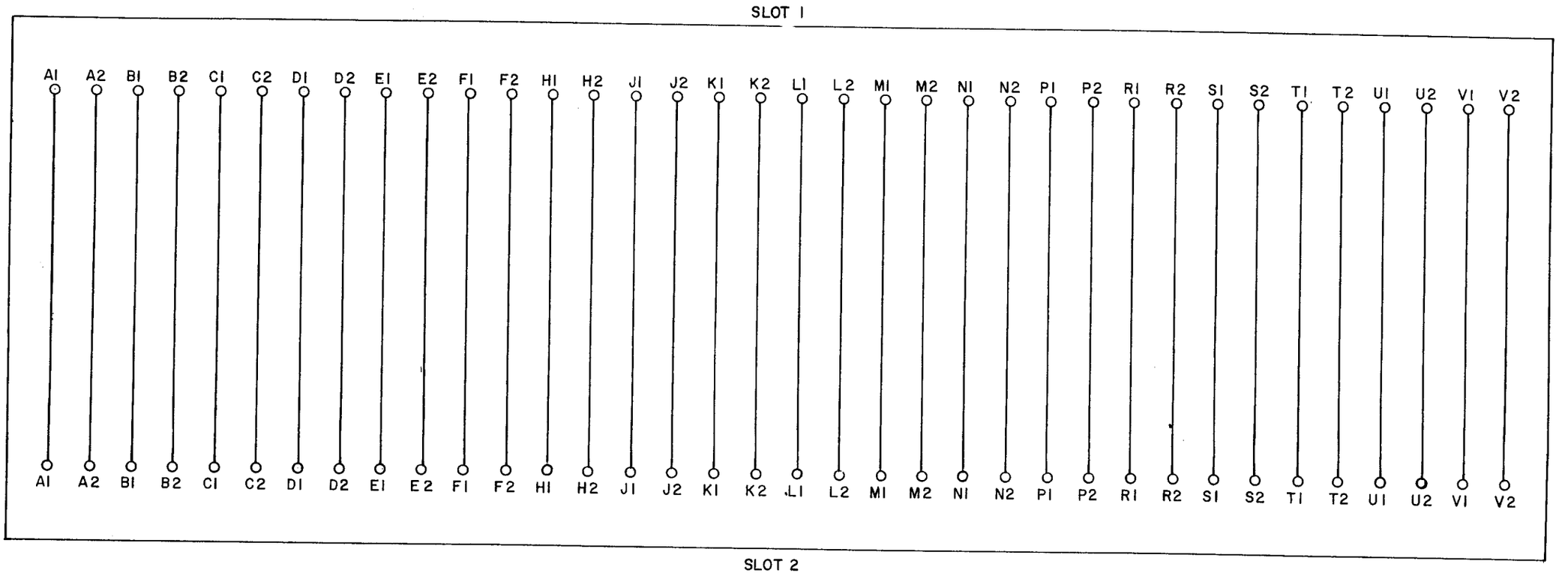

UNLESS OTHERWISE INDICATED:
CONNECTOR IS A 1210152

REVISIONS		
CHK	CHG NO.	REV.
	00002	B
B.A. Thiele 8-5-78		
P. GARDNER		
J.G. Pol P.G.		

DRN.	jeanne french	DATE	7/29/70
CHK'D		DATE	1-29-71
ENG.		DATE	1-29-71
PROD.		DATE	

TRANSISTOR & DIODE CONVERSION CHART

DEC	EIA	DEC	EIA

digital EQUIPMENT CORPORATION
MAYNARD, MASSACHUSETTS

TITLE EDGE CONNECTOR H851

SIZE	CODE	NUMBER	REV.
B	CS	H851-0-1	B

PRINTED CIRCUIT REV. C

DEC FORM NO.
DRB 102

DIST. 324434435 3

SIZE	CODE	NUMBER	REV.
B	CS	H851-0-1	B

digital EQUIPMENT CORPORATION
MAYNARD, MASSACHUSETTS

DRAWING DIRECTORY

CUSTOMER PRINT SET INDEX

	SEQUENCE
DRAWING DIRECTORY	B-DD-RKØ5-Ø SHEET #1 ONLY
MODULE UTILIZATION LIST	C-MU-RKØ5-Ø-2
READ/WRITE	D-CS-G18Ø-Ø-1
INDEX SECTOR	D-CS-M77ØØ-Ø-1
CONTROL & INTERLOCK	D-CS-M77Ø2-Ø-1
TRACK ADDRESS DIFFERENCE	D-CS-M77Ø1-Ø-1
POSITION SERVO PREAMP	D-CS-G938-Ø-1
SERVO POWER AMP CIRCUIT	D-CS-H6Ø4-Ø-1
CONTROL PANEL CIRCUIT	D-CS-5409698-0-1
RELAY BOARD CIRCUIT	D-CS-5409574-0-1
CHASSIS WIRING	D-BD-RKØ5-Ø-1
WIRE LIST	K-WL-RKØ5-Ø-3
ACCESSORY LIST	A-AL-RKØ5-Ø-17

SEQUENCE

THIS IS PRINT SET [X]

UNIT VARIATIONS

VARIATION	TITLE	PRINT SET TYPE RKØ5-Ø
RKØ5-AA	DECPACK 115V 60HZ	X
RKØ5-AB	DECPACK 230V 60HZ	X
RKØ5-BA	DECPACK 115V 50HZ	X
RKØ5-BB	DECPACK 230V 50HZ	X

REVISIONS

DATE	CHG. NO.	REV
	RKØ5-14	A
E.S.	RKØ5-16	B
J.J.	RKØ5-23	C

USED ON OPTION/MODEL

		DATE
DRN.	J. FLEMING	1/26/72
CHK'D	J. Fleming	5-2-72
PROJ ENG.	[illegible]	5/2/72
PROD.	A. Karlberg	5/4/72
FIELD SERV.	[illegible]	5/4/72

TITLE: DECPACK ASSY

SIZE	CODE	NUMBER	REV
B	DD	RKØ5-Ø	C

SHEET 1 OF 5

DIST

DRB 106

DEC 16-(325)-1062-1-N871

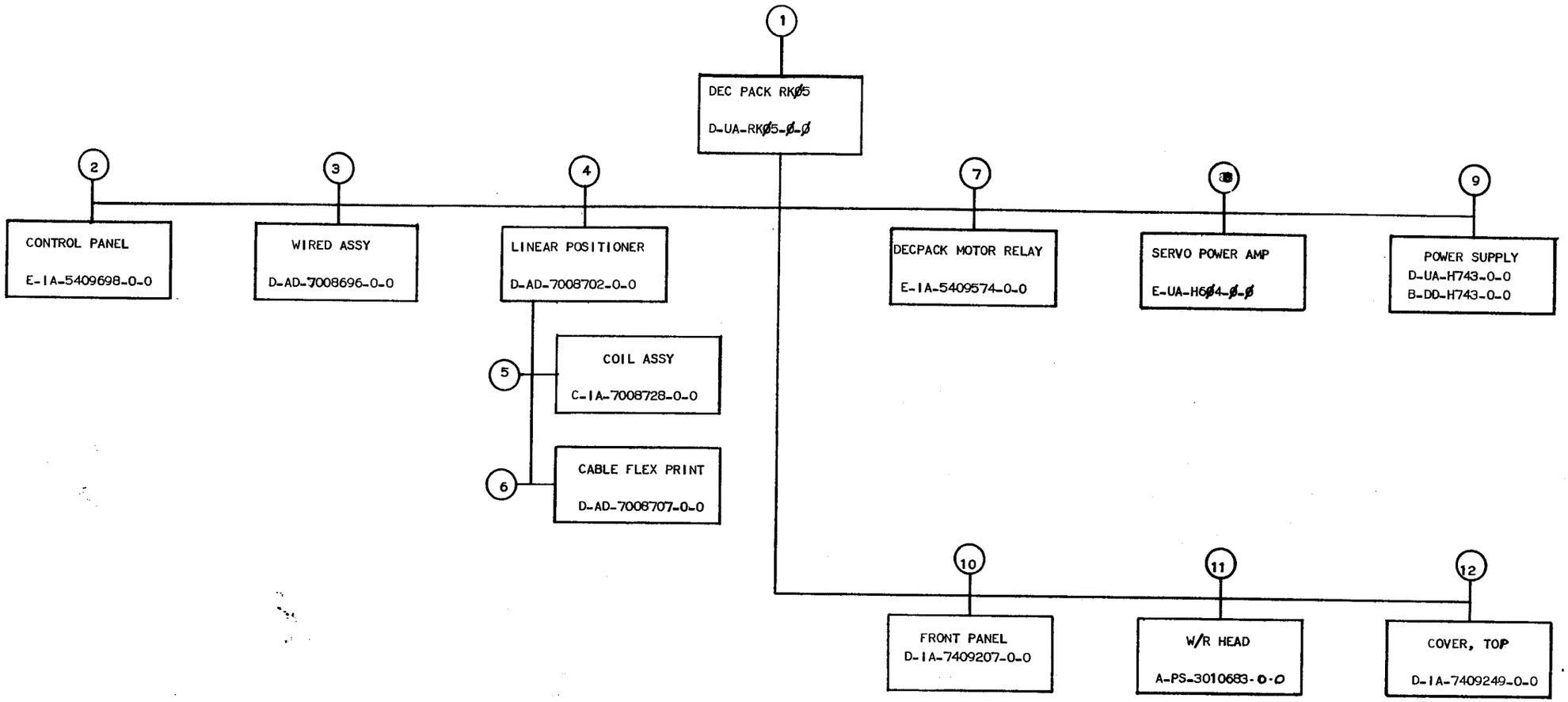

TITLE		SIZE	CODE	NUMBER	REV
DECPACK ASSY	SHEET 2 OF 5	B	DD	RKØ5-Ø	C

DRB 107
DEC 16—(325)—1062—3—N871

DIGITAL EQUIPMENT CORPORATION WORLD-WIDE SALES AND SERVICE

146 Main Street, Maynard, Massachusetts, U.S.A. 01754
Telephone: From Metropolitan Boston: 646-8600 • Elsewhere: (617)-897-5111
TWX: 710-347-0212 Cable: DIGITAL MAYN Telex: 94-8457

UNITED STATES

NORTHEAST

REGIONAL OFFICE
275 Wyman Street, Waltham, Massachusetts 02154
Telephone: (617)-890-0320/0330 TWX: 710-324-6919

WALTHAM
15 Lunda Street, Waltham, Massachusetts 02154
Telephone: (617)-891-1030 TWX: 710-324-6919

CAMBRIDGE/BOSTON
899 Main Street, Cambridge, Massachusetts 02139
Telephone: (617)-491-6130 TWX: 710-320-1167

ROCHESTER
130 Allens Creek Road, Rochester, New York 14618
Telephone: (716)-461-1700 TWX: 710-253-3078

CONNECTICUT
240 Pomeroy Ave., Meriden, Conn. 06450
Telephone: (203)-237-8441/7466 TWX: 710-461-0054

MID-ATLANTIC — SOUTHEAST

REGIONAL OFFICE:
U.S. Route 1, Princeton, New Jersey 08540
Telephone: (609)-452-2940 TWX: 510-685-2338

NEW YORK
95 Cedar Lane, Englewood, New Jersey 07631
Telephone: (201)-871-4984, (212)-594-6955, (212)-736-0447
TWX: 710-991-9721

NEW JERSEY
1259 Route 46, Parsippany, New Jersey 07054
Telephone: (201)-335-3300 TWX: 710-987-8319

PRINCETON
U.S. Route 1
Princeton, New Jersey 08540
Telephone: (609) 452-2940 TWX: 510-685-2338

LONG ISLAND
1 Huntington Quadrangle
Suite 1SO7 Huntington Station, New York 11746
Telephone: (516)-694-4131, (212)-895-8095

PHILADELPHIA
Station Square Three, Paoli, Pennsylvania 19301
Telephone: (215)-647-4900/4410 Telex: 510-668-8395

WASHINGTON
Executive Building
6811 Kenilworth Ave., Riverdale, Maryland 20840
Telephone: (301)-779-1600/752-8797 TWX: 710-826-9662

DURHAM/CHAPEL HILL
2704 Chapel Hill Boulevard
Durham, North Carolina 27707
Telephone: (919)-489-3347 TWX: 510-927-0912

ORLANDO
Suite 130, 7001 Lake Ellenor Drive, Orlando, Florida 32809
Telephone: (305)-851-4450 TWX: 810-850-0180

ATLANTA
2815 Clearview Place, Suite 100,
Atlanta, Georgia 30340
Telephone: (404)-451-3734/3735/3736 TWX: 810-757-4223

MID-ATLANTIC — SOUTHEAST (cont.)

KNOXVILLE
6311 Kingston Pike, Suite 21E
Knoxville, Tennessee 37919
Telephone: (615)-588-6571 TWX: 810-583-0123

CENTRAL

REGIONAL OFFICE:
1850 Frontage Road, Northbrook, Illinois 60062
Telephone: (312)-498-2500 TWX: 910-686-0655

PITTSBURGH
400 Penn Center Boulevard
Pittsburgh, Pennsylvania 15235
Telephone: (412)-243-9404 TWX: 710-797-3657

CHICAGO
1850 Frontage Road, Northbrook, Illinois 60062
Telephone: (312)-498-2500 TWX: 910-686-0655

ANN ARBOR
230 Huron View Boulevard, Ann Arbor, Michigan 48103
Telephone: (313)-761-1150 TWX: 810-223-6053

INDIANAPOLIS
21 Beachway Drive — Suite G
Indianapolis, Indiana 46224
Telephone: (317)-243-8341 TWX: 810-341-3436

MINNEAPOLIS
Suite 111, 8030 Cedar Avenue South,
Minneapolis, Minnesota 55420
Telephone: (612)-854-6562-3-4-5 TWX: 910-576-2818

CLEVELAND
Park Hill Bldg., 35104 Euclid Ave.
Willoughby, Ohio 44094
Telephone: (216)-946-8484 TWX: 810-427-2608

ST. LOUIS
Suite 110, 115 Progress Pky., Maryland Heights,
Missouri 63043
Telephone: (314)-878-4310 TWX: 910-764-0831

DAYTON
3101 Kettering Blvd., Dayton, Ohio 45439
Telephone: (513)-299-7377 TWX: 810-459-1676

MILWAUKEE
8531 W. Capitol Drive, Milwaukee, Wisconsin 53222
Telephone: (414)-463-9110 TWX: 910-262-1199

DALLAS
8855 North Stemmons Freeway
Dallas, Texas 75247
Telephone: (214)-638-4880 TWX: 910-861-4000

HOUSTON
3417 Milam Street, Suite A, Houston, Texas 77002
Telephone: (713)-524-2961 TWX: 910-881-1651

CENTRAL (cont.)

NEW ORLEANS
3100 Ridgelake Drive, Suite 108
Metairie, Louisiana 70002
Telephone: 504-837-0257

WEST

REGIONAL OFFICE
310 Soquel Way, Sunnyvale, California 94086
Telephone: (408)-735-9200

ANAHEIM
801 E. Ball Road, Anaheim, California 92805
Telephone: (714)-776-6932/8730 TWX: 910-59[illegible]-1189

WEST LOS ANGELES
1510 Cotner Avenue, Los Angeles, California 90025
Telephone: (213)-479-3791/4318 TWX: 910-342-6999

SAN DIEGO
3444 Hancock Street
San Diego, California 92110
Telephone: (714)-298-0591, 0593 TWX: 910-335-1230

SAN FRANCISCO
1400 Terra Bella
Mountain View, California 94040
Telephone: (415)-964-6200 TWX: 910-373-1266

PALO ALTO
560 San Antonio Rd., Palo Alto, California 94306
Telephone: (415)-969-6200 TWX: 910-373-1266

OAKLAND
7850 Edgewater Drive
Oakland, California 94621
Telephone: (415)-635-5453/7830 TWX: 910-366-7238

ALBUQUERQUE
6303 Indian School Road, N.E.
Albuquerque, N.M. 87110
Telephone: (505)-296-5411/5428 TWX: 910-989-0614

DENVER
2305 South Colorado Blvd., Suite #5
Denver, Colorado 80222
Telephone: (303)-757-3332/758-1656/758-1659
TWX: 910-931-2650

SEATTLE
1521 130th N.E., Bellevue, Washington 98005
Telephone: (206)-454-4058/455-5404 TWX: 910-443-2306

SALT LAKE CITY
431 South 3rd East, Salt Lake City, Utah 84111
Telephone: (801)-328-9838 TWX: 910-925-583[illegible]

PHOENIX
4358 East Broadway Road
Phoenix, Arizona 85040
Telephone: (602) 268-3488 TWX: 910-950-4691

PORTLAND
Suite 168
5319 S.W. Canyon Court, Portland, Ore. 97221
Telephone: (503) 297-3761/3765

INTERNATIONAL

EUROPEAN HEADQUARTERS

Digital Equipment Corporation International Europe
81 Route de l'Aire
1211 Geneva 26, Switzerland
Telephone: 42 79 50 Telex: 22 683

SWEDEN

Digital Equipment Aktiebolag

STOCKHOLM
Vretenvagen 2, S-171 54 Solna, Sweden
Telephone: 98 13 90 Telex: 170 50
Cable: Digital Stockholm

NEW ZEALAND

Digital Equipment Corporation Ltd.

AUCKLAND
Hilton House, 430 Queen Street, Box 2471 A,
Auckland, New Zealand
Telephone: 75-533

INTERNATIONAL (cont.)

FRANCE

Equipment Digital S.A.R.L.

PARIS
327 Rue de Charenton, 75 Paris 12 ème, France
Telephone: 344-76-07 Telex: 21339

GRENOBLE
10 rue Auguste Ravier, F-38 Grenoble, France
Telephone: (76) 87 87 32 Telex: 32 882 F (Code 212)

GERMANY

Digital Equipment GmbH

MUNICH
8 Muenchen 13, Wallensteinplatz 2
Telephone: 0811-35031 Telex: 524-226

COLOGNE
5 Koeln, Bismarckstrasse 7,
Telephone: 0221-522181 Telex: 888-2269
Telegram: Flip Chip Koeln

FRANKFURT
6078 Neu-Isenburg 2
Am Forsthaus Gravenbruch 5-7
Telephone: 06102-5526 Telex: 41-76-82

HANNOVER
3 Hannover, Podbielskistrasse 102
Telephone: 0511-69-70-95 Telex: 922-952

AUSTRIA

Digital Equipment Corporation Ges.m.b.H

VIENNA
Mariahilferstrasse 136, 1150 Vienna 15, Austria
Telephone: 85 51 86

UNITED KINGDOM

Digital Equipment Co., Ltd.

U.K. HEADQUARTERS
Arkwright Road, Reading, Berks.
Telephone: 0734-583555 Telex: 84327

READING
The Evening Post Building, Tessa Road
Reading, Berks.

BIRMINGHAM
29/31, Birmingham Road, Sutton Coldfield, Warwicks.
Telephone: (0044) 21-355 5501 Telex: 337 060

MANCHESTER
13 Upper Precinct, Walkden, Manchester M28 5AZ
Telephone: 061-790-8411 Telex: 668666

LONDON
Bilton House, Uxbridge Road, Ealing, London W.5.
Telephone: 01-579-2334 Telex: 22371

EDINBURGH
Shiel House, Craigshill, Livingston,
West Lothian, Scotland
Telephone: 32705 / Telex: 727113

NETHERLANDS

THE HAGUE
Digital Equipment N.V.
Sir Winston Churchilllaan 370
Rijswijk/The Hague, Netherlands
Telephone: 070-995-160 Telex: 32533

BELGIUM

BRUSSELS
Digital Equipment N.V./S.A.
108 Rue D'Arlon
1040 Brussels, Belgium
Telephone: 02-139256 Telex: 25297

NORWAY

Digital Equipment

OSLO
c/o Firma Service
Waldenmarthranesgate 84-B-86
Oslo 1, Norway
Telephone: 37 19 85, 37 02 30 Telex: 166 43

DENMARK

Digital Equipment Corporation

COPENHAGEN
Vesterbrogade 140, 1620 Copenhagen V

SWITZERLAND

Digital Equipment Corporation S.A.

GENEVA
81 Route de l'Aire
1211 Geneva 26, Switzerland
Telephone: 42 79 50 Telex: 22 683

ZURICH
Scheuchzerstrasse 21
CH-8006 Zurich, Switzerland
Telephone: 01/60 35 66 Telex: 56059

ITALY

Digital Equipment S.p.A.

MILAN
Corso Garibaldi 49, 20121 Milano, Italy
Telephone: 872 748 694 394 Telex: 33615

SPAIN

MADRID
Ataio Ingenieros S.A., Enrigue Larreta 12, Madrid 16
Telephone: 215 35 43 / Telex: 27249

BARCELONA
Ataio Ingenieros S.A., Ganduxer 76, Barcelona 6
Telephone: 221 44 66
Digital Equipment Corporation Ttd.

AUSTRALIA

Digital Equipment Australia Pty. Ltd.

SYDNEY
P.O. Box 491, Crows Nest
N.S.W. Australia 3065
Telephone: 439-2566 Telex: AA20740
Cable: Digital, Sydney

MELBOURNE
60 Park Street, South Melbourne, Victoria, 3205
Telephone: 696-142 Telex: AA40616

PERTH
643 Murray Street
West Perth, Western Australia 6005
Telephone: 214-993 Telex: AA92140

BRISBANE
139 Merivale Street, South Brisbane
Queensland, Australia 4101
Telephone 444-047 Telex: AA40616

ADELAIDE
6 Montrose Avenue
Norwood, South Australia 5067
Telephone: 631-339 Telex: AA82825

CANADA

Digital Equipment of Canada, Ltd.

CANADIAN HEADQUARTERS
150 Rosamond Street, Carleton Place, Ontario
Telephone: (613)-257-2615 TWX: 610-561-1651

OTTAWA
120 Holland Street, Ottawa 3, Ontario K1Y 0X7
Telephone: (613)-725-2193 TWX: 610-562-8907

TORONTO
230 Lakeshore Road East, Port Credit, Ontario
Telephone: (416)-274-1241 TWX: 610-492-4306

MONTREAL
9675 Cote de Liesse Road
Dorval, Quebec, Canada 760
Telephone: 514-636-9393 TWX: 610-422-4124

EDMONTON
5531 - 103 Street
Edmonton, Alberta, Canada
Telephone: (403)-434-9333 TWX: 610-831-2248

VANCOUVER
Digital Equipment of Canada, Ltd.
2210 West 12th Avenue
Vancouver 9, British Columbia, Canada
Telephone: (604)-736-5616 TWX: 610-929-2006

ARGENTINA

BUENOS AIRES
Coasin S.A.
Virrey del Pino 4071, Buenos Aires
Telephone: 52-3185 Telex: 012-2284

VENEZUELA

CARACAS
Coasin S.A. (Sales only)
Apartado 50939
Salana Grande No. 1, Caracas
Telephone: 72-9637 Cable: INSTRUVEN

CHILE

SANTIAGO
Coasin Chile Ltda. (sales only)
Casilla 14588, Correo 15, Santiago
Telephone: 396713 Cable: COACHIL

JAPAN

TOKYO
Rikei Trading Co., Ltd. (sales only)
Kozato-Kaikan Bldg.
No. 18-14, Nishishimbashi 1-chome
Minato-Ku, Tokyo, Japan
Telephone: 5915246 Telex: 781-4208
Digital Equipment Corporation International
Kowa Building No. 17, Second Floor
2-7 Nishi-Azabu 1-Chome
Minato-Ku, Tokyo, Japan
Telephone: 404-5894/6 Telex: TK-6428

PHILIPPINES

Stanford Computer Corporation
P.O. Box 1608
416 Dasmarinas St., Manila
Telephone: 49-68-96 Telex: 742-0352

INDIA

H.S. Sonawala Mg Director (Sales Only)
HINDITRON SERVICES PUT LTD.
69/A Nepean Sea Road
Bombay, India