"THIS DRAWING AND SPECIFICATIONS, HEREIN, ARE THE PROPERTY OF DIGITAL EQUIPMENT CORPORATION AND SHALL NOT BE REPRODUCED OR COPIED OR USED IN WHOLE OR IN PART AS THE BASIS FOR THE MANUFACTURE OR SALE OF ITEMS WITHOUT WRITTEN PERMISSION.
COPYRIGHT © 1977 DIGITAL EQUIPMENT CORPORATION"

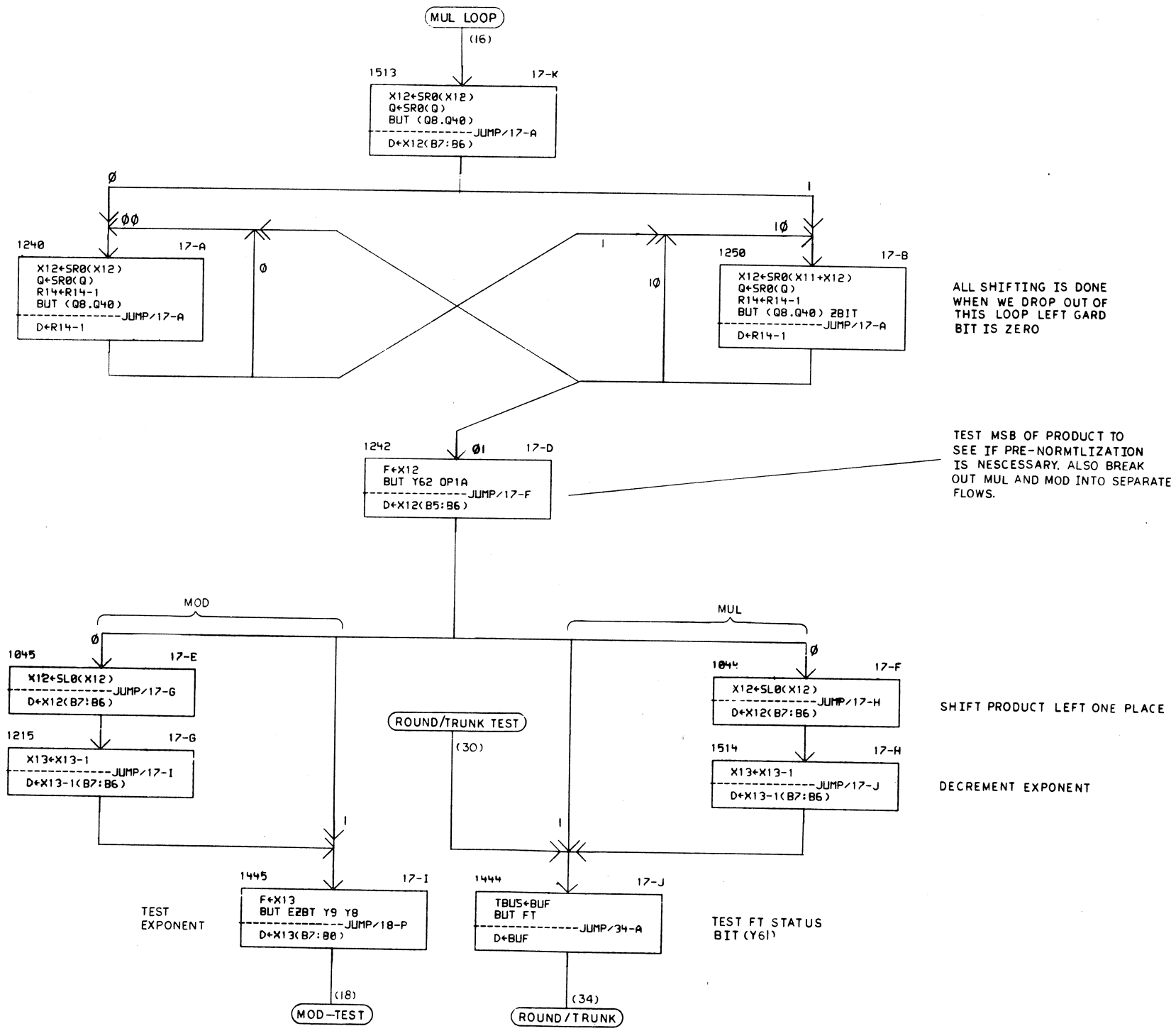

REVISIONS		
CHK	CHANGE NO.	REV.

TITLE	SIZE	CODE	NUMBER	REV.
FPII-A FLOWS (17)	D	FD	FPII-A-2	
SCALE —	SHEET 20 OF 40	DIST.		

"THIS DRAWING AND SPECIFICATIONS, HEREIN, ARE THE PROPERTY OF DIGITAL EQUIPMENT CORPORATION AND SHALL NOT BE REPRODUCED OR COPIED OR USED IN WHOLE OR IN PART AS THE BASIS FOR THE MANUFACTURE OR SALE OF ITEMS WITHOUT WRITTEN PERMISSION.
COPYRIGHT © 1977 DIGITAL EQUIPMENT CORPORATION"

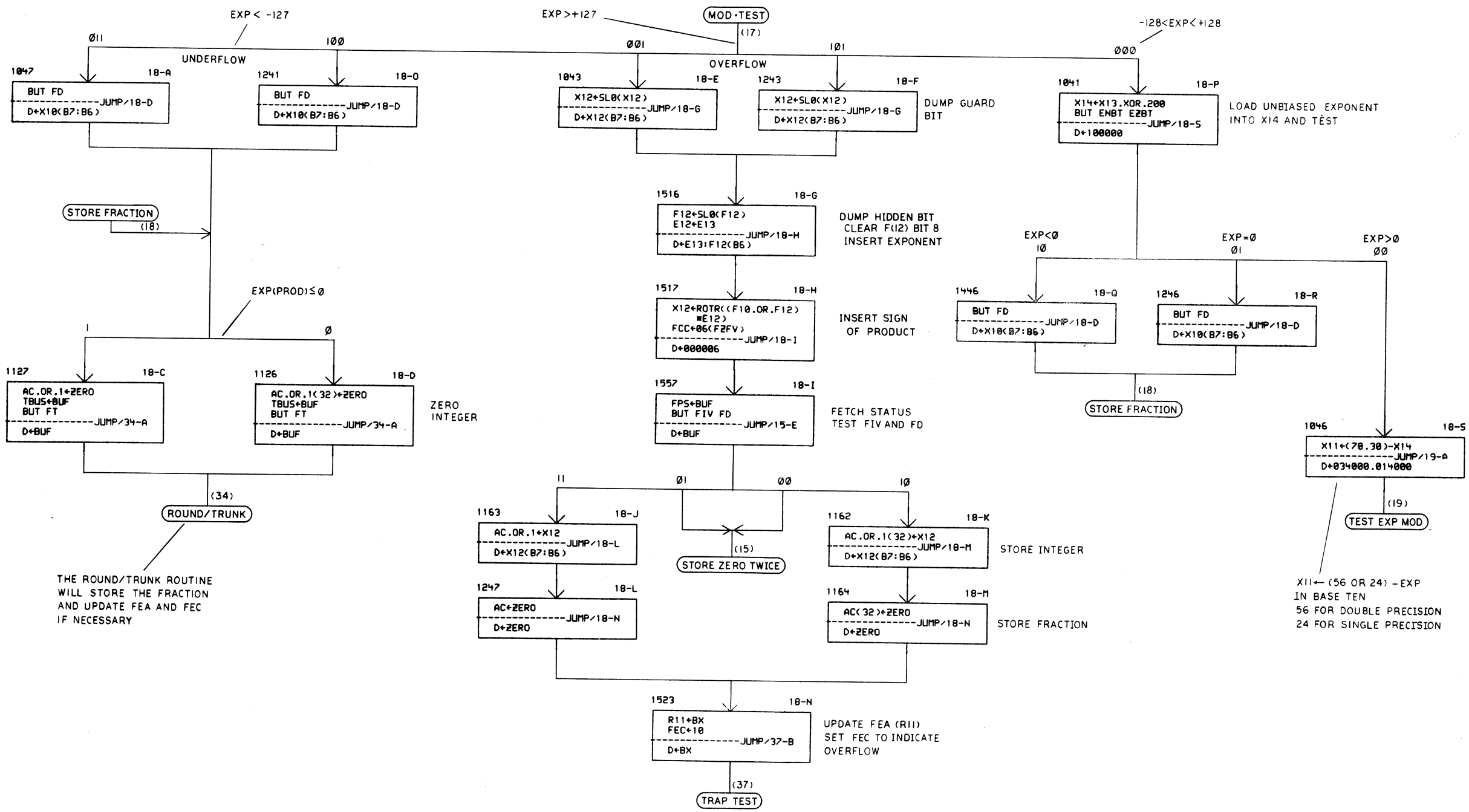

REVISIONS		
CHK	CHANGE NO.	REV.

TITLE	SIZE	CODE	NUMBER	REV.
FPII-A FLOWS (18)	D	FD	FPII-A-2	
SCALE —	SHEET 21 OF 40		DIST.	

"THIS DRAWING AND SPECIFICATIONS, HEREIN, ARE THE PROPERTY OF DIGITAL EQUIPMENT CORPORATION AND SHALL NOT BE REPRODUCED OR COPIED OR USED IN WHOLE OR IN PART AS THE BASIS FOR THE MANUFACTURE OR SALE OF ITEMS WITHOUT WRITTEN PERMISSION. COPYRIGHT © 1977 DIGITAL EQUIPMENT CORPORATION"

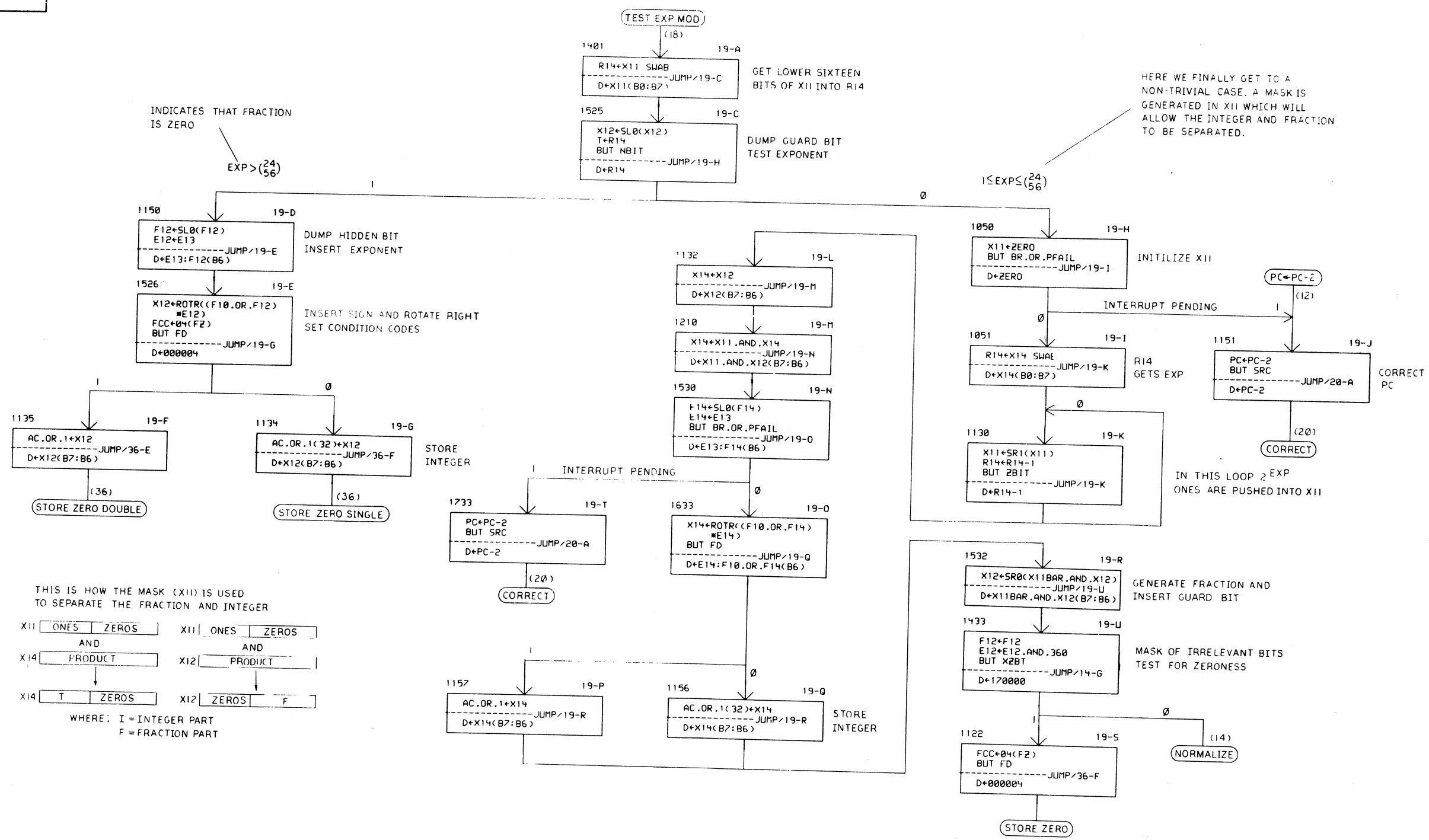

THIS IS HOW THE MASK (X11) IS USED TO SEPARATE THE FRACTION AND INTEGER

X11	ONES	ZEROS	X11	ONES	ZEROS
	AND			AND	
X14	PRODUCT		X12	PRODUCT	
X14	T	ZEROS	X12	ZEROS	F

WHERE: I = INTEGER PART
F = FRACTION PART

REVISIONS		
CHK	CHANGE NO.	REV.

TITLE	SIZE	CODE	NUMBER	REV.
FPII-A FLOWS (19)	D	FD	FPII-A-2	
SCALE —	SHEET 22 OF 40	DIST.		

DEC FORM NO. DRD 130

61

"THIS DRAWING AND SPECIFICATIONS, HEREIN, ARE THE PROPERTY OF DIGITAL EQUIPMENT CORPORATION AND SHALL NOT BE REPRODUCED OR COPIED OR USED IN WHOLE OR IN PART AS THE BASIS FOR THE MANUFACTURE OR SALE OF ITEMS WITHOUT WRITTEN PERMISSION.
COPYRIGHT © 1977 DIGITAL EQUIPMENT CORPORATION"

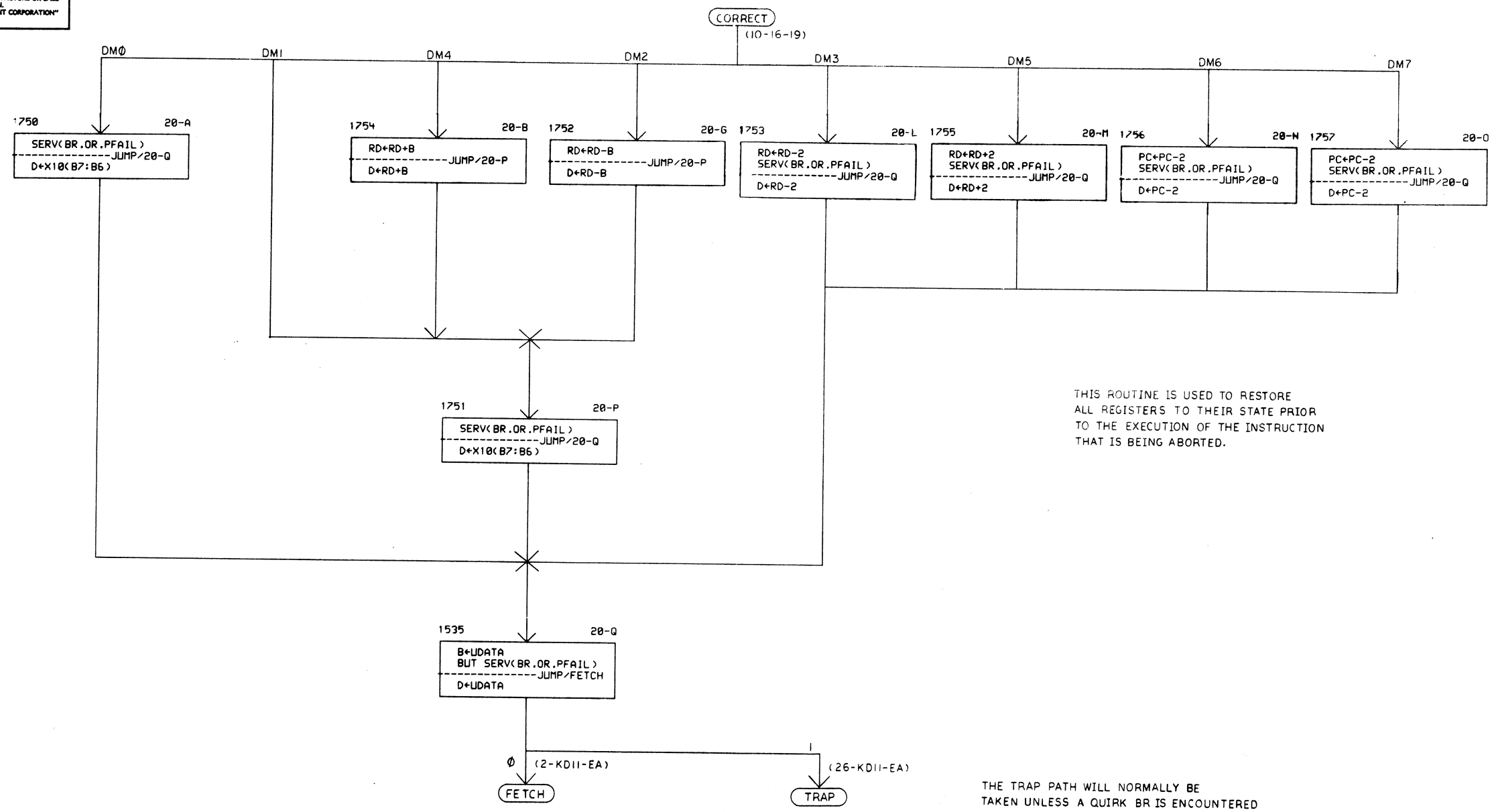

THIS ROUTINE IS USED TO RESTORE ALL REGISTERS TO THEIR STATE PRIOR TO THE EXECUTION OF THE INSTRUCTION THAT IS BEING ABORTED.

THE TRAP PATH WILL NORMALLY BE TAKEN UNLESS A QUIRK BR IS ENCOUNTERED (A BR THAT IS ASSERTED AND THAN NEGATED BEFORE THE PROCESSOR ISSUES A BG)

REVISIONS		
CHK	CHANGE NO.	REV.

TITLE	SIZE	CODE	NUMBER	REV.
FP11 A FLOWS (20)	D	FD	FP11-A-2	
SCALE —	SHEET 23 OF 40	DIST.		

"THIS DRAWING AND SPECIFICATIONS, HEREIN, ARE THE PROPERTY OF DIGITAL EQUIPMENT CORPORATION AND SHALL NOT BE REPRODUCED OR COPIED OR USED IN WHOLE OR IN PART AS THE BASIS FOR THE MANUFACTURE OR SALE OF ITEMS WITHOUT WRITTEN PERMISSION. COPYRIGHT © 1977 DIGITAL EQUIPMENT CORPORATION"

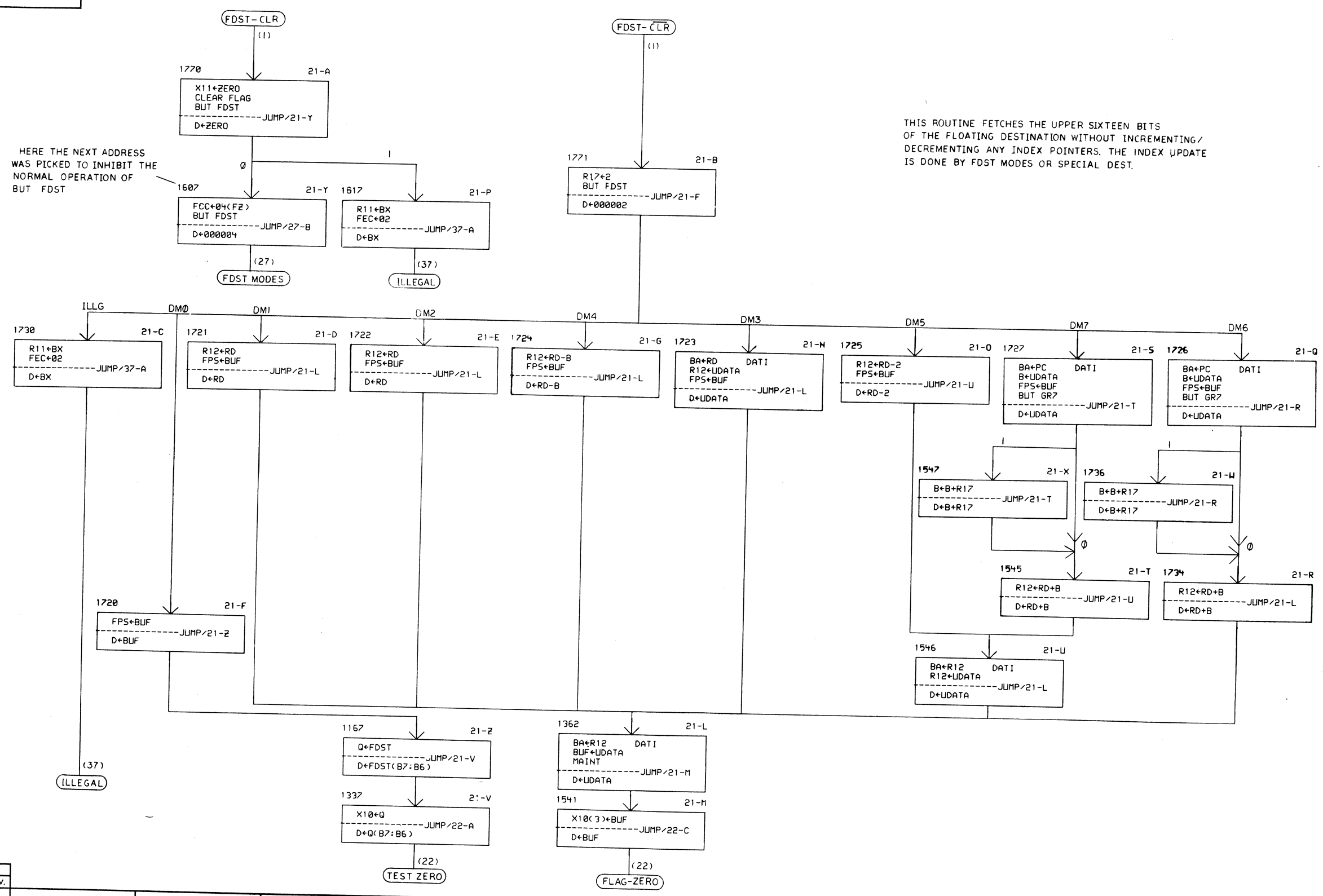

REVISIONS		
CHK	CHANGE NO.	REV.

TITLE	SIZE	CODE	NUMBER	REV.
FPII-A FLOWS (21)	D	FD	FPII-A-2	
SCALE —	SHEET 24 OF 40	DIST.		

63

"THIS DRAWING AND SPECIFICATIONS, HEREIN, ARE THE PROPERTY OF DIGITAL EQUIPMENT CORPORATION AND SHALL NOT BE REPRODUCED OR COPIED OR USED IN WHOLE OR IN PART AS THE BASIS FOR THE MANUFACTURE OR SALE OF ITEMS WITHOUT WRITTEN PERMISSION. COPYRIGHT © 1977 DIGITAL EQUIPMENT CORPORATION"

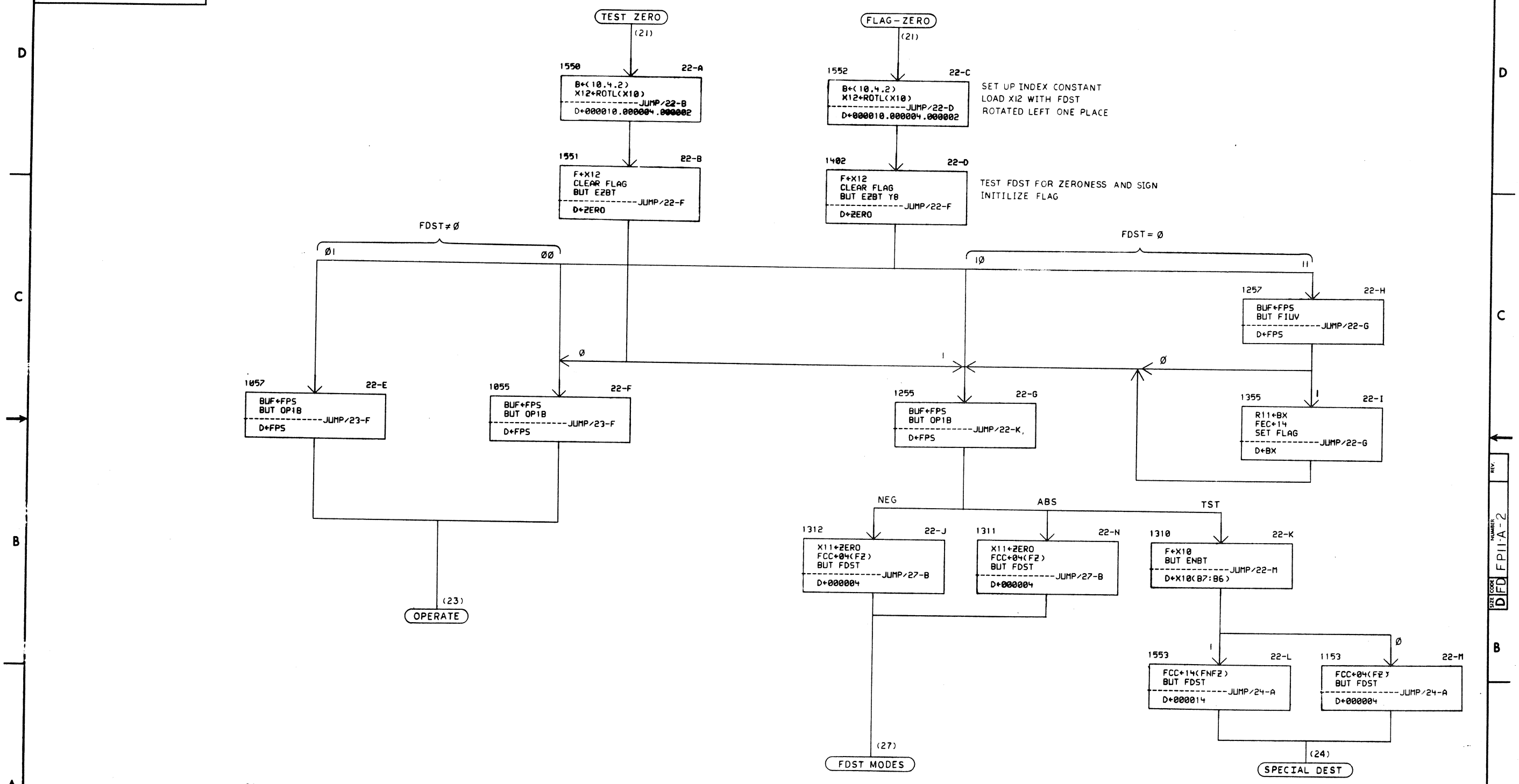

REVISIONS		
CHK	CHANGE NO.	REV.

TITLE	SIZE	CODE	NUMBER	REV.
FPII A FLOWS (22)	D	FD	FPII-A-2	
SCALE —	SHEET 25 OF 40	DIST.		

64

"THIS DRAWING AND SPECIFICATIONS, HEREIN, ARE THE PROPERTY OF DIGITAL EQUIPMENT CORPORATION AND SHALL NOT BE REPRODUCED OR COPIED OR USED IN WHOLE OR IN PART AS THE BASIS FOR THE MANUFACTURE OR SALE OF ITEMS WITHOUT WRITTEN PERMISSION.
COPYRIGHT © 1977 DIGITAL EQUIPMENT CORPORATION"

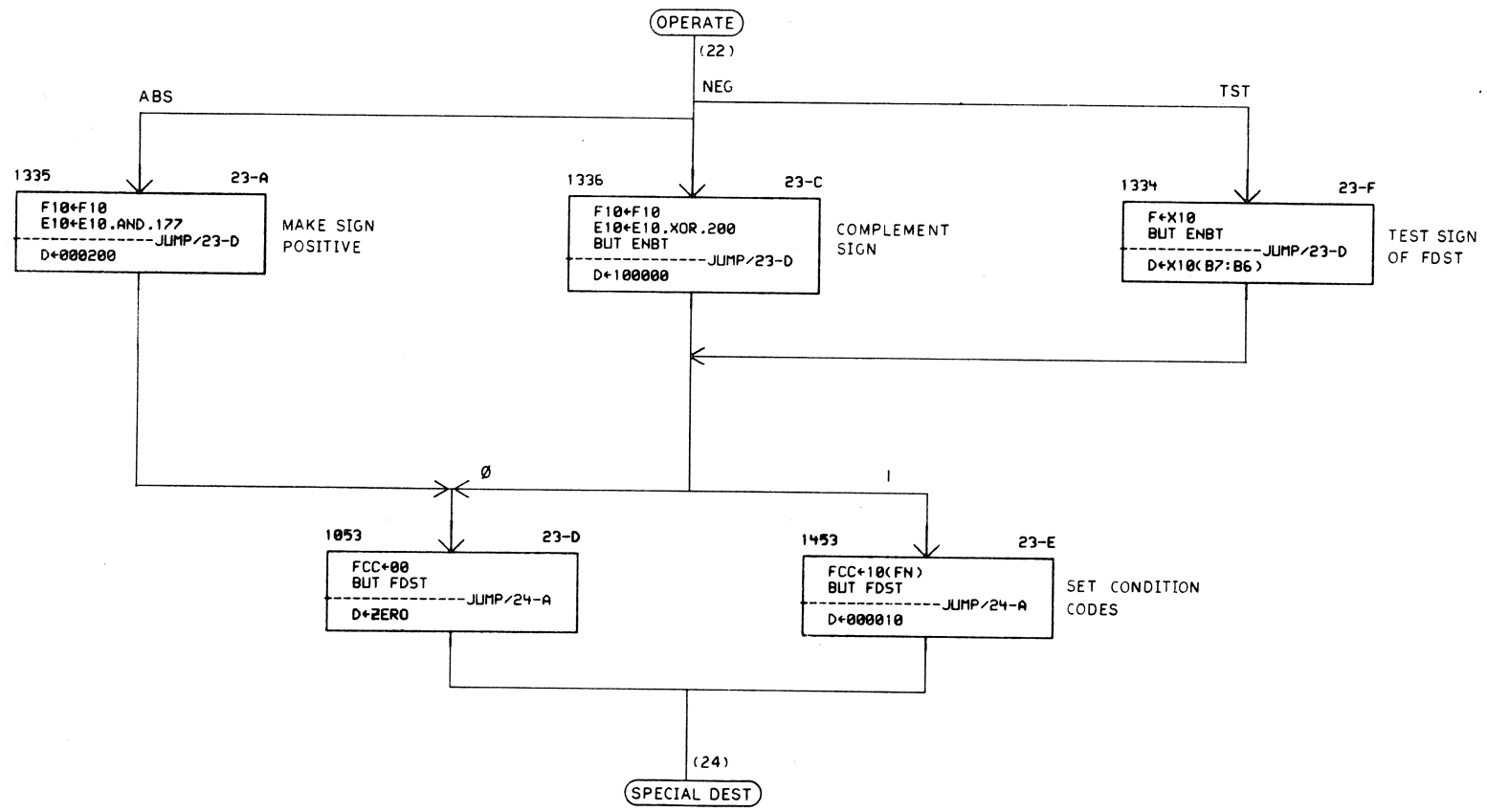

REVISIONS		
CHK	CHANGE NO.	REV.

TITLE	SIZE	CODE	NUMBER	REV.
FPII-A FLOWS (23)	D	FD	FPII-A-2	
SCALE —	SHEET 26 OF 40	DIST.		

DEC FORM NO. DRD 138

MANUFACTURE FILES

65

"THIS DRAWING AND SPECIFICATIONS, HEREIN, ARE THE PROPERTY OF DIGITAL EQUIPMENT CORPORATION AND SHALL NOT BE REPRODUCED OR COPIED OR USED IN WHOLE OR IN PART AS THE BASIS FOR THE MANUFACTURE OR SALE OF ITEMS WITHOUT WRITTEN PERMISSION.
COPYRIGHT © 1977 DIGITAL EQUIPMENT CORPORATION"

THIS ROUTINE UPDATES THE INDEX REGISTERS AND THEN LOADS THE UPPER SIXTEEN BITS OF THE FDST INTO MEMORY OR AN ACCUMULATOR AS THE CASE MAY BE. NOTE THAT THE TEST INSTRUCTION AVOIDS DOING A MEMORY CYCLE SINCE IT IS UNNECESSARY AND UNLAWFUL

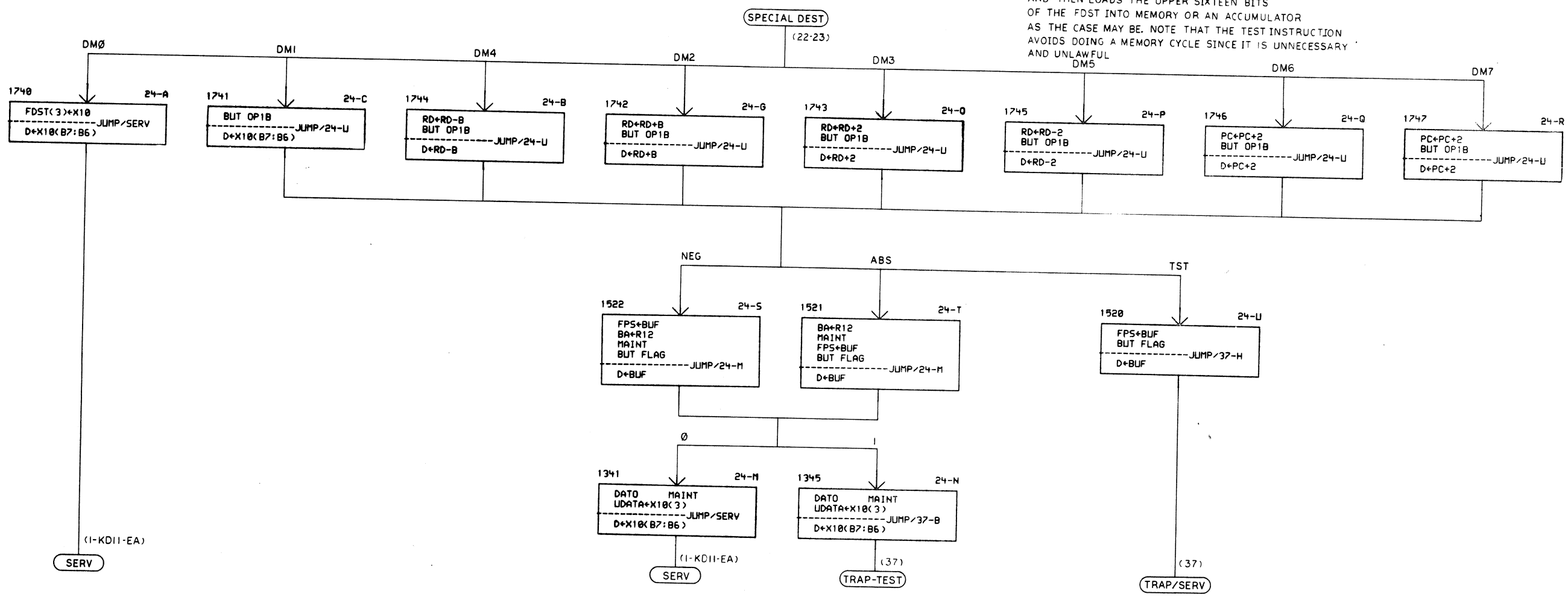

REVISIONS		
CHK	CHANGE NO.	REV.

TITLE	SIZE	CODE	NUMBER	REV.
FPII-A FLOWS (24)	D	FD	FPII-A-2	
SCALE —	SHEET 27 OF 40	DIST.		

DEC FORM NO. BRD 130

"THIS DRAWING AND SPECIFICATIONS, HEREIN, ARE THE PROPERTY OF DIGITAL EQUIPMENT CORPORATION AND SHALL NOT BE REPRODUCED OR COPIED OR USED IN WHOLE OR IN PART AS THE BASIS FOR THE MANUFACTURE OR SALE OF ITEMS WITHOUT WRITTEN PERMISSION. COPYRIGHT © 1977 DIGITAL EQUIPMENT CORPORATION"

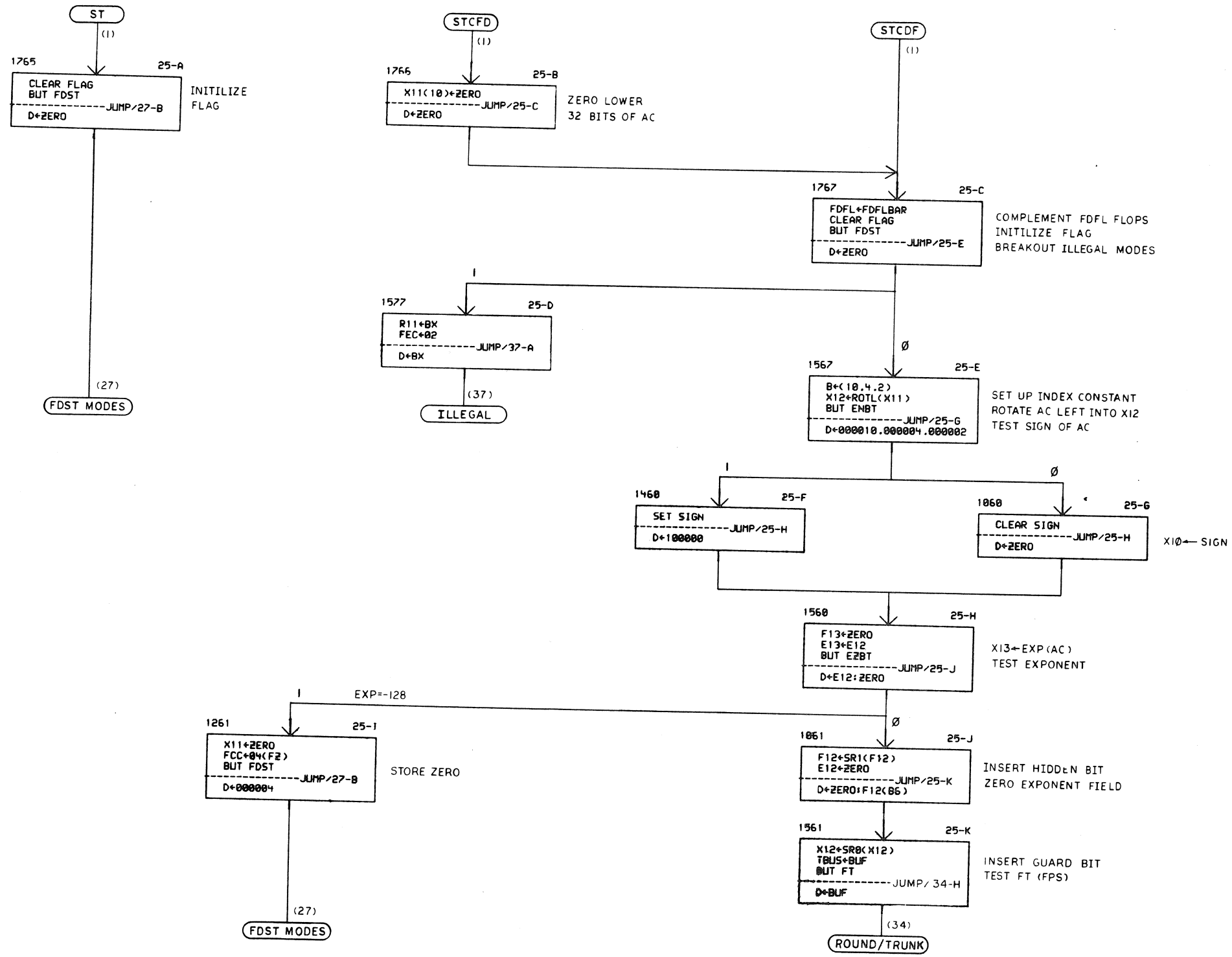

REVISIONS		
CHK	CHANGE NO.	REV.

TITLE	SIZE	CODE	NUMBER	REV.
FPII-A FLOWS (25)	D	FD	FPII-A-2	
SCALE —	SHEET 28 OF 40	DIST.		

67

"THIS DRAWING AND SPECIFICATIONS, HEREIN, ARE THE PROPERTY OF DIGITAL EQUIPMENT CORPORATION AND SHALL NOT BE REPRODUCED OR COPIED OR USED IN WHOLE OR IN PART AS THE BASIS FOR THE MANUFACTURE OR SALE OF ITEMS WITHOUT WRITTEN PERMISSION.
COPYRIGHT © 1977 DIGITAL EQUIPMENT CORPORATION"

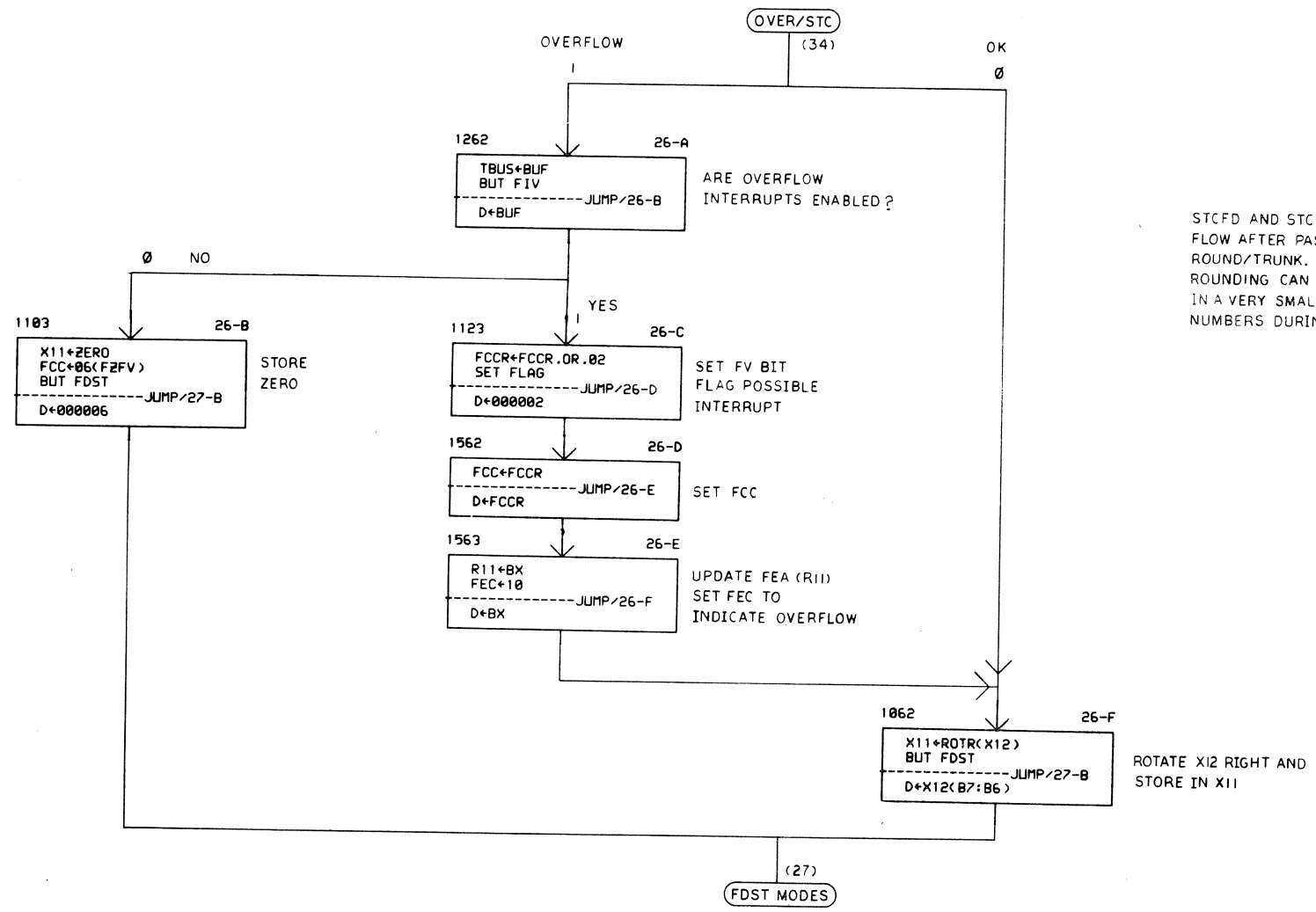

STCFD AND STCDF ENTER THIS FLOW AFTER PASSING THROUGH ROUND/TRUNK. THE PROCESS OF ROUNDING CAN CAUSE AN OVERFLOW IN A VERY SMALL CLASS OF VERY LARGE NUMBERS DURING STCDF (PROBABILITY $= \frac{1}{\infty}$)

REVISIONS		
CHK	CHANGE NO.	REV.

TITLE	SIZE	CODE	NUMBER	REV.
FPII-A FLOWS (26)	D	FD	FPII-A-2	
SCALE — / —	SHEET 29 OF 40	DIST.		

68