"THE MATERIAL HEREIN IS FOR INFORMATION PURPOSES ONLY AND IS SUBJECT TO CHANGE WITHOUT NOTICE. DIGITAL EQUIPMENT CORPORATION ASSUMES NO RESPONSIBILITY FOR ANY ERRORS WHICH MAY APPEAR HEREIN."

FIELD MAINTENANCE PRINT SET

"THIS DRAWING AND SPECIFICATIONS, HEREIN, ARE THE PROPERTY OF DIGITAL EQUIPMENT CORPORATION AND SHALL NOT BE REPRODUCED OR COPIED OR USED IN WHOLE OR IN PART AS THE BASIS FOR THE MANUFACTURE OR SALE OF ITEMS WITHOUT WRITTEN PERMISSION. COPYRIGHT © 1977 DIGITAL EQUIPMENT CORPORATION."

TABLE OF CONTENTS

FIELD MAINTENANCE PRINT SET		
RL01 DISK DRIVE ASSEMBLY	B-TC-RL01-0-1	
RL01 SYSTEM CABLING	E-UA-RL01-0-0	(Sheets 1,2 & 3 Only)
	D-IC-RL01-0-3	(Sheet 2 Only)
POWER PANEL ASSEMBLY	D-AD-7012130-0-0	
READ/WRITE BOARD	D-UA-5413536-0-0	(Sheet 1 only)
	B-PL-5413536-0-0	
	D-CS-5413536-0-1	
FRONT PANEL	D-UA-5411846-0-0	(Sheet 1 only)
	B-PL-5411846-0-0	
	D-CS-5411846-0-1	
AC SERVO	D-UA-5411848-0-0	(Sheet 1 only)
	K-PL-5411848-0-DBP	
	D-CS-5411848-0-1	
DC SERVO AND POWER BOARD	D-UA-5413534-0-0	(Sheet 1 only)
	K-PL-5413534-0-DBP	
	D-CS-5413534-0-1	
DRIVE LOGIC	D-UA-5414025-0-0	(Sheet 1 only)
	K-PL-5414025-0-DBP	
	D-CS-5414025-0-1	

UNIT VARIATIONS COVERED BY THIS PRINT SET
RL01-A

RLØI

Field Maintenance Print Set

Digital Equipment Corporation

PRINT SET NO. MPØØ347

REV. F

SIZE B | CODE TC | NUMBER RLØI-Ø-I

REV.	CHG. NO.	DATE
D	REDRAWN # PER ECO RLØI-CXØ36 M.BROWN	W.C.M. 26 JUL 79
E	RLØI-CXØ39 M.ZARICH	RPM 11 OCT 79
F	RLØI-CXØ4Ø M.ZARICH	RPM 22 OCT 79

REVISIONS

USED ON OPTION/MODEL

SHEET 1 OF 1

DRN. G.SCHNEIDER	DATE 20-OCT-77	TITLE: RL01 DISK DRIVE
CHK'D G.RICHENBERG	DATE 20-OCT-77	
PROJ. ENG. P.ARNOLD	DATE 20-OCT-77	SIZE B · CODE TC · NUMBER RLØI-Ø-I · REV. F
FIELD SERV. J. REED	DATE 21-OCT-77	DIST.

digital

DRB 124

NOTES

1. LOWER HEAD (ITEM 65) SHALL BE POSITIONED REARWARDS AGAINST PIN IN CARRIAGE
2. ALL SCREWS TO BE TIGHTENED AS FOLLOWS
   4-40 [illegible]
   6-32
   8-32
   10-32 [illegible]
3. DRIVE BELT TENSION 10.0 ± 1.0 LBS
4. 4-40 HEAD MTG BOLTS TO BE TIGHTENED TO 5.0 ± 0.5 IN LBS.
5. TORQUE 8-32 SELF TAPPING HARDWARE (ITEM 70) TO 16-18 IN-LBS.
6. BLOWER HOUSING SECURING HARDWARE TO BE REMOVED BEFORE OPERATING UNIT.
7. DIMENSION APPLIES TO HIGHEST OR LOWEST POINT ALONG BRUSH ARM OR BLOCK OF BRUSH.
8. THREE (3) TOOLING POINTS, SEE DRAWING 7416846 OR 7415237.
9. DIMENSION HAS TO BE WITHIN .004 AT BOTH EXTREMES OF CARRIAGE TRAVEL.

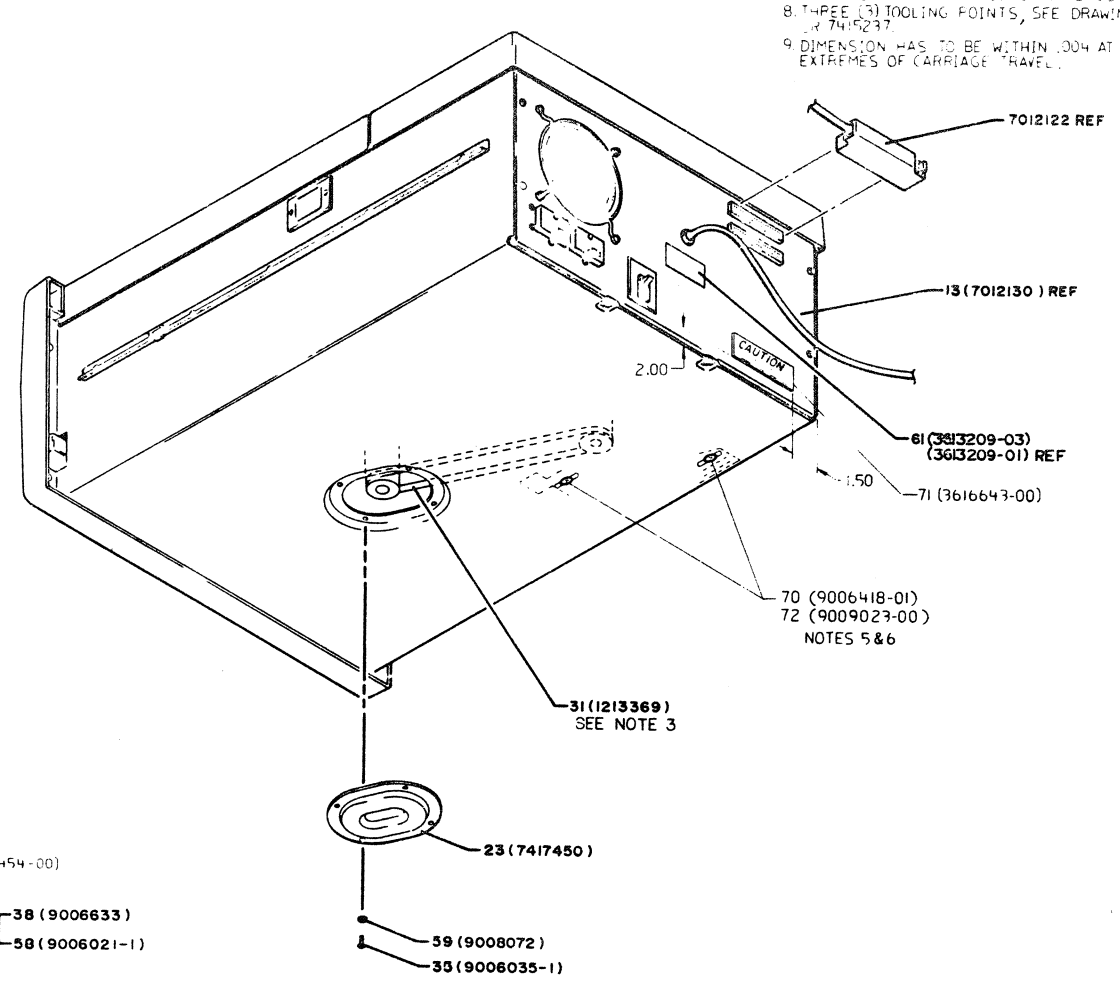

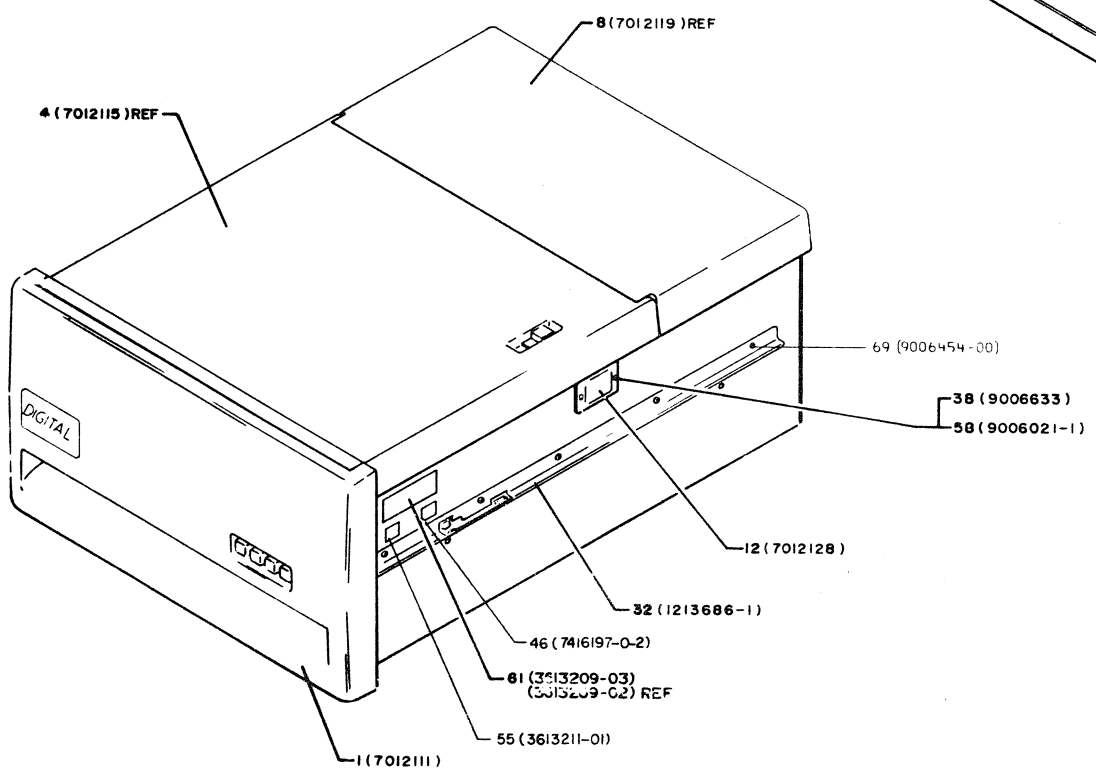

CAUTION: OFF SHEET PARTS LIST EXISTS.
SEE K-PL-RL01-0-DBP (Z0499)

ITEM		DESCRIPTION	DWG PART NO	ITEM NO
A	B	[illegible]		
C	C	[illegible]		
D	D	[illegible]		
E	E	[illegible]		
F	F	[illegible]		
H	H	RL01-C-204		
J	J	RL01-C-220		
K	K	RL01-C-221		
L	L	RL01-C-222		
M	M	[illegible]		
N	N	RL01-C-034		
P	P	RL01-C-033		
R	R	RL01-C-035		
S	S	RL01-C-037		
T	T	RL01-C-039		
U	U	RL01-C-040		
V	V	RL01-C-041		

TITLE
RL01 DISK DRIVE ASSEMBLY

NUMBER
RL01-0-0

REV
V

3

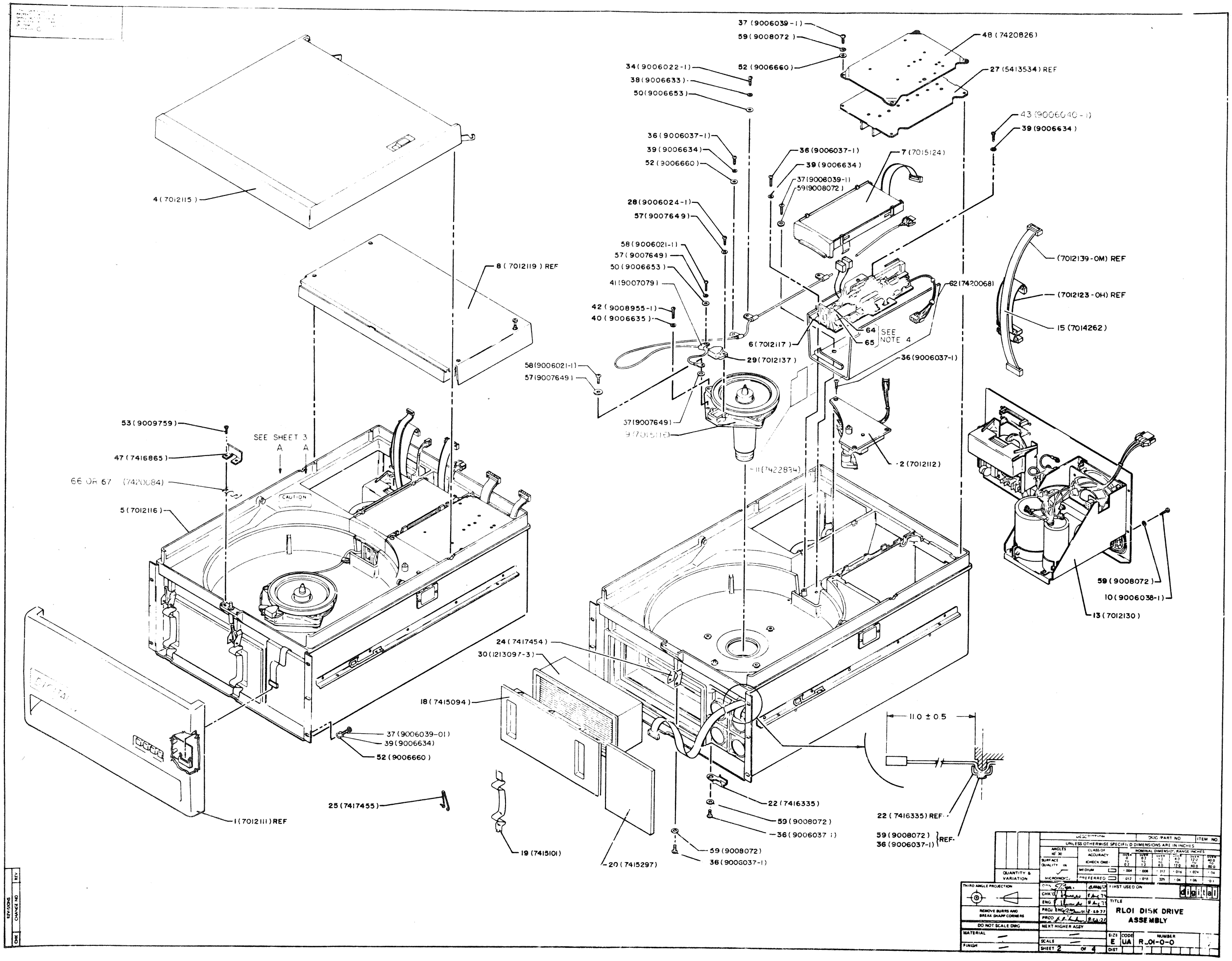
37 (9006039-1)
59 (9008072)
48 (7420826)
34 (9006022-1)
52 (9006660)
27 (5413534) REF
38 (9006633)
50 (9006653)
43 (9006040-1)
39 (9006634)
36 (9006037-1)
39 (9006634)
52 (9006660)
36 (9006037-1)
39 (9006634)
37 (9006039-1)
59 (9008072)
7 (7015124)
4 (7012115)
28 (9006024-1)
57 (9007649)
58 (9006021-1)
57 (9007649)
50 (9006653)
41 (9007079)
8 (7012119) REF
(7012139-0M) REF
62 (7420068)
(7012123-0H) REF
15 (7014262)
42 (9008955-1)
40 (9006635)
64
65
SEE NOTE 4
6 (7012117)
29 (7012137)
36 (9006037-1)
58 (9006021-1)
57 (9007649)
53 (9009759)
SEE SHEET 3
A A
47 (7416865)
37 (9007649)
9 (7015113)
11 (7422834)
2 (7012112)
66 OR 67 (7420084)
CAUTION
5 (7012116)
59 (9008072)
10 (9006038-1)
13 (7012130)
24 (7417454)
30 (1213097-3)
18 (7415094)
110 ± 0.5
37 (9006039-01)
39 (9006634)
52 (9006660)
22 (7416335)
59 (9008072)
36 (9006037-1)
22 (7416335) REF
59 (9008072)
36 (9006037-1)
REF
25 (7417455)
1 (7012111) REF
19 (7415101)
20 (7415297)
59 (9008072)
36 (9006037-1)
REVISIONS
ZONE
CHANGE NO
BY
DESCRIPTION
DWG PART NO
ITEM NO
UNLESS OTHERWISE SPECIFIED DIMENSIONS ARE IN INCHES
ANGLES ±0°30'
SURFACE QUALITY
CLASS OF ACCURACY
(CHECK ONE)
MEDIUM
PREFERRED
NOMINAL DIMENSION RANGE INCHES
QUANTITY & VARIATION
THIRD ANGLE PROJECTION
REMOVE BURRS AND BREAK SHARP CORNERS
DO NOT SCALE DWG
MATERIAL
FINISH
DRN
CHK'D
ENG
PROJ ENG
PROD
NEXT HIGHER ASSY
SCALE
SHEET 2 OF 4
FIRST USED ON
digital
TITLE
RL01 DISK DRIVE ASSEMBLY
SIZE E
CODE UA
NUMBER R_01-0-0
DIST

4

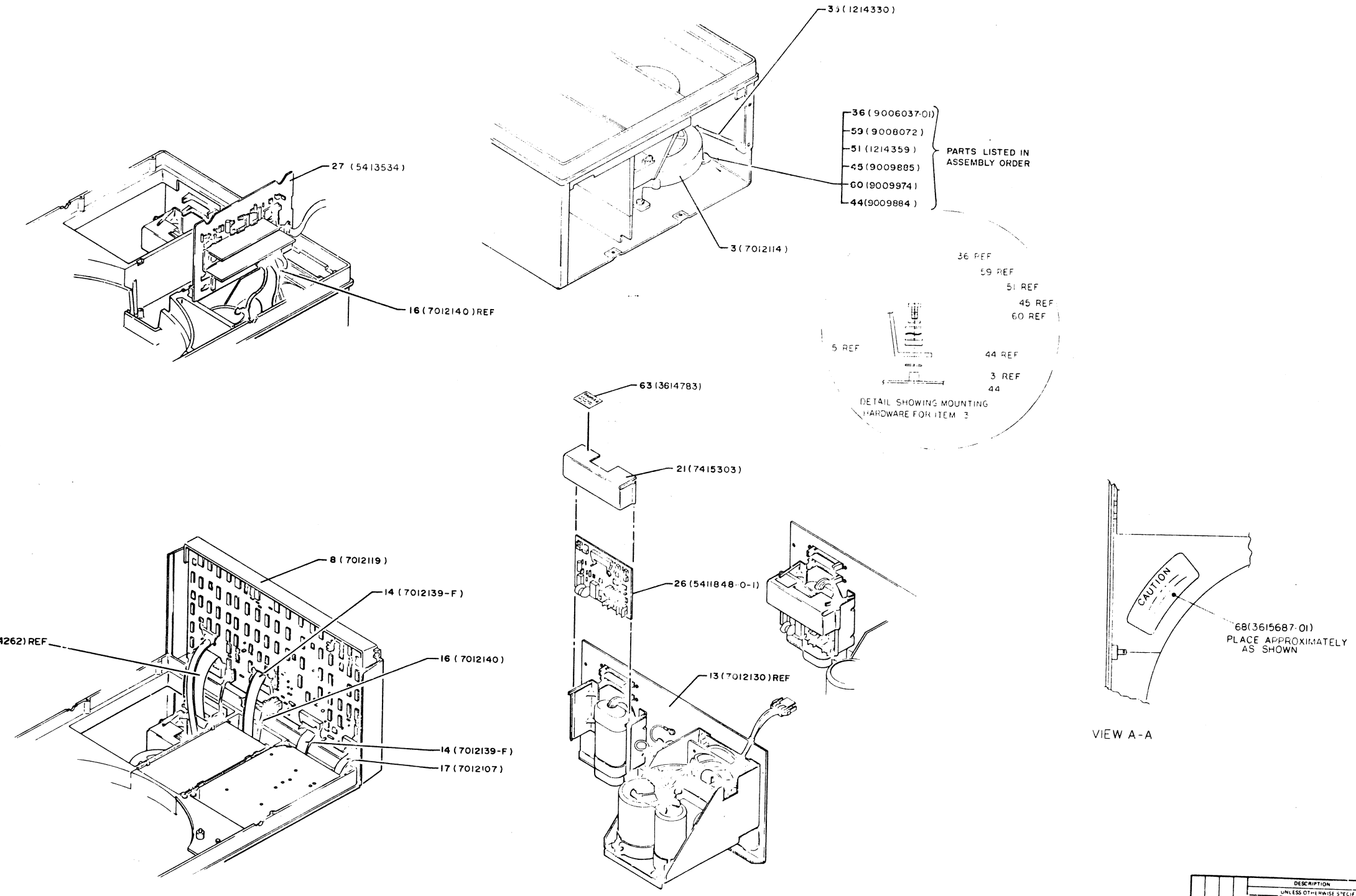

REVISIONS		
CHG	CHANGE NO	REV

DESCRIPTION		DWG (PART NO)	ITEM NO
UNLESS OTHERWISE SPECIFIED DIMENSIONS ARE IN INCHES			
ANGLES ±0°30'	SURFACE ACCURACY (CHECK ONE)		
SURFACE QUALITY ±N	MEDIUM		
MFG NO INCHES	PREFERRED		
QUANTITY & VARIATION			

THIRD ANGLE PROJECTION

REMOVE BURRS AND SHARP EDGES

DRN
CHK'D
ENG
PROJ ENG
PROJ MGR
NEXT HIGHER ASSY

FIRST USED ON

digital

TITLE
RLOI DISK DRIVE ASSEMBLY

SCALE
SHEET 1 OF 4

SIZE E | CODE UA | NUMBER RLOI-0-0 | REV

"THIS DRAWING AND SPECIFICATIONS, HEREIN, ARE THE PROPERTY OF DIGITAL EQUIPMENT CORPORATION AND SHALL NOT BE REPRODUCED OR COPIED OR USED IN WHOLE OR IN PART AS THE BASIS FOR THE MANUFACTURE OR SALE OF ITEMS WITHOUT WRITTEN PERMISSION.
COPYRIGHT © 1978 , DIGITAL EQUIPMENT CORPORATION"

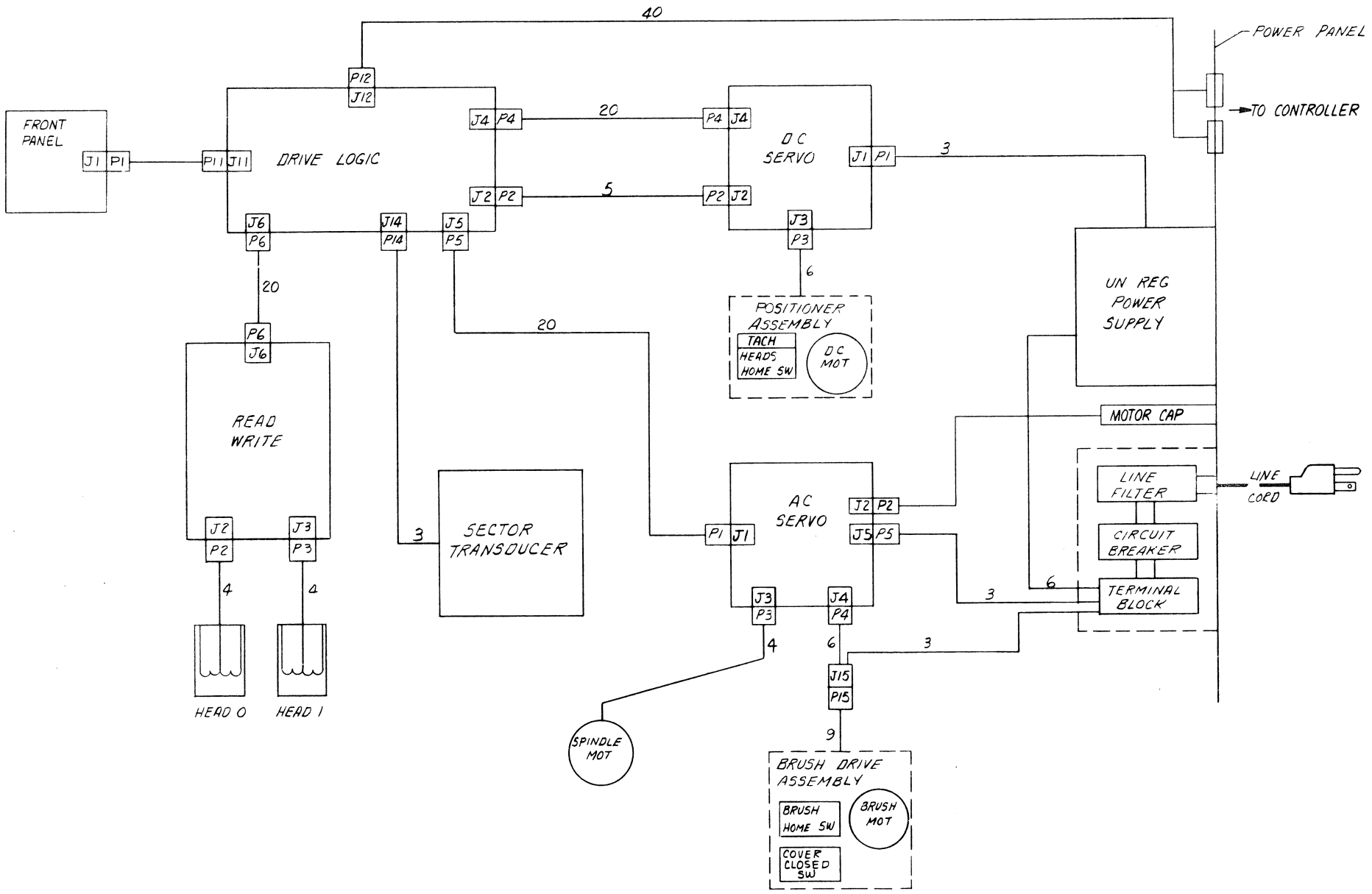

DESCRIPTION	DWG./PART NO.	ITEM NO.

UNLESS OTHERWISE SPECIFIED DIMENSIONS ARE IN INCHES

ANGLES ±0° 30'	CLASS OF ACCURACY (CHECK ONE)	NOMINAL DIMENSION RANGE INCHES					
SURFACE QUALITY IN MICROINCHES		OVER 0 TO 0.2	OVER 0.2 TO 1.2	OVER 1.2 TO 4.0	OVER 4.0 TO 12.0	OVER 12.0 TO 40.0	OVER 40.0 TO 80.0
	MEDIUM ☐	±.004	±.008	±.012	±.016	±.024	±.04
	PREFERRED ☐	±.012	±.016	±.025	±.04	±.063	±0.1

QUANTITY & VARIATION

THIRD ANGLE PROJECTION

REMOVE BURRS AND BREAK SHARP CORNERS

DO NOT SCALE DWG

MATERIAL

FINISH

DRN. R. Huff 9-27-77
CHK'D
ENG. 9-27-77
PROJ. ENG. 10/11/77
PROD. 10/11/77

NEXT HIGHER ASSY. B-DD-RLØ1-Ø

SCALE

SHEET 2 OF 2

FIRST USED ON RLØI

digital

TITLE
RLØI
SYSTEM CABLING

SIZE	CODE	NUMBER	REV.
D	IC	RLØI-Ø-3	C

DIST.

REVISIONS

CHK	CHANGE NO.	REV.

DEC FORM NO 2010 1.00-C

SIZE D CODE IC NUMBER RLØI-Ø-3 REV C

6

NOTES:

1. INT TOOTH LOCK WASHERS (ITEM 23) ARE USED OVER AND UNDER GROUND TERMINALS.
2. ORIENT TERMINALS AS SHOWN.

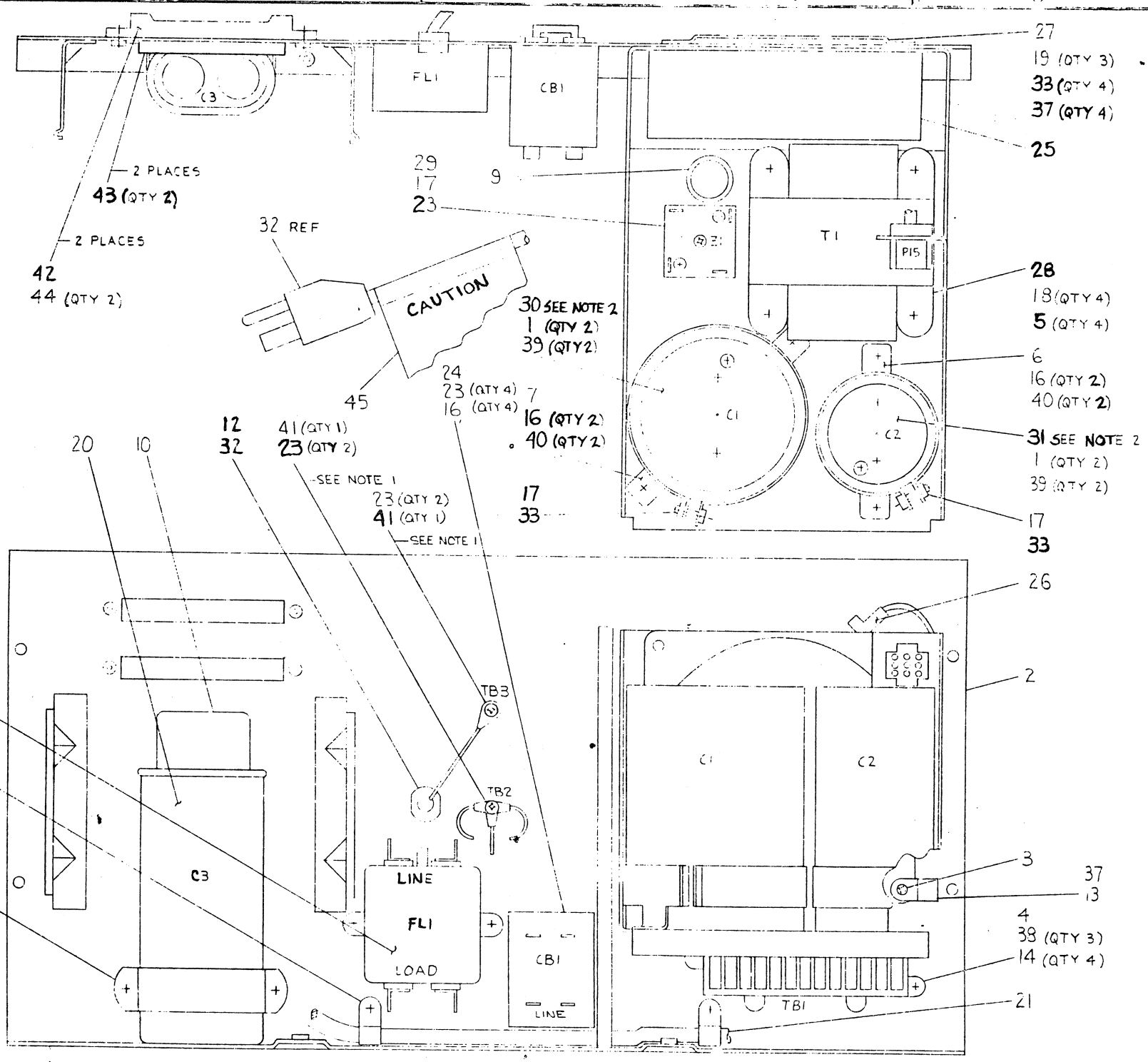

CAUTION: OFF SHEET PARTS LIST EXISTS.
SEE K-PL-7012130-0-DBP (ZØ849)

| | | |

THIS DRAWING AND SPECIFICATIONS HEREIN ARE THE PROPERTY OF DIGITAL EQUIPMENT CORPORATION AND SHALL NOT BE REPRODUCED OR COPIED OR USED IN WHOLE OR IN PART AS THE BASIS FOR THE MANUFACTURE OR SALE OF IT WITHOUT WRITTEN PERMISSION. COPYRIGHT © 1970 - DIGITAL EQUIPMENT CORPORATION

NOTES:

1. INPUT VOLTAGE 50 OR 60 HZ
   90 – 110, 105 – 128 VAC
   180 – 220, 210 – 256 VAC
2. OUTPUT VOLTAGE ± 11.5 VDC MIN AT MIN POINT OF THE RIPPLE. 18 VDC MAX AT HIGH LINE. (MAX OF 25 VDC AT HIGH LINE NO LOAD).
3. OUTPUT CURRENT: POSITIVE OUTPUT
   2.5 AMP CONTINUOUS
   3.5 AMP PULSE "25 MS"
   NEGATIVE OUTPUT
   .25 AMP CONTINUOUS
   3.5 AMP PULSE "25 MS"
   PULSE CURRENT ON ALTERNATE OUTPUT AT A 65 MS OUT CYCLE.
4. OUTPUT RIPPLE AT 110 VOLTS
   A. NO LOAD 100 mV P/P
   B. +2.5 A 600 mV P/P
      -.25 A 300 mV P/P
   C. +2.5 A 600 mV P/P
      -3.75 A 1.5 V DURING PULSE
   RIPPLE AT 90 V RMS
   +2.5 A 500 mV
   -3.75 A 2V
   +6 A 900 mV
   -.25 A 400 mV
5. HIGH POT TEST PER UL 478
   CONNECT BOTH AC LEADS TO THE POSITIVE TERMINAL OF THE SUPPLY AND GRN WIRE GROUND TO THE NEGATIVE TERMINAL OF THE SUPPLY. CLOSE CIRCUIT BREAKER AND INCREASE VOLTAGE TO 1750 VDC, ANY CURRENT INDICATES FAILURE.

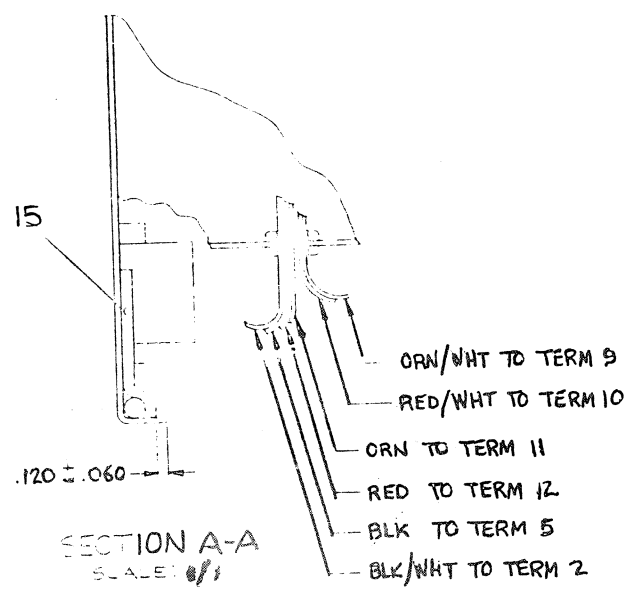

SECTION A-A
SCALE: 8/1

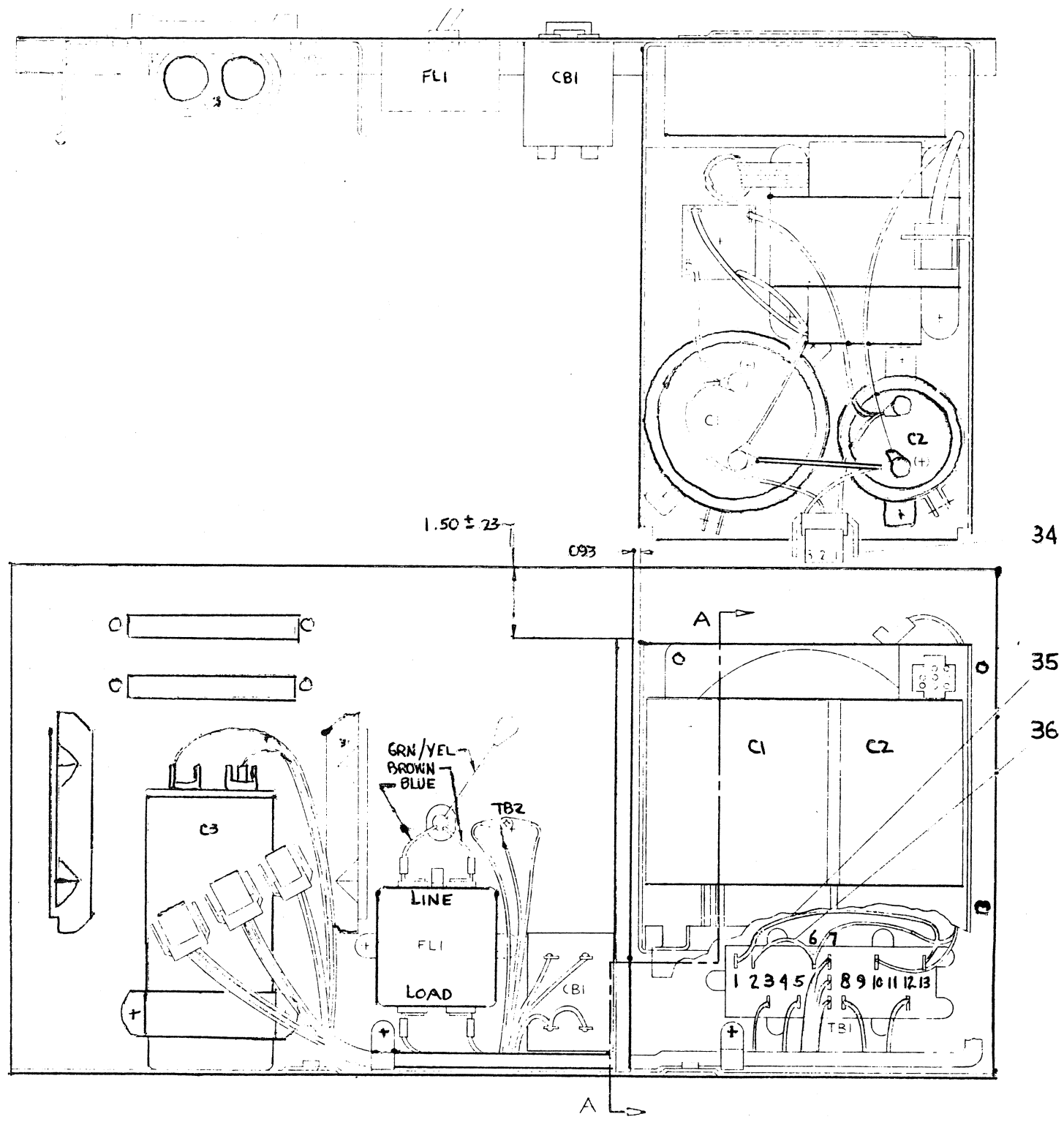

REVISIONS		
CHK	CHANGE NO.	REV.

TITLE: POWER PANEL ASSY

SIZE: D | CODE: AD | NUMBER: 7012130-0-0

SCALE: 1/1 | SHEET 2 OF 3 | DIST.

8

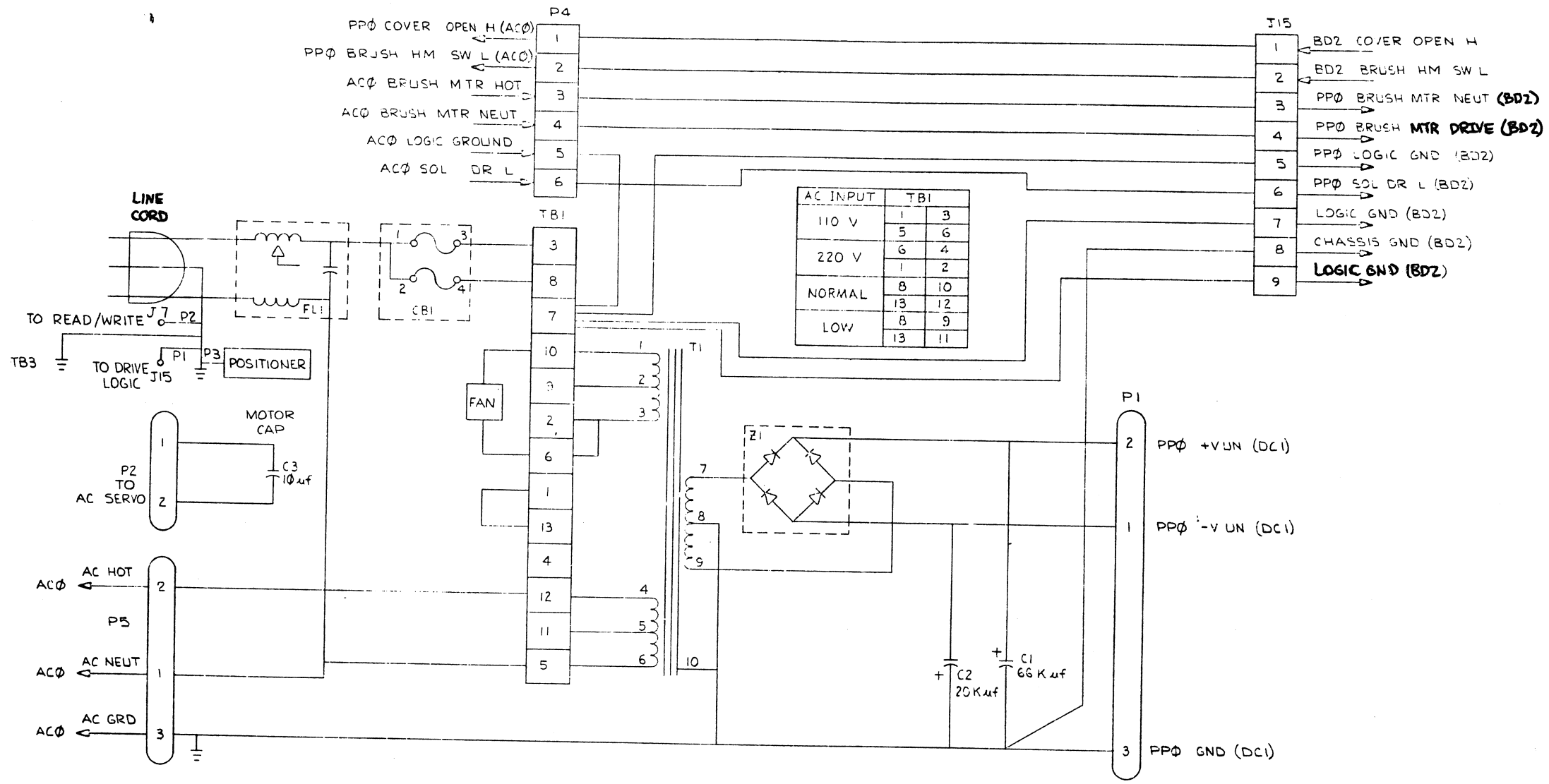

AC INPUT	TB1	
110 V	1	3
	5	6
220 V	6	4
	1	2
NORMAL	8	10
	13	12
LOW	8	9
	13	11

TITLE	SIZE	CODE	NUMBER	REV.
POWER PANEL ASSY (PPO)	D	AD	7012130-0-0	R

9

NOTES:

CHK	CHANGE	NO	REV

SIGNATURES	DATE
DRN.	
CHK'D.	
ENG.	
PROJ.ENG.	
PROD.	

P.C. DESIGN DATA BASE REV.BL

ETCH REV.5

d i g i t a l

TITLE RL02 READ/WRITE BOARD

SCALE 2:1 SHT. 1 OF 3

SIZE D 2 NUMBER 5413536-0-0 REV A

NEXT HIGHER ASSY. 3-55-5413536-0

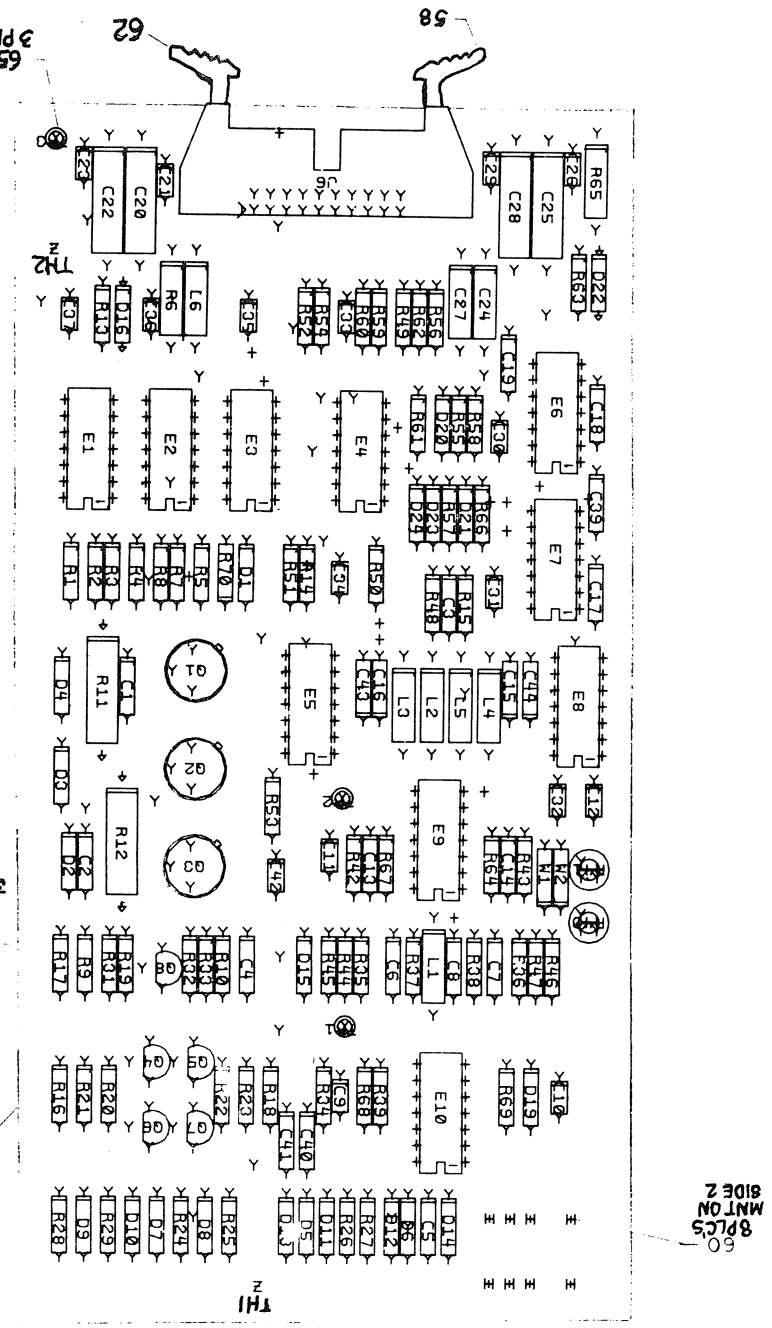

THIS DRAWING AND SPECIFICATIONS, HERSIN, THE PROPERTY OF DIGITAL EQUIPMENT CORPORATION AND SHALL NOT BE REPRODUCED OR COPIED OR USED IN WHOLE OR IN PART AS THE BASIS FOR THE MANUFACTURE OR SALE OF ITEMS WITHOUT WRITTEN PERMISSION.
COPYRIGHT © 1979 DIGITAL EQUIPMENT CORPORATION

SIZE	CODE	NUMBER	REV
D	U4	5413536-0-0	C