"THE MATERIAL HEREIN IS FOR INFORMATION PURPOSES ONLY AND IS SUBJECT TO CHANGE WITHOUT NOTICE. DIGITAL EQUIPMENT CORPORATION ASSUMES NO RESPONSIBILITY FOR ANY ERRORS WHICH MAY APPEAR HEREIN."

FIELD MAINTENANCE PRINT SET

"THIS DRAWING AND SPECIFICATIONS, HEREIN, ARE THE PROPERTY OF DIGITAL EQUIPMENT CORPORATION AND SHALL NOT BE REPRODUCED OR COPIED OR USED IN WHOLE OR IN PART AS THE BASIS FOR THE MANUFACTURE OR SALE OF ITEMS WITHOUT WRITTEN PERMISSION. COPYRIGHT © 1981 DIGITAL EQUIPMENT CORPORATION."

TABLE OF CONTENTS

B-TC-RLV12-Ø-1	RLV12 FIELD MAINTENANCE PRINT SET
B-DD-RLV12-Ø	DRAWING DIRECTORY (RLV12)
E-UA-RLV12-Ø-Ø	DISK CONTROLLER (RLV12)
K-PL-RLV12-Ø-DBP	DISK CONTROLLER ASSY (RLV12) (PL)
D-UA-M8Ø61-Ø-Ø	RLV12
K-PL-M8Ø61-Ø-DBP	PARTS LIST, M8Ø61
D-CS-M8Ø61-Ø-RLV1	BUS PROTOCOL
D-CS-M8Ø61-Ø-RLV2	TS DAL BUS
D-CS-M8Ø61-Ø-RLV3	CSR
D-CS-M8Ø61-Ø-RLV4	DMA AND INTERRUPT
D-CS-M8Ø61-Ø-RLV5	FIFO
D-CS-M8Ø61-Ø-RLV6	FIFO BUFFER REGISTER
D-CS-M8Ø61-Ø-RLV7	MUX'S & CRC
D-CS-M8Ø61-Ø-RLV8	CONTROL STORE SEQUENCER
D-CS-M8Ø61-Ø-RLV9	RLV12 CONTROL SIGNALS
D-CS-M8Ø61-Ø-RLVA	WRITE ENCODE CIRCUIT
D-CS-M8Ø61-Ø-RLVB	READ CIRCUIT
D-CS-M8Ø61-Ø-RLVC	CURRENT PUMP/VCO
D-CS-M8Ø61-Ø-RLVD	-5V CHARGE PUMP
D-CS-M8Ø61-Ø-RLVE	DRIVE BUS INTERFACE
D-CS-M8Ø61-Ø-RLVF	CAPS
D-UA-BC8ØM-Ø-Ø	BC8ØM I/O CABLE

UNIT VARIATIONS COVERED BY THIS PRINT SET
RLV12-ØØ

Field Maintenance Print Set

Digital Equipment Corporation

PRINT SET ORDER NO.
MPØ1282

REV. B | NUMBER RLV12-Ø-1 | CODE TC | SIZE B

REVISIONS			
REV.	B		
CHG. NO.	RLV12-MR1	M. Thomas	
DATE	3-82	R. FITCH	Robert Fitch 15 MAR 82

NR

DRB 124

USED ON OPTION/MODEL	
RLV12	

SHEET 1 OF 1

DRN.	Tim Sicard	DATE	4 MAR 81
CHK'D		DATE	
PROJ. ENG.	Robert Fitch	DATE	14 SEP 81
FIELD SERV.		DATE	14 JUL 81

digital

TITLE: FIELD MAINTENANCE PRINT SET (RLV12)

SIZE	CODE	NUMBER	REV.
B	TC	RLV12-Ø-1	B

DIST.

MR

"THE MATERIAL HEREIN IS FOR INFORMATION PURPOSES ONLY AND IS SUBJECT TO CHANGE WITHOUT NOTICE. DIGITAL EQUIPMENT CORPORATION ASSUMES NO RESPONSIBILITY FOR ANY ERRORS WHICH MAY APPEAR HEREIN."

DRAWING DIRECTORY

"THIS DRAWING AND SPECIFICATIONS, HEREIN, ARE THE PROPERTY OF DIGITAL EQUIPMENT CORPORATION AND SHALL NOT BE REPRODUCED OR COPIED OR USED IN WHOLE OR IN PART AS THE BASIS FOR THE MANUFACTURE OR SALE OF ITEMS WITHOUT WRITTEN PERMISSION. COPYRIGHT © 1981 DIGITAL EQUIPMENT CORPORATION.

FOR FIELD MAINTENANCE PRINT SET
REFER TO B-TC-RLV12-Ø-1

UNIT VARIATIONS

VAR	TITLE
RLV12-ØØ	DISK CONTROLLER ASSY (RLV12)
	W/O DISK DRIVE

REVISIONS

CHK	CHANGE NO.	REV.
	RLV12-MR001	B

M. Norman 24 Mar 82
R. FITCH
Robert Fitch 15 APR 82

USED ON OPTION/MODEL
RLV12

		DATE
DRN.	Jim Sicard	4-MAR-81
CHK'D.	B. Hoy	15SEP81
PROJ. ENG.	Robert Fitch	14SEP81
PROD.	J. Toyo	14SEP81

TITLE: DRAWING DIRECTORY (RLV12)

digital

SIZE	CODE	NUMBER	REV
B	DD	RLV12-0	B

SHEET 1 OF 3

DIST.

DRB 106A

MR

"THIS DRAWING AND SPECIFICATIONS, HEREIN, ARE THE PROPERTY OF DIGITAL EQUIPMENT CORPORATION AND SHALL NOT BE REPRODUCED OR COPIED OR USED IN WHOLE OR IN PART AS THE BASIS FOR THE MANUFACTURE OR SALE OF ITEMS WITHOUT WRITTEN PERMISSION. 1981
COPYRIGHT © DIGITAL EQUIPMENT CORPORATION"

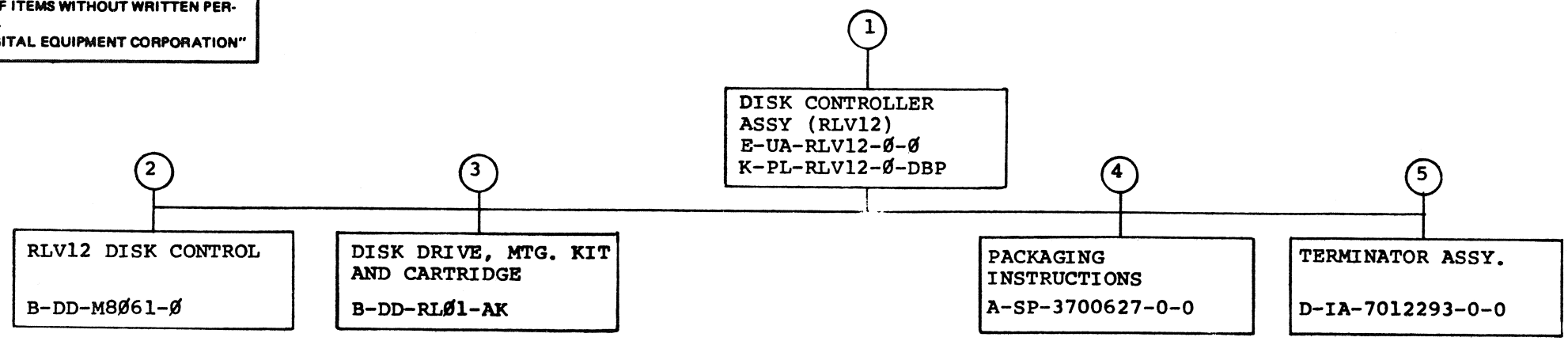

TITLE		SIZE	CODE	NUMBER	REV
DRAWING DIRECTORY (RLV12)	SHEET 2 OF 3	B	DD	RLV12-Ø	B

DRB 107

MR

FIND NO.	DRAWING NO.	DESCRIPTION	TYPE
1	MPØ1282	RLV12 PRINT SET (MP)	-
	B-TC-RLV12-Ø-1	RLV12 FIELD MAINTENANCE PRINT SET (TC)	-
	E-UA-RLV12-Ø-Ø	DISK CONTROLLER ASSY, RLV12	E/M
	K-PL-RLV12-Ø-DBP	DISK CONTROLLER ASSY, (RLV12) (PL)	-
	A-SP-RLV12-Ø-8	RLV12 ENGINEERING SPECIFICATION	-
	EK-RLV12-UG	RLV12 DISK CONTROLLER USERS GUIDE	-
	A-PL-7012938-0-0	UNIT SELECT PLUG KIT	M
	D-UA-BC8ØM-Ø-Ø	BC8ØM I/O CABLE	E/M
	A-SP-1212691-01	SW,PB CAP "1/READY" FOR 1212690-00	E/M
	A-SP-1212691-02	SW,PB CAP "2/READY" FOR 1212690-00	E/M
	A-SP-1212691-03	SW,PB CAP "3/READY" FOR 1212690-00	E/M
	B-PL-RLV12-Ø-SH	RLV12 SHIPPING LIST	E/M
2	B-DD-M8Ø61-Ø	RLV12 DISK CONTROL	E/M
3	B-DD-RLØ1-AK	DISK DRIVE, MTG. KIT AND CARTRIDE	E/M
4	A-SP-3700627-0-0	PACKAGING INSTRUCTION	-
	9906309-02	DIE CUT CARTON W/FOAM	-
5	D-IA-7012293-0-0	TERMINATOR ASSY	M
	A-DC-7416678-0-0	LOGO, TERMINATOR	M

TYPE: E ELECTRICAL
M MECHANICAL
E/M ELECTRO/MECHANICAL

digital

TITLE DRAWING DIRECTORY (RLV12)

SHEET 3 OF 3 | SIZE B | CODE DD | NUMBER RLV12-Ø | REV B

DRB 108A

MR

NOTES:

1. FOR SYSTEMS OPERATING AT 220 VAC REMOVE THE SCREWS FROM THE "VOLTAGE SELECTOR" COVER, WITHDRAW THE COVER AND RE-INSERT TURNED UPSIDE DOWN. AFTER INSERTION, "220V" MUST BE SHOWING THROUGH THE SMALL WINDOW. REPLACE THE TWO SCREWS, CUT OFF "110V" MALE PLUG AND REPLACE BY "220V" PLUG (ITEM 20). FOR COLOR CODE SEE DETAIL "H", SHEET 2. FOR 50HZ OPERATION ADD (ITEM 28) TO UNIT.

2. FOR SYSTEMS OPERATING WITH LOW LINE VOLTAGE, REMOVE TWO SCREWS FROM "VOLTAGE RANGE SELECTOR" COVER, WITHDRAW THE COVER AND RE-INSERT IT TURNED UPSIDE DOWN. AFTER THE INSERTION, "LOW" MUST BE SHOWING THROUGH THE SMALL WINDOW. REPLACE THE TWO SCREWS,SEE TABLE (FIRST SHEET,ZONE 6J).

3. CABLE CLAMP (ITEM 14) TO BE MOUNTED IN NEXT AVAILABLE HOLES(AS SHOWN IN DETAIL "C" SHT 2) ABOVE SHIPPING BRACKET (ITEM 7) AFTER SHIPPING BRACKET IS MOUNTED PER NOTE 4.

4. TO ATTACH SHIPPING BRACKET (ITEM 7) REMOVE TWO SCREWS AND TWO LOCKWASHERS FROM ONE SIDE OF THE POWER PANEL ON THE REAR OF DISK DRIVE (ITEM 1). POSITION A SHIPPING BRACKET TO DETERMINE LOCATION OF "U" NUTS (ITEM 13) AND ATTACH BRACKET USING ORIGINAL SCREWS AND LOCK-WASHERS AND ITEMS 12 & 9 (AS SHOWN IN DETAIL "A"). REPEAT PROCEDURE ON OTHER SIDE OF DRIVE.

5. TO MOUNT RL01 TO CABINET:
   A. MOUNT SLIDES AND BRACKETS TO UPRIGHTS.
   B. EXTEND SLIDES AS FAR AS POSSILE BY RELEASING CATCHES, SEE DETAIL "B" (SHT 2).
   C. PLACE DRIVE ON SLIDES AND PUSH BACK UNTIL ENDS OF RAILS FIT UNDER TABS ON SLIDES AND LATCHES ENGAGE.
   D. SECURE DRIVE TO SLIDES USING SCREWS SUPPLIED. SEE DETAIL "B" (SHT 2). TO REMOVE DRIVE, EXTEND SLIDES FULLY, REMOVE SCREWS RELEASE LATCHES AND LIFT OFF.

6. FOR LAST DRIVE IN A SYSTEM "CONTROLLER CABLE"(ITEM 3) PLUGS INTO EITHER SOCKET. TERMINATOR ASSY (ITEM 24) PLUGS INTO THE OTHER.

7 ITEM 22 THRU 27 ARE NOT ASSEMBLED UNTIL INSTALLATION IN A CABINET.

TITLE:	DISK CONTROLLER ASSY (RLV12)
SIZE	E
CODE	UA
NUMBER	RLV12-0-0
REV.	B
NEXT HIGHER ASSEMBLY	B-DD-RLV12-0
FIRST USED ON OPTION/MODEL	RLV12
BOARD LOCATION	N/A

digital

REVISIONS | CHK | CHANGE NO. | REV

AUTOMATED BY PRTLST.3P(44)

P A R T S L I S T

LINE	ITEM	DOCUMENT NUMBER	PART NUMBER	DESCRIPTION	QUANTITY PER VARIATION 00
1	1	E-UA-RL01-AK-0	ORL01-AK	RL01-A + RL01K-DC,115/230V	REF
2	2	F-UA-RL01K-DC-0	RL01K-DC	RL01 DATA PACK	REF
3	3		BC21Z-XX	SHIELDED I/O CABLE,RL01/RL02,PAS	REF
4	4	SEE NOTE 1	1213686-00	CHASSIS SLIDE SET INCLUDED 1 L.H	REF
5	5	A-MD-7419261-0-0	7419261-00	BRACKET CHASSIS SLIDE	REF
6	6	C-MD-7419262-0-0	7419262-00	PAR NUT	REF
7	7	C-MD-7419856-0-0	7419856-00	BRKT, RL01 SHIPPING	REF
8	8	C-IA-7419857-0-0	7419857-00	BRKT. CABLE SUPPORT	REF
9	9		9006073-01	SCREW,PAN,PHIL 10-32X 1/2 SS	REF
10	10		9006021-01	SCREW,PAN,PHIL 6-32X 5/16 SS	REF
11	11		9007649-00	WASHER, LOCK, EXTERNAL TOOTH #5	REF
12	12		9007651-00	WASHER, LOCK, EXTERNAL TOOTH #10	REF
13	13		9007786-00	RETAINER, U-NUT, 10-32	REF
14	14		9007085-00	CLAMP,CABLE,SCREW MTD. 1/2 "	1
15	15	A-SP-3700627-0-0	3700627-01	PKG OPTION RLV12	1
16	16		9006553-00	WASHER, FLAT, .375 O.D. X .156 I	REF
17	17		9006668-00	WASHR,FLAT 5/8 ODX 13/64IDX.032	REF
18	18		9007031-00	TIE,CABLE BUNDL.DIA 0- 3/4"=101	REF
19	19		9006039-04	SCREW,BIND,SLOT 8-32X 1/2 SS	REF
20	20		9008853-00	CONN,POWER 02P03W PLUG NEMA 06-1	REF
21	21	A-PL-H9504-2-0	H9504-00	REAR DOOR, HIBOY FULLY SLOTTED S	REF
22	22		9006563-00	NUT,KEP 8-32X 11/13AF	1
23	23	A-PL-7012938-0-0	7012938-00	*** THIS ITEM IS NOT USED ***	-
24	24	D-IA-7012293-0-0	7012293-00	TERMINATOR ASSEMBLY	1
25	25	D-UA-BC80M-0-0	BC80M-06	RLV12 TO FIRST DRIVE,6FT	1
26	26	D-UA-M8061-0-0	M8061-00	RL01/RL02 DISK CONTROL,22-BIT AD	1
27	27		9010174-01	SCREW,PAN,PHIL,SEMS 8-32X .31 L	1
28	28	SEE NOTE 2	3617674-00	LABEL,SERIAL & POWER,UNIVERSAL	REF
29	29		FKRLV12-UG	RLV12 DISK CONTROLLER USERS GUID	1
30	30		ORL02-FK	*** THIS ITEM IS NOT USED ***	-

REVISION HISTORY			BASIC PART NO: RLV12										
ENG	ECO NUMBER	REV	SECTION A OF A	DRN: JIM SICARD	DATE: 24-FEB-81		D	I	G	I	T	A	L
RF	INITIAL RLV12-MK001	A	SECTION. VARIATION INDEX [A] 00	CHK'D: BILL HOVEY	DATE: 3-SEP-81	TITLE PARTS LIST DISK CONTROLLER ASSY (RLV12)							
		B	[B]	DES.ENG.: ROBERT FITCH	DATE: 14-SEP-81								
			[C]	RESP.ENG.: ROBERT FITCH	DATE: 14-SEP-81	DOCUMENT NUMBER							
			[D]			SIZE	CODE	NUMBER				REV	
			[E]	MFG.ENG.: J. LONGO	DATE: 14-SEP-81	K	PL	RLV12-0-DBP				B	
			[F]	ASSEMBLY NUMBER: E-UA-RLV12-0-0	TOP DOCUMENT NUMBER: #B-DD-RLV12-0			FILE NAME: Z3133B.PLS				EDIT # 21	

"THIS DRAWING AND SPECIFICATIONS HEREIN, ARE THE PROPERTY OF DIGITAL EQUIPMENT CORPORATION AND SHALL NOT BE REPRODUCED OR COPIED OR USED IN WHOLE OR IN PART AS THE BASIS FOR THE MANUFACTURE OR SALE OF ITEMS WITHOUT WRITTEN PERMISSION. COPYRIGHT (C) 1982. DIGITAL EQUIPMENT CORPORATION "

MR

AUTOMATED BY PRTLST.3P(44)

P A R T S L I S T

LINE	ITEM	DOCUMENT NUMBER	PART NUMBER	DESCRIPTION	QUANTITY PER VARIATION 00
31	31		1212691-01	LENS,ENCODER SW"1/READY"	1
32	32		1212691-02	LENS,ENCODER SW"2/READY"	1
33	33		1212691-03	LENS,ENCODER SW"3/READY"	1
34	34		EKRLV12-CG	RLV12 DISK CONTROLLER CONF. SHEE	1

35 NOTE: 1 ITEMS #2 THRU #14 & #16 THRU #21 AND #28 ARE SUPPLIED WITH DRIVE
36 NOTE: - AND LISTED ON E-UA-RL02-AK-0.
37 NOTE: 2 REFER TO NOTE #1 ON SHEET 3 OF UA FOR INSTRUCTIONS.

D I G I T A L	TITLE	SECTION A OF A	SIZE	CODE	DOCUMENT NUMBER	REV
	DISK CONTROLLER ASSY (RLV12)		K	PL	RLV12-0-DBP	B

MR