THIS DRAWING AND SPECIFICATIONS, HEREIN, ARE THE PROPERTY OF DIGITAL EQUIPMENT CORPORATION AND SHALL NOT BE REPRODUCED OR COPIED OR USED IN WHOLE OR IN PART AS THE BASIS FOR THE MANUFACTURE OR SALE OF ITEMS WITHOUT WRITTEN PERMISSION.
COPYRIGHT © 1981 DIGITAL EQUIPMENT CORPORATION

JUMPER SHIP CONFIGURATION

CONFIGURATION	WIRE WRAP PINS FROM	TO	LEVEL
ADDRESS 22BIT I/O PAGE	M1	M2	L1
22BIT ADDRESS BAE REGISTER ENABLE	M11	M12	L1
VECTOR ADDRESS (160)	M3 M7 M6	M6 M8 M7	L1 L1 L2
DEVICE ADDRESS (774400)	M17 M21 M20	M20 M22 M21	L1 L1 L2
PARITY ERROR ABORT ENABLE	M24	M25	L1
PARITY ERROR ABORT DISABLE	M23	M24	0
VCO CLOCK	M26	M27	L1
CRYSTAL CLOCK	M28	M29	L1

0= NOT INSTALLED
L1: LEVEL ONE
L2: LEVEL TWO
SEE NOTE *1

NOTES: 1. WIRE WRAP JUMPERS ARE INSTALLED AFTER THE MODULE HAS SUCCESSFULLY PASSED MODULE TEST.
2. C66 IS NOT COMPATABLE WITH WAVE SOLDER OR AQUEOUS WASH.
3. E94 IS A SPARE

STEP E	↑ Y AXIS 0	STEP 0 TIMES
REPEAT	→ X AXIS 0	STEP 0 TIMES

CHK	CHANGE NO	REV
	M8061-MR3	C
	M. MLYNARCZYK	

ETCH REV. C-P4

SIGNATURES	DATE
DRN.	30 NOV 81
CHK D.	
MECH.ENG.	2 DEC 81
PROJ.ENG.	
PROD.	8 Dec 81

digital

TITLE M8061 RLV12

SCALE 2/1	SIZE	CODE	NUMBER	REV
SHT. 1 OF 1	D	UA	M8061-0-0	C

NEXT HIGHER ASSY. B-DD-M8061-0

MR 1 WO#

MR

AUTOMATED BY PRTLST.3P(44)

P A R T S L I S T

LINE	ITEM	DOCUMENT NUMBER	PART NUMBER	DESCRIPTION	QTY PER VARIATION 00	REFERENCE DESIGNATOR
1	1	D-MD-5014398-0-0	5014398-00	DRILL AND FTCH BD.	1	
2	2		1012784-00	.047 MFD 50V +80-20% CER	47	C1-C44,C49,C50,C58
3	3		1013466-09	1000.0 MMF 50V 10% X7R CER	1	C45
4	4		1013466-07	220.0 MMF 50V 5% CER	2	C46,C57
5	5		1005306-00	6.8MFD 35V 10% S.TANT	5	C47,C51,C52,C54,C55
6	6		1011740-00	5600.0 MMF 50V 10% CER	1	C48
7	7		1010279-01	.47 MFD 25V 20% CER	6	C53,C56,C59-C62
8	8		1013466-08	680.0 MMF 50V 10% X7R CER	2	C57,C63
9	9		1010646-00	.015 MFD 50V 2% M.POLYCARB	1	C64
10	10		1013466-02	18.0 MMF 50V 5% CER	1	C65
11	11		1016628-00	7.0 MMF TO 30.0 MMF TRIMMER	1	C66
12	12		1017472-00	10 MFD 35V +50-10% AL EL	5	C68,C70-C73
13	13		1018237-00	.0047 MFD 100V 1% POLYPROP	1	C69
14	14		1109991-00	1N 754A VZ= 6.8 5% .40W	2	D1,D2
15	15		1105275-00	D 672 TR= 15NS PIV= 60V SI	2	D3,D4
16	16		1111577-00	1N 4454 TR= 4NS PIV= 50 S	1	D5
17	17		1209941-02	PCB,HEADER 40PIN(2X20).100CC 90D	1	J1
18	18		1301475-00	1.10 K .25 W 5.0 % CC	1	R1
19	19		1304839-00	51.0 K .25 W 5.0 % CC	1	R2
20	20		1300365-00	1.0 K .25 W 5.0 % CC	8	R3,R14,R16,R19,R21,R22,R29,R39
21	21		1300295-00	330.0 .25 W 5.0 % CC	4	R4,R5,R9,R11
22	22		1301424-00	680.0 .25 W 5.0 % CC	4	R6,R7,R8,R10
23	23		1305114-00	3.48 K .25 W 1.0 % RN55D-F10	1	R12
24	24		1302873-00	261.0 .25 W 1.0 % RN55D-F10	1	R13
25	25		1304856-00	4.64 K .25 W 1.0 % RN55D-F10	1	R15
26	26		1302397-00	180.0 K .25 W 5.0 % CC	1	R17
27	27		1300229-00	100.0 .25 W 5.0 % CC	5	R18,R20,R35,R36,R43
28	28		1312930-00	5.10 K .25 W 5.0 % CC	1	R23
29	29		1300417-00	2.20 K .25 W 5.0 % CC	1	R24
30	30		1300247-00	120.0 .25 W 5.0 % CC	1	R25

REVISION HISTORY			BASIC PART NO: M8061										
ENG	ECO NUMBER	REV	SECTION A OF A	DRN: R.W.CAUNTER	DATE: 29-OCT-80		D	I	G	I	T	A	L
---	INITIAL	A	SECTION.VARIATION INDEX	CHK'D: R.W.CAUNTER	DATE: 29-JAN-81	TITLE	PARTS LIST						
MM	M8061-MR001	B	[A] 00			M8061 RLV12							
RF	M8061-MR002	C	[B]	DES.ENG: M.MLYNARCZYK	DATE: 29-JAN-81								
MM	M8061-MR003	D	[C]										
			[D]										
			[E]										
			[F]	RESP.ENG.: R.FITCH	DATE: 29-JAN-81	DOCUMENT NUMBER							
			[H]										
			[J]			SIZE	CODE	NUMBER			REV		
			[K]	MFG.ENG.: J.LONGO	DATE: 18-FEB-81	K	PL	M8061-0-DBP			D		
			[L]										
			[M]	ASSEMBLY NUMBER:	TOP DOCUMENT NUMBER:			FILE NAME:			EDIT #		
			[N]	D-UA-M8061-0-0	M8-DD-M8061-0			Z1949D.PLS			33		

"THIS DRAWING AND SPECIFICATIONS HEREIN, ARE THE PROPERTY OF DIGITAL EQUIPMENT CORPORATION AND SHALL NOT BE REPRODUCED OR COPIED OR USED IN WHOLE OR IN PART AS THE BASIS FOR THE MANUFACTURE OR SALE OF ITEMS WITHOUT WRITTEN PERMISSION. COPYRIGHT (C) 1982. DIGITAL EQUIPMENT CORPORATION "

MR

LINE	ITEM	DOCUMENT NUMBER	PART NUMBER	DESCRIPTION	QTY PER VARIATION 00	REFERENCE DESIGNATOR
31	31		1300271-00	220.0 .25 W 5.0 % CC	2	R26,R27
32	32		1309444-00	2.70 .50 W10.0 % CC	1	R28
33	33		1300316-00	470.0 .25 W 5.0 % CC	2	R30,R33
34	34		1300398-00	1.80 K .25 W 5.0 % CC	1	R31
35	35		1305126-00	619.0 .25 W 1.0 % RN55D-F10	2	R32,R47
36	36		1301320-00	1.20 K .25 W 5.0 % CC	1	R34
37	37		1309413-00	3.83 K .25 W 1.0 % RN55D-F10	1	R37
38	38		1302612-00	1.78 K .25 W 1.0 % RN55D-F10	1	R38
39	39		1303067-00	422.0 .25 W 1.0 % RN55D-F10	2	R40,R41
40	40		1311653-00	2.15 K .25 W 1.0 % RN55D-F10	1	R42
41	41		1305122-00	51.10 .25 W 1.0 % RN55D-F10	2	R44,R46
42	42		1302956-00	196.0 .25 W 1.0 % RN55D-F10	1	R45
43	43		1302871-00	1.21 K .25 W 1.0 % RN55D-F10	2	R48,R49
44	44		1302874-00	147.0 .25 W 1.0 % RN55D-F10	1	R50
45	45		1302941-00	14.70 K .25 W 1.0 % RN55D-F10	1	R51
46	46		1300479-00	10.0 K .25 W 5.0 % CC	1	R52
47	47		1300447-00	4.70 K .25 W 5.0 % CC	1	R53
48	48		1301781-00	82.0 .50 W 5.0 % CC	12	R54-R65
49	49		1300005-05	R NETWORK 13-82 5.0 % 14PIN	1	E121
50	50		1510705-00	XA 05 NPN 500MW SI 60 50 P	2	Q1,Q3
51	51		1510706-00	XA 55 PNP 500MW SI 60 50 P	2	Q2,Q4
52	52		1503029-00	2N 3640 PNP 200MW SI	2	Q5,Q6
53	53		1513489-00	2N 4401 NPN 350MW SI 40 20	1	Q7
54	54		1513490-00	2N 4403 PNP 350MW SI-40 30	1	Q8
55	55		1603358-00	12.0 UH 10% 300MA #DD12.0	2	L1,L2
56	56		1616653-01	DELAY= 100NS,10TAPS WITH TTLBU	1	E119
57	57		1616653-00	DELAY= 50NS,10TAPS WITH TTLBU	1	E132
58	58		1811660-12	OSCILLATOR XTAL 8.200 MHZ	1	E138
59	59		1911579-00	8641 TRANSCEIVER,BUS,QUA	2	E1,E8
60	60		1912815-00	LS30 NAND GATE-SINGLE 8IN	1	E2
61	61		1912837-00	LS123 ONE SHOT-DUAL,RETRIG	1	E3
62	62		1912834-00	LS112 FF-JK,DUAL,EDGE TRIG	2	E4,E5
63	63		1912854-00	LS193 COUNTER,SYNCHR,4BIT,	2	E6,E34
64	64		1911675-00	74S138 DECODER/DEMUX 3-8 LIN	1	E9
65	65		1912860-00	LS259 LATCH 8BIT	3	E10,E33,E39
66	66	SEE NOTE #1	1916680-00	2911 SEQUENCER,MICROPROGR	3	E11-E13
67	67		1909705-00	DEC 8881 NAND GATE-QUAD 2IN O	2	E14,E42
68	68		1912853-00	LS175 FF-D QUAD	1	E15
69	69		1912832-00	LS107 FF-JK DUAL MASTER/SL	3	E16,E65,E93
70	70		1914038-00	DC 010 BIPOLAR,MEM ADRESS,L	1	E17
71	71		1912803-00	LS04 INVERTER GATE,HEX	3	E18,E51,E71
72	72		1912824-00	LS74 FF-D DUAL,EDGE TRIGG	6	E19,E31,E48,E68,E79,E106
73	73		1912730-00	DC 003 INTERRUPT,2 CIRCUIT	1	E23
74	74		1912729-00	DC 004 PROTOCOL,REG. SELECT	1	E24
75	75		1912820-00	LS51 A-O-I GATE 2-WIDE 2I	3	E25,E72,E84
76	76		1912863-00	LS273 FF-D OCTAL W/CLEAR	3	E26-E28
77	77		1912842-00	LS138 DECODER-THREE INPUT,	2	E29,E40
78	78		1912801-00	LS02 NOR-GATE-QUAD 2IN	3	E30,E32,E95

D	I	G	I	T	A	L	TITLE	SECTION A OF A	SIZE	CODE	DOCUMENT NUMBER	REV
							M8061 RLV12		K	PL	M8061-0-DBP	D

MR

AUTOMATED BY PRTLST.3P(44)

P A R T S L I S T

LINE	ITEM	DOCUMENT NUMBER	PART NUMBER	DESCRIPTION	QTY PER VARIATION 00	REFERENCE DESIGNATOR
79	79		1914888-00	74S09N AND-GATE-QUAD 2INPUT	1	E35
80	80		1912849-00	LS161 COUNTER,SYNCHR,4BIT	2	E35,E125
81	81		1912816-00	LS32 OR GATE-QUAD 2IN,POS	1	E37
82	82		1912805-00	LS08 AND GATE-QUAD 2IN,PO	2	E38,E67
83	83		1910548-00	74S157 MUX 1 OF 2 (QUAD)	1	E41
84	84		1915932-00	LS125 BUFFER,QUAD BUS	1	E43
85	85		1913340-00	74S32 OR GATE-QUAD 2IN	1	E44
86	86		1912388-00	74S02 NOR GATE-QUAD 2IN,PO	3	E45,E92,E137
87	87		1912813-00	LS27 NOR GATE-TRIPLE 3IN	2	E46,E91
88	88		1910532-00	74S00 NAND GATE-QUAD 2IN	2	E47,E97
89	89		1913040-00	DC 005 TRANSCEIVER 4BIT	4	E49,E56,E66,E73
90	90		1915193-00	LS244 DRIVER,LINE,OCTAL,T	2	E50,E89
91	91		1912807-00	LS10 NAND GATE-TRIPLE 3IN	1	E52
92	92		1910534-00	74S04 INVERTER GATE-HEX II	4	E53,E61,E81,E77
93	93		1912697-00	LS174 FF-D HEX W/CLEAR	7	E54,E57,E59,E60,E63,E78,E117
94	94		1910544-00	74S74 FF-D DUAL,EDGE TRIGG	6	E55,E35,E104,E128,E131,E136
95	95		1914035-00	DC 006 BIPOLAR,BUS ADDRESS	3	E58,E88,E102
96	96		1912844-00	LS151 MUX 1 OF 8 & DATA	3	E64,E70,E129
97	97		2114212-00	P 2114-2 RAM,1024X4,STATIC	4	E69,E76,E83,E90
98	98		1912847-00	LS157 MUX 1 OF 2(QUAD)	1	E74
99	99		1912868-00	LS299 SHIFT REG. 8-BIT UNI	2	E75,E82
100	100		1912951-00	DM 8556 COUNTER,BINARY,4BIT	5	E80,E87,E101,E108,E114
101	101		1910547-00	74S153 MUX 1 OF 4 (DUAL)	1	E86
102	102		1914214-00	LS374 FF-D OCTAL EDGE TRIG	4	E96,E103,E109,E115
103	103		1913474-00	9401 GENERATOR/CHECKER CR	1	E98
104	104		1912096-00	DEC 74S86 XOR GATE,QUAD 2IN	1	E99
105	105		1911712-00	74S51 AND-OR GATE-INVERT D	1	E100
106	106		1910956-00	74S151 MUX 1 OF 8	1	E105
107	107		1913839-00	LS165 SHIFT REG.,8BIT	2	E107,E113
108	108		1912389-00	74S08 AND GATE-QUAD 2IN,PO	1	E110
109	109		1911341-00	75113 DRIVER,LINE,DUAL,MA	3	E111,E112,E118
110	110		1910542-00	74S64 A-O-I GATE 4-2-3-2	1	E116
111	111		23219A1-00	A1-07	1	E120
112	112		1911944-00	555CN TIMER,FUNCT.BLOCK	1	E122
113	113		1912541-00	79M05 VOLT REG,FIX -5V	1	E123
114	114		1910545-00	74S112 FF-JK DUAL,EDGE TRIG	1	E124
115	115		1910268-00	DEC 75107B RECEIVER,LINE,DUAL,	3	E126,E130,E133
116	116		1912536-01	7805 VOLT REG,FIX +5V	1	E127
117	117		1913017-00	3046 XSISTOR ARRAY,3 ISOL	1	E134
118	118		1911911-00	DEC 74S124 OSCILLATOR,DUAL VOLT	1	E135
119	119		9009149-01	PIN,STAKING 0.235 HX0.345LG SQUA	30	M1-M30
120	120		9009185-00	JUMPER, WIRE, INSULATED, BLACK B	3	W1-W3
121	121		1209941-03	PCB,HEADER LATCH	1	
122	122		1209941-04	PCB,HEADER LATCH	1	
123	123		1213113-01	HANDLE,MODULE,	1	
124	124		9000024-01	EYELET,ROLLED 0.1210DX0.192	8	
125	125		9007201-00	TRANSIPADS #10253	1	
126	126		1210001-00	HEAT SINKS,TO-5 .500DX0.25	1	

D	I	G	I	T	A	L	TITLE	SECTION A OF A	SIZE	CODE	DOCUMENT NUMBER	REV
							M8061 RLV12		K	PL	M8061-0-DBP	D

MR

LINE	ITEM	DOCUMENT NUMBER	PART NUMBER	DESCRIPTION	QTY PER VARIATION 00	REFERENCE DESIGNATOR
127	127		9006010-01	SCREW,PAN,PHIL 4-40X 5/16 SS	1	
128	128		9009990-00	NUT,KEP , 4-40 X1/4 AF	1	
129	129		23963A9-00	A9-01	1	E7
130	130		23134F3-00	F3-03	1	E22
131	131		23172F3-00	F3-03	1	E21
132	132		23136F3-00	F3-03	1	E20
133	133		23587A2-00	A2-05	1	E62
134	134		1215006-06	SKT,IC 24PIN DIP TIN PLATE	3	XE20-XE22
135	135		9105740-55	WIRE(WRAP)30AWG UL1423	A/R	
136	136		1215006-04	SKT,IC 20PIN DIP TIN PLATE	1	XE23
137	137		1618238-02	BEAD,FERRITE .1380DX.330LG	2	L3,L4
138	138		9107254-00	*** THIS ITEM IS NOT USED ***	-	

139 NOTE: 1. 1916680-01(2911-A) IS AN ALTERNATE PART FOR 1916680-00(2911).

D I G I T A L	TITLE M8061 RLV12	SECTION A OF A	SIZE K	CODE PL	DOCUMENT NUMBER M8061-0-DBP	REV D

NOTE: ⬡ DENOTES BACKPLANE CONNECTION

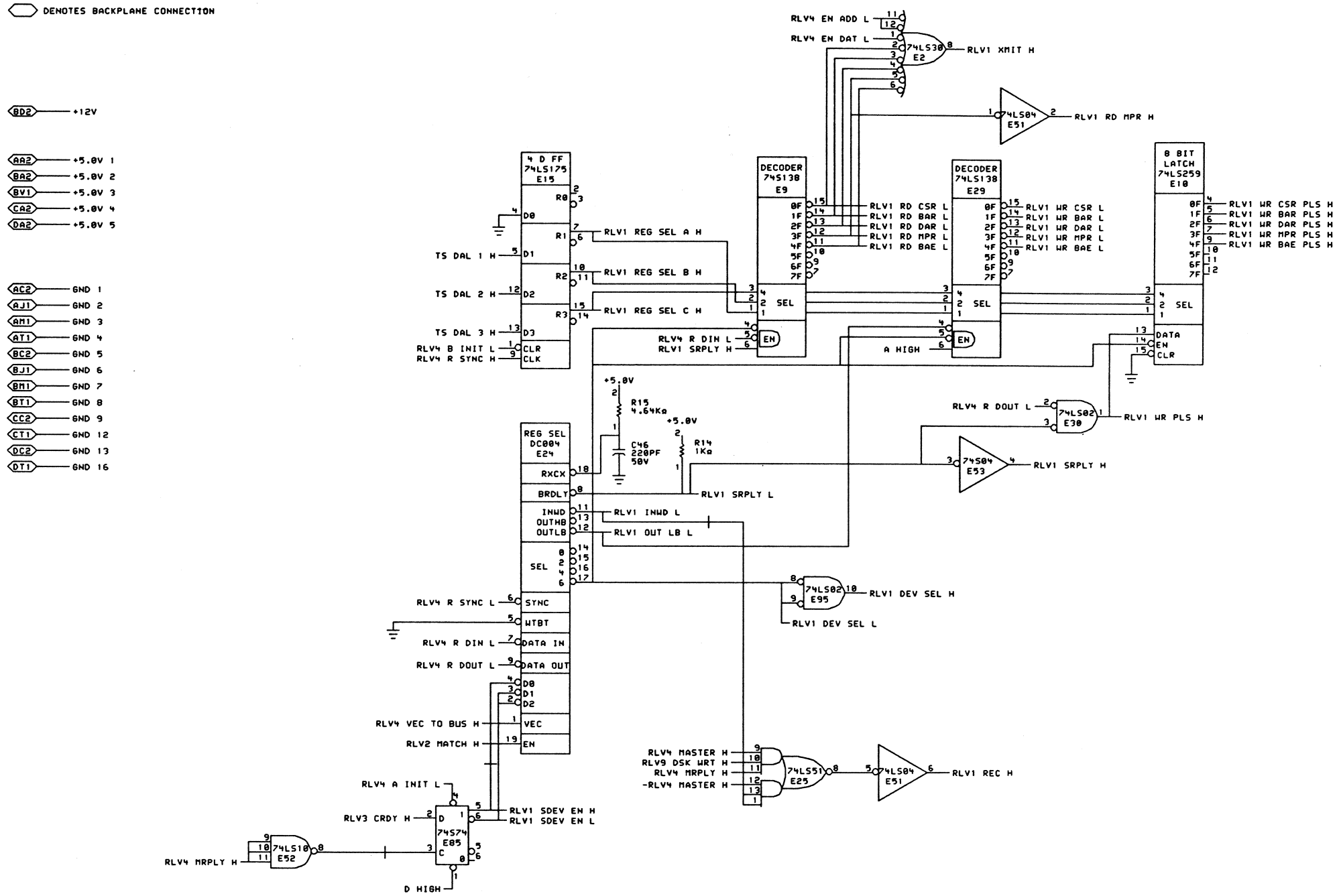

DRAWING 1 OF 15

"THIS DRAWING AND SPECIFICATIONS, HEREIN, ARE THE PROPERTY OF DIGITAL EQUIPMENT CORPORATION AND SHALL NOT BE REPRODUCED OR COPIED OR USED IN WHOLE OR IN PART AS THE BASIS FOR THE MANUFACTURE OR SALE OF ITEMS WITHOUT WRITTEN PERMISSION. COPYRIGHT © 1982, DIGITAL EQUIPMENT CORPORATION"

REVISIONS		
CHK	CHANGE NO.	REV
RW	M8061-MR003	B
M. WLYNARCZYK		

DRN. T. GIORGIO — DATE 04-MAR-82
CHK'D R.W. CAUNTER — DATE 9MAR82
ENG. M. WLYNARCZYK — DATE 9MAR82
BOARD LOCATION:
SHEET 1 OF 1
SUDCOM:<BOWEN.SCRATCH>RLV1.DRW 03-MAR-82 14:10
NEXT HIGHER ASSEMBLY: B-DD-M8061-0
FIRST USED ON OPTION/MODEL: RLV12

TITLE: BUS PROTOCOL

SIZE	CODE	NUMBER	REV.
D	CS	M8061-0-RLV1	B

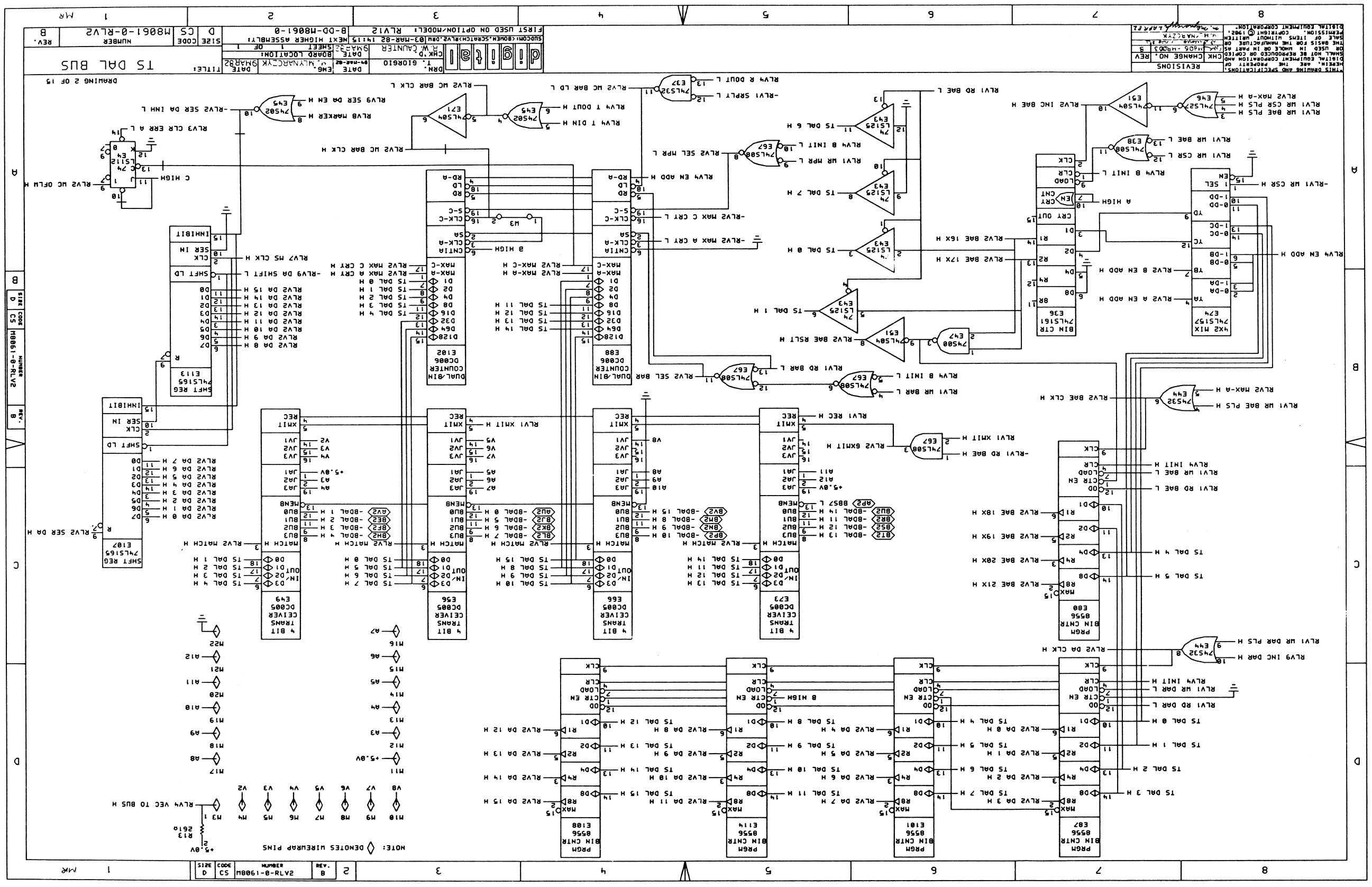
TS DAL BUS
M8061-0-RLV2
B-DD-M8061-0
RLV12
DRAWING 2 OF 15
NOTE: ◇ DENOTES WIREWRAP PINS
PROM BIN CNTR 8556 E187
PROM BIN CNTR 8556 E101
PROM BIN CNTR 8556 E119
PROM BIN CNTR 8556 E108
4 BIT TRANS CEIVER DC005 E73
4 BIT TRANS CEIVER DC005 E66
4 BIT TRANS CEIVER DC005 E56
4 BIT TRANS CEIVER DC005 E49
DUAL/BIN COUNTER DC006 E88
DUAL/BIN COUNTER DC006 E102
SHIFT REG 74LS165 E107
SHIFT REG 74LS165 E113
BIN CTR 74LS161 E36
HEX MIX 74LS157 E29
+5.8V
R13 261Ω
RLV4 VEC TO BUS H
RLV2 SER DA H
RLV2 DA 0 H
RLV2 DA 1 H
RLV2 DA 2 H
RLV2 DA 3 H
RLV2 DA 4 H
RLV2 DA 5 H
RLV2 DA 6 H
RLV2 DA 7 H
RLV2 DA 8 H
RLV2 DA 9 H
RLV2 DA 10 H
RLV2 DA 11 H
RLV2 DA 12 H
RLV2 DA 13 H
RLV2 DA 14 H
RLV2 DA 15 H
RLV7 MS CLK H
RLV3 CLR ERR A L
RLV2 UC OFLW H
C HIGH
RLV2 SER DA INH L
RLV9 SER DA EN H
RLV8 MARKER H
RLV4 T DIN H
RLV4 T DOUT H
RLV2 UC BAR CLK H
RLV2 UC BAR CLK L
RLV4 R DOUT L
-RLV1 SRPLY L
RLV2 UC BAR LD L
RLV1 RD BAE L
RLV1 WR BAE PLS H
RLV1 WR CSR PLS H
RLV2 MAX-A H
RLV1 WR CSR H
RLV2 INC BAE H
RLV1 WR CSR L
RLV4 B INIT L
RLV1 WR MPR L
RLV2 SEL MPR L
RLV4 EN ADD H
-RLV2 MAX C CRT L
-RLV2 MAX A CRT L
RLV2 BAE 16X H
RLV2 BAE 17X H
RLV2 B EN ADD H
RLV2 A EN ADD H
RLV2 BAE RSLT H
RLV1 RD BAR L
RLV1 WR BAR L
RLV2 SEL BAR
RLV2 BAE CLK H
RLV2 MAX-A H
RLV1 WR BAE PLS H
RLV1 XMIT H
RLV1 REC H
RLV2 BXMIT H
-RLV1 RD BAE H
RLV2 BAE 18X H
RLV2 BAE 19X H
RLV2 BAE 20X H
RLV2 BAE 21X H
RLV1 WR DAR PLS H
RLV9 INC DAR H
RLV2 DA CLK H
RLV4 INIT H
RLV1 WR DAR L
RLV1 RD DAR L
TS DAL 0 H
TS DAL 1 H
TS DAL 2 H
TS DAL 3 H
TS DAL 4 H
TS DAL 5 H
TS DAL 6 H
TS DAL 7 H
TS DAL 8 H
TS DAL 9 H
TS DAL 10 H
TS DAL 11 H
TS DAL 12 H
TS DAL 13 H
TS DAL 14 H
TS DAL 15 H
RLV2 MATCH H
RLV2 MAX C CRT H
RLV2 MAX A CRT H
RLV2 MAX-A H
RLV2 MAX-C H
RLV2 MAX C CRT L
RLV2 MAX A CRT L
-RLV9 DA SHIFT L
RLV2 SER DA H
RLV2 DA 0 H
RLV2 DA 1 H
RLV2 DA 2 H
RLV2 DA 3 H
RLV2 DA 4 H
RLV2 DA 5 H
RLV2 DA 6 H
RLV2 DA 7 H
RLV2 DA 8 H
RLV2 DA 9 H
RLV2 DA 10 H
RLV2 DA 11 H
RLV2 DA 12 H
RLV2 DA 13 H
RLV2 DA 14 H
RLV2 DA 15 H
-RLV2 REV
RLV2 DOUT L
RLV2 DIN H
RLV2 DOUT H
RLV2 DIN L
RLV2 DIN H
RLV2 DOUT L
RLV2 DIN L
RLV2 DOUT H

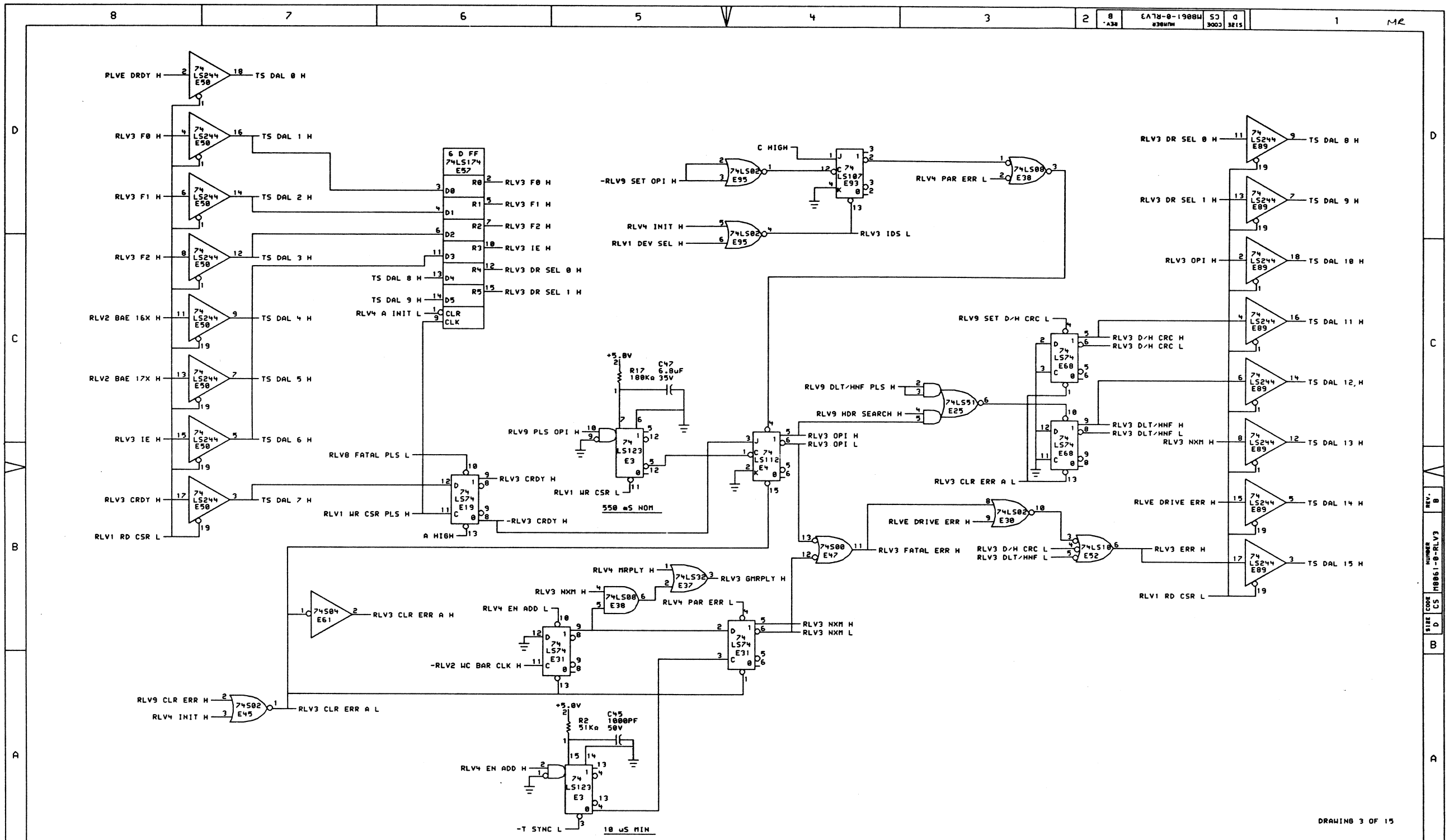

"THIS DRAWING AND SPECIFICATIONS, WHEREIN, ARE THE PROPERTY OF DIGITAL EQUIPMENT CORPORATION AND SHALL NOT BE REPRODUCED OR COPIED OR USED IN WHOLE OR IN PART AS THE BASIS FOR THE MANUFACTURE OR SALE OF ITEMS WITHOUT WRITTEN PERMISSION. COPYRIGHT © 1982, DIGITAL EQUIPMENT CORPORATION"

REVISIONS		
CHK	CHANGE NO.	REV
	M8061-M0003	B
M. MLYNARCZYK		

digital

SUDCON:<BOWEN.SCRATCH>RLV3.DRW 03-MAR-82 14:20

DRN. T. GIORGIO	DATE 04-MAR-82	ENG. W. MLYNARCZYK	DATE 9MAR82
CHK'D. R.W.CAUNTER	DATE 9MAR82	BOARD LOCATION: SHEET 1 OF 1	
FIRST USED ON OPTION/MODEL: RLV12		NEXT HIGHER ASSEMBLY: B-DD-M8061-0	

TITLE: CSR

SIZE	CODE	NUMBER	REV.
D	CS	M8061-0-RLV3	B

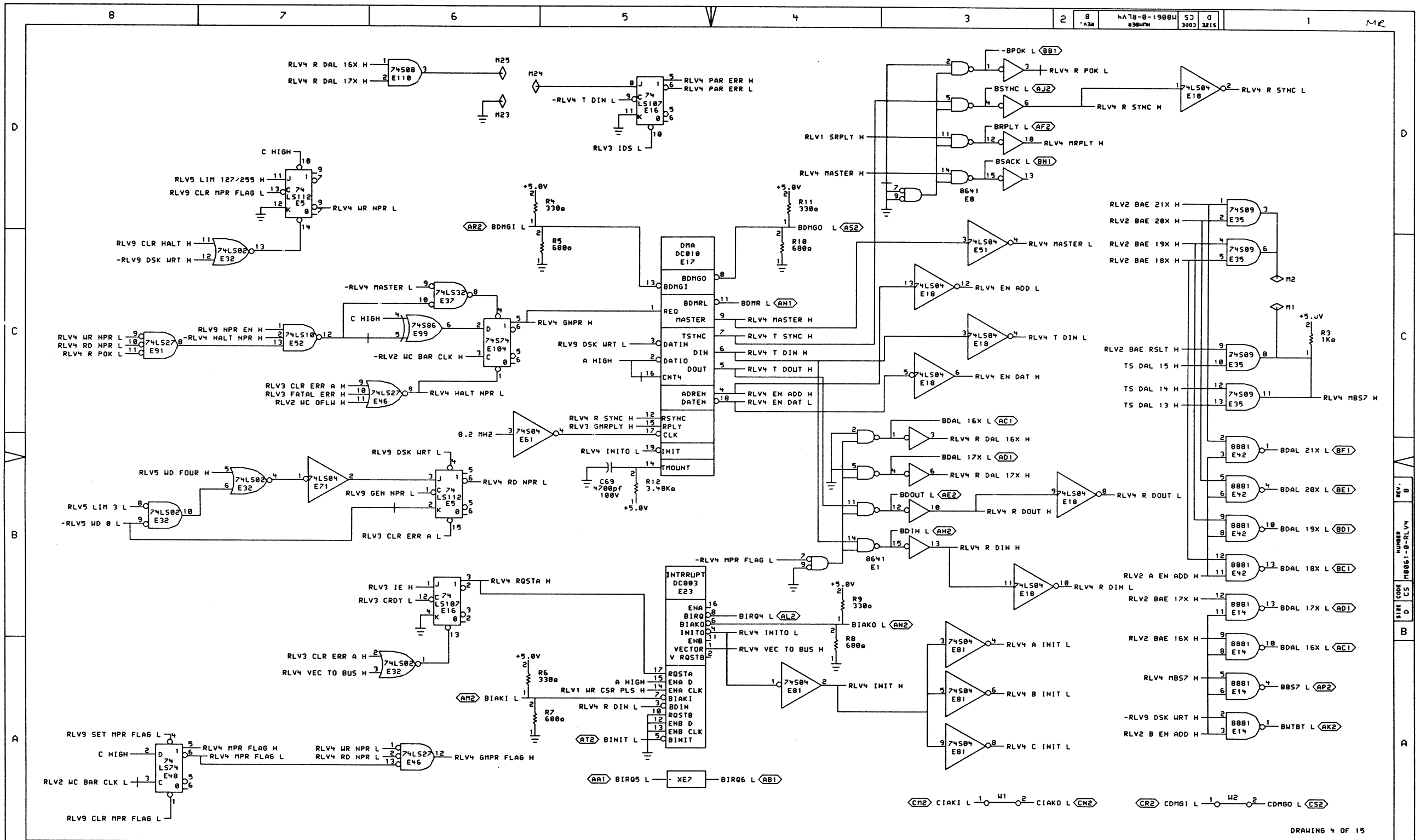
DMA
DC010
E17
INTRRUPT
DC003
E23
74S08 E110
74LS107 E16
74LS112 E5
74LS02 E32
74LS32 E37
74S86 E99
74LS10 E52
74LS27 E91
74LS27 E46
74S74 E104
74S04 E61
74S04 E71
74S04 E18
74S04 E51
74S04 E81
74S09 E35
8881 E42
8881 E14
8641 E8
8641 E1
RLV4 R DAL 16X H
RLV4 R DAL 17X H
M25
M23
M24
-RLV4 T DIN L
RLV4 PAR ERR H
RLV4 PAR ERR L
RLV3 IDS L
C HIGH
RLV5 LIM 127/255 H
RLV9 CLR MPR FLAG L
RLV4 WR NPR L
RLV9 CLR HALT H
-RLV9 DSK WRT H
+5.0V
R4 330Ω
R5 680Ω
R11 330Ω
R10 680Ω
AR2 BDMGI L
BDMGO L AS2
-RLV4 MASTER L
RLV9 NPR EN H
-RLV4 HALT NPR H
RLV4 WR NPR L
RLV4 RD NPR L
RLV4 R POK L
-RLV2 WC BAR CLK H
RLV4 GNPR H
RLV9 DSK WRT L
A HIGH
RLV3 CLR ERR A H
RLV3 FATAL ERR H
RLV2 WC OFLW H
RLV4 HALT NPR L
8.2 MHZ
RLV4 R SYNC H
RLV3 GMRPLY H
RLV4 INITO L
C69 4700pf 100V
R12 3.48KΩ
RLV5 WD FOUR H
RLV5 LIM 3 L
-RLV5 WD 0 L
RLV4 RD NPR L
RLV9 GEN NPR L
RLV3 CLR ERR A L
RLV3 IE H
RLV3 CRDY L
RLV4 RQSTA H
RLV3 CLR ERR A H
RLV4 VEC TO BUS H
R6 330Ω
R7 680Ω
AM2 BIAKI L
RLV1 WR CSR PLS H
RLV4 R DIN L
AT2 BINIT L
RLV9 SET MPR FLAG L
RLV4 MPR FLAG H
RLV4 MPR FLAG L
RLV2 WC BAR CLK L
RLV9 CLR MPR FLAG L
RLV4 GMPR FLAG H
AA1 BIRQ5 L
XE7
BIRQ6 L AB1
-BPOK L BB1
RLV4 R POK L
BSYNC L AJ2
RLV4 R SYNC H
RLV4 R SYNC L
BRPLY L AF2
RLV4 MRPLY H
BSACK L BN1
RLV1 SRPLY H
RLV4 MASTER H
BDMR L AN1
RLV4 MASTER L
RLV4 EN ADD L
RLV4 T SYNC H
RLV4 T DIN H
RLV4 T DOUT H
RLV4 T DIN L
RLV4 EN ADD H
RLV4 EN DAT L
RLV4 EN DAT H
BDAL 16X L AC1
RLV4 R DAL 16X H
BDAL 17X L AD1
RLV4 R DAL 17X H
BDOUT L AE2
RLV4 R DOUT H
RLV4 R DOUT L
BDIN L AH2
RLV4 R DIN H
RLV4 R DIN L
-RLV4 MPR FLAG L
BIRQ4 L AL2
BIAKO L AN2
RLV4 INITO L
RLV4 VEC TO BUS H
RLV4 INIT H
RLV4 A INIT L
RLV4 B INIT L
RLV4 C INIT L
CM2 CIAKI L
W1
CIAKO L CN2
CR2 CDMGI L
W2
CDMGO L CS2
RLV2 BAE 21X H
RLV2 BAE 20X H
RLV2 BAE 19X H
RLV2 BAE 18X H
M2
M1
R3 1KΩ
RLV2 BAE RSLT H
TS DAL 15 H
TS DAL 14 H
TS DAL 13 H
RLV4 MBS7 H
BDAL 21X L BF1
BDAL 20X L BE1
BDAL 19X L BD1
BDAL 18X L BC1
RLV2 A EN ADD H
RLV2 BAE 17X H
BDAL 17X L AD1
RLV2 BAE 16X H
BDAL 16X L AC1
RLV4 MBS7 H
BBS7 L AP2
-RLV9 DSK WRT H
RLV2 B EN ADD H
BWTBT L AK2
DRAWING 4 OF 15
"THIS DRAWING AND SPECIFICATIONS, HEREIN, ARE THE PROPERTY OF DIGITAL EQUIPMENT CORPORATION AND SHALL NOT BE REPRODUCED OR COPIED OR USED IN WHOLE OR IN PART AS THE BASIS FOR THE MANUFACTURE OR SALE OF ITEMS WITHOUT WRITTEN PERMISSION. COPYRIGHT © 1982, DIGITAL EQUIPMENT CORPORATION"
REVISIONS
CHK CHANGE NO. REV
RLV4-M8061-M2003 B
J. BOWEN 9-MAR-82
M. MLYNARCZYK 9-APR-82
digital
DRN. T. GIORGIO 04-MAR-82
CHK'D. R.W. CAUNTER 9MAR82
ENG. M.MLYNARCZYK 9MAR82
BOARD LOCATION:
SHEET 1 OF 1
SUDCOM:<BOWEN.SCRATCH>RLV4.DRW 03-MAR-82 14:24
FIRST USED ON OPTION/MODEL: RLV12
NEXT HIGHER ASSEMBLY: B-DD-M8061-0
TITLE: DMA AND INTERRUPT
SIZE D CODE CS NUMBER M8061-0-RLV4 REV. B

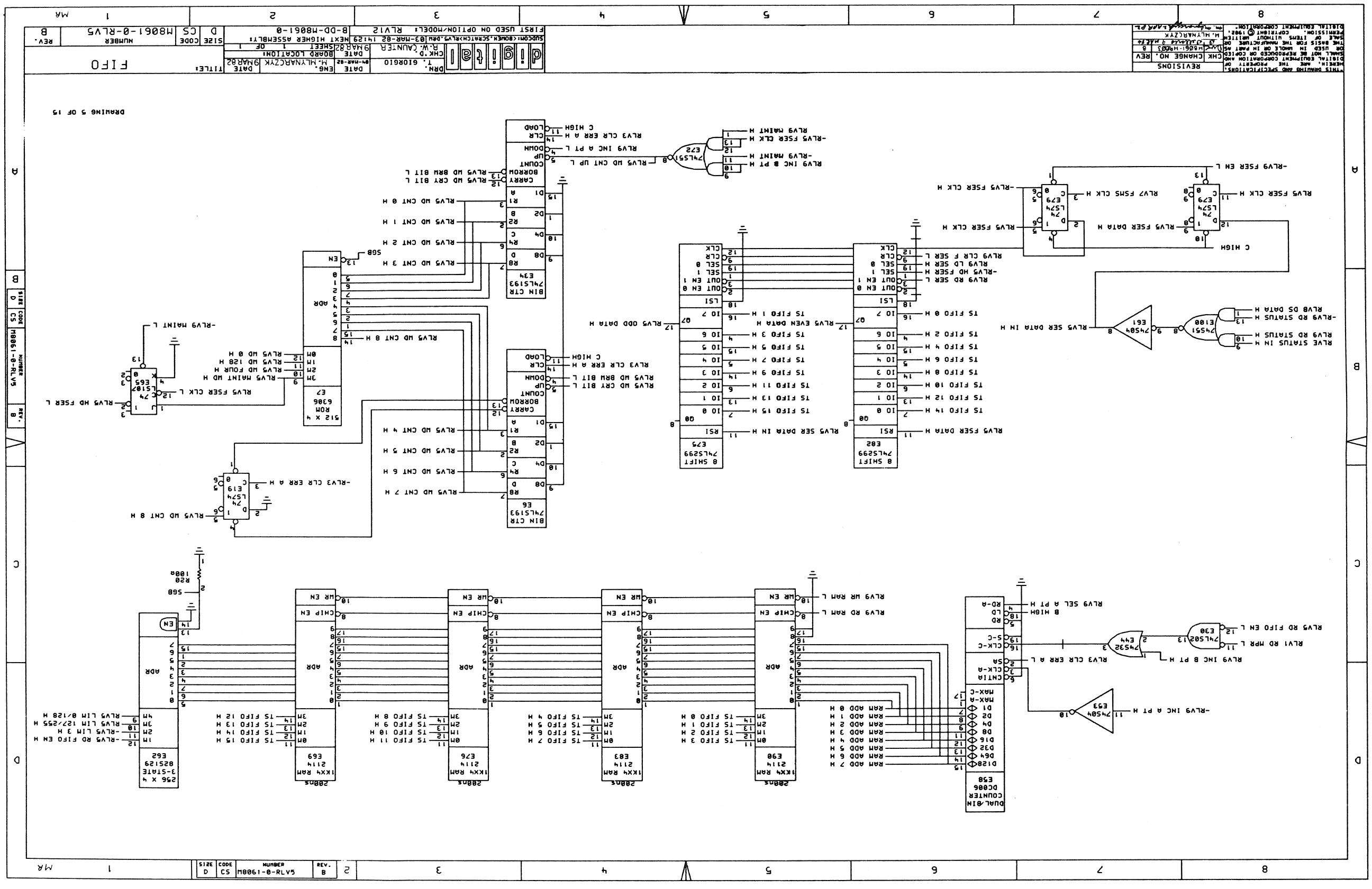
DRAWING 5 OF 15
FIFO
M8061-0-RLV5
B-DD-M8061-0
RLV12
DRAWN T. GIORGIO 04-MAR-82
ENG. M.LYNARCZYK 9MAR82
CHK'D R.W. CAUNTER 9MAR82
BOARD LOCATION:
DATE 03-MAR-82 1H129
NEXT HIGHER ASSEMBLY:
SHEET 1 OF 1
FIRST USED ON OPTION/MODEL:
REVISIONS
CHK CHANGE NO. REV
8 SHIFT 74LS299 E82
8 SHIFT 74LS299 E25
BIN CTR 74LS193 E34
BIN CTR 74LS193 E6
512 X 4 ROM 6306 E7
DUAL BIN COUNTER DC006 E58
256 X 4 3-STATE 82S129 E62
1KX4 RAM 2114 E69
1KX4 RAM 2114 E76
1KX4 RAM 2114 E83
1KX4 RAM 2114 E90
74LS02 E30
74S32 E44
74S04 E33
74S51 E100
74S04 E61
74LS74 E79
74LS51 E72
74LS157 E19
74LS157 E65
RLV5 FSER CLK H
RLV5 FSER DATA H
RLV5 FSER EN L
RLV5 SER DATA IN H
RLV5 RD FIFO EN L
RLV1 RD MPR L
RLV3 INC B PT H
RLV3 INC A PT H
RLV3 CLR ERR A H
RLV3 CLR ERR A L
RLV5 RD STATUS IN H
RLV5 RD STATUS H
RLV8 DS DATA H
RLV5 FSER CLK H
RLV7 FSMS CLK H
RLV5 HD FSER L
RLV5 FSER CLK L
RLV5 MAINT UD H
RLV5 UD FOUR H
RLV5 UD 128 H
RLV5 UD 0 H
RLV5 UD CNT 8 H
RLV5 UD CNT 0 H
RLV5 UD CNT 1 H
RLV5 UD CNT 2 H
RLV5 UD CNT 3 H
RLV5 UD CNT 4 H
RLV5 UD CNT 5 H
RLV5 UD CNT 6 H
RLV5 UD CNT 7 H
RLV5 UD CRY BIT L
RLV5 UD BRW BIT L
RLV5 UD CNT UP L
RLV5 INC A PT L
RLV5 CLR ERR A H
RLV5 MAINT H
-RLV5 FSER CLK H
RLV5 ODD DATA H
RLV5 EVEN DATA H
RLV5 SER DATA IN H
RLV5 FSER DATA H
RLV5 SER DATA IN H
RLV5 RD SER L
RLV5 LD SER H
-RLV5 HD FSER H
RLV5 CLR F SER L
RLV5 RD MPR H
RLV5 RD MPR L
RLV5 SEL A PT H
B HIGH
C HIGH
RAM ADD 0 H
RAM ADD 1 H
RAM ADD 2 H
RAM ADD 3 H
RAM ADD 4 H
RAM ADD 5 H
RAM ADD 6 H
RAM ADD 7 H
TS FIFO 0 H
TS FIFO 1 H
TS FIFO 2 H
TS FIFO 3 H
TS FIFO 4 H
TS FIFO 5 H
TS FIFO 6 H
TS FIFO 7 H
TS FIFO 8 H
TS FIFO 9 H
TS FIFO 10 H
TS FIFO 11 H
TS FIFO 12 H
TS FIFO 13 H
TS FIFO 14 H
TS FIFO 15 H
RLV5 LIM 0/128 H
RLV5 LIM 127/255 H
RLV5 LIM 3 H
-RLV5 RD FIFO EN H
-RLV5 MAINT L
SIZE D CODE CS NUMBER M8061-0-RLV5 REV. B