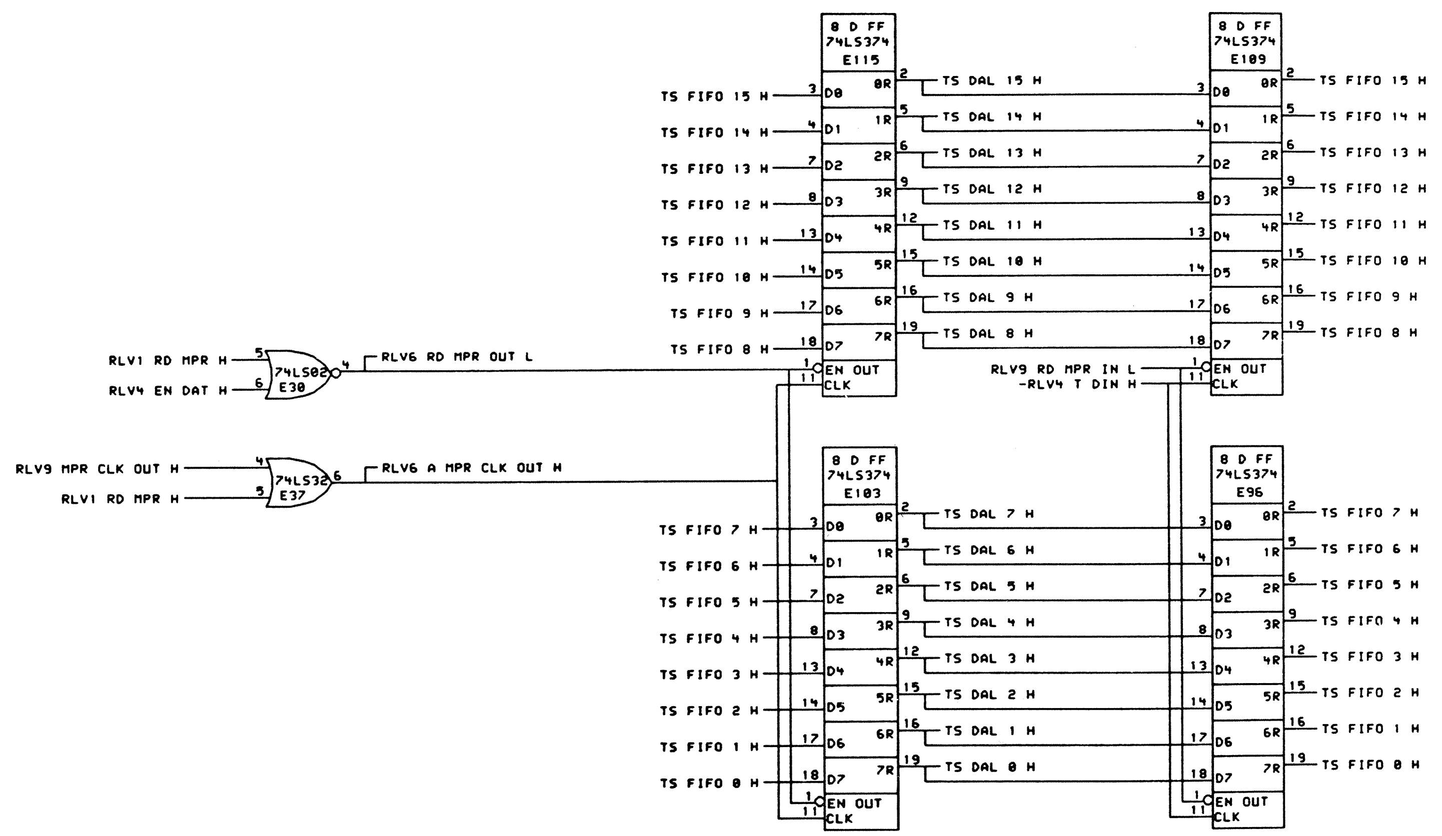


DRAWING 6 OF 15

THIS DRAWING AND SPECIFICATIONS, HEREIN, ARE THE PROPERTY OF DIGITAL EQUIPMENT CORPORATION AND SHALL NOT BE REPRODUCED OR COPIED OR USED IN WHOLE OR IN PART AS THE BASIS FOR THE MANUFACTURE OR SALE OF ITEMS WITHOUT WRITTEN PERMISSION. COPYRIGHT © 1982, DIGITAL EQUIPMENT CORPORATION

REVISIONS

| CHK | CHANGE NO. | REV |
|---|---|---|
| | M8061-MP003 | B |
| | M. MLYNARCZYK | |

digital

| | | | |
|---|---|---|---|
| DRN. T. GIORGIO | DATE 04-MAR-82 | ENG. M. MLYNARCZYK | DATE 9MAR82 |
| CHK'D. R.W. CAUNTER | DATE 9MAR82 | BOARD LOCATION: SHEET 1 OF 1 | |
| SUDCOM:(BOUEN,SCRATCH)RLV6.DRW 03-MAR-82 14:34 | | NEXT HIGHER ASSEMBLY: B-DD-M8061-0 | |
| FIRST USED ON OPTION/MODEL: RLV12 | | | |

TITLE: FIFO BUFFER REGISTER

| SIZE | CODE | NUMBER | REV. |
|---|---|---|---|
| D | CS | M8061-0-RLV6 | B |

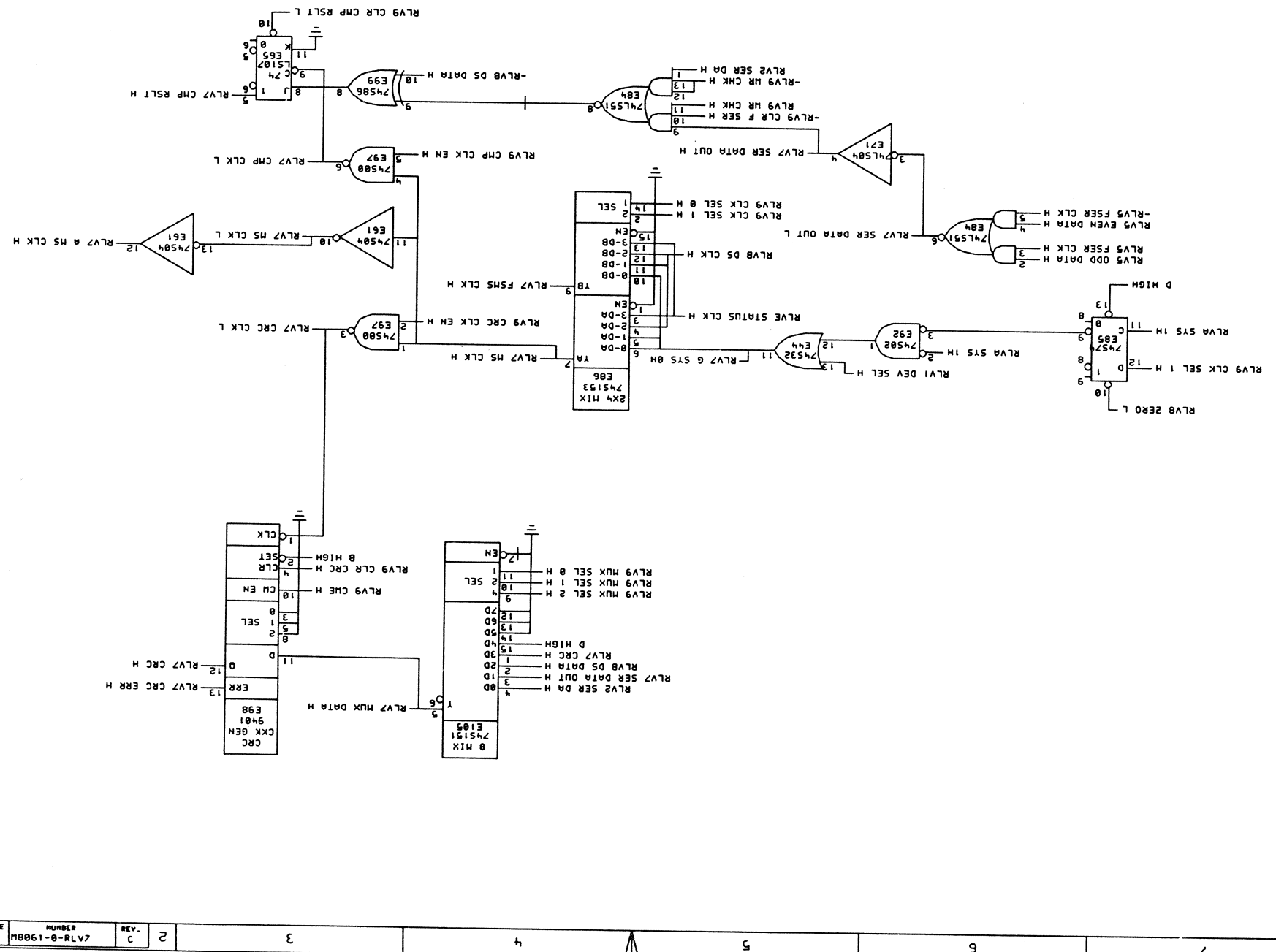


DRAWING 7 OF 15

| SIZE | CODE | NUMBER | REV. |
|---|---|---|---|
| D | CS | M8061-0-RLV7 | C |

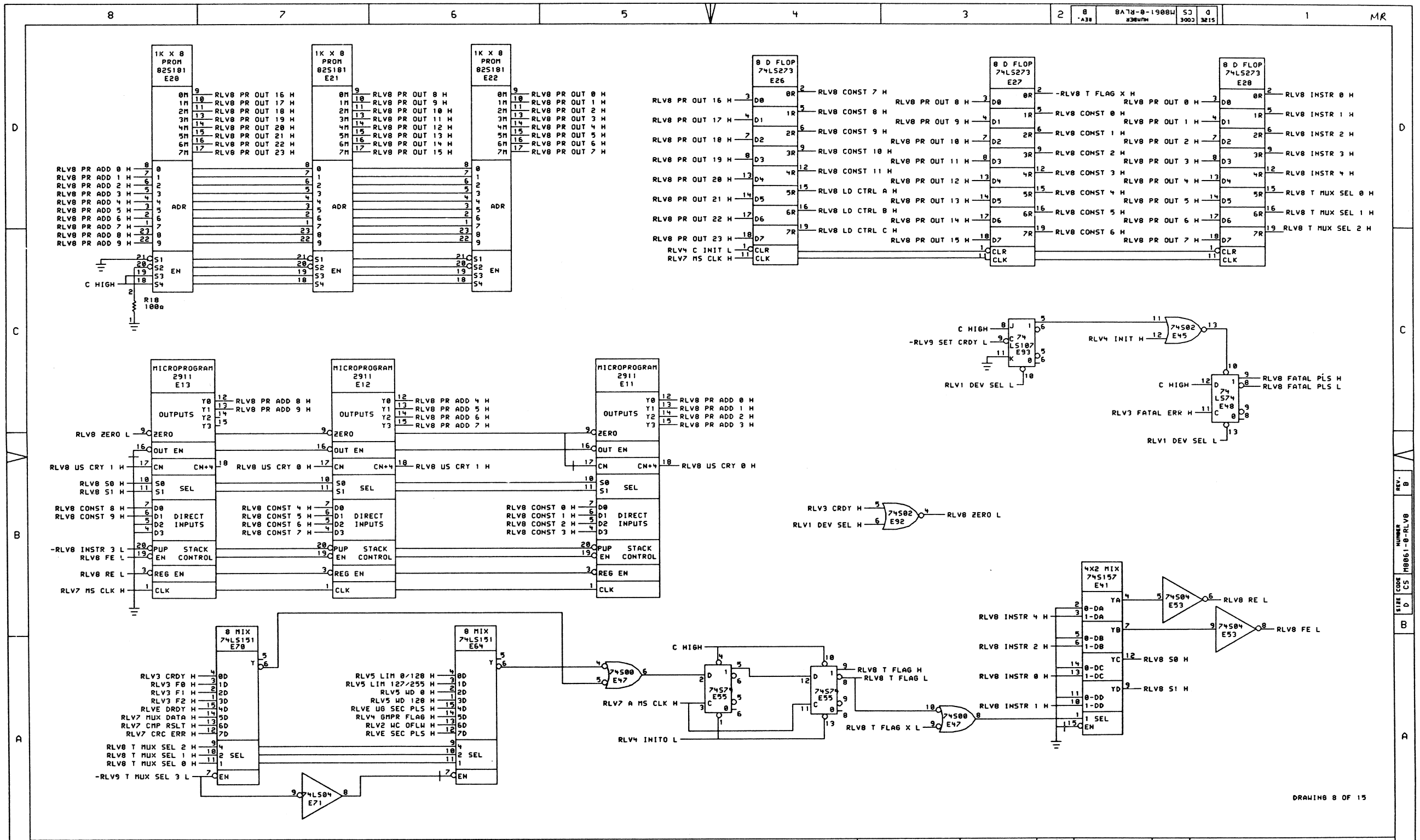


"THIS DRAWING AND SPECIFICATIONS, HEREIN, ARE THE PROPERTY OF DIGITAL EQUIPMENT CORPORATION AND SHALL NOT BE REPRODUCED OR COPIED OR USED IN WHOLE OR IN PART AS THE BASIS FOR THE MANUFACTURE OR SALE OF ITEMS WITHOUT WRITTEN PERMISSION. COPYRIGHT © 1982, DIGITAL EQUIPMENT CORPORATION"

| REVISIONS | | |
|---|---|---|
| CHK | CHANGE NO. | REV |
| | M8061-0-RLV8 | B |
| | H. WLYNARCZYK | |

digital

| | | | |
|---|---|---|---|
| DRN. T. GIORGIO | DATE 04-MAR-82 | ENG. H. WLYNARCZYK | DATE 9MAR82 |
| CHK'D. R.W. CAUNTER | DATE 9MAR82 | BOARD LOCATION: SHEET 1 OF 1 | |
| SUDCOM:<BOWEN.SCRATCH>RLV8.DRW 03-MAR-82 14:43 | | NEXT HIGHER ASSEMBLY: B-DD-M8061-0 | |
| FIRST USED ON OPTION/MODEL: RLV12 | | | |

TITLE: CONTROL STORE SEQUENCER

| SIZE | CODE | NUMBER | REV. |
|---|---|---|---|
| D | CS | M8061-0-RLV8 | B |

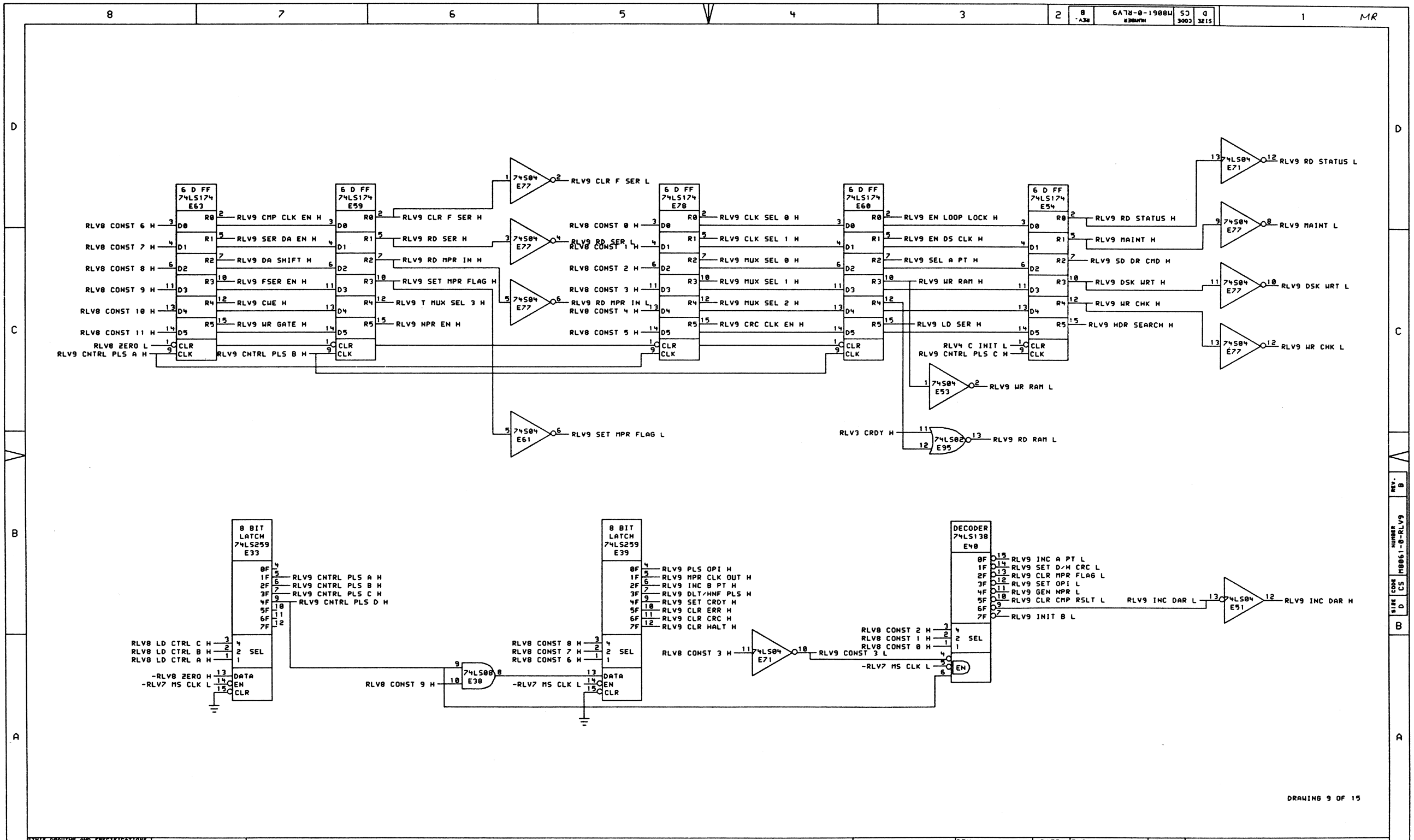


"THIS DRAWING AND SPECIFICATIONS, HEREIN, ARE THE PROPERTY OF DIGITAL EQUIPMENT CORPORATION AND SHALL NOT BE REPRODUCED OR COPIED OR USED IN WHOLE OR IN PART AS THE BASIS FOR THE MANUFACTURE OR SALE OF ITEMS WITHOUT WRITTEN PERMISSION. COPYRIGHT © 1982, DIGITAL EQUIPMENT CORPORATION"

| REVISIONS | | |
|---|---|---|
| CHK | CHANGE NO. | REV |
| | M8061-MR003 | B |
| | M. MLYNARCZYK | |

digital

| | | | |
|---|---|---|---|
| DRN. T. GIORGIO | DATE 04-MAR-82 | ENG. M. MLYNARCZYK | DATE 9MAR82 |
| CHK'D R.W. CAUNTER | DATE 9MAR82 | BOARD LOCATION: SHEET 1 OF 1 | |
| SUDCOM:<BOWEN.SCRATCH>RLV9.DRW 04-MAR-82 08:02 | | NEXT HIGHER ASSEMBLY: B-DD-M8061-0 | |
| FIRST USED ON OPTION/MODEL: RLV12 | | | |

TITLE: RLV12 CONTROL SIGNALS

| SIZE | CODE | NUMBER | REV. |
|---|---|---|---|
| D | CS | M8061-0-RLV9 | B |

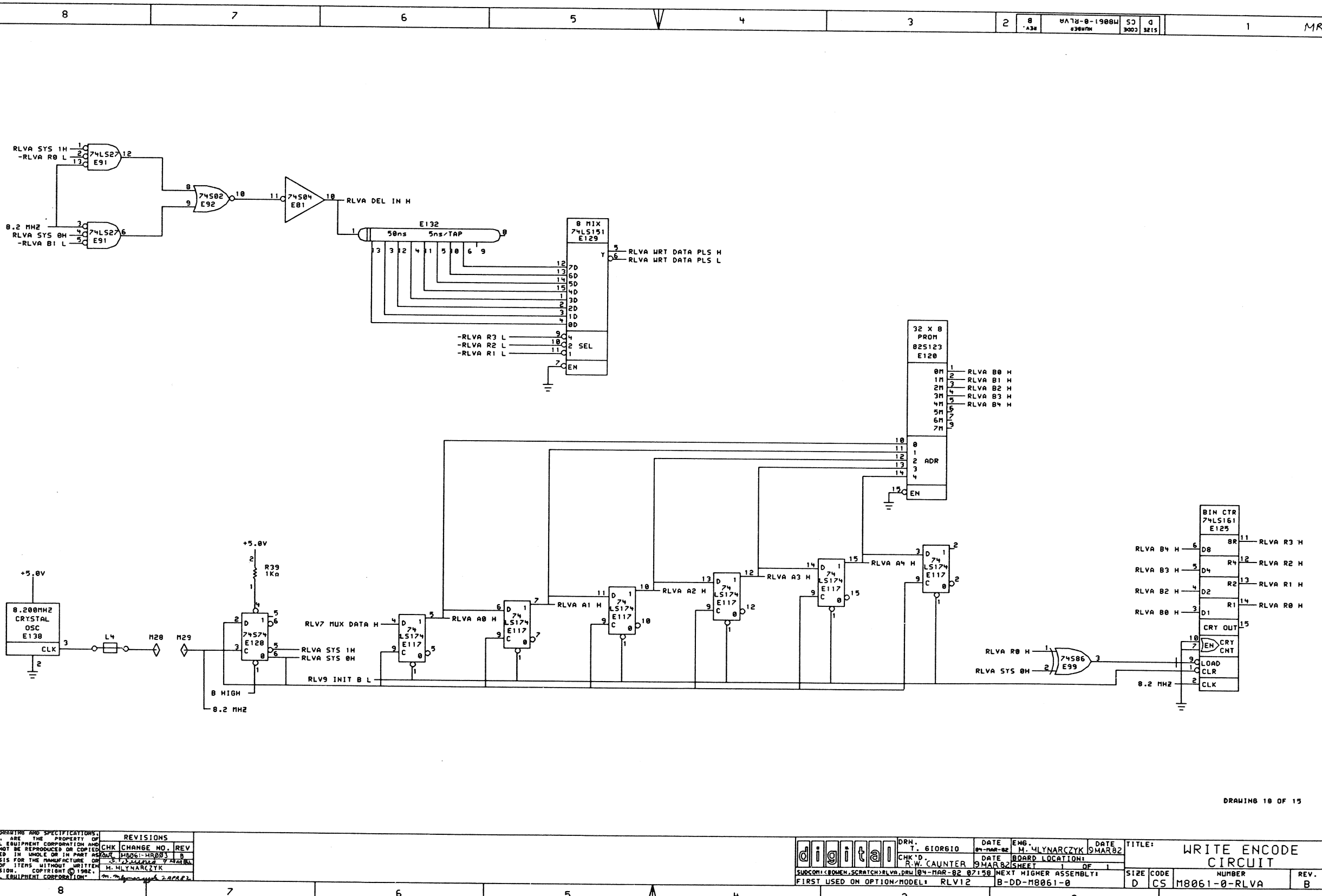


DRAWING 18 OF 15

"THIS DRAWING AND SPECIFICATIONS, HEREIN, ARE THE PROPERTY OF DIGITAL EQUIPMENT CORPORATION AND SHALL NOT BE REPRODUCED OR COPIED OR USED IN WHOLE OR IN PART AS THE BASIS FOR THE MANUFACTURE OR SALE OF ITEMS WITHOUT WRITTEN PERMISSION. COPYRIGHT © 1982 DIGITAL EQUIPMENT CORPORATION"

| REVISIONS | | |
|---|---|---|
| CHK | CHANGE NO. | REV |
| M. HLYNARCZYK | M8061-HR003 | B |

| | | | | | |
|---|---|---|---|---|---|
| DRW. T. GIORGIO | DATE 04-MAR-82 | ENG. M. HLYNARCZYK | DATE 9MAR82 | TITLE: WRITE ENCODE CIRCUIT | |
| CHK'D R.W. CAUNTER | DATE 9MAR82 | BOARD LOCATION: SHEET 1 OF 1 | | | |
| SUDCOM::[BOWEN,SCRATCH]RLVA.DRW 04-MAR-82 07:58 | | NEXT HIGHER ASSEMBLY: B-DD-M8061-0 | | SIZE D / CODE CS / NUMBER M8061-0-RLVA / REV. B | |
| FIRST USED ON OPTION/MODEL: RLV12 | | | | | |

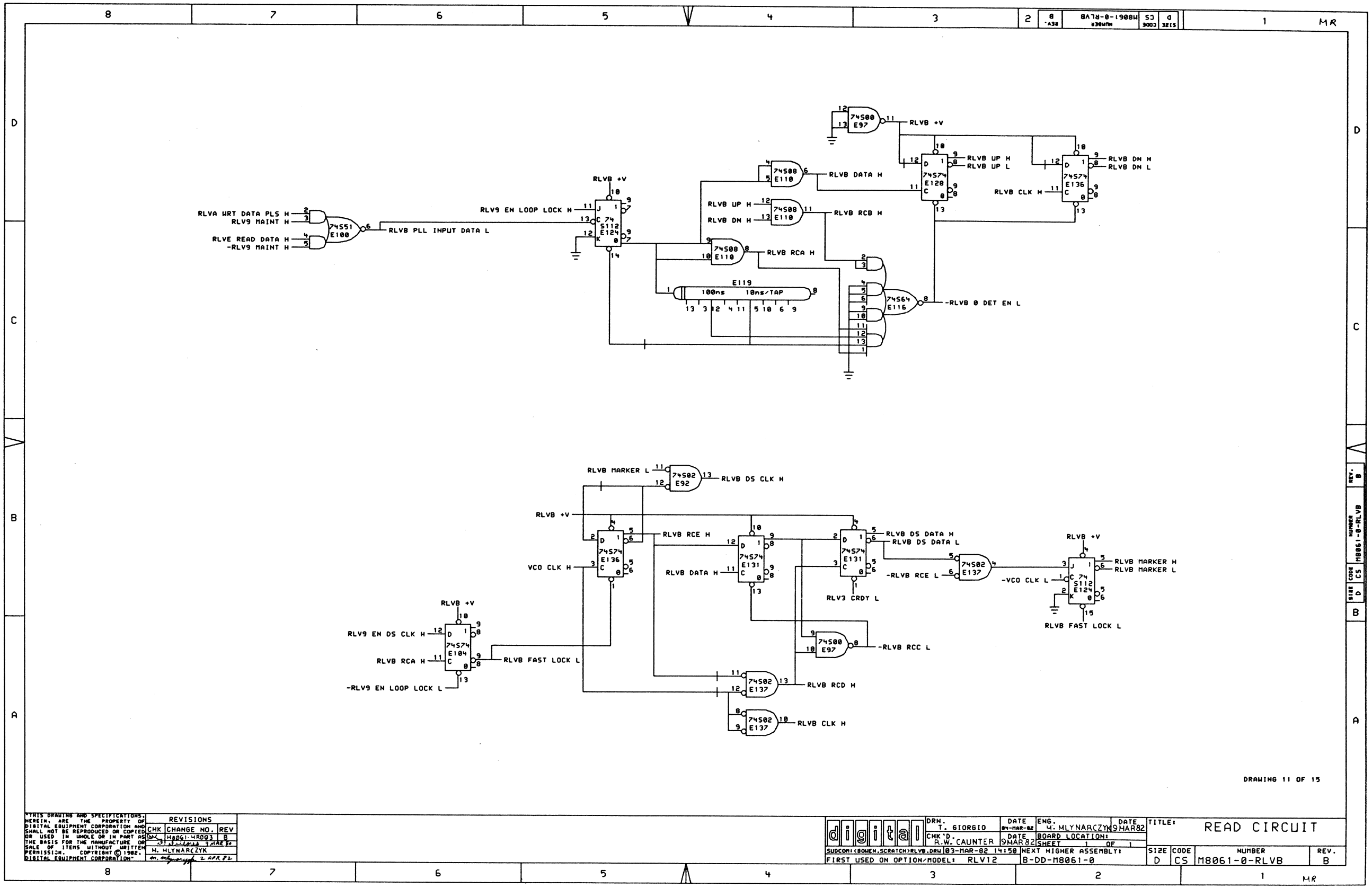


DRAWING 11 OF 15

"THIS DRAWING AND SPECIFICATIONS, HEREIN, ARE THE PROPERTY OF DIGITAL EQUIPMENT CORPORATION AND SHALL NOT BE REPRODUCED OR COPIED OR USED IN WHOLE OR IN PART AS THE BASIS FOR THE MANUFACTURE OR SALE OF ITEMS WITHOUT WRITTEN PERMISSION. COPYRIGHT © 1982, DIGITAL EQUIPMENT CORPORATION"

| REVISIONS | | |
|---|---|---|
| CHK | CHANGE NO. | REV |
| | M8061-MR003 | B |
| | 9 MAR 80 | |
| H. MLYNARCZYK | | |
| | 2 APR 82 | |

digital

| | | | |
|---|---|---|---|
| DRN. T. GIORGIO | DATE 04-MAR-82 | ENG. H. MLYNARCZYK | DATE 9MAR82 |
| CHK'D. R.W. CAUNTER | DATE 9MAR82 | BOARD LOCATION: SHEET 1 OF 1 | |
| SUDCOM:<BOWEN.SCRATCH>RLVB.DRW | 03-MAR-82 14:50 | NEXT HIGHER ASSEMBLY: B-DD-M8061-0 | |
| FIRST USED ON OPTION/MODEL: RLV12 | | | |

TITLE: READ CIRCUIT

| SIZE | CODE | NUMBER | REV. |
|---|---|---|---|
| D | CS | M8061-0-RLVB | B |

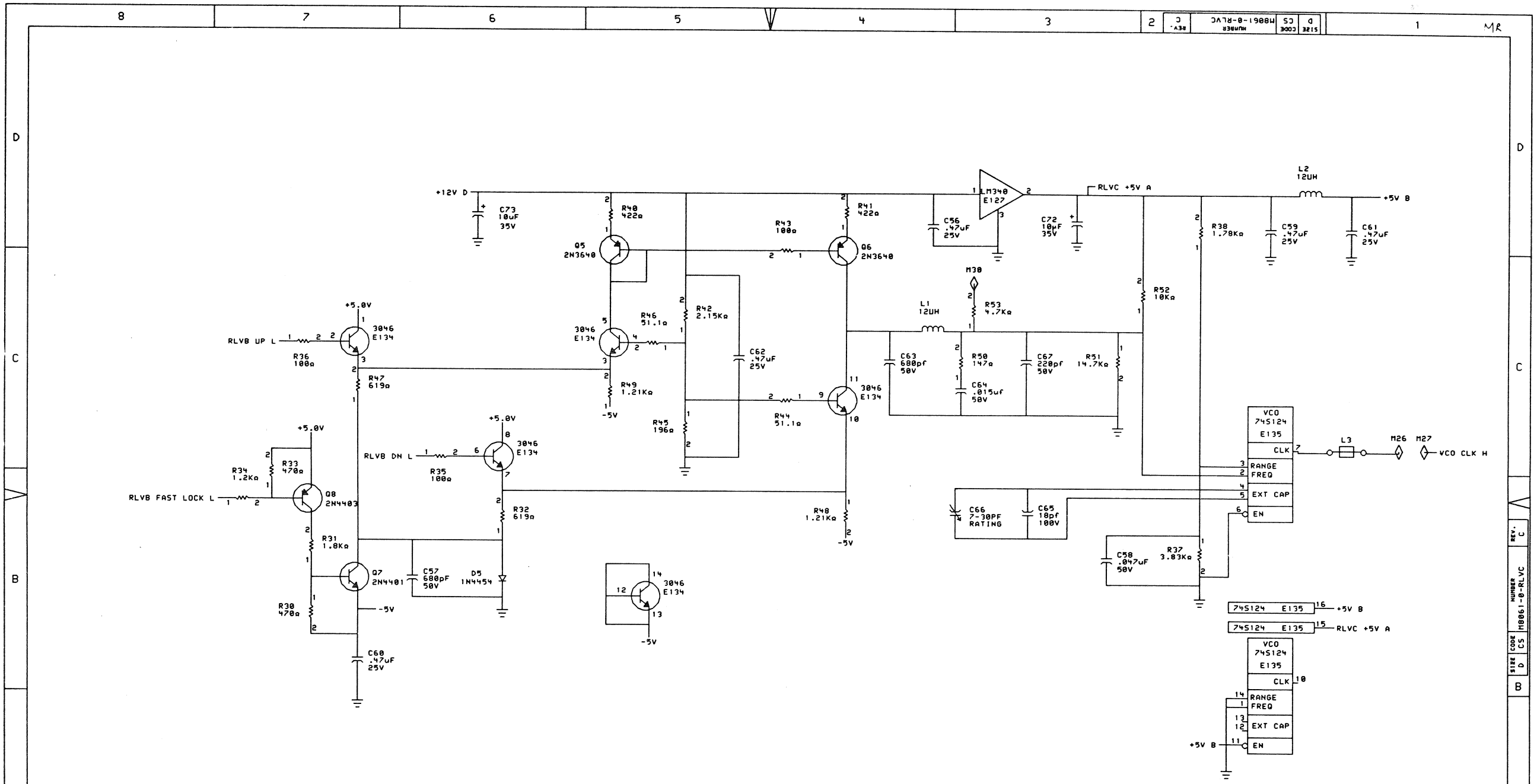


DRAWING 12 OF 15

"THIS DRAWING AND SPECIFICATIONS, HEREIN, ARE THE PROPERTY OF DIGITAL EQUIPMENT CORPORATION AND SHALL NOT BE REPRODUCED OR COPIED OR USED IN WHOLE OR IN PART AS THE BASIS FOR THE MANUFACTURE OR SALE OF ITEMS WITHOUT WRITTEN PERMISSION. COPYRIGHT © 1982, DIGITAL EQUIPMENT CORPORATION"

| REVISIONS | | |
|---|---|---|
| CHK | CHANGE NO. | REV |
| [illegible] | M8061-MA0003 | C |
| M. MLYNARCZYK | | |
| [illegible] 12APR82 | | |

DRN. T. GIORGIO — DATE 03-MAR-82 — ENG. M. MLYNARCZYK — DATE 9MAR82

CHK'D. R.W. CAUNTER — DATE 9MAR82 — BOARD LOCATION: — SHEET 1 OF 1

SUDCOM:<BOWEN.SCRATCH>RLVC.DRW 03-MAR-82 14:55 — NEXT HIGHER ASSEMBLY: B-DD-M8061-0 — FIRST USED ON OPTION/MODEL: RLV12

TITLE: CURRENT PUMP/VCO

| SIZE | CODE | NUMBER | REV. |
|---|---|---|---|
| D | CS | M8061-0-RLVC | C |

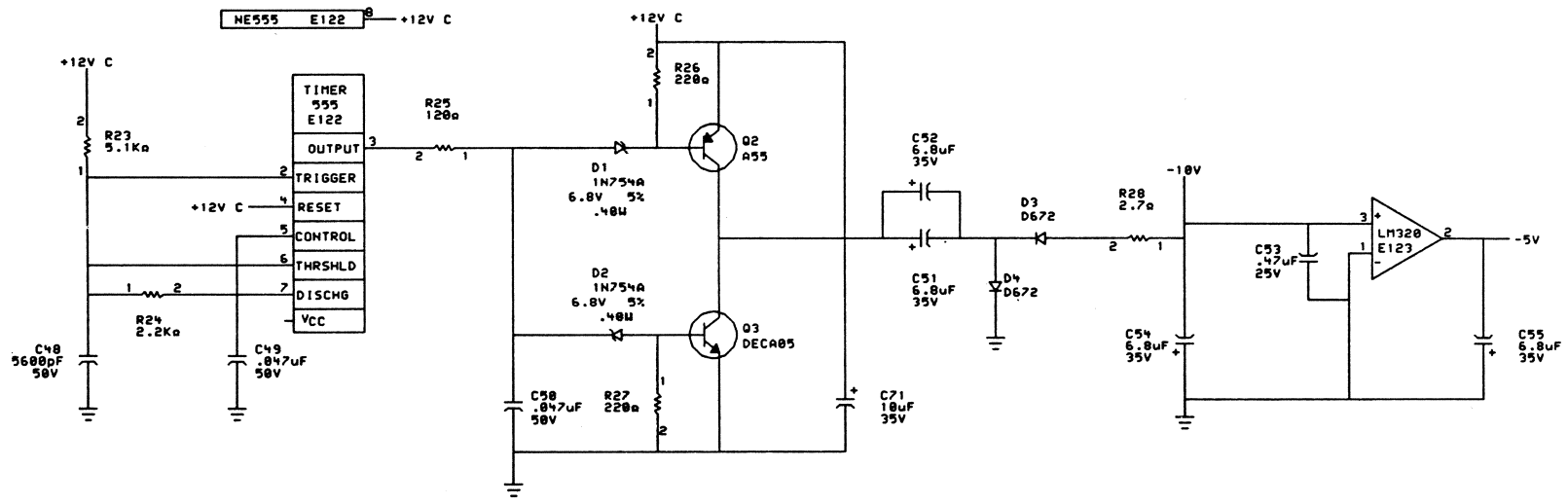


DRAWING 13 OF 15

"THIS DRAWING AND SPECIFICATIONS, HEREIN, ARE THE PROPERTY OF DIGITAL EQUIPMENT CORPORATION AND SHALL NOT BE REPRODUCED OR COPIED OR USED IN WHOLE OR IN PART AS THE BASIS FOR THE MANUFACTURE OR SALE OF ITEMS WITHOUT WRITTEN PERMISSION. COPYRIGHT © 1982, DIGITAL EQUIPMENT CORPORATION"

| REVISIONS | | |
|---|---|---|
| CHK | CHANGE NO. | REV |
| | M8061-MR001 | B |
| | W. MLYNARCZYK | |
| | 2 APR 82 | |

digital

| | | | |
|---|---|---|---|
| DRN. T. GIORGIO | DATE 04-MAR-82 | ENG. W. MLYNARCZYK | DATE 9MAR82 |
| CHK'D. R.W. CAUNTER | DATE 9MAR82 | BOARD LOCATION: SHEET 1 OF 1 | |
| SUBCOM:<BOWEN,SCRATCH>RLVD.DRW 03-MAR-82 15:01 | | NEXT HIGHER ASSEMBLY: B-DD-M8061-0 | |
| FIRST USED ON OPTION/MODEL: RLV12 | | | |

TITLE: -5V CHARGE PUMP

| SIZE | CODE | NUMBER | REV. |
|---|---|---|---|
| D | CS | M8061-0-RLVD | B |

MR

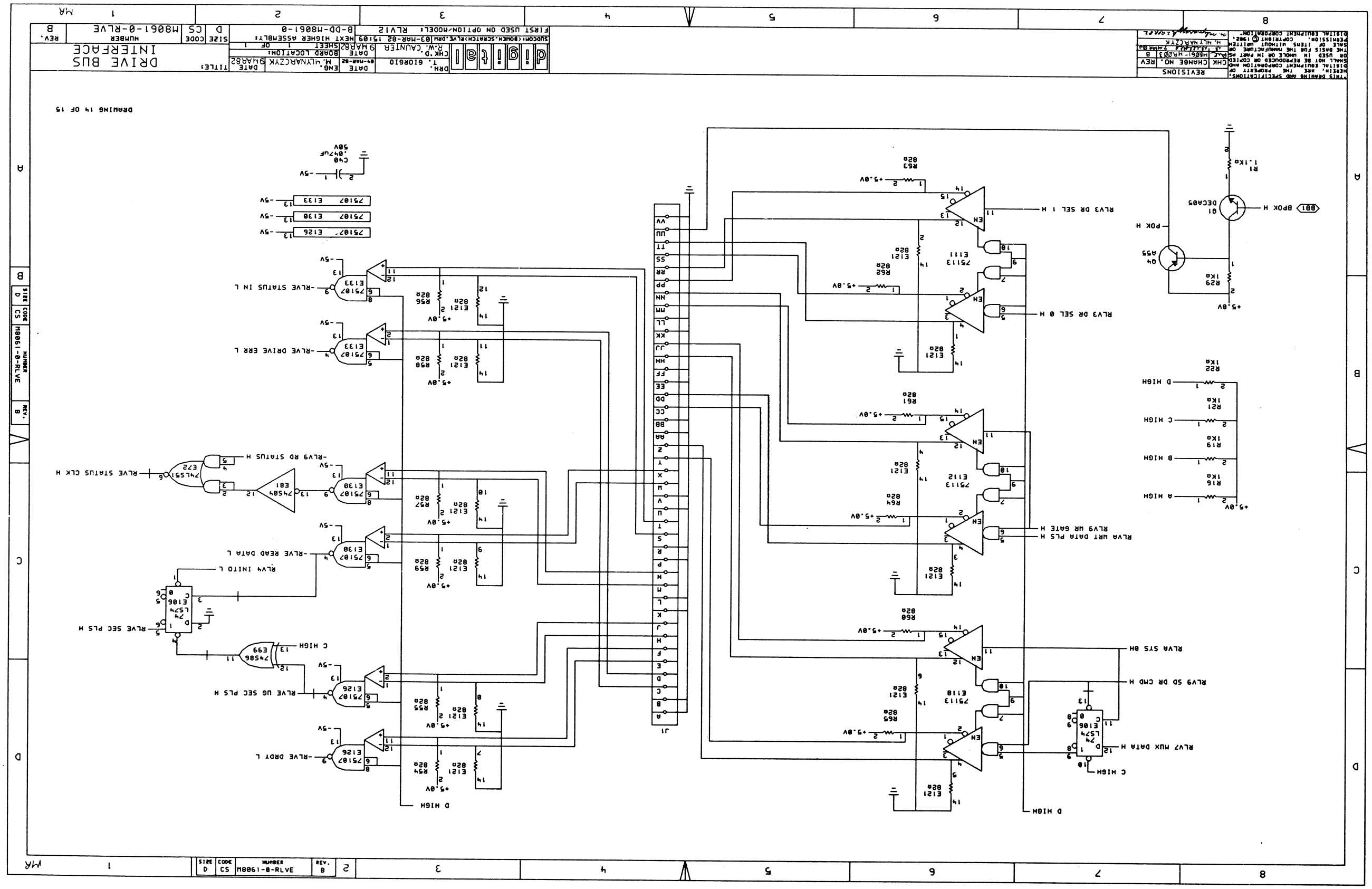
DRIVE BUS INTERFACE
M8061-0-RLVE
DRAWING 14 OF 15
RLV3 DR SEL 1 H
RLV3 DR SEL 0 H
RLV4 INITO L
RLVE SEC PLS H
RLVE UG SEC PLS H
RLVE DRDY L
RLVE READ DATA L
RLVE STATUS CLK H
RLV9 RD STATUS H
RLVE DRIVE ERR L
RLVE STATUS IN L
RLV7 MUX DATA H
RLV9 SD DR CMD H
RLVA SYS 0H
RLVA WRT DATA PLS H
RLV9 WR GATE H
POK H
BPOK H
A HIGH
B HIGH
C HIGH
D HIGH
REVISIONS

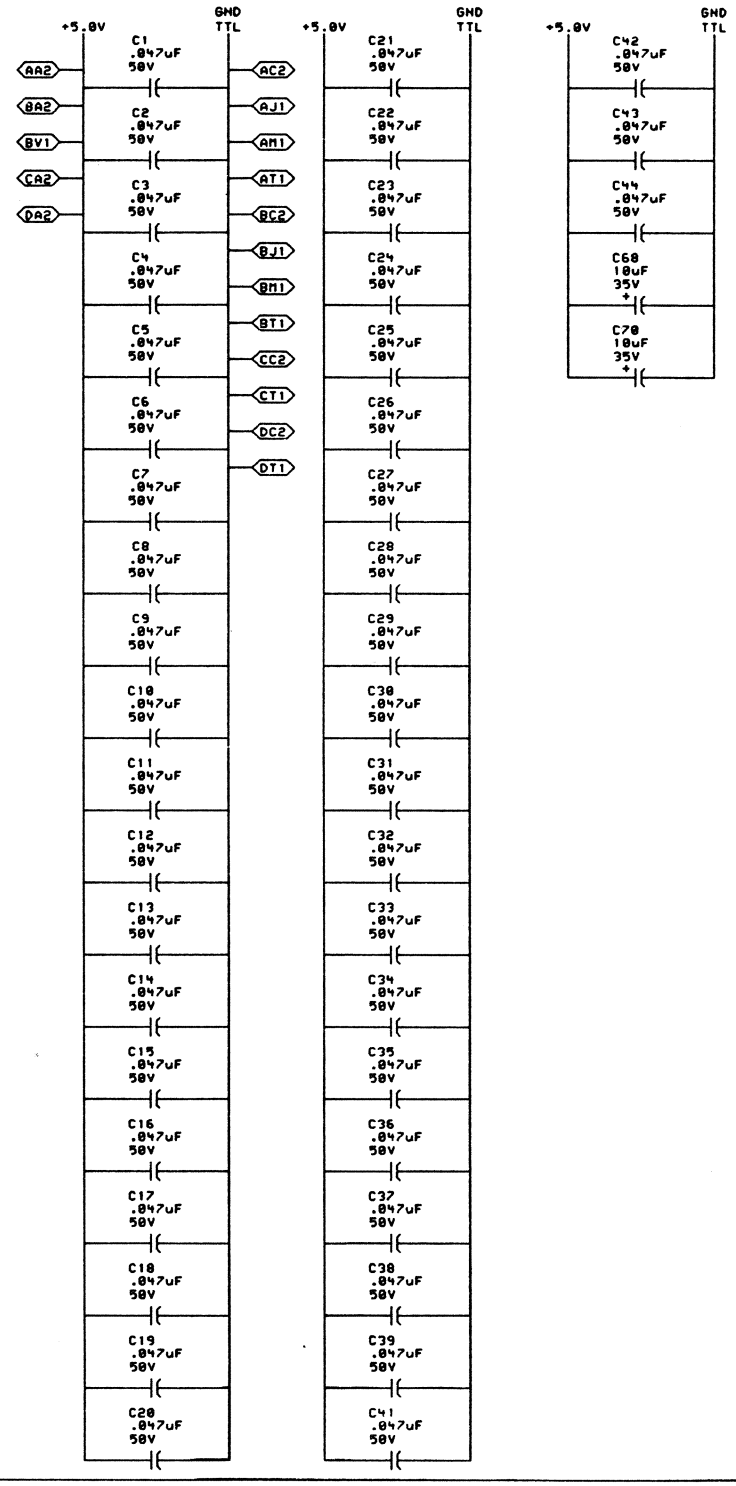


DRAWING 15 OF 15

"THIS DRAWING AND SPECIFICATIONS, HEREIN, ARE THE PROPERTY OF DIGITAL EQUIPMENT CORPORATION AND SHALL NOT BE REPRODUCED OR COPIED OR USED IN WHOLE OR IN PART AS THE BASIS FOR THE MANUFACTURE OR SALE OF ITEMS WITHOUT WRITTEN PERMISSION. COPYRIGHT © 1982, DIGITAL EQUIPMENT CORPORATION"

| REVISIONS | | |
|---|---|---|
| CHK | CHANGE NO. | REV |
| TWC | M8061-MR003 | B |
| H. HLYNARCZYK | | |

| | | | | | |
|---|---|---|---|---|---|
| digital | DRN. T. GIORGIO | DATE 04-MAR-82 | ENG. H. HLYNARCZYK | DATE 9MAR82 | TITLE: CAPS |
| | CHK'D A. W. CAUNTER | DATE 9MAR82 | BOARD LOCATION: SHEET 1 OF 1 | | |
| SUDCON:<BOWEN,SCRATCH>RLVF.DRW 03-MAR-82 15:18 | | | NEXT HIGHER ASSEMBLY: B-DD-M8061-0 | | |
| FIRST USED ON OPTION/MODEL: RLV12 | | | | | |

| SIZE | CODE | NUMBER | REV. |
|---|---|---|---|
| D | CS | M8061-0-RLVF | B |

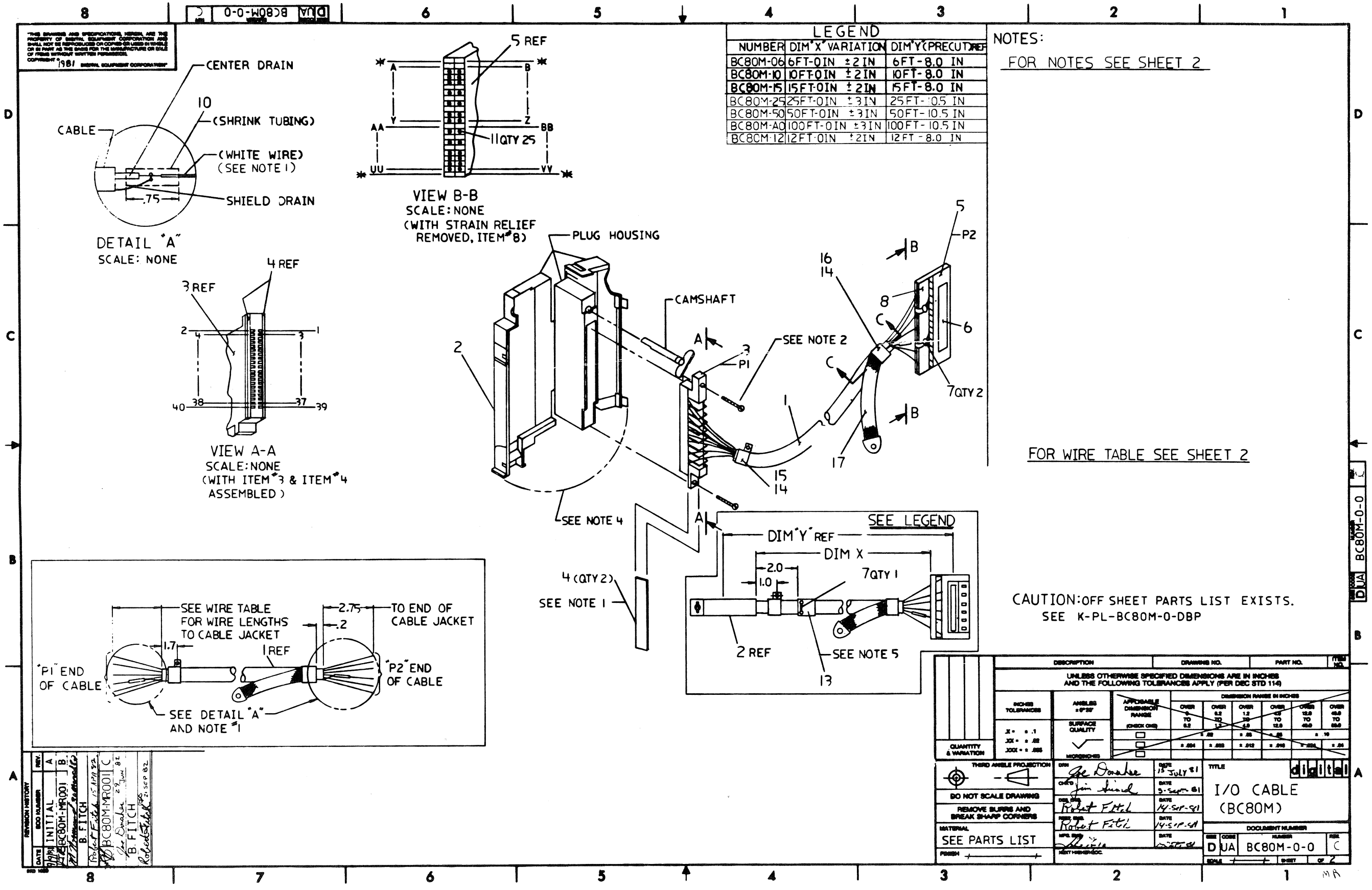


| LEGEND | | |
|---|---|---|
| NUMBER | DIM "X" VARIATION | DIM "Y" (PRECUT) REF |
| BC80M-06 | 6FT-0IN ±2IN | 6FT-8.0 IN |
| BC80M-10 | 10FT-0IN ±2IN | 10FT-8.0 IN |
| BC80M-15 | 15FT-0IN ±2IN | 15FT-8.0 IN |
| BC80M-25 | 25FT-0IN ±3IN | 25FT-10.5 IN |
| BC80M-50 | 50FT-0IN ±3IN | 50FT-10.5 IN |
| BC80M-A0 | 100FT-0IN ±3IN | 100FT-10.5 IN |
| BC80M-12 | 12FT-0IN ±2IN | 12FT-8.0 IN |

NOTES:

FOR NOTES SEE SHEET 2

FOR WIRE TABLE SEE SHEET 2

CAUTION: OFF SHEET PARTS LIST EXISTS.
SEE K-PL-BC80M-0-DBP

REVISION HISTORY

| REV. | ECO NUMBER | DATE | |
|---|---|---|---|
| A | INITIAL | 9/9/81 | |
| B | BC80M-MR001 | 17 Dec 81 | B. FITCH |
| C | BC80M-MR001 | 15 APR 82 | Robert Fitch |
| | | 29 Jun 82 | Joe Donahue |
| | | 21 SEP 82 | B. FITCH |

DESCRIPTION | DRAWING NO. | PART NO. | ITEM NO.

UNLESS OTHERWISE SPECIFIED DIMENSIONS ARE IN INCHES AND THE FOLLOWING TOLERANCES APPLY (PER DEC STD 114)

INCHES TOLERANCES: .X = ±.1, .XX = ±.02, .XXX = ±.005

ANGLES ±0°30'

SURFACE QUALITY

APPLICABLE DIMENSION RANGE (CHECK ONE)

DIMENSION RANGE IN INCHES: OVER 0 TO 0.2 | OVER 0.2 TO 1.2 | OVER 1.2 TO 4.0 | OVER 4.0 TO 12.0 | OVER 12.0 TO 48.0 | OVER 48.0 TO 60.0

QUANTITY & VARIATION

THIRD ANGLE PROJECTION

DO NOT SCALE DRAWING

REMOVE BURRS AND BREAK SHARP CORNERS

MATERIAL: SEE PARTS LIST

FINISH

DRN: Joe Donahue — DATE: 15 JULY 81

CHK'D: Jim Sinnd — DATE: 3-Sept-81

DES. ENG.: Robert Fitch — DATE: 14-SEP-81

REV. ENG.: Robert Fitch — DATE: 14-SEP-81

MFG. ENG.: [illegible] — DATE: [illegible]

NEXT HIGHER ASSY.

TITLE: I/O CABLE (BC80M)

digital

DOCUMENT NUMBER: SIZE D | CODE UA | NUMBER BC80M-0-0 | REV. C

SCALE | SHEET | OF 2

MA

"THIS DRAWING AND SPECIFICATIONS, HEREIN, ARE THE PROPERTY OF DIGITAL EQUIPMENT CORPORATION AND SHALL NOT BE REPRODUCED OR COPIED OR USED IN WHOLE OR IN PART AS THE BASIS FOR THE MANUFACTURE OR SALE OF ITEMS WITHOUT WRITTEN PERMISSION.
COPYRIGHT © 1981 DIGITAL EQUIPMENT CORPORATION"



## WIRE TABLE

| ITEM NO. | WIRE LENGTH TO CABLE JACKET | DESCRIPTION TWP | COLOR | FROM CONN | FROM TERM | TO CONN | TO TERM | SIGNAL NAME | REMARKS |
|---|---|---|---|---|---|---|---|---|---|
| 1 | | — | ——— | P1-1 | —— | P2-A | —— | ——— | NO CONN |
| | | — | ——— | P1-2 | —— | P2-B | —— | ——— | |
| | 2.50 | TWP | RED | P1-3 | —— | P2-C | ITEM*11 | DRV ERR + | ——— |
| | 2.50 | | WHT/RED | P1-4 | —— | P2-D | | DRV ERR − | ——— |
| | 2.38 | TWP | RED | P1-5 | —— | P2-E | | DRV RDY + | ——— |
| | 2.38 | | WHT/GRN | P1-6 | —— | P2-F | | DRV RDY − | ——— |
| | 2.25 | TWP | RED | P1-7 | —— | P2-H | | SEC PLS + | ——— |
| | 2.25 | | WHT/ORN | P1-8 | —— | P2-J | ITEM*11 | SEC PLS − | ——— |
| | ——— | — | ——— | P1-9 | —— | P2-K | —— | ——— | NO CONN |
| | ——— | — | ——— | P1-10 | —— | P2-L | —— | ——— | |
| | 2.00 | TWP | RED | P1-11 | —— | P2-M | ITEM*11 | STAT CLK + | ——— |
| | 2.00 | | WHT/YEL | P1-12 | —— | P2-N | ITEM*11 | STAT CLK − | ——— |
| | ——— | — | ——— | P1-13 | —— | P2-P | —— | ——— | NO CONN |
| | ——— | — | ——— | P1-14 | —— | P2-R | —— | ——— | |
| | 1.75 | TWP | RED | P1-15 | —— | P2-S | ITEM*11 | STAT IN + | ——— |
| | 1.75 | | WHT/BLK/RED | P1-16 | —— | P2-T | ITEM*11 | STAT IN − | ——— |
| | ——— | — | ——— | P1-17 | —— | P2-U | —— | ——— | NO CONN |
| | ——— | — | ——— | P1-18 | —— | P2-V | —— | ——— | |
| | 1.62 | TWP | RED | P1-19 | —— | P2-W | ITEM*11 | READ DATA+ | ——— |
| | 1.62 | | WHT/BLK/ORN | P1-20 | —— | P2-X | | READ DATA− | ——— |
| | 1.50 | TWP | RED | P1-21 | —— | P2-Y | | DRIVE CMND+ | ——— |
| 1 | 1.50 | | WHT/BLK/BLU | P1-22 | —— | P2-Z | ITEM*11 | DRIVE CMND− | ——— |

## WIRE TABLE

| ITEM NO. | WIRE LENGTH TO CABLE JACKET | DESCRIPTION TWP | COLOR | FROM CONN | FROM TERM | TO CONN | TO TERM | SIGNAL NAME | REMARKS |
|---|---|---|---|---|---|---|---|---|---|
| 1 | | — | ——— | P1-23 | —— | P2-AA | —— | ——— | NO CONN |
| | | — | ——— | P1-24 | —— | P2-BB | —— | ——— | |
| | .38 | TWP | RED | P1-25 | —— | P2-CC | ITEM*11 | WRT DATA − | ——— |
| | .38 | | WHT/BLK/BRN | P1-26 | —— | P2-DD | ITEM*11 | WRT DATA + | ——— |
| | ——— | — | ——— | P1-27 | —— | P2-EE | —— | ——— | NO CONN |
| | ——— | — | ——— | P1-28 | —— | P2-FF | —— | ——— | |
| | 1.25 | TWP | RED | P1-29 | —— | P2-HH | ITEM*11 | SYS CLK − | ——— |
| | 1.25 | | WHT/GRN/RED | P1-30 | —— | P2-JJ | ITEM*11 | SYS CLK + | ——— |
| | ——— | — | ——— | P1-31 | —— | P2-KK | —— | ——— | NO CONN |
| | ——— | — | ——— | P1-32 | —— | P2-LL | —— | ——— | |
| | .13 | TWP | RED | P1-33 | —— | P2-MM | ITEM*11 | WRT GATE − | ——— |
| | .13 | | WHT/GRN/BLU | P1-34 | —— | P2-NN | | WRT GATE + | ——— |
| | 1.00 | TWP | RED | P1-35 | —— | P2-PP | | DRV SEL1 − | ——— |
| | 1.00 | | WHT/GRN/YEL | P1-36 | —— | P2-RR | | DRV SEL1 + | ——— |
| | .88 | TWP | RED | P1-37 | —— | P2-SS | | DRV SELØ − | ——— |
| | .88 | | WHT/GRN/BRN | P1-38 | —— | P2-TT | | DRV SELØ + | ——— |
| | .75 | TWP | YEL | P1-39 | —— | P2-UU | ITEM*11 | DC OK | ——— |
| | ——— | | WHT | ——— | —— | ——— | —— | ——— | SEE NOTE 1 |
| 1 | 1.75 | — | BLK | P1-40 | —— | P2-VV | ITEM*12 | GND | SEE NOTE 1 |

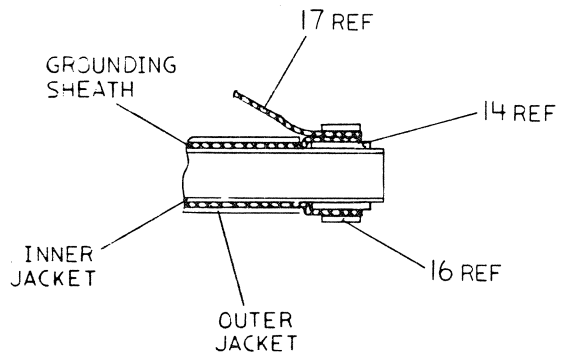


SECTION C-C
SCALE: NONE

NOTES:

1. THE DRAIN WIRE AND INNER GND WIRE MUST BE PREPARED AS FOLLOWS BEFORE TERMINATING CABLE TO PLUG ON BOTH ENDS OF WIRE.
   A. CUT BACK THE CENTER BLACK GND WIRE 0.4±0.1 INCH ABOVE JACKET, STRIP END 0.25 ± .06 INCH.
   B. FIND AND SEPARATE THE SOLID WHITE AND YELLOW PAIRED WIRES. CUT THE WHITE WIRE FLUSH WITH JACKET. STRIP END OF LOOSE WHITE WIRE 0.25 ± .06 INCH
   C. POSITION STRIPPED END OF WHITE WIRE PARALLEL TO THE STRIPPED END OF THE BLACK GND WIRE. WRAP THE DRAIN WIRE AROUND THE STRIPPED END OF THE BLACK AND WHITE WIRE 2-4 TIMES. SOLDER WIRE SPLICE AND CUT OFF END OF DRAIN FLUSH WITH SPLICE.
   D. COVER SPLICE WITH 0.5 ± .06 INCH OF SHRINK TUBING, ITEM 4, TWIST THE WHITE AND YELLOW WIRES (PREVIOUSLY SEPARATED) BACK TOGETHER FOR APPROXIMATELY (3) THREE INCHES.
2. SCREWS (2 X 3LG SELFTAPPING) ARE PART OF PLUG HOUSING AND CAMSHAFT KIT(ITEM#2).
3. REF ONLY CONTACT(DEC PART NO.12111591-27) FOR REPLACEMENT ONLY.
4. PRIOR TO SNAPPING SIDES OF PLUG HOUSING TOGETHER CARE SHOULD BE TAKEN TO ASSURE THAT ALL WIRES ARE SUFFICENTLY WITHIN HOUSING TO PREVENT PINCHING OF INDIVIDUAL STRANDS.
5. CABLE TO BE MARKED WITH PART NUMBER BC80M AND REV IN AREA SHOWN.
6. * DENOTES CAVITIES NOT TO BE USED OR DESIGNATED BY LETTERS.

| REVISION HISTORY | | |
|---|---|---|
| DATE | ECO NUMBER | REV. |
| | | |

DRD 137A

TITLE I/O CABLE (BC80M)

| DOCUMENT NUMBER | | | |
|---|---|---|---|
| SIZE | CODE | NUMBER | REV. |
| D | UA | BC80M-0-0 | C |
| SCALE — | | SHEET 2 OF 2 | |

MR