digital

861-A,B,C power controller maintenance manual

digital equipment corporation · maynard, massachusetts

861-A,B,C
power controller
maintenance manual

DEC-00-H861A-A-D

digital equipment corporation · maynard, massachusetts

1st Edition, February 1973
2nd Printing, November 1973

Copyright © 1973 by Digital Equipment Corporation

The material in this manual is for informational purposes and is subject to change without notice.

The following are trademarks of Digital Equipment Corporation, Maynard, Massachusetts:

DEC	PDP
FLIP CHIP	FOCAL
DIGITAL	COMPUTER LAB

CONTENTS

		Page
CHAPTER 1	**INTRODUCTION**	
1.1	General Description	1-1
1.2	Specifications	1-1
1.2.1	Mechanical And Environmental	1-1
1.2.2	Electrical	1-2
CHAPTER 2	**INSTALLATION**	
2.1	Site Considerations	2-1
2.2	Cables	2-1
2.2.1	Input Power	2-1
2.2.2	Remote Switching Control	2-3
2.2.3	Output Power	2-4
2.3	Grounding	2-4
2.4	Initial Operation	2-4
CHAPTER 3	**OPERATION**	
3.1	Controls And Indicators	3-1
3.1.1	Pilot Lamps	3-1
3.1.2	Circuit Breaker	3-1
3.1.3	LOCAL/OFF/REMOTE Switch	3-1
3.1.4	Remote Switching Control Bus Connectors	3-1
3.1.5	Power Outlets	3-3
3.1.6	Overtemperature Switch	3-3
CHAPTER 4	**THEORY OF OPERATION**	
4.1	General	4-1
4.2	Type 861-A Circuit Description	4-1
4.3	Type 861-B Circuit Description	4-1
4.4	Type 861-C Circuit Description	4-4
4.5	Pilot Control Board Circuit Description	4-4
CHAPTER 5	**MAINTENANCE**	
5.1	General	5-1
5.2	Preventive Maintenance	5-1
5.2.1	No Output (Circuit Breaker Tripped)	5-2
5.2.2	No Output (Circuit Breaker Not Tripped)	5-2
5.2.3	No Control	5-2

ILLUSTRATIONS

Figure No.	Title	Page
1-1	Simplified Block Diagram	1-2
2-1	Connector Wiring	2-2
2-2	Signal Bus Connector	2-3
3-1	Type 861 Power Control Panels	3-2

ILLUSTRATIONS (Cont)

Figure No.	Title	Page
4-1	861-A Simplified Circuit Schematic Diagram	4-2
4-2	861-B Simplified Circuit Schematic Diagram	4-3
4-3	861-C Simplified Circuit Schematic Diagram	4-5
5-1	Power Controller Component Identification	5-1
5-2	Troubleshooting Flow Diagram	5-3

TABLES

Table No.	Title	Page
2-1	Input Power Cables	2-1
2-2	Input Power Cable Connectors	2-2

861-A, B, C POWER CONTROLLER MAINTENANCE MANUAL

861 Power Controller

CHAPTER 1
INTRODUCTION

This manual provides information for installing, operating, and maintaining the 861-A, 861-B, and 861-C Power Controllers designed and manufactured by Digital Equipment Corporation.

1.1 GENERAL DESCRIPTION

The 861 Power Controller series provides a means for controlling and distributing power to data processing equipment.

The following versions are available to provide for a variety of input power configurations:

Version	Voltage	Hertz	Phase
861-A	90-135	47-63	Two (120° or 180° displaced)
861-B	180-270	47-63	Single
861-C	90-135	47-63	Single

All versions are contained on panels intended for mounting in racks or cabinets that accept standard 19-inch panels. Each power controller requires 5-3/16 inches of vertical mounting space and extends 8-1/4 inches into the mounting rack or cabinet.

Figure 1-1 is a simplified block diagram of the 861 Power Controller. Four basic functions are performed:

a. Control of large amounts of power by control signals of small power content.

b. Convenient distribution of primary power to controlled devices.

c. Filtering of primary power to controlled devices.

d. Automatic removal of primary power from controlled devices in case of overload or overtemperature conditions.

1.2 SPECIFICATIONS

The following specifications are included here for reference purposes only and are subject to change without notice.

1.2.1 Mechanical And Environmental

Dimensions	5 in. h x 19-1/8 in. w x 8 in. d; 0.127 mh x 0.485 mw x 0.203 md
Weight	10 lb; 4.54 kg (approx)
Cooling Method	Convection
Mounting	Rack (standard 19 in.)

Ambient Temperature	
Operating	0° to + 60°C
Storage	–40° to 71°C
Relative Humidity	95% max (no condensation)
Altitude	10,000 ft (max)

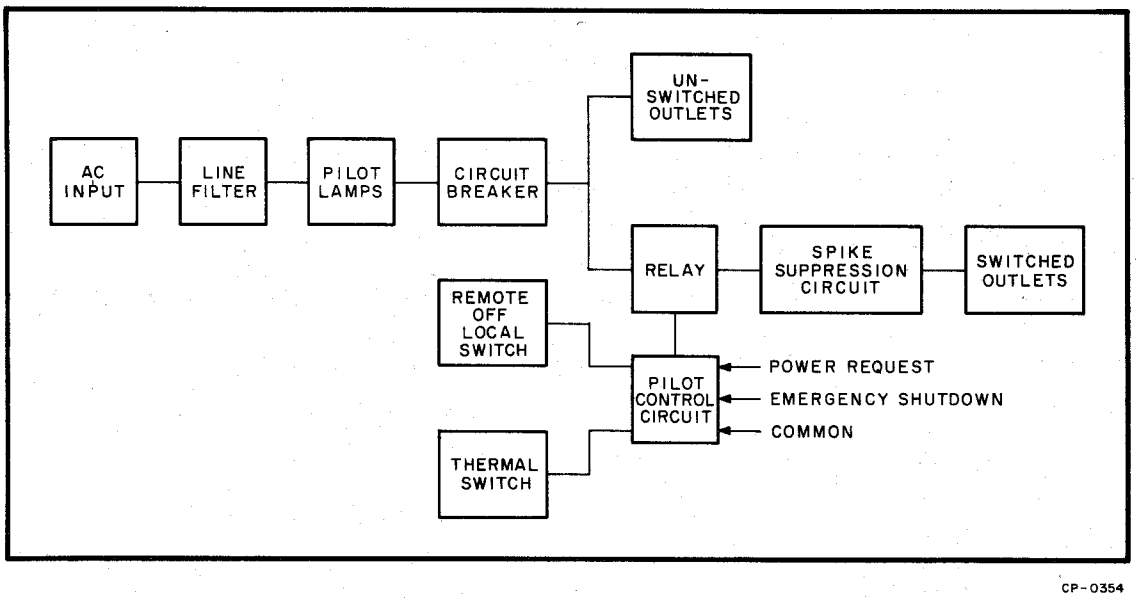

Figure 1-1 Simplified Block Diagram

1.2.2 Electrical

Input Power	
Voltage	861-A: 90 Vac – 130 Vac; 861-B: 180 Vac – 270 Vac; 861-C: 90 Vac – 135 Vac
Phase	861-A: Two (120° or 180° displaced); 861-B: Single; 861-C: Single
Frequency	47 Hz – 63 Hz
Current	861-A: 16A per pole; 861-B: 16A per pole; 861-C: 24A per pole
Power Requirements	
Full Load	861-A: 3830 VA; 861-B: 3830 VA; 861-C: 2870 VA
No Load	861-A: 10 VA; 861-B: 10 VA; 861-C: 10 VA
Inrush Current Capability	240A peak, 1 cycle
Input Overvoltage Transient	180/360V, 1 sec (power controller alone)
Activate Time	20 ms (from switch closing to power out)
Deactivate Time	10 ms (from switch opening to power out)

(continued on next page)

Input Breaker	20A delayed action, manual reset, magnetic
Thermoswitch	Opens at 160°F, automatically resets at 120°F, 49°C (exposed to ambient air external to controller).
Input Power Connector	861-A: 4-prong twist plug, NEMA* L14-20P; 861-B: 3-prong twist plug NEMA L6-20P; 861-C: 3-prong twist plug NEMA L5-30P
Hipot	2.1 kVdc for 60 sec (input and output to chassis)
Remote Switching Control Connectors	3 each: Female, AMP 1-480304-0 (DEC-12-09350-03) with AMP 61117-4 (DEC-12-09379) pins or equivalent that mate with AMP 1-480305-0 (DEC-12-09351) with AMP 61118-4 (DEC-12-09378) pins or equivalent
Input Signal Current Levels	0.5 mA (min), 10 mA (max) load worst case to each bus signal line when connected to pin 3.
Input Signal Voltage Levels	Open circuit = high; +3.0V max = low; +35V min = high. Worst case to each bus signal line in relation to pin 3.
Bus Signal Line Overload Capability	125 Vac rms @ 60 Hz, 13 kΩ impedance in relation to pin 3 for two seconds with no damage
Power Control Impedance	Inductive (diode suppressed)
Capacitance	200 pF (max)
Output	
Outlets (power)	Twelve (8 switched, 4 unswitched)
Outlet Current Ratings	861-A: 12A per outlet, 16A per branch circuit, 32A total; 861-B: 12A per outlet, 16A total; 861-C: 12A per outlet, 16A per branch circuit, 24A total
Outlet Inrush Current	861-A: 240A peak per branch circuit (1 cycle), 480A peak total (1 cycle); 861-B: 240A peak total (1 cycle); 861-C: 240A peak per branch circuit (1 cycle), 360A peak total (1 cycle)

All provisions of Underwriters Laboratories Specification UL-478 have been met in the design and manufacture of the 861-A, 861-B, and 861-C Power Controllers.

*National Electrical Manufacturers Association.

CHAPTER 2
INSTALLATION

2.1 SITE CONSIDERATIONS

The dimensions of the 861-A, B, and C power controllers are identical. Each is contained on a 19-inch panel intended for mounting on a rack or in a cabinet that accepts standard 19-inch panels. Each power controller requires 5-1/4 inches of vertical mounting space and extends approximately 8 inches into the mounting rack or cabinet. The power controller, for convenience, should be mounted as close as feasible to the units it controls.

Ambient temperature at the installation site should not exceed +60°C; relative humidity should remain below 95 percent with no condensation. For other environmental particulars, refer to Paragraph 1-2.

2.2 CABLES

Each power controller requires the following cables:

a. Input Power (provided)

b. Remote Switching Control, DEC No. 70-08288 or equivalent (not provided)

c. Output Power (provided with controlled units)

These cable assemblies are described in the following paragraphs.

2.2.1 Input Power

The type of input power cable provided depends on which version of the 861 Power Controller is being installed. Table 2-1 describes the input power cables. Cables supplied with all versions are 15 feet in length and composed of insulated stranded conductors.

Table 2-1
Input Power Cables

Controller	Conductors	Size	Coding
861-A	4	#12 AWG	Green, black, white, red
861-B	3	#14 AWG	Green, black, white
861-C	3	#12 AWG	Green, black, white

The power cable connector types provided also differ depending upon which 861 version is being installed. Table 2-2 lists the plug and receptacle types with NEMA and DEC designations. Figure 2-1 shows the power connector outlines and provides color coding information.

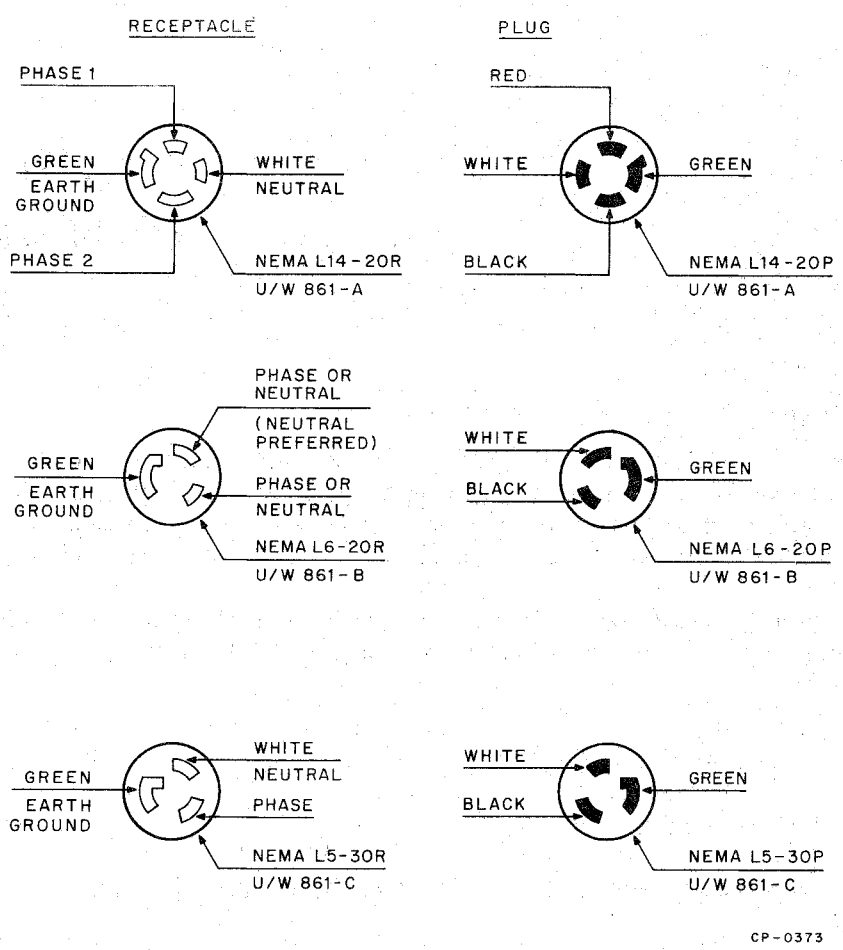

Figure 2-1 Connector Wiring

Table 2-2
Input Power Cable Connectors

861-A	4-Prong Twist Plug	#L14-20P	12-11045
	4-Prong Twist Receptacle	#L14-20R	12-11046
861-B	3-Prong Twist Plug	#L6-20P	12-11192
	3-Prong Twist Receptacle	#L6-20R	12-11191
861-C	3-Prong Twist Plug	#L5-30P	12-11193
	3-Prong Twist Receptacle	#L5-30R	12-11194

The input power cable connects to the 4-terminal block at the side of the line filter. In 861-A installations, the following connections must be made:

a. Green – N (Earth Ground)

b. Black – C (Phase 2)

(continued on next page)

c. White – B (Neutral)

d. Red – A (Phase 1)

In 861-B installations the following connections must be made:

a. Green – N (Earth Ground)

b. White – B (Phase or Neutral)

c. Black – C (Phase or Neutral)

d. No Connection – A

In 861-C installations, the following connections must be made:

a. Green – N (Earth Ground)

b. White – A (Neutral)

c. Black – B (Phase)

2.2.2 Remote Switching Control

Three female bus connectors wired in parallel, are provided on the front panel for accepting and rerouting the Remote Switching Control Bus. Each is an AMP Mate-N-Lok type AMP 1-480304-0 (DEC-12-0-350-3) with AMP G117-4 (DEC-12-09379) pins or equivalent.

Connections between units are effected with from one to three cable assemblies of 3-conductor stranded #22 AWG cable terminated at each end with male connectors. These are AMP 1-480305 (DEC-12-09351) with AMP 61118-4 (DEC-12-09378) pins or equivalent. Cable assembly details are shown on drawing DEC-70-08288. Color coding is as follows:

a. Pin 1 – Red

b. Pin 2 – Black

c. Pin 3 – Green

Remote Switching Control Bus lines connect the Signal Return, Power Request, and Emergency Shutdown lines from the processor and system devices to the power controller in systems employing compatible automatic control features. These lines are low for assertion. Figure 2-2 shows one female connector viewed from the front.

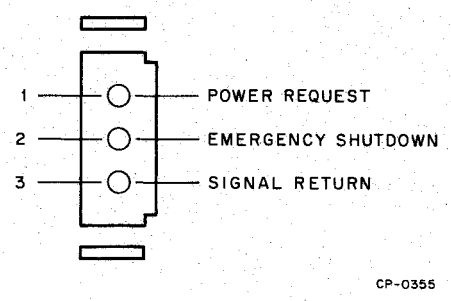

Figure 2-2 Signal Bus Connector

2.2.3 Output Power

Power is provided to controlled units from the 12 convenience outlets (8 switched, 4 unswitched). Power cables must be terminated with standard 3-prong male connectors (NEMA-5-15P) to mate with the female connectors (NEMA-5-15R) on the panel.*

2.3 GROUNDING

A good return ground is essential to proper power controller operation. A secure electrical connection must exist between the controller and the frame of the associated rack or cabinet. To accomplish this, use a 10-32 nut with serrated washer and a 10-32 bolt with serrated washer in at least one of the four mounting holes.

2.4 INITIAL OPERATION

Before applying primary power to the power controller, determine that the power at the mains is of the correct value for the particular 861 version being installed and that all cables are connected correctly.

NOTE

If the controller is being installed in a system where the Emergency Shutdown and Power Request lines are not in use, the LOCAL/OFF/REMOTE switch must be in the LOCAL position.

In systems where the Emergency Shutdown and Power Request lines (or their equivalents) are to be used, provisions must exist for connecting pin 1 to pin 3 when normal operation is desired (power supplied to the controlled devices through the switched outlets). Provision must also exist for connecting pin 3 to pin 2 if an Emergency Shutdown feature is to be implemented.

Once it has been determined that correct power exists at the mains and that all cabling is correct, and before connecting any devices to the power outlets, connect the controller power plug to the appropriate receptacle. Both pilot lamps on the panel should light. The main circuit breaker on the panel should be thrown to the ON position and the LOCAL/OFF/REMOTE switch to the LOCAL position. Measure the voltage at the switched and unswitched outlets. If the measured values are correct for the power controller in use, the power controller should be shut down, the loads connected to the switched and unswitched outlets**, and the circuit breaker thrown ON again. The system should now operate. If the circuit breaker trips or other abnormality exists, refer to the maintenance information in Chapter 5.

If the Emergency Shutdown feature is in use, check that the power controller responds properly to shutdown requests from each external device.

Also, if required, the operation of the thermally-activated overtemperature switch can be checked by holding a match in proximity to the sensing element and observing that the switched outlets are disabled. The thermal switch should reset automatically after a brief period, once the flame is removed.

---

*The 861-B version NEMA requires 6-15P for mating with NEMA 6-15R receptacles.

**Loads should be balanced between circuits 1 and 2 on 861-A and 861-C versions.

CHAPTER 3
OPERATION

3.1 CONTROLS AND INDICATORS

Figure 3-1 shows the three 861 Power Controller front panels. Each version has two pilot lamps, a circuit breaker, a 3-position toggle switch, and several power outlets. Their functions are discussed in the following paragraphs.

3.1.1 Pilot Lamps

In all 861 Power Controller versions (861-A, B, and C) both pilot lamps are lighted whenever the controller input power cable is connected to the live mains, regardless of the position of the power controller circuit breaker or LOCAL/OFF/REMOTE switch.

3.1.2 Circuit Breaker

Circuit breaker CB1, when ON, provides power to the unswitched outlets, and to the switched outlets when the LOCAL/OFF/REMOTE switch is in the LOCAL position (or in the REMOTE position and a connection exists between pins 1 and 3 of a Remote Switching Control Bus connector).* The circuit breaker opens automatically when an overload condition exists at a power outlet or within the power controller.

The following are the outlet current ratings:

Version	Per Outlet	Per Section	Total
681-A	12A	16A	32A
861-B	12A	–	16A
861-C	12A	16A	24A

3.1.3 LOCAL/OFF/REMOTE Switch

The LOCAL/OFF/REMOTE Switch provides the Remote Switching Bus with the means to control the power to the switched outlets. When the power controller is energized and the switch is in the OFF position, the switched outlets are disabled. When in the REMOTE position and connected to a bus where Power Request and Emergency Shutdown are in use (or a means of effecting connection between pin 3 and pins 1 or 2 exists), the switched outlets are enabled or disabled in accordance with conditions on the bus. When in the LOCAL position, the switched outlets are enabled only when the Emergency Shutdown signal is not asserted.

3.1.4 Remote Switching Control Bus Connectors

The three female Signal Bus connectors adjacent to the LOCAL/OFF/REMOTE switch are wired in parallel. These connectors provide a means of daisy-chaining the Remote Switching Control Bus between the controller and system devices.

*A connection between pins 2 and 3 of the Remote Switching Control Bus disables the switched outlets regardless of the position of the LOCAL/OFF/REMOTE switch.

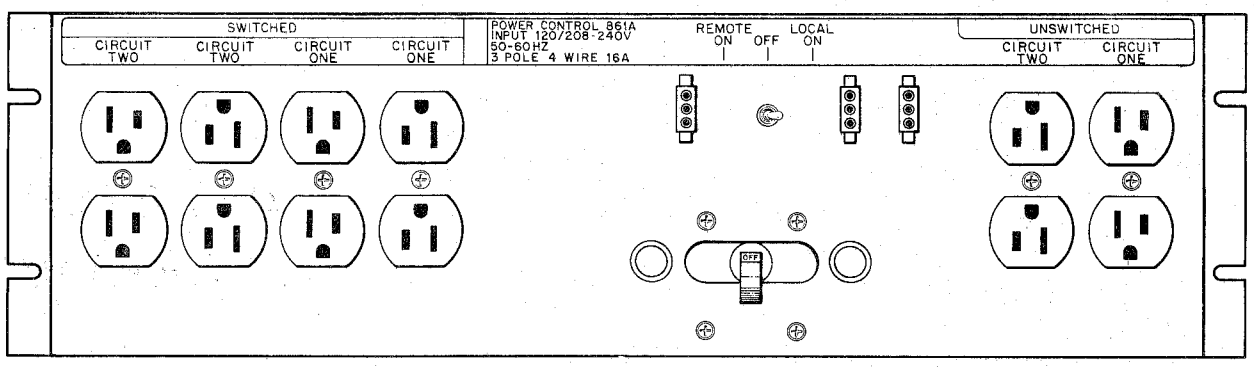

861-A

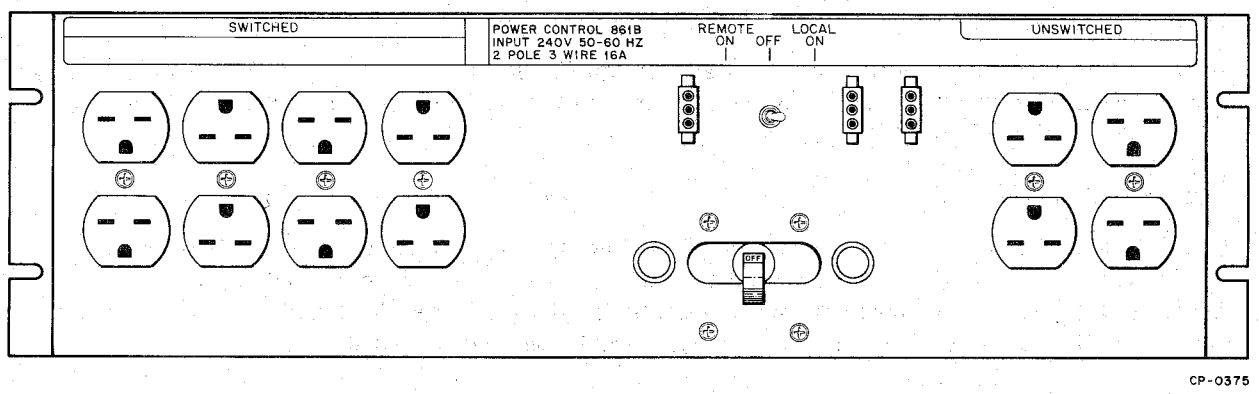

861-B

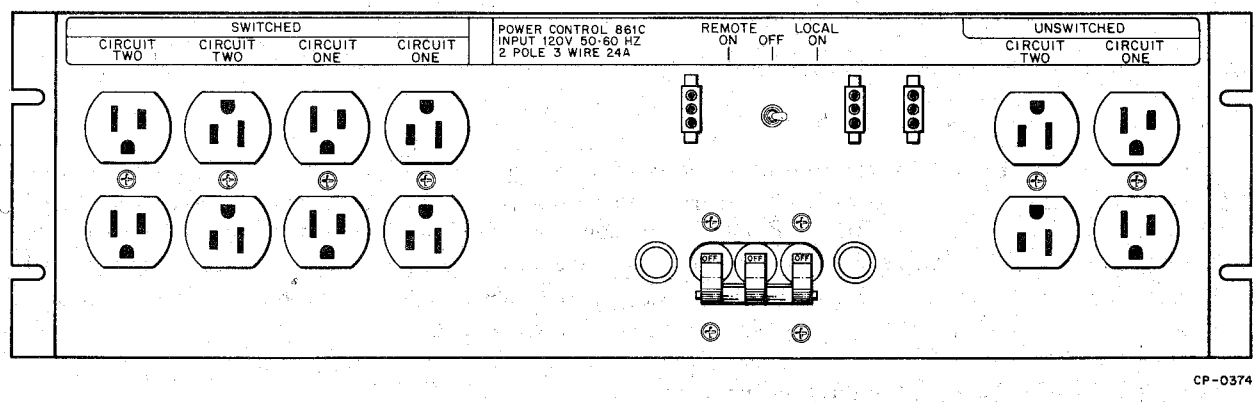

861-C

Figure 3-1 Type 861 Power Controller Panels

3.1.5 Power Outlets

Two groups of power outlets are provided on the panel. The group containing eight receptacles is the switched group. Under normal conditions, power is available at these outlets when the LOCAL/OFF/REMOTE switch is in the LOCAL position or when in the REMOTE position and a connection exists between pins 1 and 3 of the Remote Switching Control Bus connector. Power is removed from these outlets by any of the following:

a. Circuit breaker in OFF position.

b. LOCAL/OFF/REMOTE switch in the OFF position.

c. LOCAL/OFF/REMOTE switch in the REMOTE position and no connection exists between the lines associated with pins 1 and 3 of the Remote Switching Control Bus Connectors.

d. LOCAL/OFF/REMOTE switch in the REMOTE or LOCAL position and a connection exists between the lines associated with pins 3 and 2 of the Remote Switching Control Bus connectors (Emergency Shutdown signal asserted).

e. Overtemperature switch closed.

The group containing four power outlets is not controlled by the Remote Switching Control Bus. Power is available at these outlets when the circuit breaker is closed and the power controller is connected to the live mains.

3.1.6 Overtemperature Switch

A thermally-activated switch is provided to disable the controlled outlets in the event of an overtemperature condition at the power controller. The switch opens at 160°F and resets automatically when the ambient temperature at the power controller drops below 120°F.

CHAPTER 4
THEORY OF OPERATION

4.1 GENERAL

Although the three versions of the 861 Power Controller are quite similar, they are discussed separately in the following paragraphs to maintain clarity. The pilot control board is identical in each version and is therefore described but once.

4.2 TYPE 861-A CIRCUIT DESCRIPTION

Figure 4-1 is an 861-A simplified circuit schematic. The 861-A is the 90 – 135 Vac, 47 – 63 Hz, two-phase version of the power controller.

Power is applied to the terminal block mounted on the power line filter. This filter contains 0.1 μF capacitors which connect between neutral and each of the two phase lines and ground. Also contained in the filter are four chokes connected in series with each of the three lines and ground. The capacitors provide low impedance paths to ground for high frequency line components. The chokes present a high impedance to these components. If 90–135 Vac exists between phase 2 and neutral, I1 lights. Similarly, if 90–135 Vac is present between phase 1 and neutral, I2 lights. All three lines are connected to 20A elements at the circuit breaker CB1. All loads connected to the power controller (both switched and unswitched) are controlled by CB1.

If the current through any of the three lines exceeds 20A, CB1 trips, removing power from the loads. Power outlets P1 and P2 connect across the circuit breaker output. These outlets are energized (90–135 Vac) whenever the circuit breaker is closed. Each outlet line from CB1 is connected to a normally open contact on relay K1. The field coil associated with K1 is energized by 90–135 Vac from the output of CB1 if a relay on the pilot control board is closed (see Paragraph 4.5 for a description of the pilot control board).

When K1 is closed, 90–135 Vac is applied across outlets P3, P4, P5, and P6. The two 0.1 μF capacitors (C1) connected across the lines at the relay reduce the amplitude of voltage spikes at the output of the controller when switching inductive loads, thereby preventing interference to nearby electronic data processing equipment.

4.3 TYPE 861-B CIRCUIT DESCRIPTION

Figure 4-2 is a simplified circuit schematic of the 861-B, the 180–270 Vac, 47–63 Hz, single-phase version of the power controller.

Power is applied to the terminal block mounted on the power line filter. This filter contains 0.1 μF capacitors which connect between each side of the 180–270 Vac line and ground. Also contained in the filter are three chokes connected in series with each of the two lines and ground. The capacitors provide low impedance paths to ground for high frequency line components. The chokes present a high impedance to these components. If 180–270 Vac is present across the lines at the output of the line filter, both I1 and I2 (connected in series) light. Each side of the line connects to a 20A element of circuit breaker CB1. All loads connected to the power controller (both switched

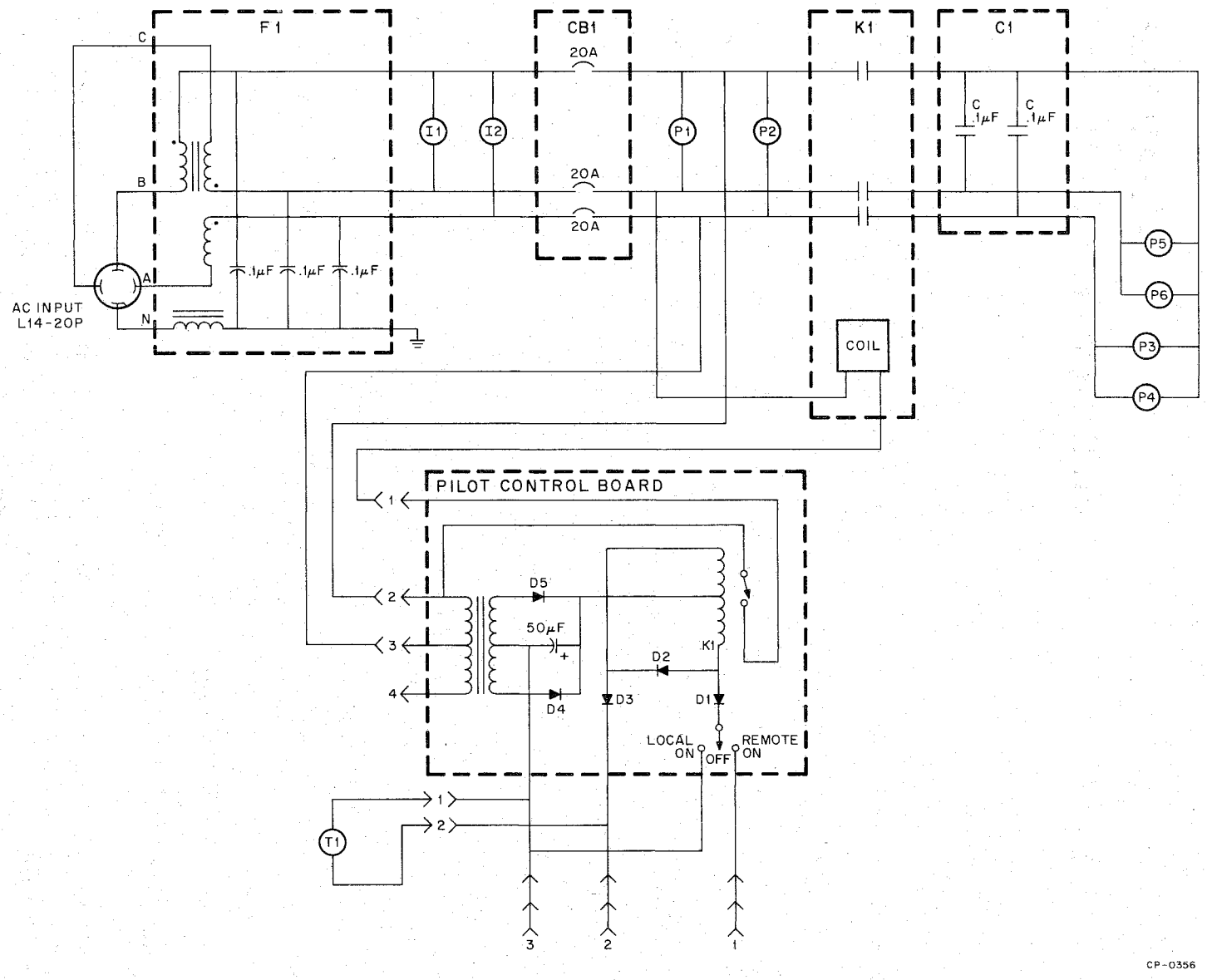

Figure 4-1 861-A Simplified Circuit Schematic Diagram

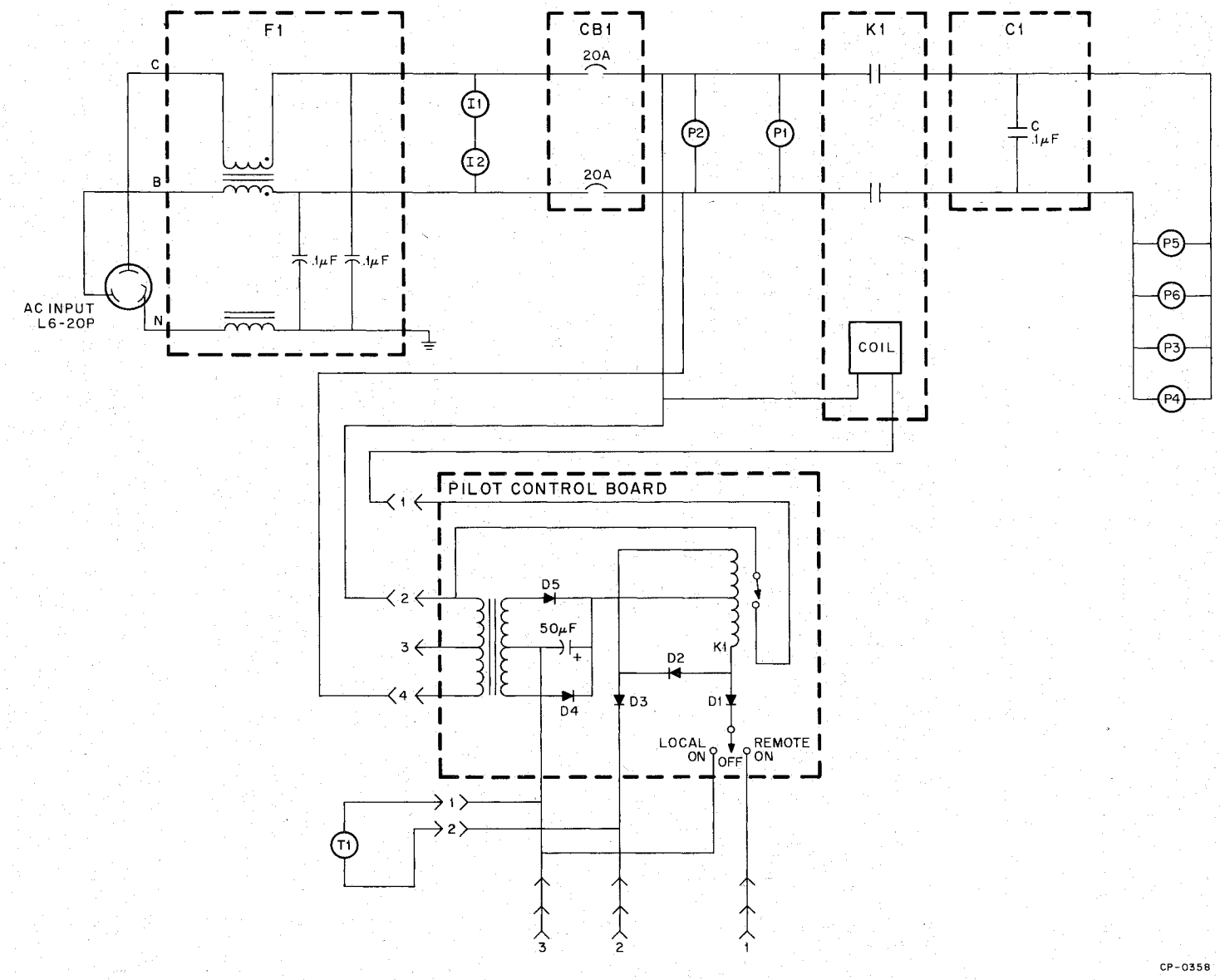

Figure 4-2 861-B Simplified Circuit Schematic Diagram

and unswitched) are controlled by CB1. If the current through either line exceeds 20A, CB1 trips, removing power from the load. Power outlets P2 and P1 connect across the output of CB1. These outlets are energized (180–270 Vac) whenever the circuit breaker is closed. Each output line from CB1 connects to a normally open contact on relay K1. The field coil associated with K1 is energized by 180–270 Vac from the output of CB1 if a relay on the pilot control board (Paragraph 4.5) is closed. When K1 is closed, 180–270 Vac is applied across outlets P3, P4, P5, and P6. The 0.1 μF capacitor (C1), connected across the lines at the relay, reduces the amplitude of voltage spikes at the output of the control when switching inductive loads, thereby preventing interference to nearby electronic data processing equipment.

4.4 TYPE 861-C CIRCUIT DESCRIPTION

Figure 4-3 is a simplified circuit schematic of the 861-C, the 90–135 Vac, 47–63 Hz, single-phase version of the power controller.

Power is applied to the terminal block mounted on the power line filter. This filter contains 0.1 μF capacitors which connect between each line and ground. Also contained in the filter are three chokes connected in series with each of the two lines and ground. The capacitors provide low impedance paths to ground for high frequency line components. The chokes present a high impedance to these components. If 90–135 Vac exists across the output of the line filter, pilot lamps I2 and I1 (connected in parallel) light. One line is connected to a 30A element at circuit breaker CB1. The remaining line is branched; each resulting line connects to a separate 20A element at CB1. All loads connected to the power controller (both switched and unswitched) are controlled by CB1. If the current through the upper (shared) line exceeds 30A, or if the current in either of the remaining lines exceeds 20A, the circuit breaker trips, removing power from the load. Power outlets P1 and P2 connect across the output of CB1. These outlets are energized (95–130 Vac) whenever the circuit breaker is closed.

Each output line from CB1 connects to a normally open contact on relay K1. The field coil associated with K1 is energized by 90–135 Vac from the output of CB1 if a relay on the pilot control board (Paragraph 4.5) is closed. When K1 is closed, 90–135 Vac is applied across outlets P3, P4, P5, and P6. The two 0.1 μF capacitors, connected across the lines at the relay, reduce the amplitude of voltage spikes when switching inductive loads, thereby preventing interference to nearby electronic data processing equipment.

4.5 PILOT CONTROL BOARD CIRCUIT DESCRIPTION

Figures 4-1, 4-2, and 4-3 show the pilot control board simplified circuit schematic. The pilot control board contains the circuitry which allows remote turn-on and emergency turn-off of the switched power outlets (P3, P4, P5, and P6) in all 861 Power Controller versions. These functions are accomplished by controlling the voltage applied to the field coil of relay K1 in the 861 Power Controller.

The circuit consists basically of a full wave rectifier loaded by the center-tapped field coil of a relay. Three control lines connect to the board. Pin 3 connects to the center-tapped secondary of the full wave rectifier transformer. Pin 2 is the disable (Emergency Shutdown) line from the signal bus, pin 1 is the enable (Power Request) line from the signal bus. Two additional lines (from the thermal switch) are connected to the lines associated with pins 3 and 2.

When the LOCAL/OFF/REMOTE switch is in the REMOTE position and pins 3 and 1 are connected, current flows through the lower portion of the center-tapped relay field coil to the full wave rectifier transformer. This action closes the relay on the pilot control board and causes an energizing potential to be applied across the field coil associated with K1 in the power controller, thereby energizing the controlled outlets P3, P4, P5, and P6. When pins 3 and 2 are connected (Emergency Shutdown is true), current flows through the lower and upper halves of the center-tapped field coil in different directions before returning to the power supply transformer. The resultant current through the field coil is less than that required for holding the relay closed. Energizing potential therefore is not present at relay K1 and power is removed from controlled outlets P3, P4, P5, and P6.

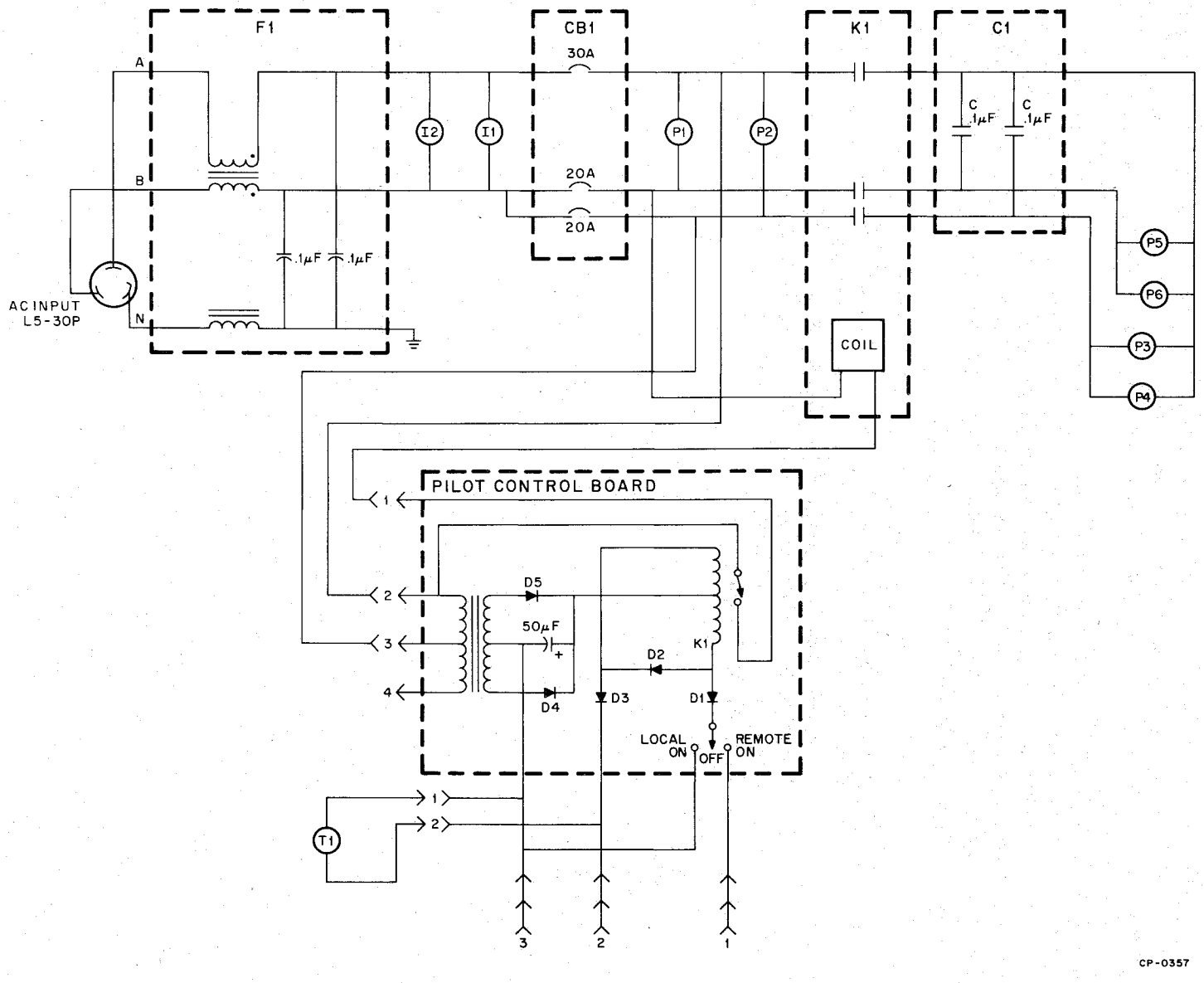

Figure 4-3 861-C Simplified Circuit Schematic Diagram

Diode D2 provides a current path in the lower section of the coil to prevent closing the relay in instances where pins 3 and 2 are connected but no connection exists between pins 1 and 3.

Closing T1 (the thermal switch) performs the same function as Emergency Shutdown (connects pins 2 and 3 together). This switch is exposed to the ambient air surrounding the power controller. Temperatures above 160°F close the switch (disabling P3, P4, P5, and P6). The switch resets automatically when the temperature drops below 120°F.

Placing the LOCAL/OFF/REMOTE switch in the LOCAL position provides a connection between pin 3 and the lower portion of the coil to energize K1, regardless of the state of the Power Request line on the signal bus. This switch position is normally used for maintenance purposes; operations on the pilot control board are exactly the same for situations where a connection is provided between pins 3 and 1 of the signal bus connector due to closing of a circuit in an external device. A connection between pins 2 and 3 disables the switched outlets regardless of the position of the LOCAL/OFF/REMOTE switch.

NOTE

The power supply that provides the potential for closing the relay need not be returned to ground. It can be operated in a floating configuration where a connection between pins 3 and 2 (as by the thermal switch or Emergency Shutdown) disables the switched outlets and a connection between pins 1 and 3 (Power Request) enables the switched outlets.

CHAPTER 5
MAINTENANCE

5.1 GENERAL

The 861 Power Controllers are constructed of high quality components (Figure 5-1) and can therefore be expected to provide trouble-free performance for extensive periods. No adjustment or alignment procedures exist. No special tools or equipment are required and no fuses are utilized. A 5000 Ω/V multimeter is adequate for accomplishing all voltage and resistance measurements.

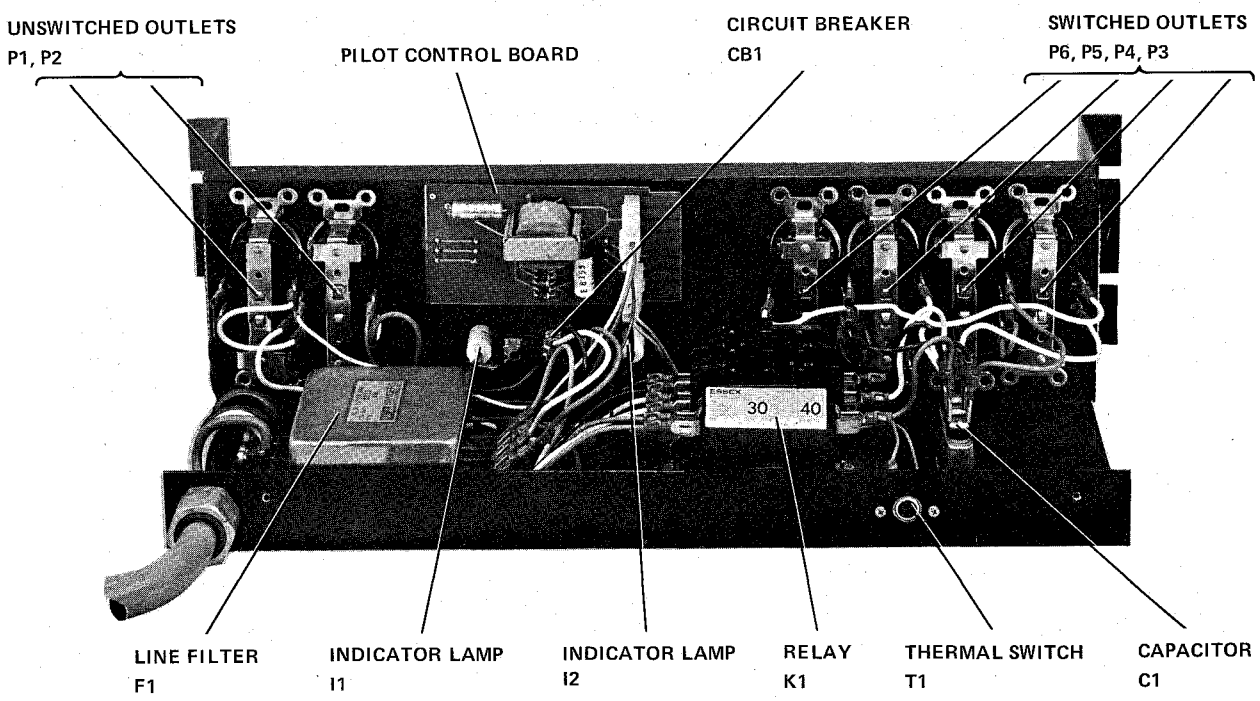

Figure 5-1 Power Controller Component Identification

5.2 PREVENTIVE MAINTENANCE

Preventive maintenance procedures for the power controllers consist of periodic cleaning and inspection to detect any mechanical damage to wiring and components or evidence of overheating, etc. The operation of the thermal switch can be checked by holding a flame close to the sensing element while the controller is operating and observing that the switched outlets become disabled. Emergency Shutdown response to devices on the signal bus can also be

checked as a preventive maintenance procedure by connecting together pins 3 and 2 of the Remote Switching Control Bus. Should a failure occur, proceed as described in the following paragraphs.

NOTE

Dangerous potentials exist within the power controller. Perform all measurements with properly insulated meter leads. Remove the main power plug before attaching or removing test leads.

Failures within the power controller occur in one of three failure modes:

a. No output (circuit breaker trips)

b. No output (circuit breaker not tripped)

c. No control (including Emergency Shutdown and overtemperature)

The flow chart in Figure 5-2 presents a logical troubleshooting sequence for the three failure modes.

5.2.1 No Output (Circuit Breaker Tripped)

If correct power is available from the mains, a tripped circuit breaker can be caused only by: a faulty circuit breaker, a low resistance load, or a low resistance within the power controller caused by component failure.

5.2.2 No Output (Circuit Breaker Not Tripped)

Failures within this mode are caused by bad cable connections, open components in the line filter, improper relay operation, or a faulty circuit breaker.

5.2.3 No Control

Control failures are associated only with the switched outlets; the input circuits, line filter and circuit breaker are, therefore, not involved. These failures are caused by bad cable connections, relays, and diodes. A faulty thermal switch T1 can cause loss of control. Control problems can be isolated to either the internal or external circuit by use of the LOCAL/OFF/REMOTE switch. With the switch in the LOCAL position, if T1 is operating properly, the switched outlets should be enabled. If not, the problem is within the controller circuitry. If operation is normal when in LOCAL, check the control signals from the external device.

Once the failing component is identified it should be replaced with one of equal or better quality. Drawing UA-801-0-0 of the Engineering Drawing Set provides a complete list of 861 Power Controller components.

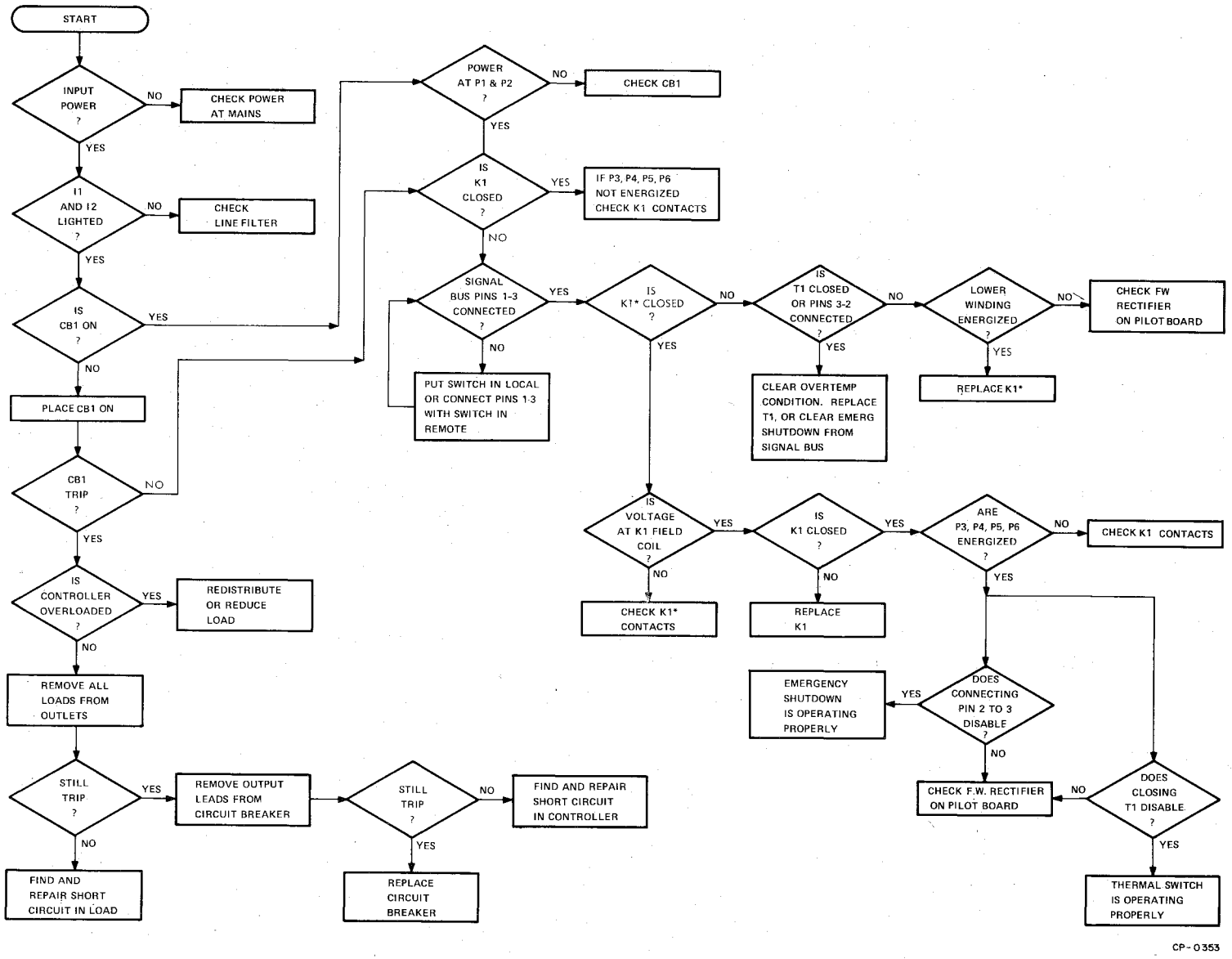

Figure 5-2 Troubleshooting Flow Diagram

861-A, B, C POWER CONTROL
MAINTENANCE MANUAL
DEC-00-H861A-A-D

READER'S COMMENTS

Your comments and suggestions will help us in our continuous effort to improve the quality and usefulness of our publications.

What is your general reaction to this manual? In your judgment is it complete, accurate, well organized, well written, etc.? Is it easy to use? _____

What features are most useful? _____

What faults do you find with the manual? _____

Does this manual satisfy the need you think it was intended to satisfy? _____

Does it satisfy *your* needs? _____ Why? _____

Would you please indicate any factual errors you have found. _____

Please describe your position. _____

Name _____ Organization _____

Street _____ Department _____

City _____ State _____ Zip or Country _____

Fold Here

Do Not Tear - Fold Here and Staple

FIRST CLASS
PERMIT NO. 33
MAYNARD, MASS.

BUSINESS REPLY MAIL
NO POSTAGE STAMP NECESSARY IF MAILED IN THE UNITED STATES

Postage will be paid by:

Digital Equipment Corporation
Technical Documentation Department
146 Main Street
Maynard, Massachusetts 01754