ILLUSTRATED PARTS BREAKDOWN

BA11F MOUNTING BOX

HOW TO USE THE IPB

GENERAL
This IPB is compiled following the organization and nomenclature of the engineering drawing structure.

MAJOR ASSEMBLY LOCATOR
The Major Assembly Locator (first illustration) is an index that provides a description and a figure reference for all illustrations used in this manual.

INDENTED PARTS LIST
This manual identifies each assembly being broken down (figure reference callout), and all parts of that assembly. Further breakdown of an assembly is shown by an asterisk (*) preceding the item callouts in the Description Column. The number of asterisks preceding an item is used to denote the subordination of that item with respect to the Major Assembly. A single asterisk preceding an item description indicates that the item is part of the major assembly being illustrated. Items that are subordinate to single asterisks items, are denoted by two asterisks (**) and immediately follow the related single asterisk item. Additional asterisks are used, as required, to denote further subordination. This system of part identification, provides a means for the user to identify the next higher assembly item and make alternate selections for parts when the required replacement part or assembly is not immediately available.

COLUMN CALLOUT DESCRIPTION
Figure & Item — Indicates the figure number and item number of each part.

Description — Lists the name of the part and pertinent specifications (when required). Asterisks preceding the description denote the subordination of the part to the next higher assembly.

DEC Part No. — Lists the DEC part ordering number. A blank in this column indicates a DEC part number was not assigned at the time of publication.

ECO Cut-In — The notation at the top of this column indicates the ECO level of the system (option), at which the IPB was initially prepared. Subsequent ECO level designations, that modify existing parts or add new parts to the device, are inserted in the ECO Cut-In column next to the part that is added or modified. A bracket ([) preceding the item description is used to indicate the parts affected by ECO's.

Vendor Code/Part No. — Indicates vendor parts that are not stocked by DEC. Refer to the Field Service Spares Catalog (vendor part number to DEC part number) for the vendor code cross-reference.

Used On Code — Letters in this column correspond to the variation codes assigned in Figure 1. Parts with an Alpha notation(s) are used only in those option variations. A blank indicates that the part is used on all option variations.

Ref Fig No. — A cross reference between illustrations. For each Major Assembly, the number in this column denotes the figure of the next higher assembly. For all subassemblies, the number in this column denotes the figure showing additional detailed breakdown.

SYMBOL USAGE
Hardware Designators — Alpha designators for screws (S), washers (W), nuts (N), and retaining rings (R) are inserted after the item number callouts on the illustration when stacked item numbers are used.

Attaching Hardware — The @ symbol is inserted before any part that is used as attaching hardware. Attaching hardware is denoted as those parts that are not an integral part of the referenced assembly.

(NFR) Not Field Repairable — The (NFR) symbol is inserted after any assembly that is not to be field dismantled.

Other Symbols — Any other symbols that are required for kits, accessories, etc., will be explained and appear as part of the item description.

REVISION HISTORY

PRINTING	ECO LEVEL		DATE	PAGES AFFECTED
3rd Printing	BA11F	00000-00028	10-13-76	This 3rd Printing **EK-BA11F-IP-003**
	70-08695	00001-00002		**SUPERSEDES** 2nd Printing **EK-BA11F-IP-002**
	70-08762	00001-00001		
	70-10253	00002-00002		
	70-10351	00002-00003		

Copyright © 1974, 1975, 1976 by Digital Equipment Corporation

DEC reserves the right, without notice, to make substitutions and modifications in the specifications of products documented in this manual and further reserves the right to withdraw any of these products from the market without notice.

DEC is not responsible for errors which may appear in the technical description (including illustrations and photographs) of the products covered by this manual.
None of the descriptions contained in this manual imply the granting of any license whatsoever to make, use or sell equipment constructed in accordance therewith.

Printed in U.S.A.

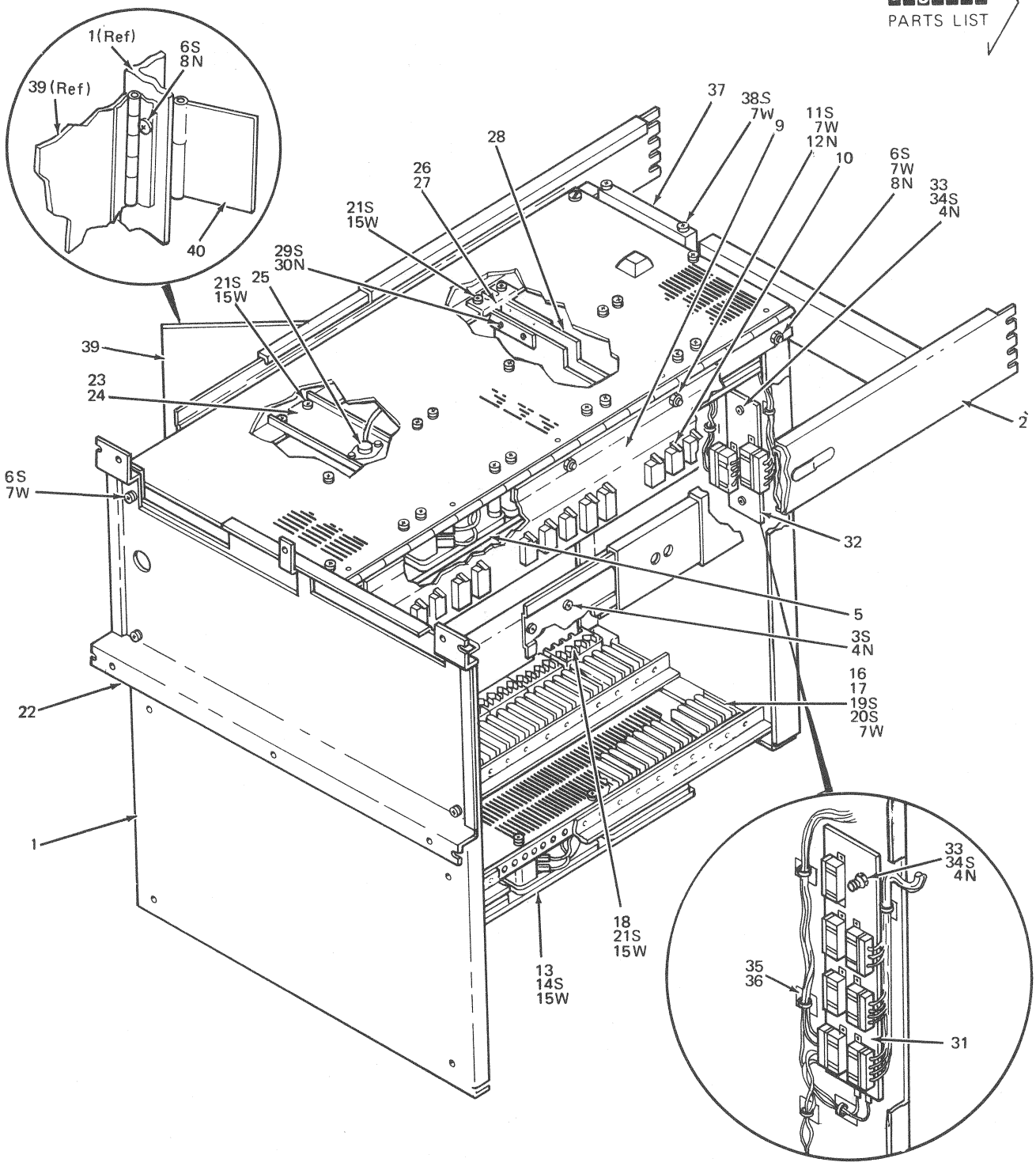

Figure 1. BA11F Mounting Box Assembly

FIG & ITEM NO.	DESCRIPTION	DEC PART NO. L	ECO CUT-IN BA11-F 00000	USED ON CODE	VENDOR CODE	VENDOR PART NO.	REF FIG NO.
1—	BA11-F MOUNTING BOX ASSEMBLY						
	Code A — Used on Model BA11-FA (Basic 11/45)	BA11-FA		A			
	Code B — Used on Model BA11-FC (Basic 11/40)	BA11-FC		B			
1	*Chassis	74-09215-00					
2	*CHASSIS SLIDE ASSEMBLY (23" Travel)	12-09152-02					
3	*Screw, Phl. Hd. Pan No. 10-32 x 1/2	90-06073-01					
4	*Nut, Kep No. 10-32	90-06565-00					
5	*FAN ASSEMBLY (TOP)	70-08695-00					2
6	*Screw, Phl. Pan Hd. No. 8-32 x 3/8	90-06037-01					
7	*Washer, Int. Tooth No. 8	90-06634-00					
8	*Nut, Kep No. 8-32	90-06563-00					
9	*Plate, Power Support	74-09672-00		B			
10	*POWER DISTRIBUTION BOARD ASSEMBLY	54-09944-00		B			
11	*Screw, Phl. Pan Hd No. 8-32 x 1/2	90-06039-01					
12	*Nut, Hex No. 8-32	90-06561-00		B			
13	*FAN ASSEMBLY (BOTTOM)	70-08762-00		A			3
14	*Screw, Phl. Pan Hd. No. 4-40 x 3/8	90-06014-01					
15	*Washer, Int. Tooth No. 4	90-06632-00					
16	*Card Guide	12-10826-00					
17	*Card Guide (Rework) (added)	74-10636-00	00014				
18	*Extractor and Card Guide	12-10699-00					
19	*Screw, Phl. Pan Hd. No. 8-32 x 5/16 (Note: Used to Fasten Bottom Row Card Guides)	90-06036-01					
20	*Screw, Phl. Pan Hd. No. 8-32 x 1/4 (Note: Used to Fasten Top Row Card Guides)	90-06035-01					
21	*Screw, Phl. Pan Hd. No. 4-40 x 3/8 (Note: Used to Fasten Top and Bottom Rows Extractor and Card Guides)	90-06011-01					
22	*Bracket, Bezel Mounting	74-09272-00					
23	*THERMAL CUTOUT BRACKET ASSEMBLY	70-08769-00		A			
24	**Bracket, Thermal Cutout	74-09503-00		A			
25	**Switch, Thermal	12-10902-00		A			
26	*CABLE PROTECTION BRACKET ASSEMBLY (added)	70-09097-00	00003	A			
27	**Bracket, Cable Protection	74-10580-00		A			
28	**Board, Glass Epoxy	74-10607-00		A			
29	**Screw, Fil. Hd. Nylon No. 6-32 x .38	90-06430-06		A			
30	**Nut, Hex Nylon	90-07883-00		A			
31	*CORE MEMORY POWER DISTRIBUTION BOARD	54-09903-00		A			
32	*EXPANDER BOX AC STRIP ASSEMBLY	70-08911-00		B			
33	*Spacer, 1/4 OD x 3/8	90-08967-00					
34	*Screw, Phl. Pan Hd. No. 10-32 x 3/4	90-06075-01					
35	*Mount, Adhesive Back (added)	90-08264-00	00007				
36	*Tie Wrap	90-08770-00	00007				
37	*Cable Strap (Obsolete)	74-09412-00					
	*Cable Clamp and Strap (added)	12-11215-00	00009				
38	*Screw, Phl. Pan Hd. No. 8-32 x 1-1/8	90-07854-01					
39	*Door, Left Side	74-09402-00					
40	*Retainer, Door Hinge	74-09720-00					

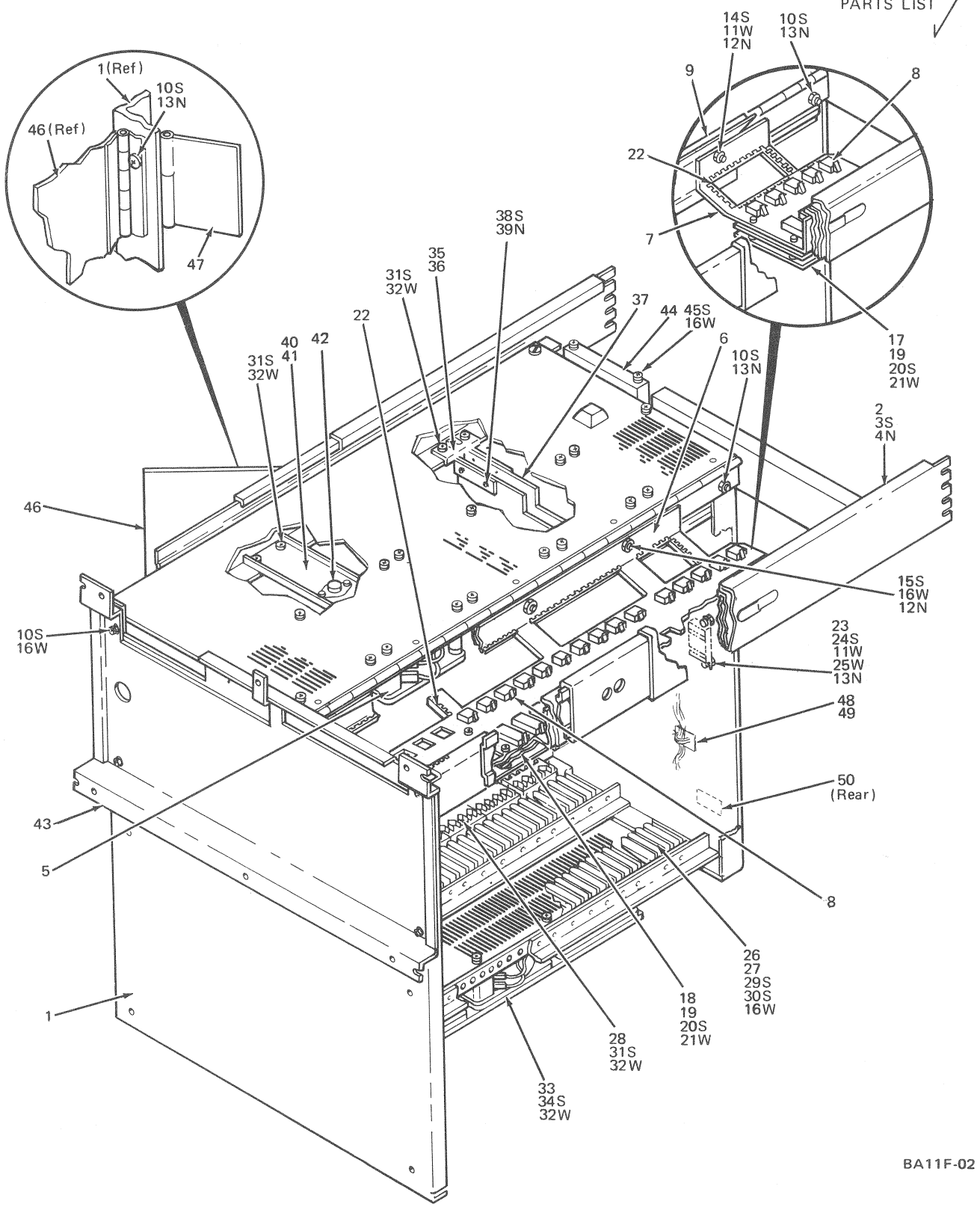

Figure 1A. BA11F Mounting Box Assembly

FIG & ITEM NO.	DESCRIPTION	V DEC PART NO.	ECO CUT-IN BA11-F 00015	USED ON CODE	VENDOR CODE	VENDOR PART NO.	REF FIG NO.
1A–	BA11-F MOUNTING BOX ASSEMBLY						
	Code A – Used on Model BA11-FA (Basic 11/45)	BA11-FA		A			
	Code B – Used on Model BA11-FC (Basic 11/40)	BA11-FC		B			
1	*Chassis	74-09215-00					
2	*CHASSIS SLIDE ASSEMBLY (23" Travel)	12-09152-02					
3	*Screw, Phl. Pan Hd. No. 10-32 x 1/2	90-06073-01					
4	*Nut, Keps No. 10-32	90-06565-00					
5	*FAN ASSEMBLY (TOP)	70-08695-00					2
6	*Panel, Power Distribution (11/40)	74-11220-00		B			
7	*Panel, Power Distribution (11/45)	74-11221-00		A			
8	*POWER DISTRIBUTION BOARD ASSEMBLY	54-10590-00					
9	*Support, Plate	74-11460-00		A			
10	*Screw, Phl. Pan Hd. No. 8-32 x 3/8	90-06037-01					
11	*Washer, Ext. Tooth No. 8	90-08072-00					
12	*Nut, Hex No. 8-32	90-06561-00					
13	*Nut, Keps No. 8-32	90-06563-00					
14	*Screw, Phl. Pan Hd. No. 8-32 x 9/16	90-07854-01		A			
15	*Screw, Phl. Pan Hd. No. 8-32 x 1/2	90-06039-01					
16	*Washer, Int. Tooth No. 8	90-06634-00					
17	*Guard, Knuckle (11/45)	74-11364-00		A			
18	*Guard, Knuckle (11/40)	74-11363-00		B			
19	*Spacer, 1/4 AF x 3/4 No. 6-32	90-06859-00					
20	*Screw, Phl. Pan Hd. No. 6-32 x 3/8	90-06022-01					
21	*Washer, Int. Tooth No. 6	90-06633-00					
22	*Grommet, Nylon	90-07622-00					
23	*Spacer 3/8 AF x 1/4 No. 8	90-06818-00					
24	*Screw, Phl. Pan Hd. No. 8-32 x 3/4	90-06041-01					
25	*Washer, Flat .500 O.D. x .187 I.D.	90-06662-00					
26	*Card Guide	12-10826-00					
27	*Card Guide (Rework)	74-10636-00					
28	*Extractor and Card Guide	12-10699-00					
29	*Screw, Phl. Pan Hd. No. 8-32 x 5/16 (Used to Fasten Bottom Row Card Guides)	90-06036-01					
30	*Screw, Phl. Pan Hd. No. 8-32 x 1/4 (Used to Fasten Top Row Card Guides)	90-06035-01					
31	*Screw, Phl. Pan Hd. No. 4-40 x 3/16 (Used to Fasten Top and Bottom Rows Extractor and Card Guides)	90-06011-01					
32	*Washer, Int. Tooth No. 4	90-06632-00					
33	*FAN ASSEMBLY (Bottom)	70-08762-00					3
34	*Screw, Phl. Pan Hd. No. 4-40 x 5/8	90-06014-01					
35	*CABLE PROTECTION BRACKET ASSEMBLY	70-09097-00		A			
36	**Bracket, Cable Protection	74-10580-00		A			
37	**Board, Glass Epoxy	74-10607-00		A			
38	**Screw, Fil. Hd. Nylon No. 6-32 x .38	90-06430-06		A			
39	**Nut, Hex Nylon	90-07883-00		A			
40	*THERMAL CUTOUT BRACKET ASSEMBLY	70-08769-00		A			
41	**Bracket, Thermal Cutout	74-09503-00		A			
42	**Switch, Thermal	12-10902-00		A			
43	*Bracket, Bezel Mounting	74-09272-00					
44	*Cable Clamp and Strap	12-11215-00					
45	*Screw, Phl. Pan Hd. No. 8-32 x 1-1/8	90-07854-01					
46	*Door, Left Side	74-09402-00					
47	*Retainer, Door Hinge (Deleted)	74-09720-00	00019				
48	*Mount, Adh. Back	90-08264-00					
49	*Tie Wrap	90-07880-00					
50	*Decal, Mechanical Status	74-11325-00					

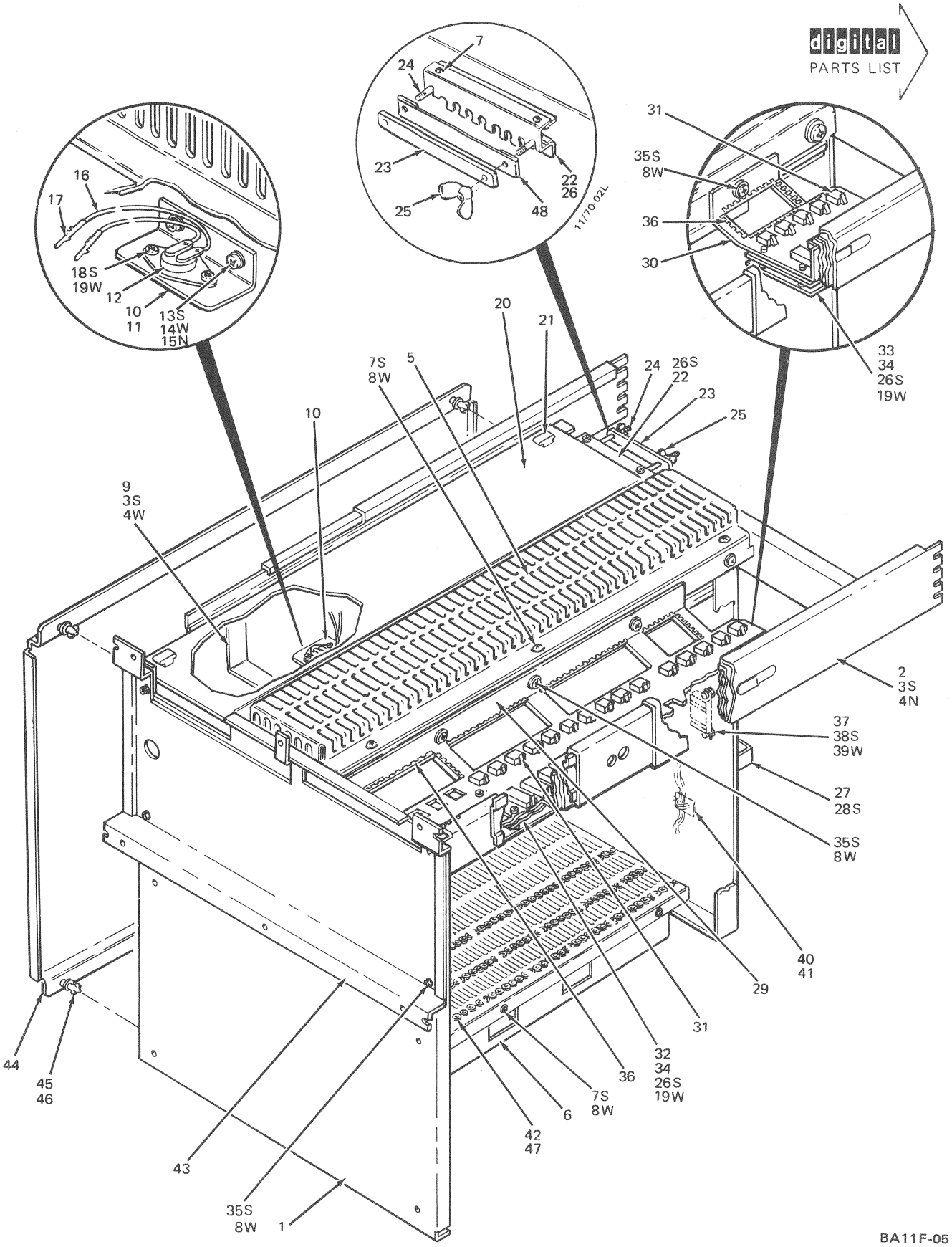

Figure 1B. BA11F Mounting Box Assembly

FIG & ITEM NO.	DESCRIPTION	AD DEC PART NO.	ECO CUT-IN BA11-F 00023	USED ON CODE	VENDOR CODE	VENDOR PART NO.	REF FIG NO.
1B–	BA11-F MOUNTING BOX ASSEMBLY						
	Code A—Used on Model BA11-FA (Basic 11/45)	BA11-FA		A			
	Code B—Used on Model BA11-FB (Expander)	BA11-FB		B			
	Code C—Used on Model BA11-FC (Basic 11/40)	BA11-FC		C			
	Code D—Used on Model BA11-FD (Field Expansion Box Assy. 115V)	BA11-FD		D			
	Code E—Used on Model BA11-FE (Field Expansion Box Assy. 230V)	BA11-FE		E			
	Code F—Used on Model BA11-FH (Field Expansion BA11-FD with +20 Vdc Regulator)	BA11-FH		F			
	Code G—Used on Model BA11-FJ (Field Expansion BA11-FE with +20 Vdc Regulator)	BA11-FJ		G			
	Code H—Used on Model BA11-FK (Basic 11/70)	BA11-FK		H			
1	*Chassis	70-10083-00					
2	*Chassis Slide Assembly (23" Travel) (1 Pr.)	12-09152-02					
[3	*Screw, Phl. Pan Hd. No. 10-32 x .5 (Deleted)	90-06073-01					
[	*Screw, Phl Pan Hd. No. 10-32 x .38 (Added)	90-06071-03	00027				
4	*Nut, Kep No. 10-32	90-06565-00					
5	*FAN ASSEMBLY (TOP)	70-10253-00					4
6	*FAN ASSEMBLY (BOTTOM)	70-10351-00					5
7	*Screw, Self Tap No. 8-32 x .38	90-06418-01					
8	*Washer, Int. Tooth No. 8	90-06634-00					
9	*Trough, Support	74-12297-00					
10	*THERMAL SWITCH BRACKET ASSEMBLY	70-10082-00		A,H			
11	**Bracket, Thermal Switch	74-12292-00		A,H			
12	**Switch, Thermal	12-10902-00		A,H			
13	**Screw, Phl Pan Hd. No. 2-56 x .19	90-06000-01		A,H			
14	**Washer, Split Lock No. 2	90-06686-00		A,H			
15	**Nut, Hex No. 2-56	90-06555-00		A,H			
16	**Wire, No. 22 AWG Strd. Blk-Red TWP	91-07420-02		A,H			
17	**Pin, Male	12-09378-03		A,H			
18	*Screw, Phl. Pan Hd. No. 6-32 x .25	90-06020-01		A,H			
19	*Washer, Int. Tooth No. 6	90-06633-00		A,H			
20	*Cover, Table Trough	74-12587-00					
21	*Squeeze Release	90-09537-00					
22	*Clamp, Cable	74-13106-00					
23	*Bar, Cable	74-13107-00					
24	*U/Bolt, Cable	74-13108-00					
25	*Nut, Wing No. 8-32	90-06571-00					
26	*Screw, Phl. Pan Hd. No. 6-32 x .38	90-06022-01					
27	*Clamp, Cable	74-13130-00					
28	*Screw, Phl. Pan Hd. No. 10-32 x .38	90-06071-01					
29	*Panel, Power Distribution (11/40)	74-11220-00		BCDEFG			
30	*Panel, Power Distribution (11/45)	74-11221-00		A			
31	*POWER DISTRIBUTION BOARD ASSEMBLY	54-10590-00		ABCDEFG			
32	*Guard, Knuckle	74-11363-00		BCDEFG			
33	*Guard, Knuckle	74-11364-00		A			
34	*Spacer, .25 AF x .75 No. 6-32	90-06859-00		ABCDEFG			
35	*Screw, Phl. Pan Hd. No. 8-32 x .38	90-06037-01					
36	*Grommet, Nylon	90-07622-00					
37	*Spacer, .38 AF x .25 No. 8	90-06818-00					
38	*Screw, Phl. Pan Hd. No. 8-32 x .75	90-06041-01					
39	*Washer, Ext, Tooth No. 8	90-08072-00					
40	*Mount, Adh. Back	90-08264-00					
41	*Tie Wrap	90-07880-00					
42	*Card Guide (Doughnut Type)	12-11630-00					

FIG & ITEM NO.	DESCRIPTION	DEC PART NO.	ECO CUT-IN BA11-F 00023	USED ON CODE	VENDOR CODE	VENDOR PART NO.	REF FIG NO.
1B–							
43	*Bracket, Bezel Mounting	74-09272-00		A,C,H			
44	*Cover, Left Side	74-12585-00					
45	**Fastener, 1/4 Turn	90-08198-00					
46	**Ring, 1/4 Turn Fastener	90-08200-00					
47	*Card Guide (Vertical) (Added)	74-14125-00	00025				
48	*Clamp, Unibus Cable (Added)	70-11033-00	00026				
	DECALS (Not Shown)						
	Decal, NFPA Type (UL)	53-09413-00					
	Decal, EDP Equip. (UL)	53-09414-00					
	Decal, Mechanical Status	74-11325-00					
	Decal, Expander Box	74-11324-00		BDEFGH			
	Decal, 115V 60 Hz	74-06960-00					
	Decal, 115V 50 Hz	74-06789-00					
	Decal, P7	74-00972-00					
	Decal, Card Guide Slot Identifier (Added)	36-13281-02	00028				

FIG & ITEM NO.	DESCRIPTION	DEC PART NO.	ECO CUT-IN 70-08695 00001	USED ON CODE	VENDOR CODE	VENDOR PART NO.	REF FIG NO.
2–	FAN ASSEMBLY (TOP)	70-08695-00					1,1A
1	*FAN MOUNTING PLATE ASSEMBLY (Includes Hinge and Fasteners)	74-09157-00					
2	**Fastener, 1/4 turn	90-07947-00					
3	**Retaining Ring, Fastener	90-08200-00					
4	*Bumper, Rubber Black	12-09750-01					
5	*Fan (IMC, Rotron, Howard)	12-09403-01					
6	*Clip, Mounting (For IMC Fan only)	90-09165-00					
7	*Screw, Phl. Pan Hd. No. 6-32 x 5/8 (For IMC, Rotron Fans only)	90-06025-01					
8	*Washer, Int. Tooth Lock No. 6	90-06633-00					
9	*Spacer, No. 6-32 x 1" (For Rotron Fan only)	90-06862-00					
10	*Nut, Kep No. 6-32 (For Rotron, Howard Fans only)	90-06560-00					
11	*Screw, Phl. Pan Hd. No. 6-32 x 1/2 (For Howard Fan only)	90-06024-01					
12	*Housing, Fastab Socket	12-10820-01					
13	*Terminal, Fastab	12-10820-02					
14	*Terminal, Pin Contact	12-09378-01					
15	*Plate, Protection	74-09669-00					

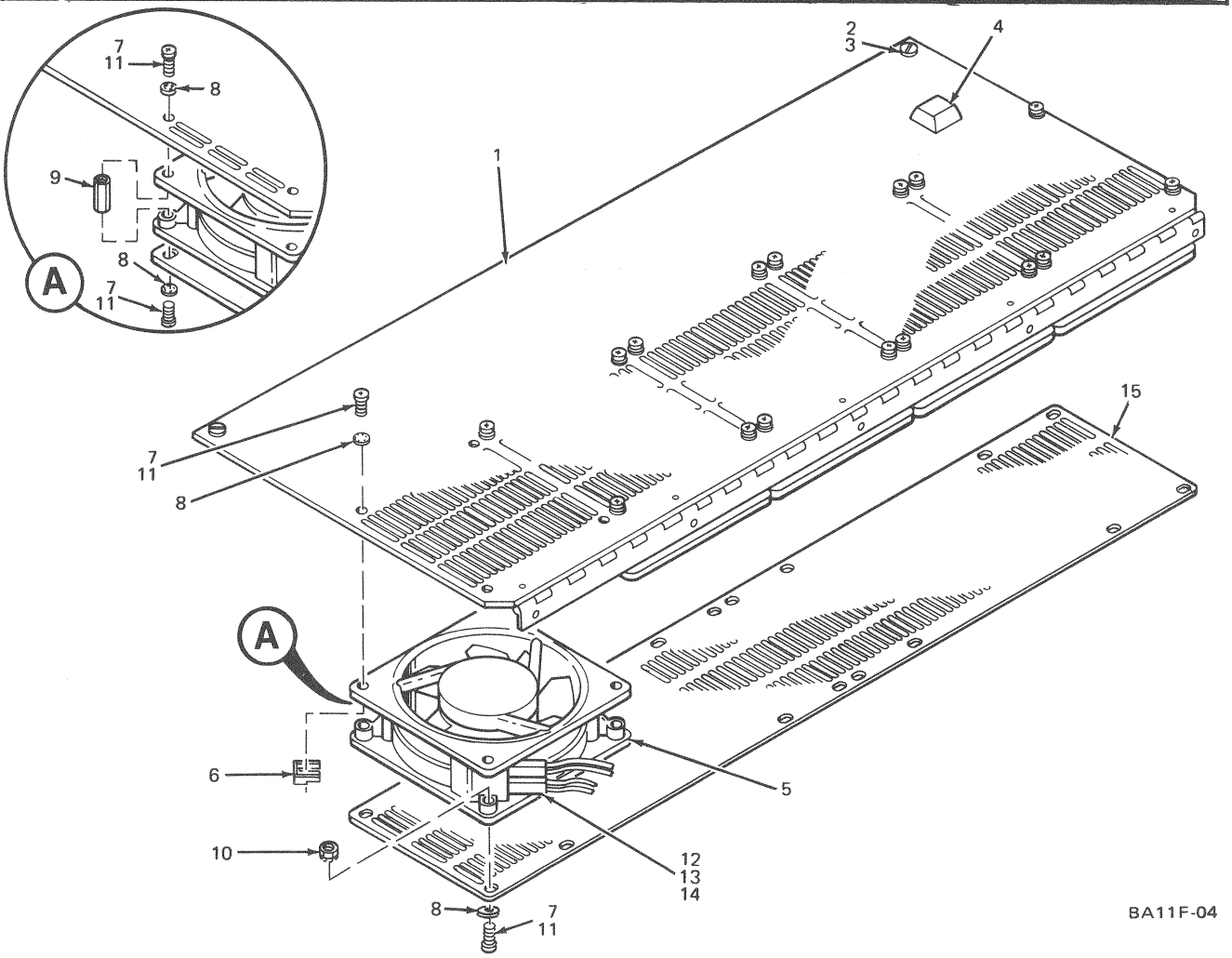

Figure 2. Fan Assembly (Top)

FIG & ITEM NO.	DESCRIPTION	C DEC PART NO.	ECO CUT-IN 70-08762 00001	USED ON CODE	VENDOR CODE	VENDOR PART NO.	REF FIG NO.
3–	FAN ASSEMBLY (BOTTOM)	70-08762-00					1,1A
1	*Bracket, Fan Mounting	74-09554-00					
2	*Fan (IMC, Rotron, Howard)	12-09403-01					
3	*Clip, Mounting (For IMC Fan only)	90-09165-00					
4	*Screw, Phl. Pan Hd. No. 6-32 x 5/8 (For IMC, Rotron Fans only)	90-06025-01					
5	*Washer, Int. Tooth Lock	90-06633-00					
6	*Spacer 1/4 AF No. 6-32 x 1" (For Rotron Fan only)	90-06862-00					
7	*Nut, Kep No. 6-32 (For Rotron, Howard Fans only)	90-06560-00					
8	*Housing, Fastab Socket	12-10820-01					
9	*Terminal, Fastab	12-10820-02					
10	*Terminal, Pin Contact	12-09378-01					
11	*Screen, Fan	74-11648-00					

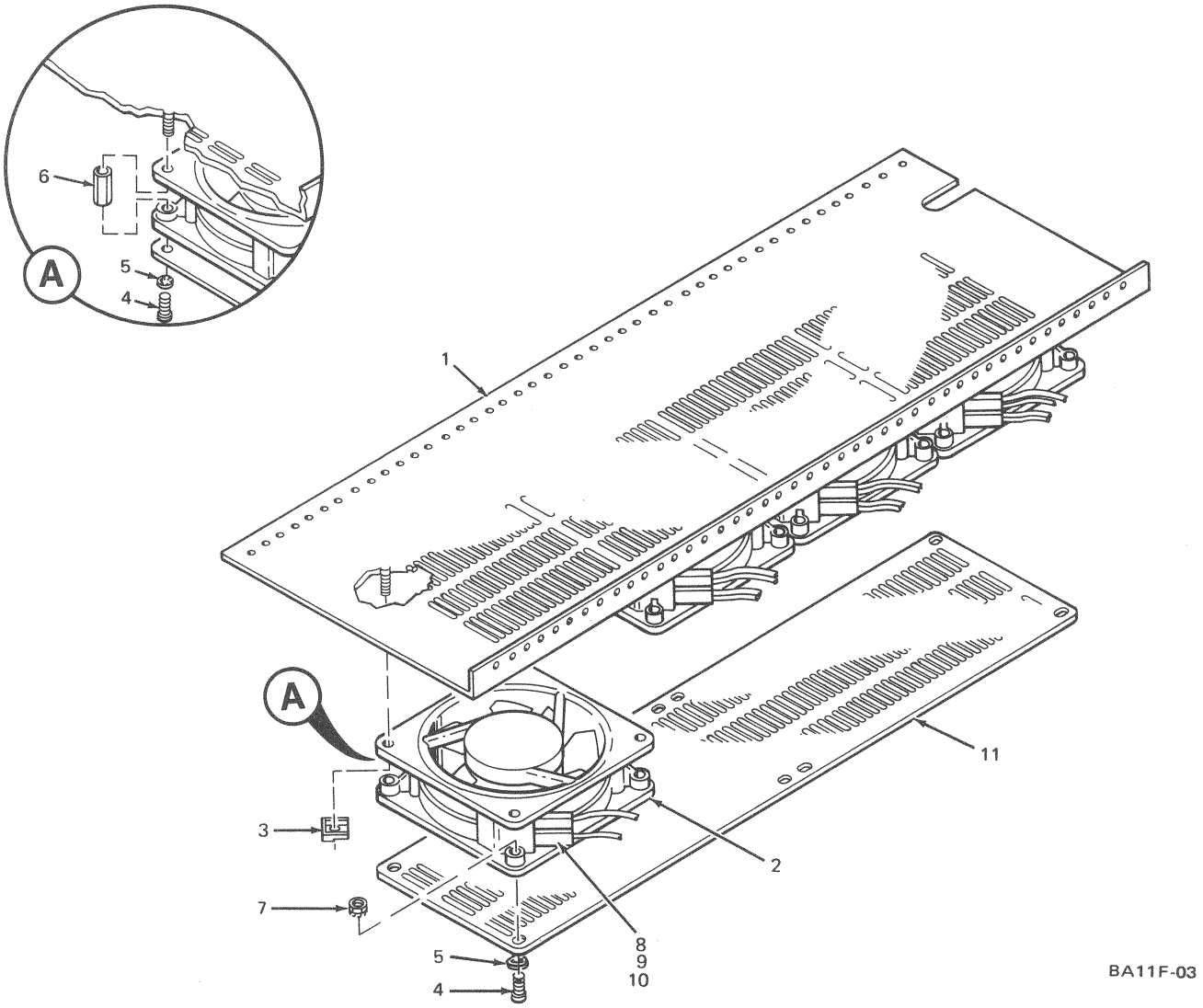

Figure 3. Fan Assembly (Bottom)

FIG & ITEM NO.	DESCRIPTION	DEC PART NO. B	ECO CUT-IN 70-10253 00002	USED ON CODE	VENDOR CODE	VENDOR PART NO.	REF FIG NO.
4–	FAN ASSEMBLY (TOP)	70-10253-00					1B
1	*Plate, Fan Mounting	74-12296-00					
2	*Fan (IMC or Rotron)	12-09403-01					
3	*Screw, Phl. Pan Hd. No. 6-32 x .62	90-06025-01					
4	*Nut, Kep No. 6-32	90-06560-00					
5	*Terminal, Fastab	12-10820-02					
6	*Housing, Fastab Socket	12-10820-01					
7	*Terminal, Fastab	12-10820-04					
8	*Wire, No. 18 AWG TWP Red/White	91-07430-29					
9	*Pin, Male	12-09378-01					

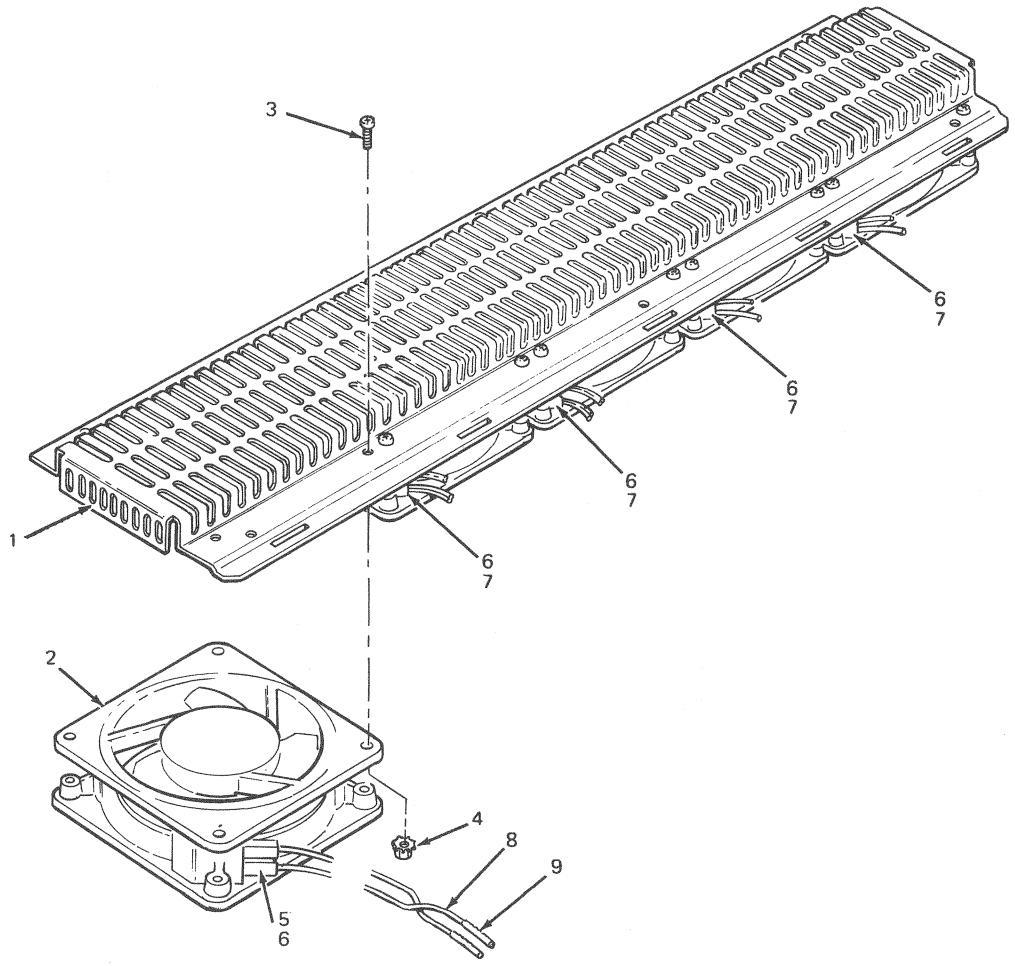

Figure 4. Fan Assembly (Top)

FIG & ITEM NO.	DESCRIPTION	C DEC PART NO.	ECO CUT-IN 70-10351 00002	USED ON CODE	VENDOR CODE	VENDOR PART NO.	REF FIG NO.
5–	FAN ASSEMBLY (BOTTOM)	70-10351-00					1B
1	*Bracket, Fan Mounting	74-12588-00					
2	*Fan, (IMC or Rotron)	12-09403-01					
3	*Screw, Phl. Pan Hd. No. 6-32 x .62	90-06025-01					
4	*Nut, Kep No. 6-32	90-06560-00					
5	*Terminal, Fastab	12-10820-02					
6	*Housing, Fastab Socket	12-10820-01					
7	*Terminal, Fastab	12-10820-04					
8	*Wire, No. 18 AWG TWP Red/White	91-07430-29					
9	*Pin, Male	12-09378-01					
							DEC

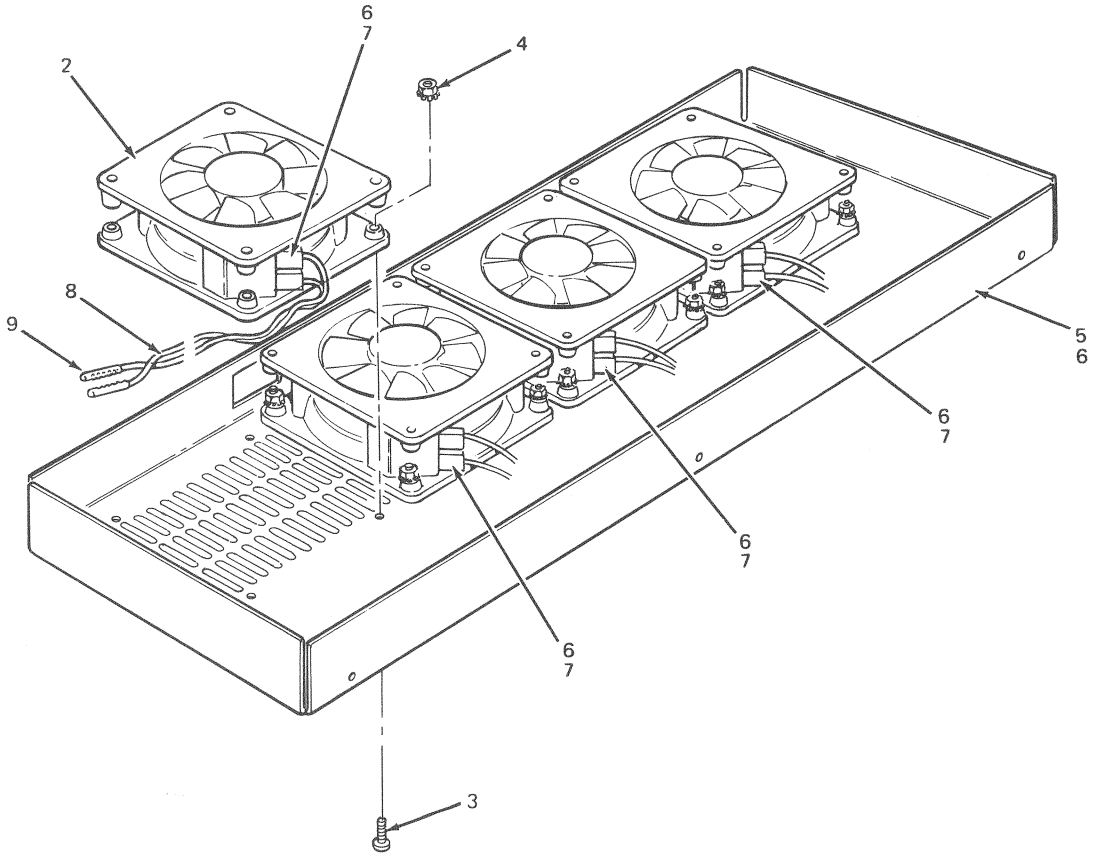

BA11F-07

Figure 5. Fan Assembly (Bottom)