"THE MATERIAL HEREIN IS FOR INFORMATION PURPOSES ONLY AND IS SUBJECT TO CHANGE WITHOUT NOTICE. DIGITAL EQUIPMENT CORPORATION ASSUMES NO RESPONSIBILITY FOR ANY ERRORS WHICH MAY APPEAR HEREIN." 1976

FIELD MAINTENANCE PRINT SET

"THIS DRAWING AND SPECIFICATIONS, HEREIN, ARE THE PROPERTY OF DIGITAL EQUIPMENT CORPORATION AND SHALL NOT BE REPRODUCED OR COPIED OR USED IN WHOLE OR IN PART AS THE BASIS FOR THE MANUFACTURE OR SALE OF ITEMS WITHOUT WRITTEN PERMISSION. COPYRIGHT © 1976 , DIGITAL EQUIPMENT CORPORATION."

TABLE OF CONTENTS

		UNIT VARIATIONS COVERED BY THIS PRINT SET
MPØØ176	FIELD MAINTENANCE PRINT SET (MP)	
B-TC-TRØ7-A -2Ø	FIELD MAINTENANCE PRINT SET (TC)	
D-UA-TRØ7-A -Ø	PEC FORMATTER INTERFACE	
C-IA-54Ø568Ø-Ø-Ø	LEFT END PANEL ASSY	
C-MD-53Ø2486-Ø-Ø	RIGHT END PANEL ASSY	
D-UA-BCØ8J-Ø-Ø	CABLE (BCØ8J)	
D-AD-7Ø13Ø9Ø-Ø-Ø	WIRED ASSY	
A-WT-7Ø13Ø9Ø-Ø	PEC FORMATTER INTERFACE AWT REVISION STATUS	TRØ7-A
D-AD-54Ø4491-Ø-Ø	H911 MTG PANEL	
A-DC-74Ø6371-Ø-Ø	LOGIC FRAME DECALS	
A-DC-7411881-Ø-Ø	DECAL LOGIC ASSY REV	
D-AD-53Ø2483-Ø-Ø	1943 CASTING PLUS PINS	
E-SC-12Ø5348-Ø-Ø	288 PIN BLOCK TYPE H8Ø3	
K-WL-TRØ7-A -19	WIRE LIST (PEC FORMATTER INTERFACE)	
B-MU-TRØ7-A -Ø1	MODULE UTILIZATION	
A-PL-TRØ7-A -Ø1	MODULE UTILIZATION (PL)	
C-BS-TRØ7-A -Ø2	FORMAT CONTROL	
C-BS-TRØ7-A -Ø3	INDICATOR DRIVERS	
C-BS-TRØ7-A -Ø4	8 CONTROL	
C-BS-TRØ7-A -Ø5	FROM 8	
C-BS-TRØ7-A -Ø6	TO 8	
C-BS-TRØ7-A -Ø7	COMMAND REG.	
C-BS-TRØ7-A -Ø8	MEMORY BUFFER	
C-BS-TRØ7-A -Ø9	FORMAT CONTROL	
C-BS-TRØ7-A -1Ø	WRITE BUFFER	
C-BS-TRØ7-A -11	WRITE CONTROL	
C-BS-TRØ7-A -12	READ CONTROL	
C-BS-TRØ7-A -13	READ BUFFER	
C-BS-TRØ7-A -14	COMPARE	
C-BS-TRØ7-A -15	FROM FORM	
C-BS-TRØ7-A -16	WRITE MUX	
C-BS-TRØ7-A -17	TO FORM	
D-IC-TRØ7-A -18	I/O CONNECTORS POSITIVE BUS	
B-CS-M216-Ø-1	SIX FLIP FLOPS	
B-CS-M921-Ø-1	DEVICE CODE SELECT JUMPER BOARD	
B-DD-TRØ7-A	PEC FORMATTER INTERFACE	

TRØ7-A

Field Maintenance Print Set

Digital Equipment Corporation

PRINT SET ORDER NO.
MPØØ176

REV.	CHG. NO.	DATE	REVISION

USED ON OPTION/MODEL	DRN.	DATE
PDP-8/E	[illegible]	7-15-76
	CHK'D	DATE
	[illegible]	7/15/76
	PROJ. ENG.	DATE
	[illegible]	12-3-76
	FIELD SERV.	DATE
		[illegible]

SHEET 1 OF 1

digital

TITLE: PEC FORMATTER INTERFACE

SIZE	CODE	NUMBER	REV.
B	TC	TRØ7-A -2Ø	

DIST.

DMS 134

THIS DRAWING AND SPECIFICATIONS, HEREIN, ARE THE PROPERTY OF DIGITAL EQUIPMENT CORPORATION AND SHALL NOT BE REPRODUCED OR COPIED OR USED IN WHOLE OR IN PART AS THE BASIS FOR THE MANUFACTURE OR SALE OF ITEMS WITHOUT WRITTEN PERMISSION.
COPYRIGHT © 1974, DIGITAL EQUIPMENT CORPORATION

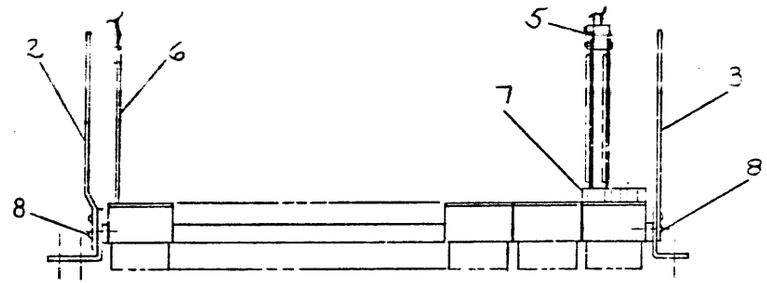

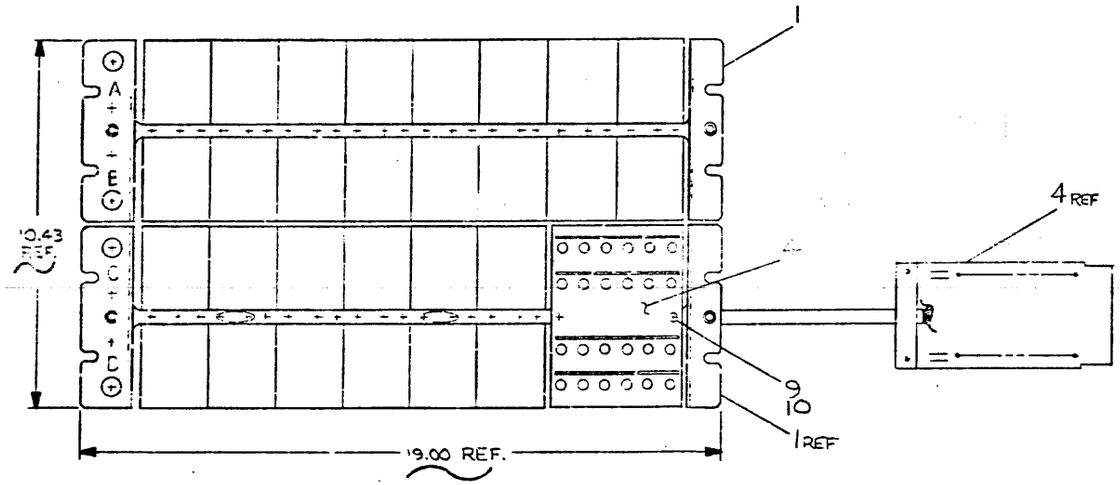

2	WASHER INT TOOTH #8	9006634	10
2	SCREW PHIL HD PAN #8-32x.62	9006040-1	9
16	POP RIVET #43AD43ABS USMC	9006503	8
1	UNIVERSAL I/O BLOCK	1209850	7
5	CABLE	[illegible]	6
1	FORMATTER CABLE	7012779	5
1	INDICATOR PANEL	7409117	4
2	RIGHT END PANEL ASSY	[illegible]	3
2	LEFT END PANEL ASSY	[illegible]	2
1	WIRED ASSY	[illegible]	1
	DESCRIPTION	DWG/PART NO.	ITEM NO.

UNLESS OTHERWISE SPECIFIED DIMENSIONS ARE IN INCHES

ANGLES ±0° 30'	CLASS OF ACCURACY (CHECK ONE)	NOMINAL DIMENSION RANGE INCHES					
SURFACE QUALITY TH ✓ MICROINCHES		OVER 0 TO 0.3	OVER 0.3 TO 1.2	OVER 1.2 TO 4.0	OVER 4.0 TO 7.0	OVER 7.0 TO 12.0	OVER 12.0 TO 40.0
	MEDIUM ☐	±.004	±.008	±.012	±.016	±.024	±.06
	PREFERRED ☐	±.012	±.016	±.025	±.04	±.063	±.11

QUANTITY & VARIATION

THIRD ANGLE PROJECTION

REMOVE BURRS AND BREAK SHARP CORNERS

DO NOT SCALE DWG

MATERIAL [illegible]

FINISH [illegible]

DRWN [illegible]
CHK'D [illegible]
ENG. [illegible]
PROJ. ENG. [illegible]
PROD [illegible]

NEXT HIGHER ASSY. [illegible]

SCALE [illegible]
SHEET [illegible] OF 1

FIRST USED ON T-C

digital

TITLE PEC FORMATTER INTERFACE

SIZE D | CODE LA | NUMBER TR17A-0 | REV.

DIST.

REVISIONS: REV. | CHANGE NO. | CHK

TR17A-0

"THIS DRAWING AND SPECIFICATIONS, HEREIN, ARE THE PROPERTY OF DIGITAL EQUIPMENT CORPORATION AND SHALL NOT BE REPRODUCED OR COPIED OR USED IN WHOLE OR IN PART AS THE BASIS FOR THE MANUFACTURE OR SALE OF ITEMS WITHOUT WRITTEN PERMISSION.
COPYRIGHT © 1981 DIGITAL EQUIPMENT CORPORATION"

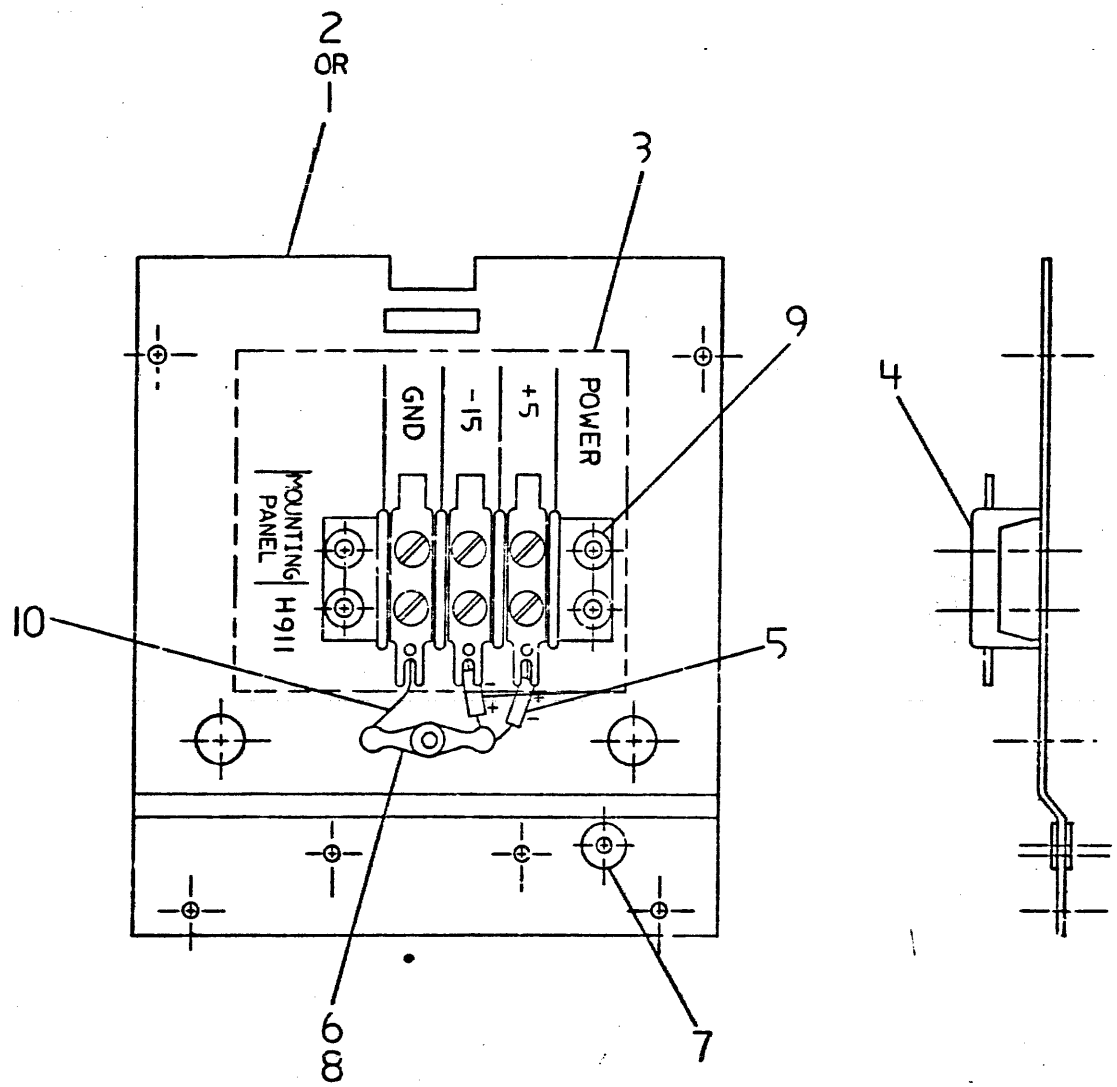

CAUTION: OFF SHEET PARTS LIST EXISTS. REFER TO K-PL-5405680-0-0.

DESCRIPTION	DRAWING NO.	PART NO.	ITEM NO

UNLESS OTHERWISE SPECIFIED DIMENSIONS ARE IN INCHES AND THE FOLLOWING TOLERANCES APPLY (PER DEC STD 114)

INCHES TOLERANCES	ANGLES ± 0° 30'	APPLICABLE DIMENSION RANGE (CHECK ONE)	DIMENSIONS RANGE IN INCHES					
			OVER -- TO 0.2	OVER 0.2 TO 1.2	OVER 1.2 TO 4.0	OVER 4.0 TO 12.0	OVER 12.0 TO 40.0	OVER 40.0 TO 80.0
X = ± .1	SURFACE QUALITY	☐	± .02		± .03	± .05	± .10	
XX = ± .02		☐	± .004	± .008	± .012	± .016	± .024	± .04
XXX = ± .005		☐						

QUANTITY & VARIATION

THIRD ANGLE PROJECTION

DO NOT SCALE DRAWING

REMOVE BURRS AND BREAK SHARP CORNERS

MATERIAL

FINISH

DRN S. Polak DATE 27-Jul-81
CHKD J. Fairbanks DATE 19-Aug-81
MFG ENG. DATE
RESP ENG DATE
MFG ENG. DATE

NEXT HIGHER ASSY D-AD-7008962-0-0

TITLE H911 digital LEFT END PANEL ASSY

DOCUMENT NUMBER: SIZE C CODE IA NUMBER 5405680-0-0 REV A

SCALE 1/1 SHEET 1 OF 1

REVISION HISTORY		
DATE	ECO NUMBER	REV.
6-81	7008962-MK01A	A
	S. Polak 27-Jul-81	
	K. HARRINGTON	

DRC 1003

MK1

SIZE C CODE IA NUMBER 5405680-0-0 REV A

AUTOMATED BY PRTLST.3P(44)

P A R T S L I S T

LINE	ITEM	DOCUMENT NUMBER	PART NUMBER	DESCRIPTION	QUANTITY PER VARIATION 00	01
1	1	C-MD-5302485-0-0	5302485-00	1943-2008 PANEL, LEFT END	1	0
2	2	C-MD-5302485-0-0	5302485-01	PANEL LEFT END	0	1
3	3	A-DC-5504487-0-0	5504487-00	LABEL, H911 MOUNTING PANEL	1	1
4	4		1202491-00	TERM BLOCK 3POS 9/16 SPACING	1	1
5	5		1005306-00	6.8MFD 35V 10% S.TANT	2	2
6	6		9006769-00	TERM,LUG #6STUD LOCKING 30	1	1
7	7		9007013-00	GROMMET, RUBBER	1	1
8	8		9006733-00	EYELET,FLAT FLANGE .1270DX .195	1	1
9	9		9006736-00	EYELET,FLAT FLANGE .1940DX .575	4	4
10	10		9107560-01	WIRE,BUSS,22AWG	A/R	A/R

REVISION HISTORY			BASIC PART NO: 5405680				
ENG	ECO NUMBER	REV	SECTION A OF A	DRN: S ZYLAK	DATE: 29-JUN-81	DBP DIGITAL	
RH	7008962-MK01A	A	SECTION. VARIATION INDEX [A] 00,01	CHK'D: J FALKOWSKI (J Falkowski 18 Aug 81)	DATE: 29-JUN-81	TITLE PARTS LIST H911 LEFT END PANEL ASSY	
			[B]	DES.ENG.: R HARRINGTON (Ray Harrington 25 Aug. 81)	DATE: 29-JUN-81		
			[C]	RESP.ENG.: R HARRINGTON (Ray Harrington 25 Aug. 81)	DATE: 29-JUN-81	DOCUMENT NUMBER	
			[D]			SIZE / CODE / NUMBER	REV
			[E]	MFG.ENG.: R O'CONNELL	DATE: 29-JUN-81	K / PL / 5405680-0-0	A
			[F]	ASSEMBLY NUMBER: C-IA-5405680-0-0	TOP DOCUMENT NUMBER: D-AD-7008962-0-0	FILE NAME: MK0466.PLS	EDIT # 4

*THIS DRAWING AND SPECIFICATIONS HEREIN, ARE THE PROPERTY OF DIGITAL EQUIPMENT CORPORATION AND SHALL NOT BE REPRODUCED OR COPIED OR USED IN WHOLE OR IN PART AS THE BASIS FOR THE MANUFACTURE OR SALE OF ITEMS WITHOUT WRITTEN PERMISSION.
COPYRIGHT (C) 1981, DIGITAL EQUIPMENT CORPORATION *

MK

This drawing and specifications, herein, are the property of Digital Equipment Corporation and shall not be reproduced or copied or used in whole or in part as the basis for the manufacture or sale of items without written permission.

LEGEND		
NUMBER	DIM A	DIM B
5302426-0	6 IN.	5-23/32
5302426-1	9-7/16 IN.	9-5/32

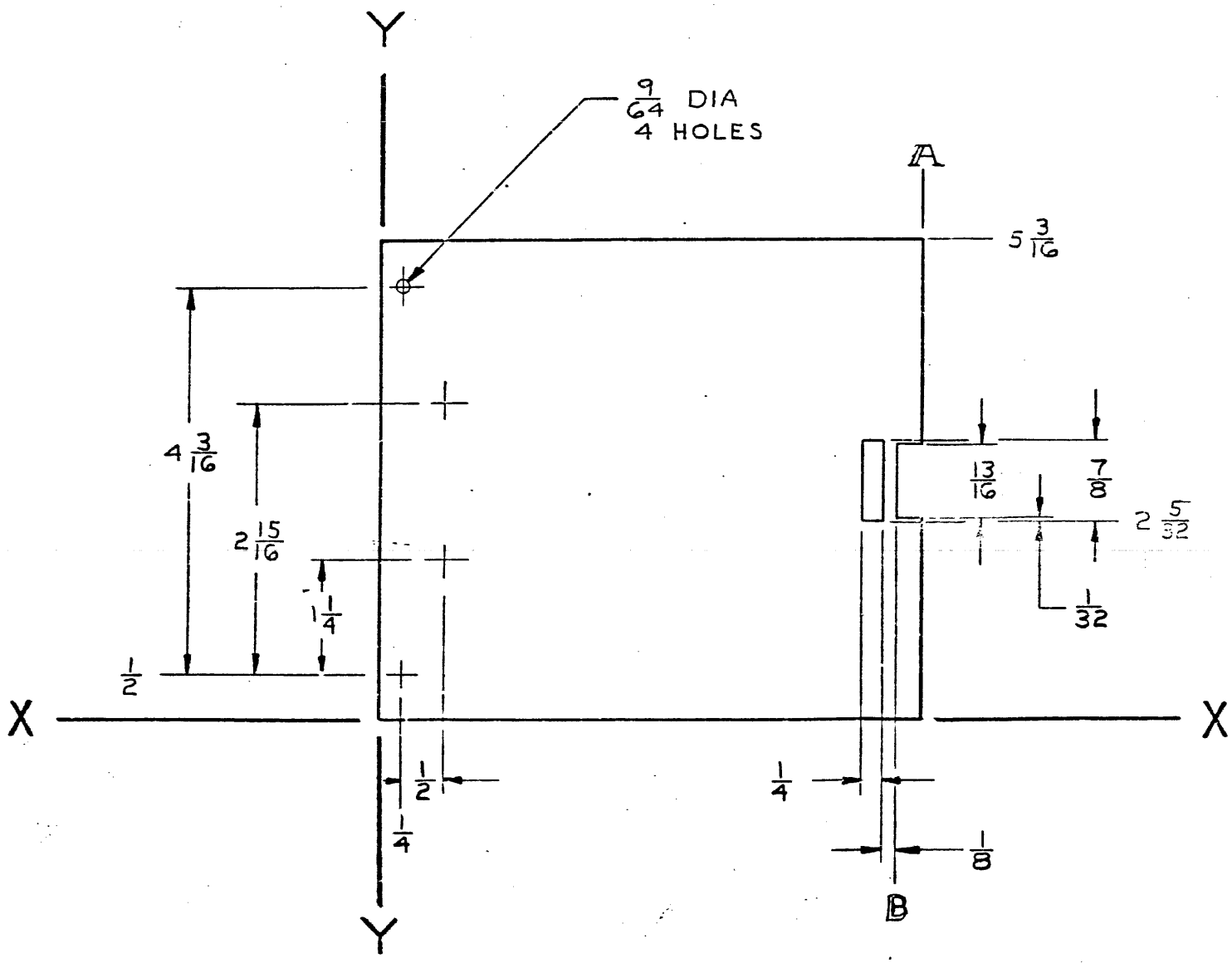

REVISIONS			
CHK.	CHANGE NO.		REV.
	ECO # 3371		B
	REDRAWN FOR CLARITY DWG # WAS MD-L-1943-0-1-0-1		
			C
	MISC-00088		
	W. GORDON		D
	2 NAME ROWSKI		

UNLESS OTHERWISE SPECIFIED

UNLESS OTHERWISE SPECIFIED
DIMENSION IN INCHES
TOLERANCES
DECIMALS ± .005 FRACTIONS ± 1/64 ANGLES ± 0°30'
FINAL SURFACE QUALITY ✓
REMOVE BURRS AND BREAK SHARP CORNERS

MATERIAL .090 THK #5052-H32 AL MILL FINISH

FINISH SPEC #92-00200-00

QTY.	DESCRIPTION	PART NO.	ITEM NO.
	PARTS LIST		

DRN.	DATE 6/12/67	EQUIPMENT CORPORATION MAYNARD MASSACHUSETTS
CHK'D.	DATE	
ENG.	DATE	TITLE PANEL, RIGHT END
PROJ. ENG.	DATE	
PROD.	DATE	
FIRST USED ON D-UA-1943-0-0		SIZE C CODE MD NUMBER 5302486-0-0 REV. D
SCALE 1/1		
SHEET 1 OF 1		DIST.

SIZE C CODE MD NUMBER 5302486-0-0 REV. D

DEC FORM NO. OPC 100

WIRE TABLE

ITEM NO	DESCRIPTION AWG	COLOR	FROM CONNECTION	TO CONNECTION	REMARKS
1	30	GREY	P1 - D	P2 - B1	
↑	↑	↑	P1 - J	P2 - B1	
			P1 - F	P2 - D2	
			P1 - N	P2 - E1	
			P1 - L	P2 - E2	
			P1 - T	P2 - H1	
			P1 - R	P2 - H2	
			P1 - X	P2 - J1	
			P1 - V	P2 - K2	
			P1 - BB	P2 - L1	
			P1 - FF	P2 - M1	
			P1 - Z	P2 - M2	
			P1 - LL	P2 - P1	
			P1 - DD	P2 - P2	
			P1 - RR	P2 - S1	
			P1 - JJ	P2 - S2	
↓	↓	↓	P1 - NN	P2 - T2	
7	30	GREY	J1 - VV	P2 - V2	

SEE NOTE #2

SEE NOTE #3

LEGEND

NUMBER	ITEM NO 1	DIM 'X'
BC08J-0-06	7007036-06	6FT ± 2IN
BC08J-0-10	7007036-10	10FT ± 2IN
BC08J-0-15	7007036-15	15FT ± 3IN
BC08J-0-25	7007036-25	25FT ± 3IN
BC08J-0-50	7007036-50	50FT ± 1FT

NOTES:

1. CONNECTORS P1 AND J1 ARE TO BE WIRED POINT TO POINT P1-A TO J1-A THRU P1-VV TO J1-VV.
2. ASTERISKS INDICATE CAVITIES NOT USED OR DESIGNATED BY LETTERS.
3. ALL P1 & P2 CONNECTIONS NOT LISTED ON THE WIRE TABLE ARE GROUNDED

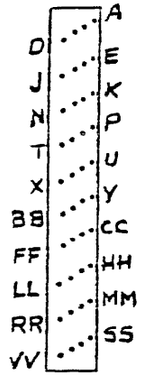

VIEW B-B

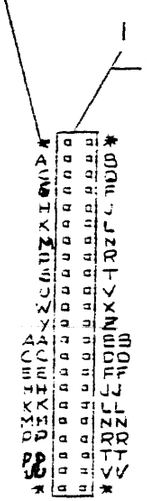

VIEW A-A
(REF.)

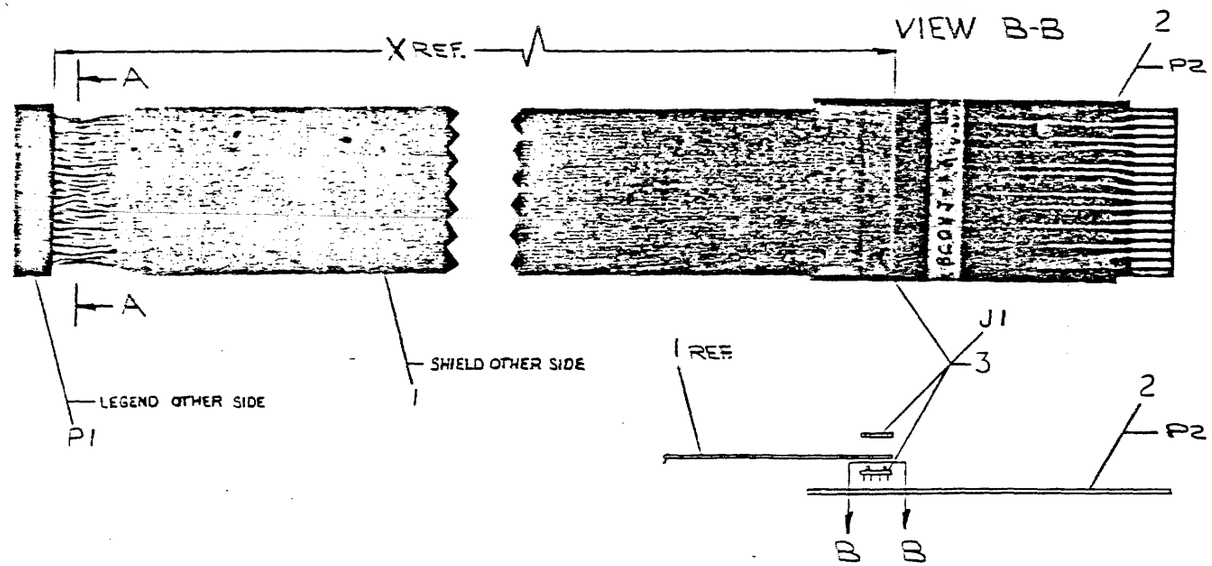

QTY.	DESCRIPTION	PART NO.	ITEM NO.
1	ETCH BOARD CONNECTOR	1210073-0	3
1	M953 I/O CABLE BD	M953-0-5	2
1	I/O CABLE	SEE LEGEND	1

PARTS LIST

FIRST USED ON OPTION/MODEL: BC08J

TOLERANCES DECIMALS
XXX = ± .005
XX = ± .02
X = ± .1

DO NOT SCALE DRAWING
UNLESS OTHERWISE SPECIFIED
DIMENSION IN INCHES
TOLERANCES
DECIMALS FRACTIONS ANGLES
FINAL SURFACE QUALITY
REMOVE BURRS AND BREAK SHARP CORNERS

MATERIAL

FINISH

DRN. DATE 8-25-70
CHK. DATE 8-2-70
ENG. DATE 8-3-70
APPROV. ENG. DATE 8-3-70
PROD. DATE 8/4/70
NEXT HIGHER ASSY

SCALE NONE
SHEET 1 OF 1

digital EQUIPMENT CORPORATION
MAYNARD, MASSACHUSETTS

TITLE
I/O CABLE
(BC08J)

SIZE D SCALE U NUMBER A BC08J-0-0 REV. 5
DIST. G

REV	CHANGE NO	CHK
A	BC08J-0-0005	
B		

REVISIONS

CARDINEAU

CARDINEAU

DIGITAL FORM NO. 08

THIS DRAWING AND SPECIFICATIONS, HEREIN, ARE THE PROPERTY OF DIGITAL EQUIPMENT CORPORATION AND SHALL NOT BE REPRODUCED OR COPIED OR USED IN WHOLE OR IN PART AS THE BASIS FOR THE MANUFACTURE OR SALE OF ITEMS WITHOUT WRITTEN PERMISSION. COPYRIGHT © 1976 DIGITAL EQUIPMENT CORPORATION

NOTES:

1. CONNECTIONS ON ITEMS 2 & 3 TO BE LOCATED & SOLDERED AT MINIMUM PRACTICAL HEIGHT ABOVE BLOCKS.
2. USE YELLOW WIRE (ITEM #5) FOR MACHINE WRAPPED AND BLUE WIRE (ITEM #6) FOR HAND WRAPPED WIRING IF NEEDED.

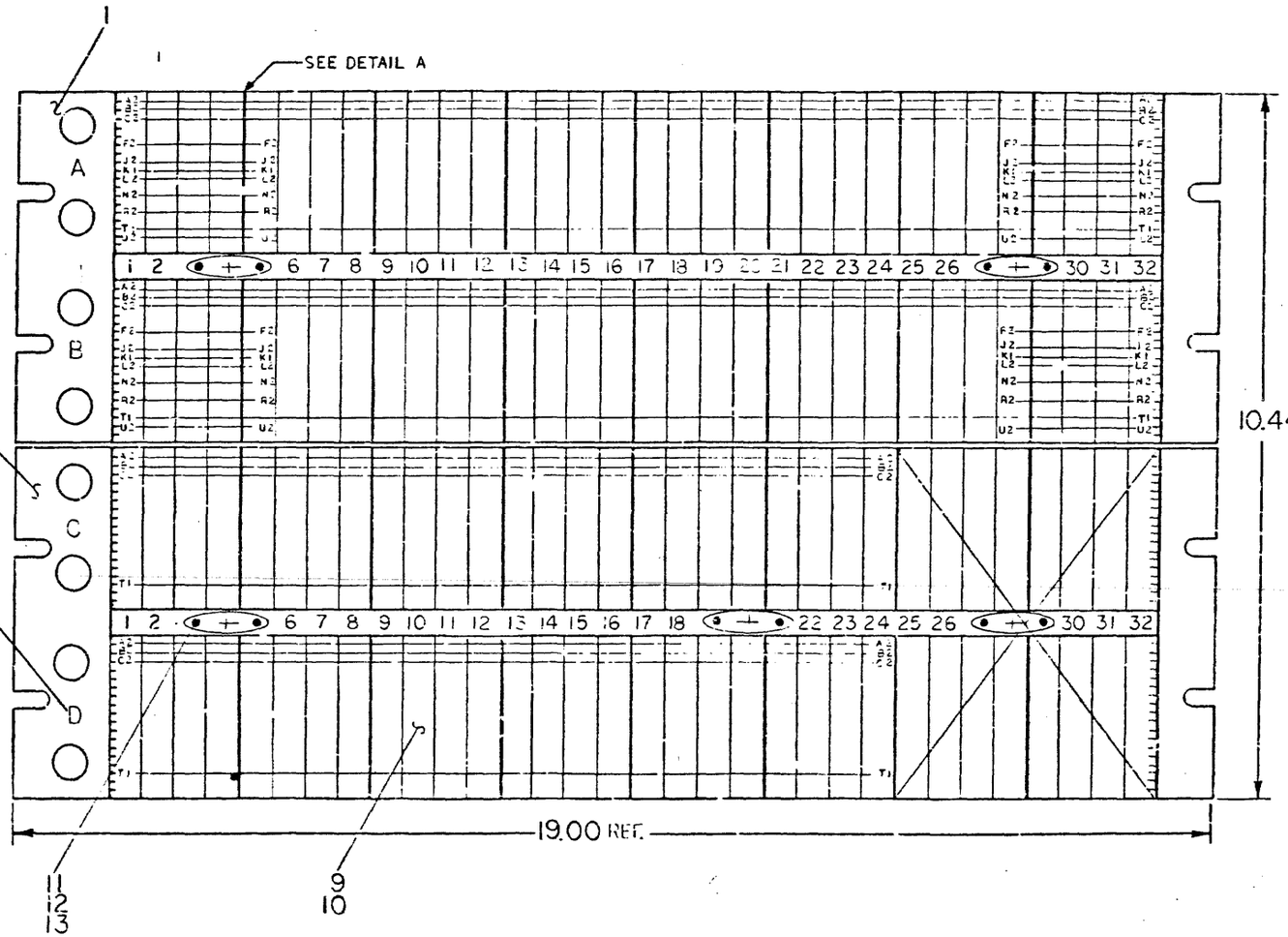

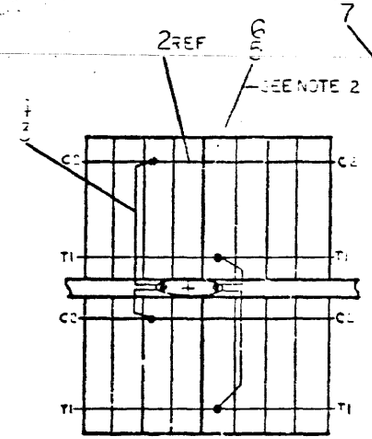

DETAIL A
4 PLACES

r	WIRE LIST (PEC FORMATTER INTERFACE)	A-WL-TR27-A-13 REF	
1	PEC FORMATTER INTERFACE AWT REVISION STATUS	A-WT-701309 J-0 REF	
1	DECAL LOGIC ASSY REV	A-DC-741199-0	14
3	TERM #2116-09-00 SHAKEPROOF	90007597	13
2	WASH EXT TOOTH LOCK #8	90008072	12
2	SCR PHL HD PAN #8-32X1/4 LG	90060351	11
8	SCR FIL HD POZIDRIVE #8-32X5/8 LG	90061203	10
6	1943 PIN BLOCK TYPE H-943	8-5010205343-0-0	9
1	1943 CASTING PLUS PINS	8-40-5302-43-0-0	8
1	LOGIC FRAME DECALS	A-DC-741637-0-0	7
	30 AWG SOLID KYNAR WIRE (OW)	9105740-66	6
9 FT	30 AWG SOLID KYNAR WIRE (YELL)	9105740-44	5
1 FT	22 FULLING TEFLON WHT	9107245-09	4
1 FT	22 AWG WIRE	9107560-01	3
9 FT	BUS STRIP	90073859	2
1	1943 MTG PANEL	10-A-6542-44-1-0	1
		PART NO.	

FIRST USED ON ASSY: PDP-9/E

PARTS LIST

digital EQUIPMENT CORPORATION

TITLE: WIRED ASS'Y

NEXT HIGHER ASSY: D-UA-TR27-A-12

CODE: D | NUMBER: AD 701309 J-0-0 | REV.

SCALE: | SHEET 1 OF 1

REV	ECO HISTORY		CHK
WIRE LIST	ECO NUMBER		
WIRED ASSY			

This drawing and specifications, herein, are the property of Digital Equipment Corporation and shall not be reproduced or copied or used in whole or in part as the basis for the manufacture or sale of items without written permission.

AUTOMATIC WIRE TESTER (AWT) REVISION STATUS

DRAWING NUMBER	INIT REL
	*
D-AD-7013090-0-0	*
K-WL-TRØ7-A -19	*

REV.

NUMBER 7013090-0

SIZE A CODE WT

REVISIONS

REV.	CHANGE NO.	CHK

DSN.	DATE	
CHK'D.	DATE	
ENG.	DATE	
PROJ. ENG	DATE	
PROD.	DATE	
FIRST USED ON	PDP-8/E	
SCALE	NONE	
SHEET 1 OF 1		

DIGITAL EQUIPMENT CORPORATION
MAYNARD MASSACHUSETTS

TITLE

PEC FORMATTER INTERFACE

AWT REVISION STATUS

SIZE	CODE	NUMBER	REV.
A	WT	7013090-0	

DIST.

DRA 123

DEC 16-(325)-1097-N174

LEGEND	
NUMBER	VARIATION
5404491-0	M803 CONN BLOCKS (NO SLOTS)
5404491-1	H863 CONN BLOCKS (SLOTTED)

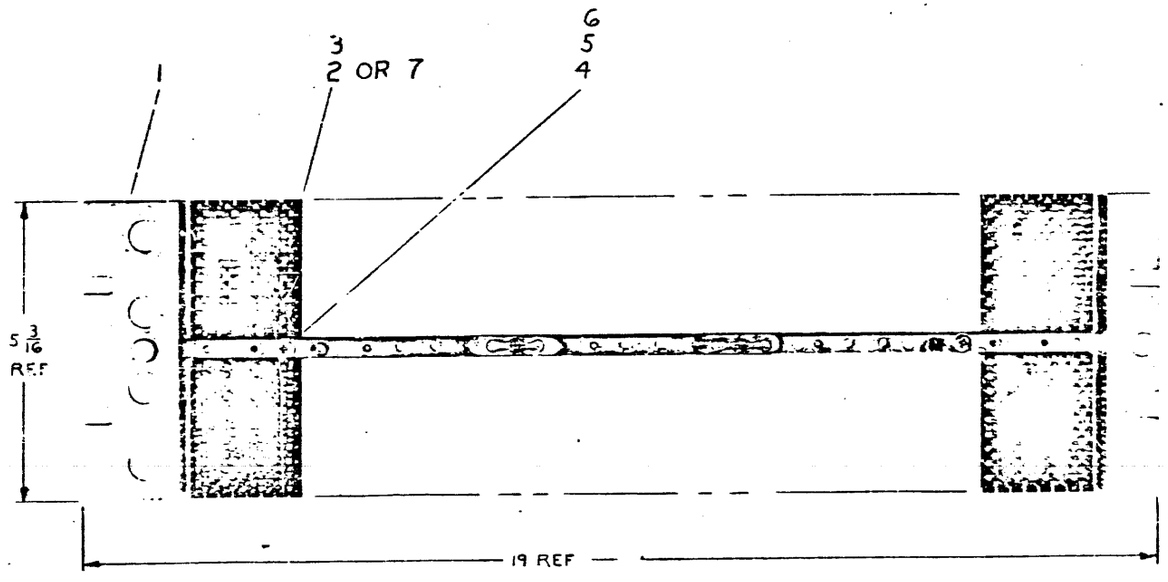

QTY.	DESCRIPTION	PART NO.	ITEM NO.
	PARTS LIST		

UNLESS OTHERWISE SPECIFIED
DIMENSION IN INCHES
TOLERANCES
DECIMALS ± FRACTIONS ± ANGLES ±
FINAL SURFACE QUALITY
REMOVE BURRS AND BREAK SHARP CORNERS

MATERIAL
FINISH

DRN. DATE
CHK'D DATE
ENGR DATE
MGR DATE
PROJ DATE

FIRST USED ON
D-UA-H911-0-0

SCALE
SHEET 1 OF 1

DIGITAL EQUIPMENT CORPORATION
MAYNARD, MASSACHUSETTS

TITLE
MTG PANEL
TYPE H911

SIZE D CODE NUMBER 5404491-0-1 REV. F

REVISIONS			
CHK	CHANGE NO.		REV.
			A
			B
			C
			D
			E
			F

SIZE FORM NO.

D-UA-H911-0-0 REV F
D AD 5404491-0-0 REV F

This drawing and specifications, herein, are the property of Digital Equipment Corporation and shall not be reproduced or copied or used in whole or in part as the basis for the manufacture or sale of items without written permission.

LEGEND	
NUMBER	VARIATION
7406371-0	BLK LETTERS ON CLEAR
7406371-1	WHT LETTERS ON CLEAR

A B C D E F H J
K L M N P R S T
U V W X Y Z

BLK. LETTERS CLEAR BACKGROUND

REVISIONS		
CHK	CHANGE NO.	REV.
SB	7406371-00001	A

DRN. D. Wattson	DATE 10/13/67	DIGITAL EQUIPMENT CORPORATION MAYNARD, MASSACHUSETTS
CHK'D.	DATE 10/20/67	
ENG. Jordan	DATE	TITLE LOGIC FRAME DECALS (CLEAR)
PROJ. ENG.	DATE	
PROD.	DATE	
FIRST USED ON		SIZE A · CODE DC · NUMBER 7406371-0-0 · REV. A
SCALE 1/1		
SHEET 1 OF 1		DIST.

This drawing and specifications, herein, are the property of Digital Equipment Corporation and shall not be reproduced or copied or used in whole or in part as the basis for the manufacture or sale of items without written permission.

COPYRIGHT © 1974
DIGITAL EQUIP CORP

NOTE:

1.) MAT'L: WHITE FASSON "PLI-A PRINT" 60# ACRYLIC LATEX IMPREGNATED PAPER STOCK WITH PERMANENT ADHESIVE ON BACKSIDE WITH EASY PEEL OFF COVER.
2.) BLACK LINES & LETTERS AS SHOWN.
3.) DECALS TO BE SUPPLIED CUT TO SIZE AS SHOWN.
4.) INFORMATION TO BE RECORDED ON DECALS USING ONLY DEC P/N 1213959-0-0 (PANDUIT PEN # PX-0) OR BALL POINT PEN.
5.) SURFACE OF APPLICATION MUST BE FREE OF ANY DIRT OR OILS BEFORE ATTEMPTING TO PUT DOWN DECAL.

OPTION	WL	BUS	JUMP	ETCH	AWT	AWT
REV.						
PART NO.		DATE			QC	

FIRST USED ON OPT/MOD
RPØ4

REVISIONS			
CHK	CHANGE NO.	REV.	
	7411881-00001	A	J. Douglas 9-8-75
	7411881-00003	B	J. Douglas 17 FEB 77

BLACK on white

DRN. J. Douglas	DATE 4-1-74	DIGITAL EQUIPMENT CORPORATION MAYNARD, MASSACHUSETTS
CHK'D	DATE 4-2-74	TITLE
ENG.	DATE 4/3/74	DECAL
PROJ. ENG.	DATE 4/8/74	LOGIC ASSY REVISION
PROD.	DATE 4/3/74	
NEXT HIGHER ASSY E-AD-9009660-0-0		
SCALE 1/1		SIZE A · CODE DC · NUMBER 7411881-0-0 · REV. B
SHEET 1 OF 1		DIST.

This drawing specifications herein are the property of Digital Equipment Corporation and shall not be reproduced or copied or used in whole or in part as the basis for the manufacture or sale of items without written permission.

NOTES

1. INSTALL PERMA NUT, ITEM #1 IN 2 "A" HOLES AFTER FINISH.

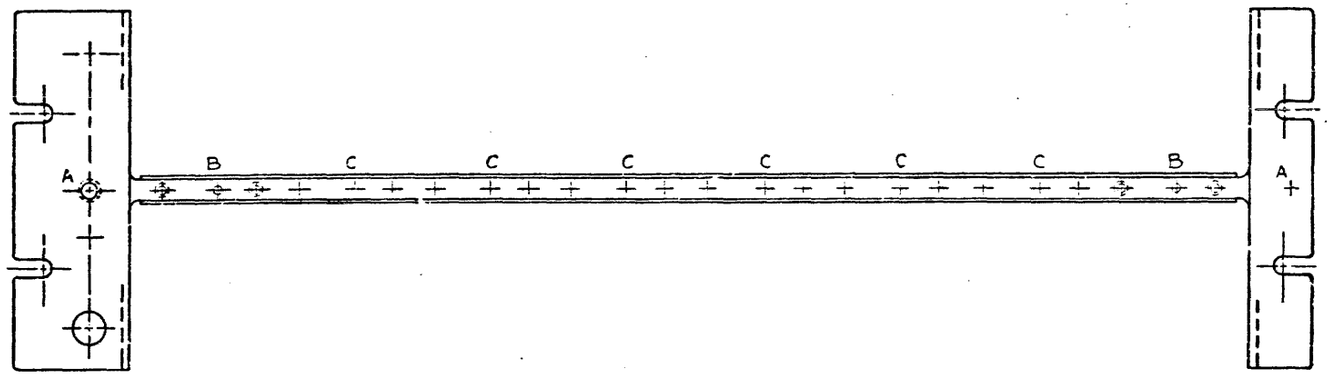

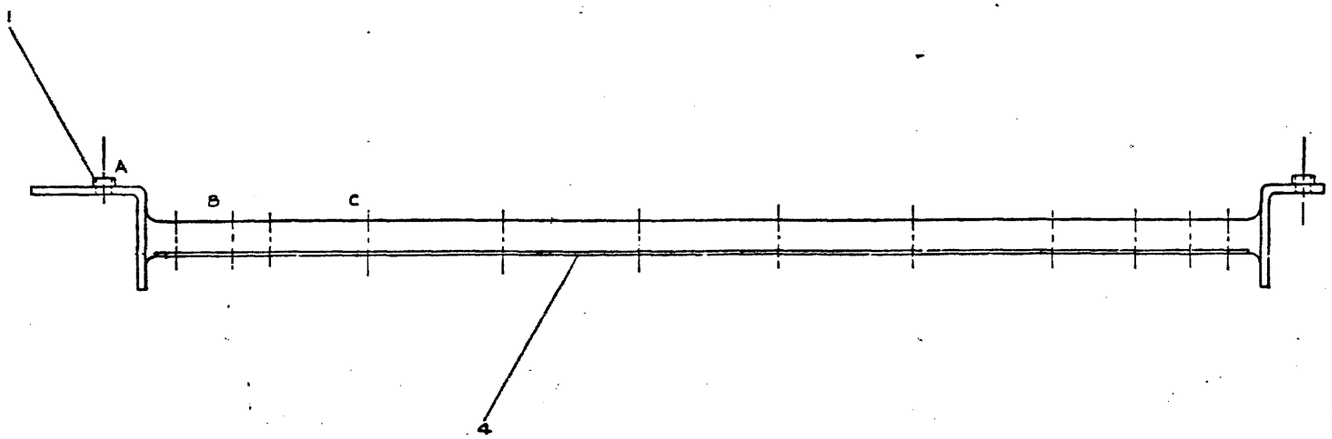

QTY.	DESCRIPTION	PART NO.	ITEM NO.

PARTS LIST

UNLESS OTHERWISE SPECIFIED
DIMENSION IN INCHES
TOLERANCES
DECIMALS ± .000 FRACTIONS ± 1/64 ANGLES ± 0°30'
FINAL SURFACE QUALITY ✓
REMOVE BURRS AND BREAK SHARP CORNERS

MATERIAL

FINISH

DRN DATE
CHK'D DATE
ENG DATE
PROJ ENG DATE
MGR DATE

FIRST USED ON

SCALE 1/1
SHEET OF

DIGITAL EQUIPMENT CORPORATION
MAYNARD, MASSACHUSETTS

TITLE
CASTING ASSY
(1943)

SIZE	CODE	NUMBER	REV
D	AD	53024 23-0-0	B

REVISIONS

CHG. NO.	REV.
[illegible]	A
[illegible]	B

DIGITAL CODE D AD NUMBER 53024 23-0-0 REV B

THESE DRAWINGS AND SPECIFICATIONS, HEREIN, ARE THE PROPERTY OF DIGITAL EQUIPMENT CORPORATION AND SHALL NOT BE REPRODUCED OR COPIED OR USED IN WHOLE OR IN PART AS THE BASIS FOR THE MANUFACTURE OR SALE OF ITEMS WITHOUT WRITTEN PERMISSION. COPYRIGHT © 1974 DIGITAL EQUIPMENT CORPORATION

* ASTERISK: INDICATES TOLERANCES ARE NON-ACCUMULATIVE.

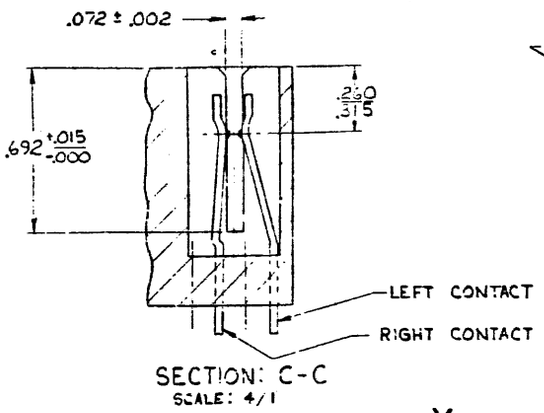

SECTION: C-C
SCALE: 4/1

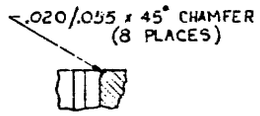

SECTION: D-D
SCALE: 4/1

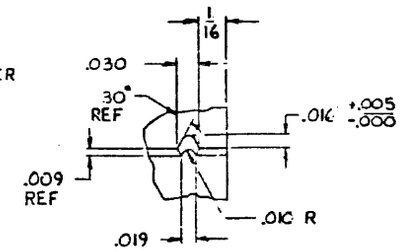

DETAIL 'A'
(2 PLACES)
SCALE: NONE

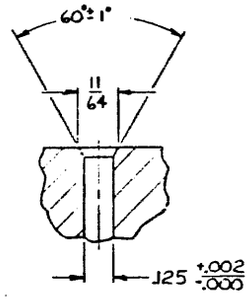

SECTION: B-B
SCALE: 4/1

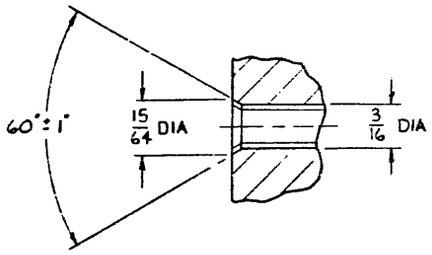

SECTION: A-A
SCALE: 4/1

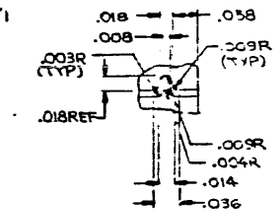

DETAIL A
(OPTIONAL)
SCALE: NONE

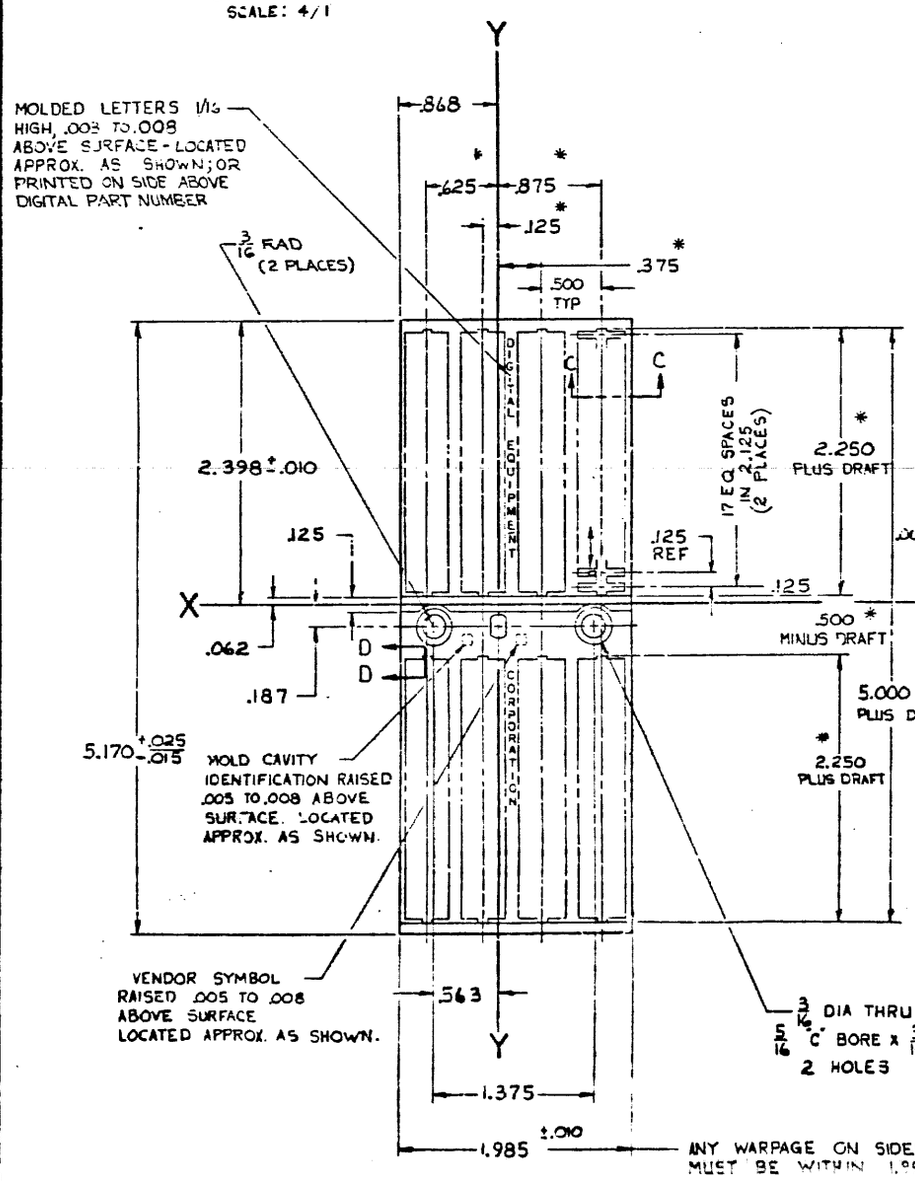

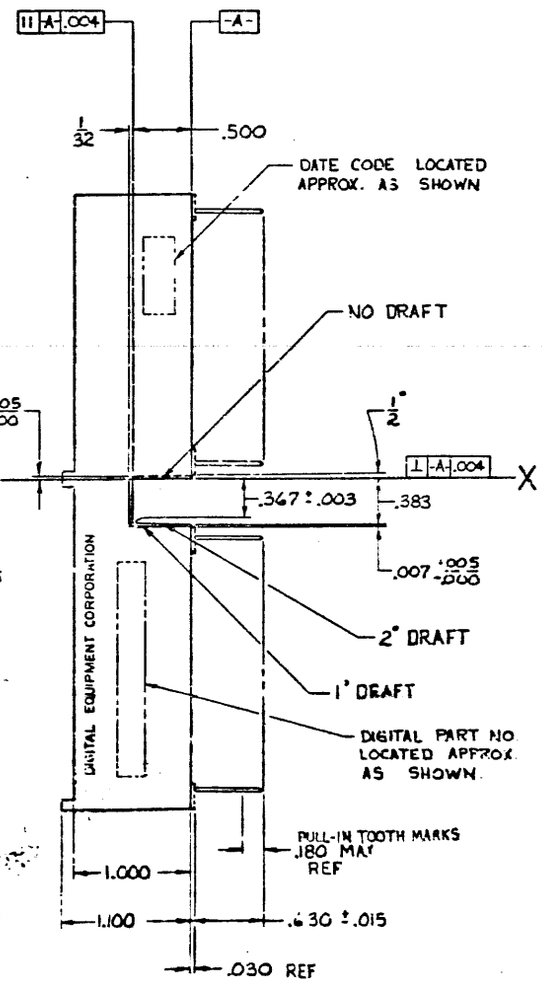

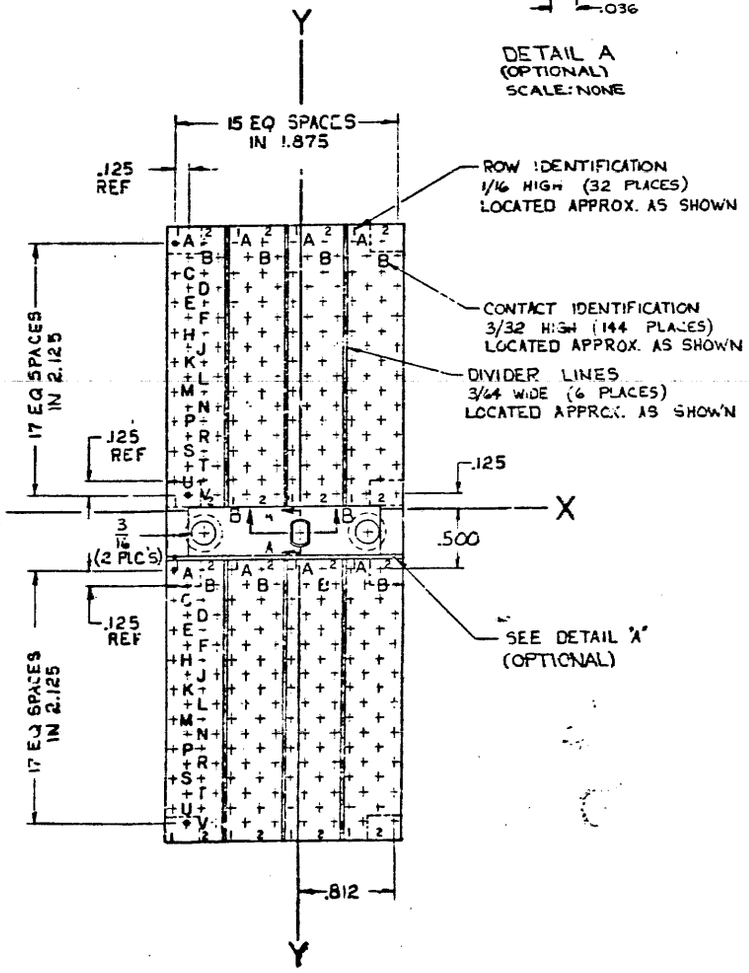

FIGURE 1
CONFIGURATION & DIMENSIONS
(1205348-00)

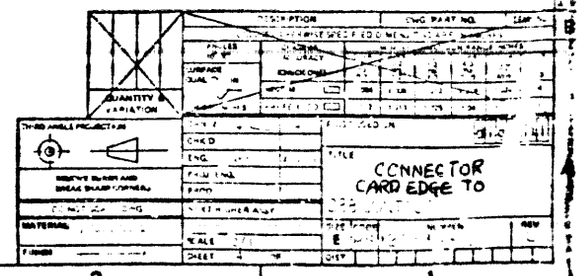

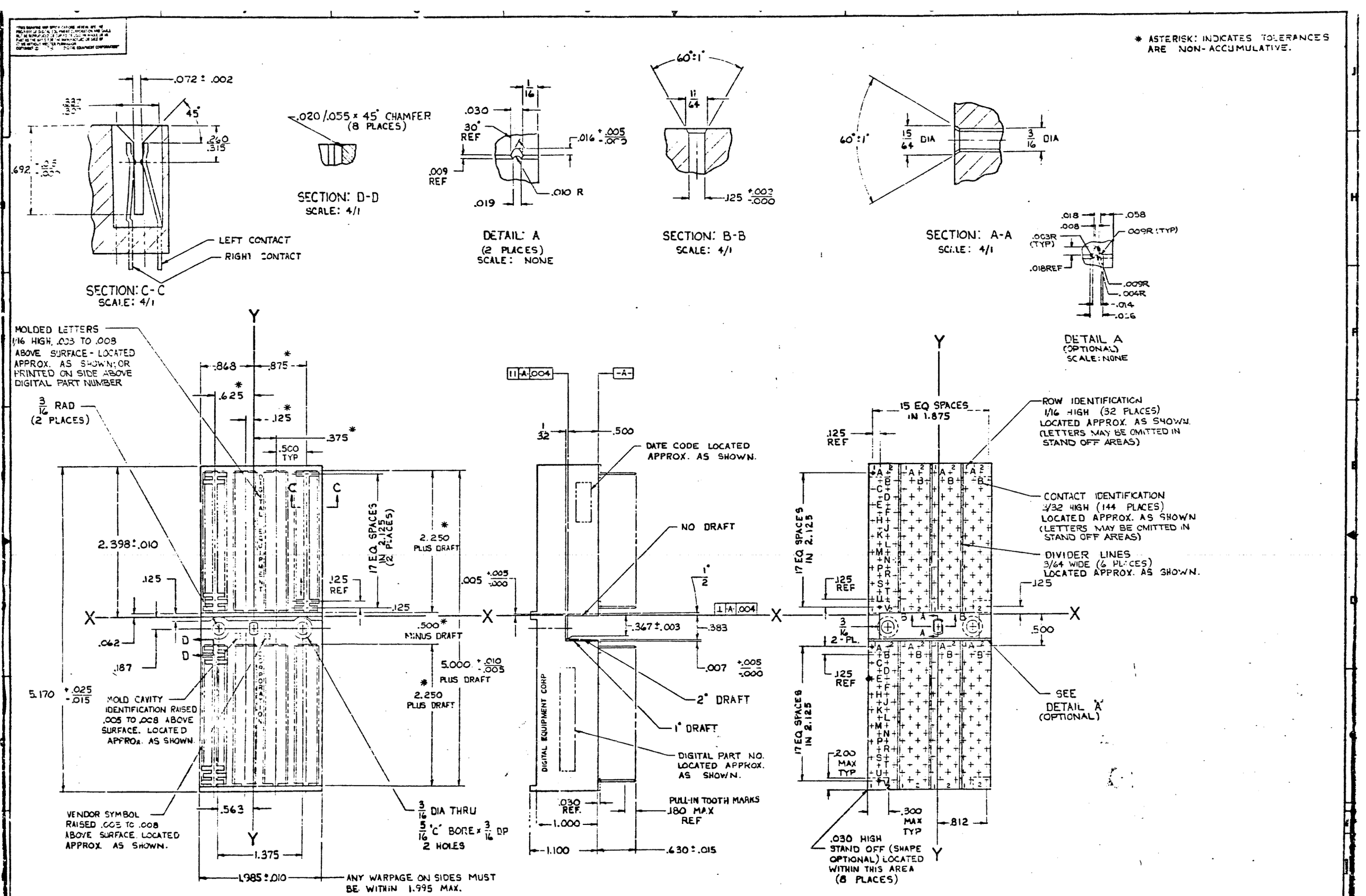

FIGURE 2
CONFIGURATION & DIMENSIONS
(1205348-13)

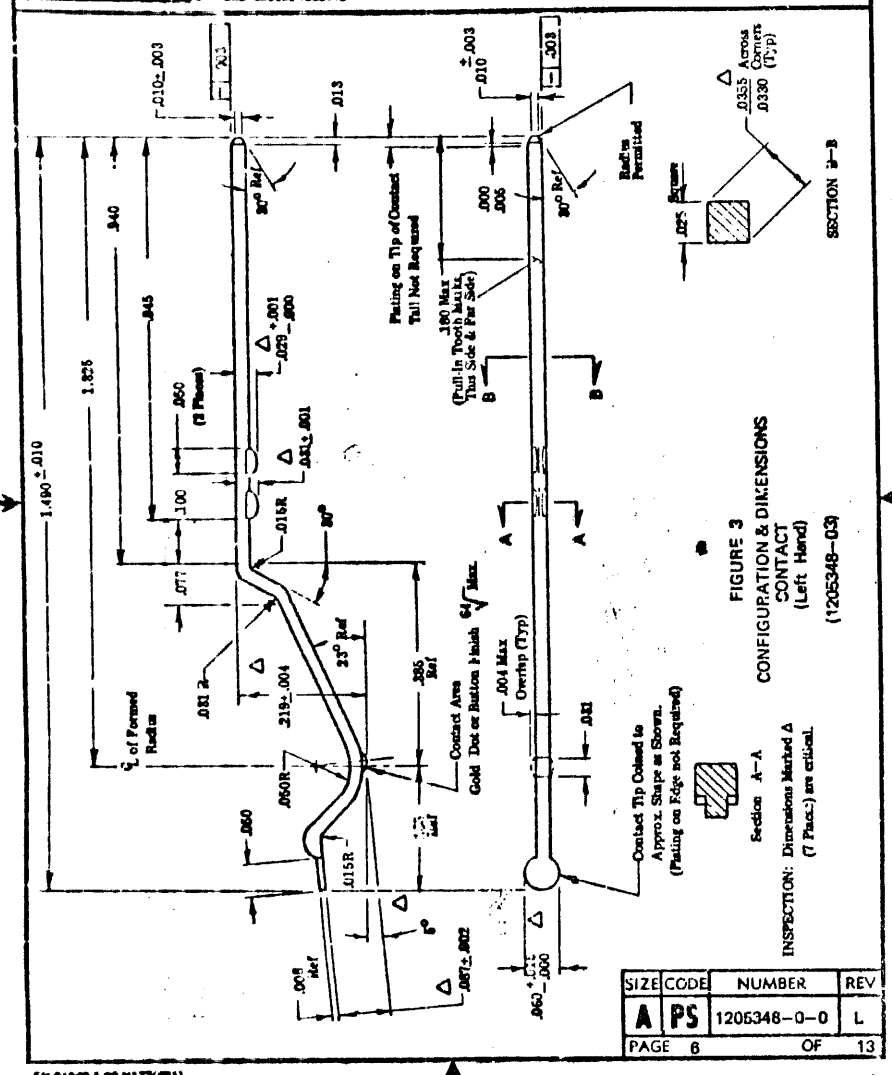

FIGURE 3
CONFIGURATION & DIMENSIONS
CONTACT
(Left Hand)
(1205348–03)

SIZE	CODE	NUMBER	REV
A	PS	1205348–0–0	L

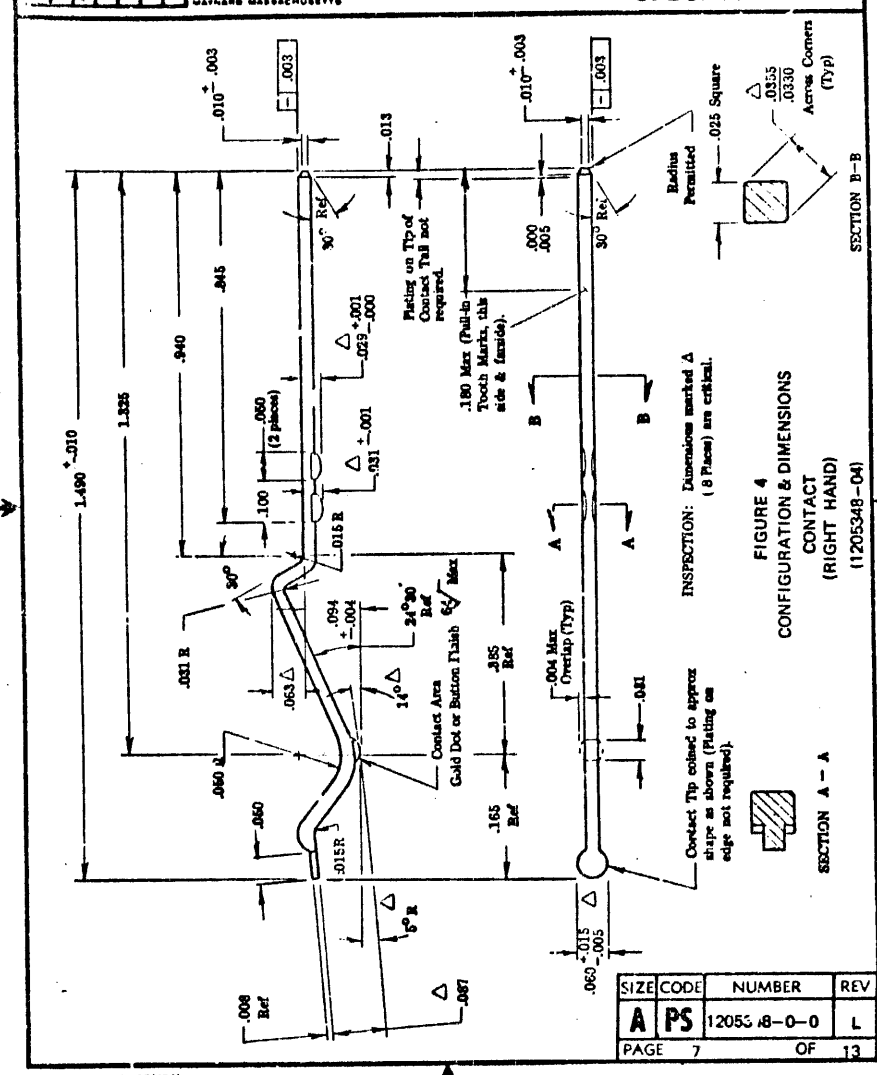

FIGURE 4
CONFIGURATION & DIMENSIONS
CONTACT
(RIGHT HAND)
(1205348–04)

SIZE	CODE	NUMBER	REV
A	PS	1205348–0–0	L

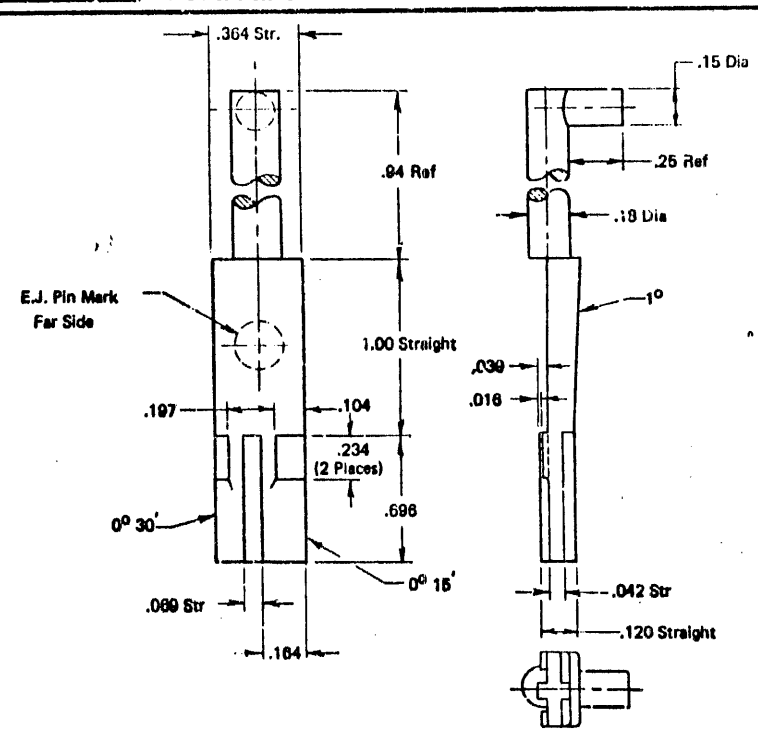

FIGURE 5
REPAIR BLADE, LEFT
(1205348–07)

SIZE	CODE	NUMBER	REV
A	PS	1205348–0–0	L

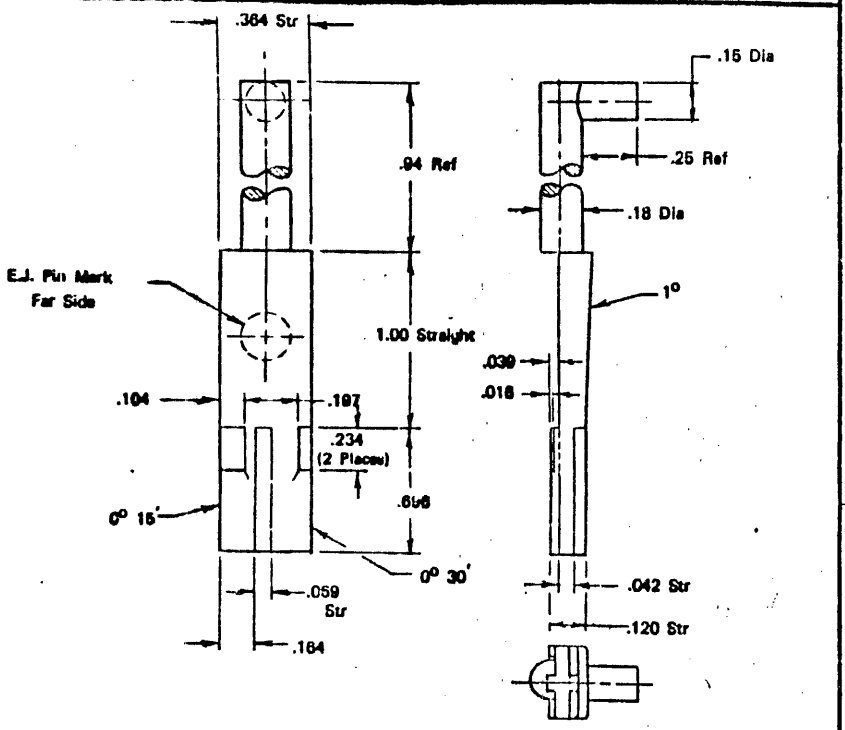

FIGURE 6

REPAIR BLADE, RIGHT

(1206348–08)

SIZE	CODE	NUMBER	REV
A	PS	1206348–0–0	L

PAGE 9 OF 13

EN-01040-1-00-N173(401)

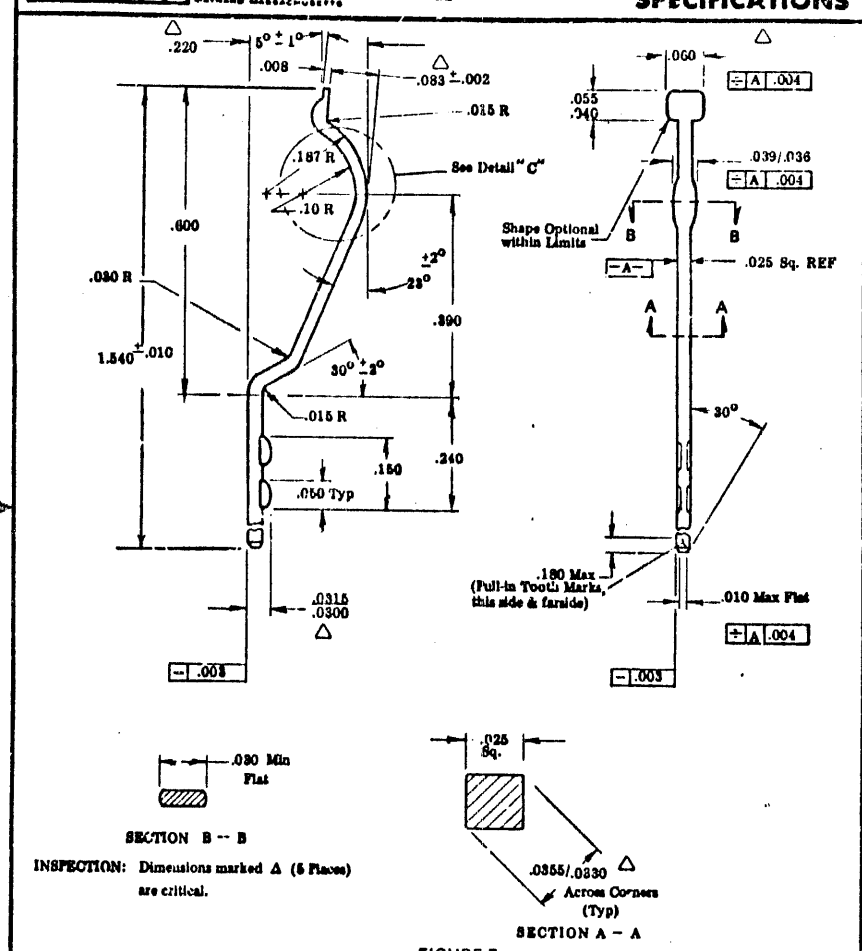

SECTION B – B

INSPECTION: Dimensions marked Δ (5 Places) are critical.

SECTION A – A

FIGURE 7
CONFIGURATION & DIMENSIONS
CONTACT LEFT HAND
(1206348–09)

SIZE	CODE	NUMBER	REV
A	PS	1206348–0–0	L

PAGE 10 OF 13

EN-01040-1-00-N173(401)

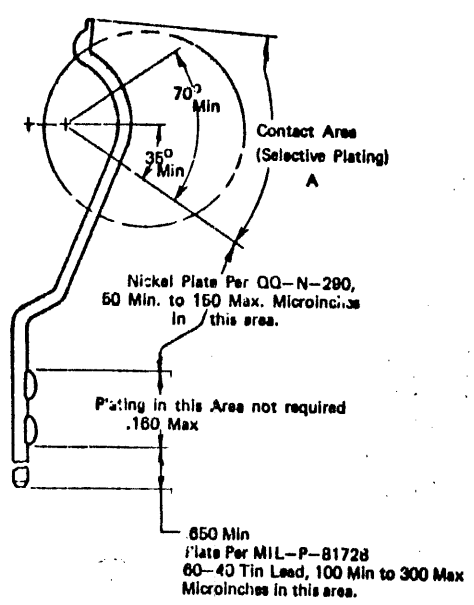

DETAIL "C"

(FINISH REQUIREMENTS)

FIGURE 7 (Continued)

CONFIGURATION & DIMENSIONS

CONTACT

(LEFT HAND)

(1206348-09)

SIZE	CODE	NUMBER	REV
A	PS	1206348–0–0	L

PAGE 11 OF 13

EN-01040-1-00-N173(401)

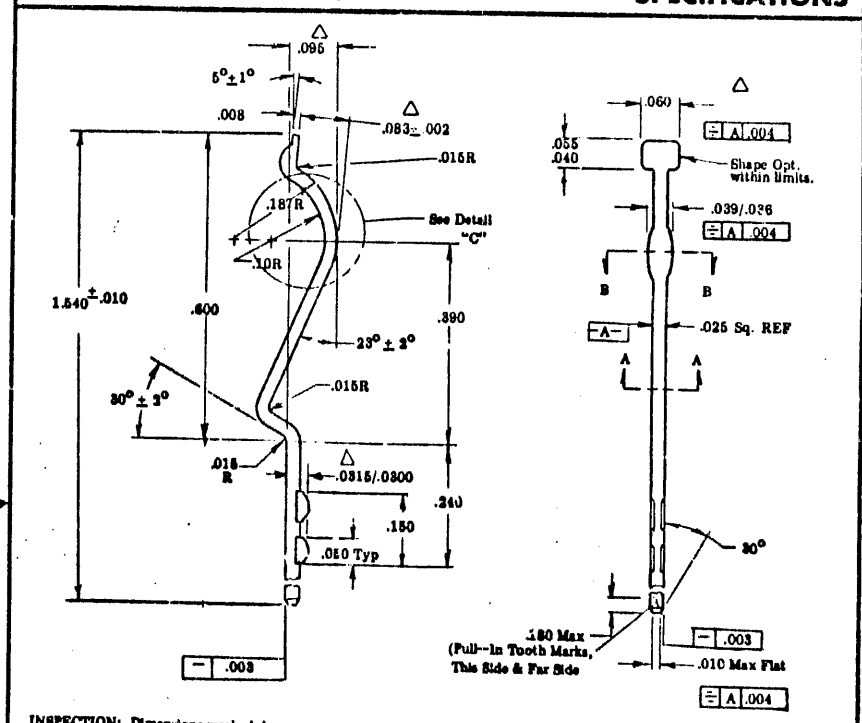

INSPECTION: Dimensions marked Δ (5 Places) are critical.

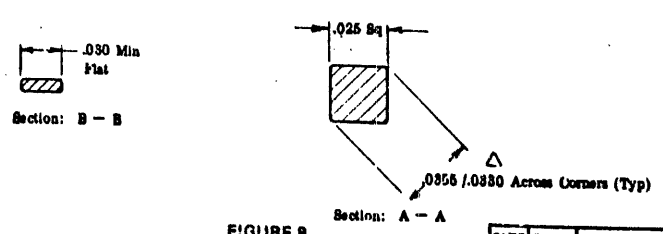

Section: B – B

Section: A – A

FIGURE 8
CONFIGURATION & DIMENSIONS
CONTACT (RIGHT HAND)
(1206348–10)

SIZE	CODE	NUMBER	REV
A	PS	1206348–0–0	L

PAGE 12 OF 13

EN-01040-1-00-N173(401)

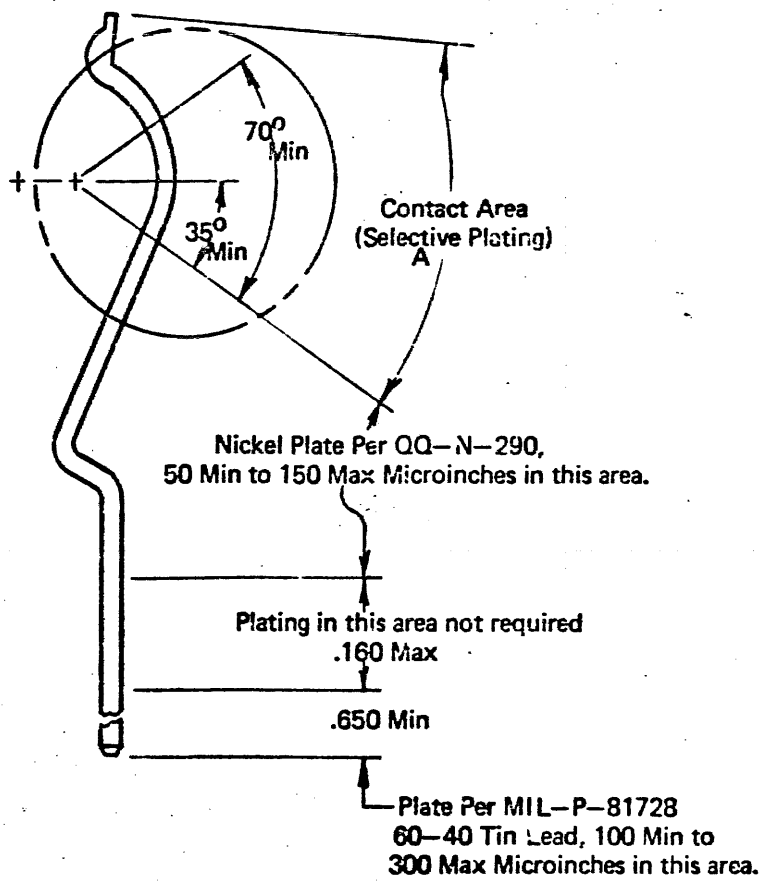

DETAIL "C"

(FINISH REQUIREMENTS)

FIGURE 8 (Continued

CONFIGURATION & DIMENSIONS

CONTACT

(RIGHT HAND)

(1205348—10)

SIZE	CODE	NUMBER	REV
A	PS	1205348-0-0	L

This drawing and specifications, herein, are the property of Digital Equipment Corporation and shall not be reproduced or copied or used in whole or in part as the basis for the manufacture or sale of items without written permission. 1316

SIZE	CODE	NUMBER	REV.
K	WL	TRØ7-A-19	

FIRST USED ON OPTION MODEL	QTY.	DESCRIPTION	PART NO.	ITEM NO.
PDP-8/E	•	PARTS LIST		

DRN.	DATE 6-21-72	
CHK'D.	DATE 11/9/76	
ENG.	DATE 12-3-76	
PROJ. ENG.	DATE 12-3-76	
PROD.	DATE 12-3-76	
NEXT HIGHER ASSEMBLY D-AD-7013090-0-0		
SCALE —		
SHEET 1 OF 1		

digital EQUIPMENT CORPORATION
MAYNARD, MASSACHUSETTS

TITLE
WIRE LIST
(PEC FORMATTER INTERFACE)

SIZE	CODE	NUMBER	REV.
K	WL	TRØ7-A-19	

DIST.

REVISIONS		
REV.	CHANGE NO.	CHK

DEC FORM NO. DRB 109

This drawing and specifications, herein, are the property of Digital Equipment Corporation and shall not be reproduced or copied or used in whole or in part as the basis for the manufacture or sale of items without written permission.

	1	2	3	4	5	6	7	8	9	10	11	12	13	14	15	16	17	18	19	20	21	22	23	24	25	26	27	28	29	30	31	32
A	M904	M904	M904			M921 ◇	M103	M103	M113	M115	M112	M602	M216	M216	M216	M112	M216	M216	M602	M115	M602	M302	M302			M111	M101	M906 unused term	M912 #1 △	M912 #1 △	M912 #2 △	M912 #2 △
	✱	✱	✱																													
	← OUT →																															
B	M904	M904	M904	M904	M904	M101	M101	M111	M611	M216	M216	M161	M113	M216	M216	M113	M216	M112	M205	M112	M121	M121	M216	M216	M113	M611	M101	M906 unused term				
	✱	✱	✱	✱	✱																											
	← IN →																															
C	M908 □	M623	M623	M623	M623	M623	M111						M216	M602	M119	M111	M602	M205	M205	M121	M121	M623	M623	M623								
D																						M050	M050	M908 0								

NOTES:

✱ PDP8/E BUS
△ FORMATTER BUS
O INDICATOR CABLE
□ DATA ADDRESS JUMPERS
◇ DEVICE CODE JUMPERS

FIRST USED ON OPTION MODEL	QTY.	DESCRIPTION	PART NO.	ITEM NO.
PDP-8/E		PARTS LIST		

DRN.	DATE 6-15-76	EQUIPMENT CORPORATION MAYNARD, MASSACHUSETTS
CHK'D.	DATE 11/9/76	
ENG.	DATE 12-3-76	TITLE MODULE UTILIZATION
PROJ. ENG.	DATE 12-3-76	
PROD.	DATE 12-3-76	
NEXT HIGHER ASSEMBLY B-DD-TRØ7-A		SIZE B CODE MU NUMBER TRØ7-A-Ø1 REV.
SCALE		
SHEET OF		DIST.

REVISIONS: REV. | CHANGE NO. | CHK

DEC FORM NO. DRB 109

DIGITAL EQUIPMENT CORPORATION
MAYNARD, MASSACHUSETTS

PARTS LIST

MADE BY [illegible]	CHECKED [illegible]	SECTION 1
DATE 6/8/76	DATE [illegible]	
ENG [illegible]	PROD [illegible]	ISSUED SECT. 1
DATE 12-3-76	DATE 12-[illegible]	

ITEM NO.	DWG NO./PART NO.	DESCRIPTION	QUANTITY/VARIATION
	MØ5J	50 MA. INDICATOR DRIVER	2
	M1Ø1	BUS DATA INTERFACE	4
	M1Ø3	DEVICE SELECTOR	2
	M111	INVERTER	4
	M112	NOR GATES	4
	M113	NAND GATES	4
	M115	NAND GATES	2
	M119	NAND GATES	1
	M121	AND/OR GATES	4
	M161	BINARY-TO-OCTAL/DECIMAL DECODER	1
	M2Ø5	GENERAL PURPOSE FLIP-FLOPS	3
	M216	SIX FLIP-FLOPS	13
	M6Ø2	PULSE AMPLIFIER	5
	M611	HIGH-SPEED POWER INVERTER	2
	M623	BUS DRIVER	8
	M9Ø6	CABLE TERMINATOR	2
	M9Ø8	FLAT RIBBON CABLE CONNECTOR	2
	M921	DEVICE CODE SELECT JUMPER BOARD	1
	M3Ø2Ø	DUAL DELAY MULTIVIBRATORS	2
	M912	CABLE CONNECTOR CARD	2

TITLE	ASSY NO.	SIZE	CODE	NUMBER	REV.	ECO NO.
MODULE UTILIZATION	B-MU-TRØ7-A -Ø1	A	PL	TRØ7-A -Ø1		
	SHEET 1 OF 1	DIST.				

DEC FORM DEC 16-(325)-1031-N870
DRA 110

"THIS DRAWING AND SPECIFICATIONS HEREIN, ARE THE PROPERTY OF DIGITAL EQUIPMENT CORPORATION AND SHALL NOT BE REPRODUCED OR COPIED OR USED IN WHOLE OR IN PART AS THE BASIS FOR THE MANUFACTURE OR SALE OF ITEMS WITHOUT WRITTEN PERMISSION
COPYRIGHT © 1973 DIGITAL EQUIPMENT CORPORATION"

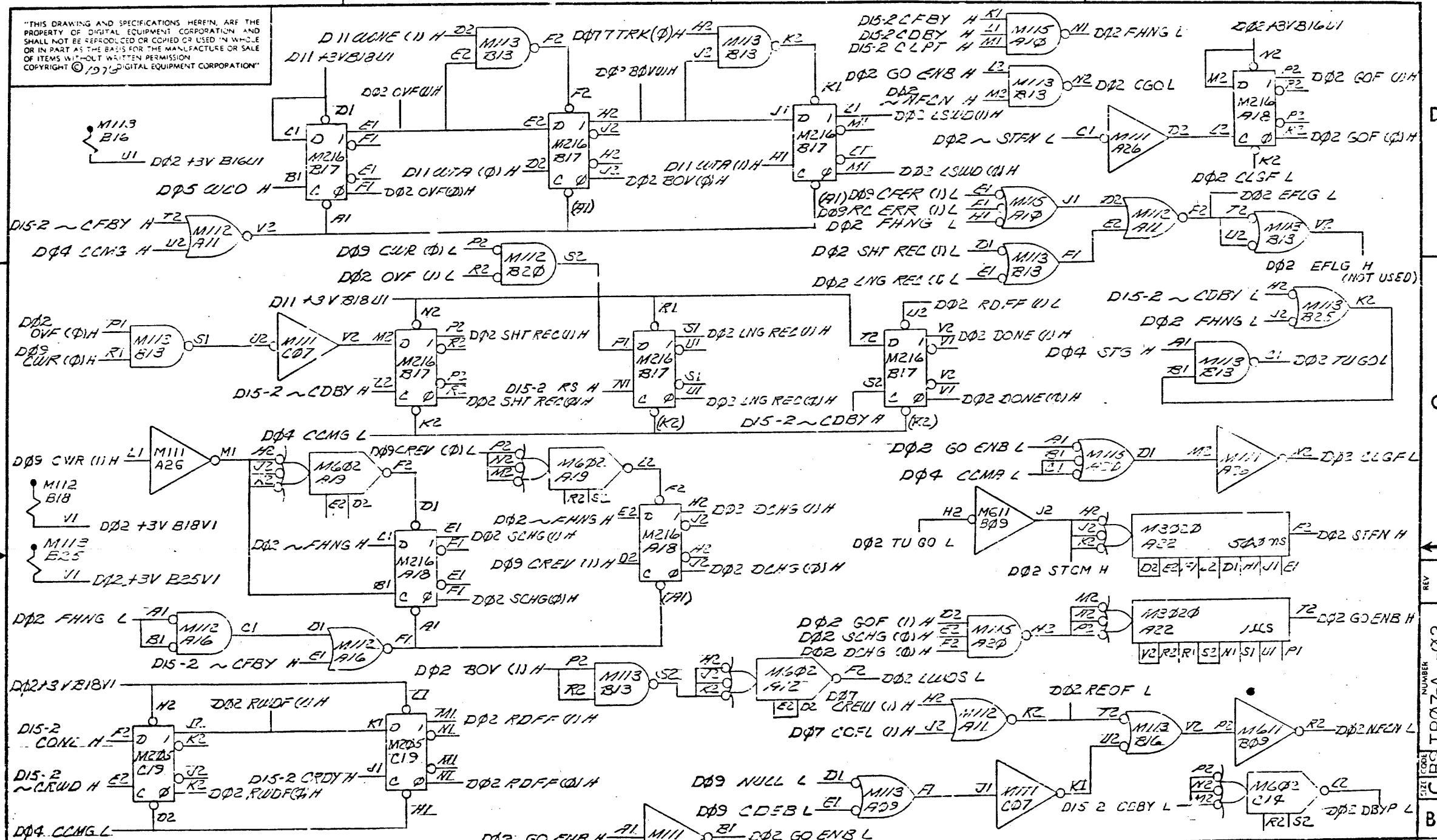

FIRST USED ON OPTION/MODEL	QTY.	DESCRIPTION	PART NO.	ITEM NO.
PDP-8/E		PARTS LIST		

UNLESS OTHERWISE SPECIFIED DIMENSION IN INCHES

TOLERANCES

DECIMALS	ANGLES
.xxx = .005 .xx = .02 .x = .1	±0° 30'

REMOVE BURRS AND BREAK SHARP CORNERS SURFACE QUALITY 8

MATERIAL —/—

FINISH —/—

		DATE
DRN.		
CHK D.		
ENG.		
PROJ. ENG.		
PROD.		

digital EQUIPMENT CORPORATION MAYNARD MASSACHUSETTS

TITLE

FORMAT CONTROL

NEXT HIGHER ASSY. B-DDTRØ7-A

SCALE —/—

SHEET 1 OF 1

SIZE	CODE	NUMBER	REV.
C	BS	TRØ7-A -Ø2	

DIST

REVISIONS: REV. | CHANGE NO. | CHK

TRØ7-A -Ø2

"THIS DRAWING AND SPECIFICATIONS, HEREIN, ARE THE PROPERTY OF DIGITAL EQUIPMENT CORPORATION AND SHALL NOT BE REPRODUCED OR COPIED OR USED IN WHOLE OR IN PART AS THE BASIS FOR THE MANUFACTURE OR SALE OF ITEMS WITHOUT WRITTEN PERMISSION.
COPYRIGHT © 1976 DIGITAL EQUIPMENT CORPORATION"

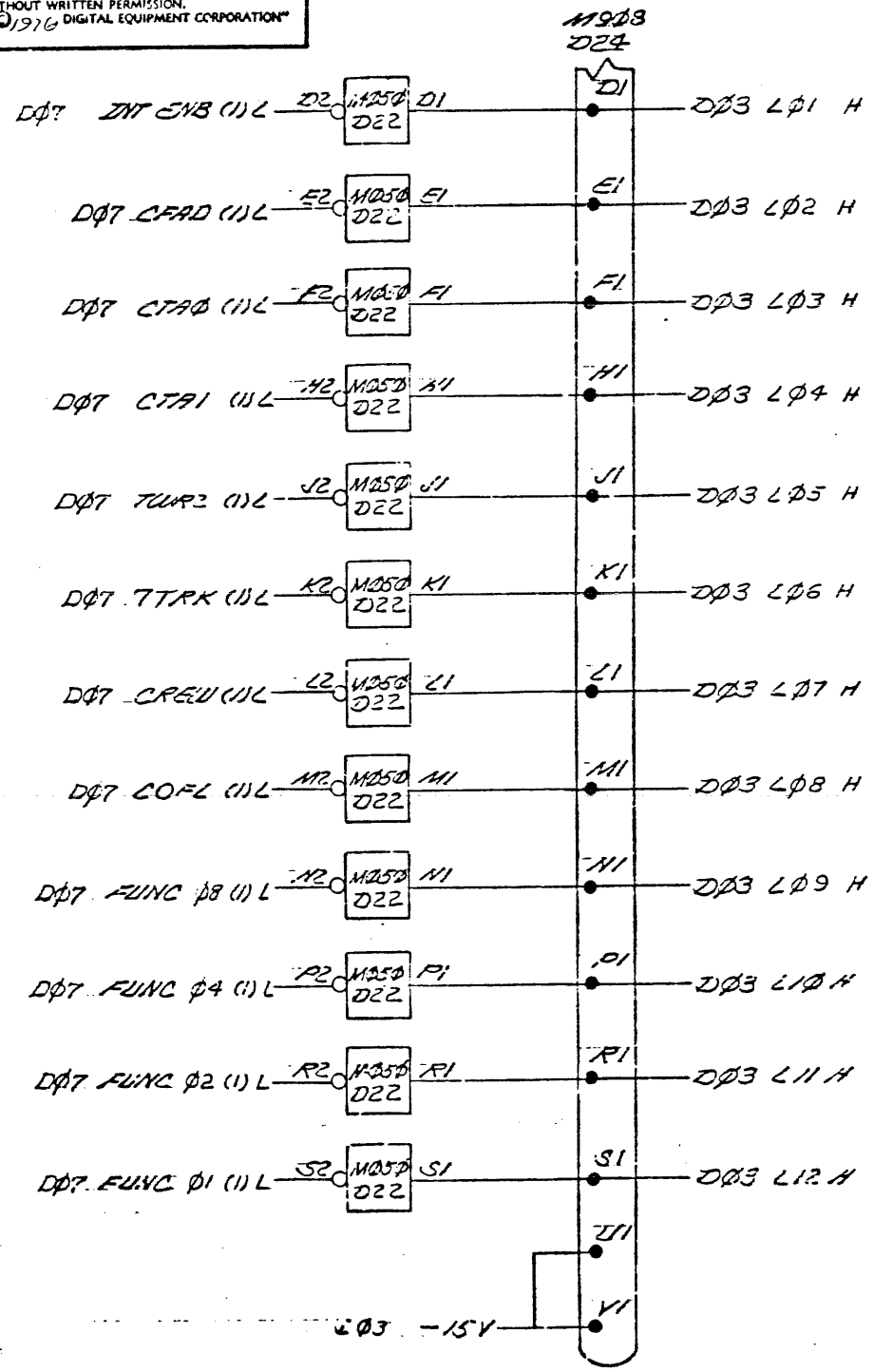

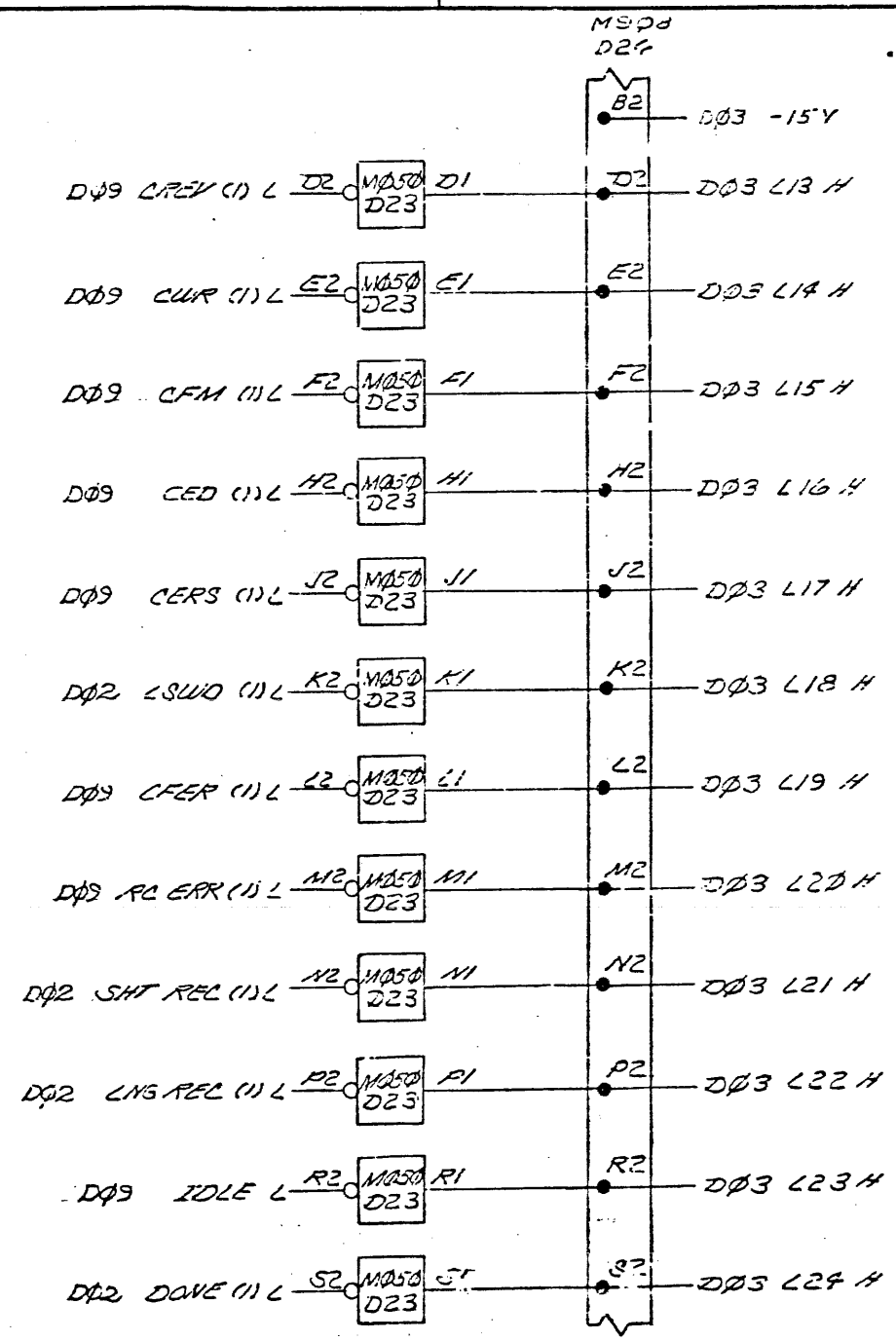

DRN		FIRST USED ON P0P-8/E
CHK'D		TITLE INDICATOR DRIVERS
ENG		
PROJ ENG.		
PROD.		
NEXT HIGHER ASSY.	B-DD-TR07-A	SIZE C CODE B3 NUMBER TR07-A -03 REV.
SCALE		
SHEET 1 OF 1		DIST.

digital

REVISIONS: REV. / CHANGE NO. / CHK

SIZE C CODE B3 NUMBER TRØ7-A Ø3 REV.

"THIS DRAWING AND SPECIFICATIONS, HEREIN, ARE THE PROPERTY OF DIGITAL EQUIPMENT CORPORATION AND SHALL NOT BE REPRODUCED OR COPIED OR USED IN WHOLE OR IN PART AS THE BASIS FOR THE MANUFACTURE OR SALE OF ITEMS WITHOUT WRITTEN PERMISSION.
COPYRIGHT © 1969 DIGITAL EQUIPMENT CORPORATION"

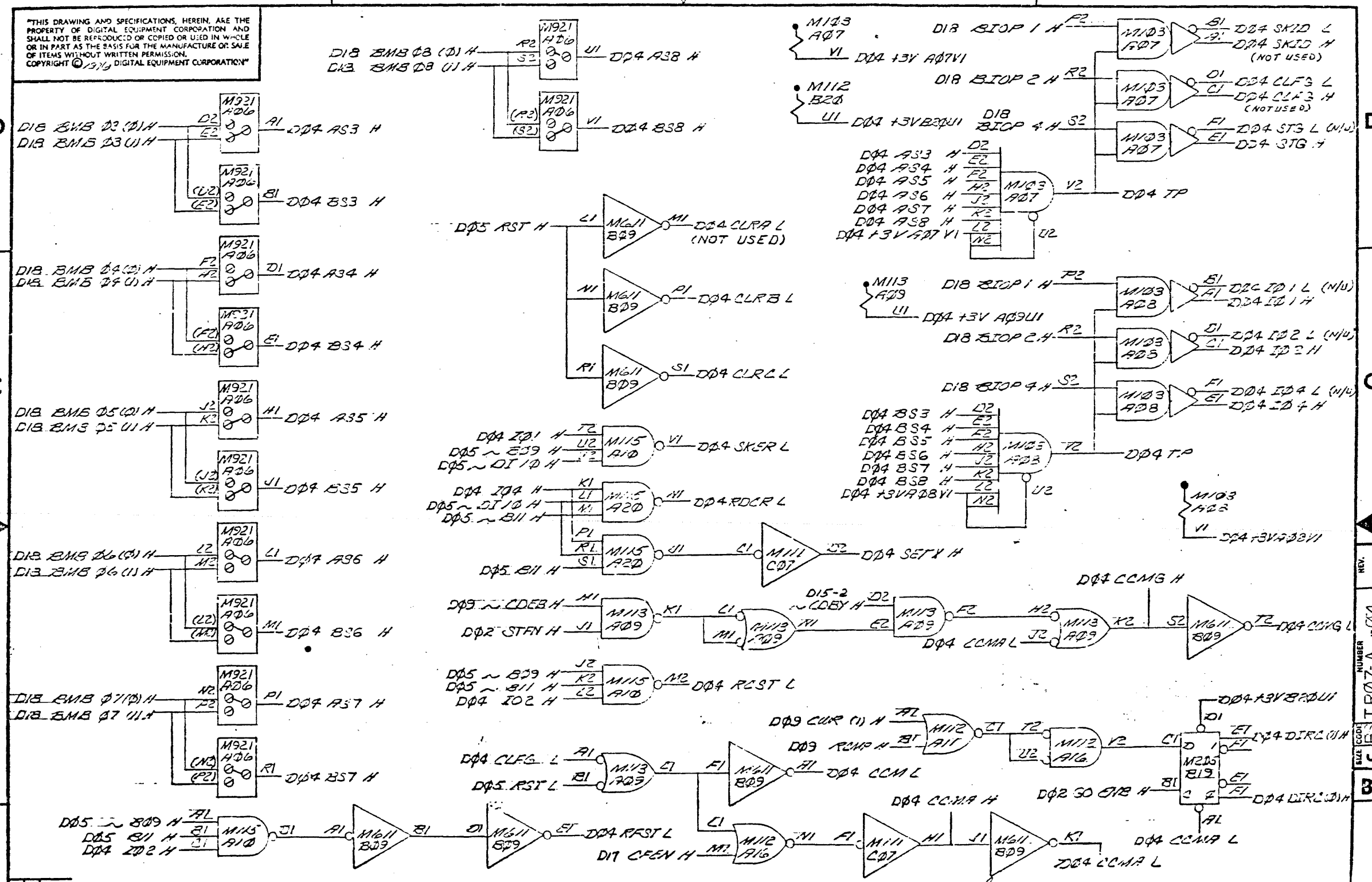
M921 A06
D18 BMB Ø3 (Ø) H
D18 BMB Ø3 (1) H
D4 AS3 H
D4 BS3 H
D18 BMB Ø4 (Ø) H
D18 BMB Ø4 (1) H
D4 AS4 H
D4 BS4 H
D18 BMB Ø5 (Ø) H
D18 BMB Ø5 (1) H
D4 AS5 H
D4 BS5 H
D18 BMB Ø6 (Ø) H
D18 BMB Ø6 (1) H
D4 AS6 H
D4 BS6 H
D18 BMB Ø7 (Ø) H
D18 BMB Ø7 (1) H
D4 AS7 H
D4 BS7 H
D18 BMB Ø8 (Ø) H
D18 BMB Ø8 (1) H
D4 AS8 H
D4 BS8 H
D5 RST H
M611 B09
D4 CLRA L
(NOT USED)
D4 CLRB L
D4 CLRC L
M115 A10
D4 SKER L
D4 RDCR L
M111 C07
D4 SETX H
M113 A09
D9 CDEB H
D2 STFN H
D15-2 CDBY H
D4 CCMA L
D4 CCMG H
D4 CCMG L
D4 RCST L
D4 RFST L
D17 CFEN H
D4 CLFG L
D4 CCM L
D9 CUR (1) H
D9 RCMP H
M112 A17
M112 A16
M205 B19
D4 DIRC (1) H
D4 DIRC (Ø) H
D2 GO ENB H
D4 CCMA H
D4 CCMA L
M103 A07
M103 A08
M103 A05
M103 A02
D18 BIOP 1 H
D18 BIOP 2 H
D18 BIOP 4 H
D4 SKID L
D4 SKID H
(NOT USED)
D4 CLFG L
D4 CLFG H
(NOT USED)
D4 STG L (N/U)
D4 STG H
D4 TP
D4 IØ 1 L (N/U)
D4 IØ 1 H
D4 IØ 2 L (N/U)
D4 IØ 2 H
D4 IØ 4 L (N/U)
D4 IØ 4 H
M113 A09
M113 A07
M113 A08
M113 A05
M113 A02
M111 C07
M611 B09
M112 A17
M112 A16
M205 B19
M115 A10
M115 A20
M115 A20
M115 A10
M921 A06
D4 +3V A07 V1
D4 +3V B20 U1
D4 +3V A09 U1
D4 +3V A08 V1
D4 +3V A03 V1
D4 +3V B20 U1
D4 +3V B20 U1
M111 A03
M111 A02
M111 A07
M111 A09
M111 A08
M111 A05
M111 A02

"THIS DRAWING AND SPECIFICATIONS, HEREIN, ARE THE PROPERTY OF DIGITAL EQUIPMENT CORPORATION AND SHALL NOT BE REPRODUCED OR COPIED OR USED IN WHOLE OR IN PART AS THE BASIS FOR THE MANUFACTURE OR SALE OF ITEMS WITHOUT WRITTEN PERMISSION.
COPYRIGHT © 1970 DIGITAL EQUIPMENT CORPORATION"

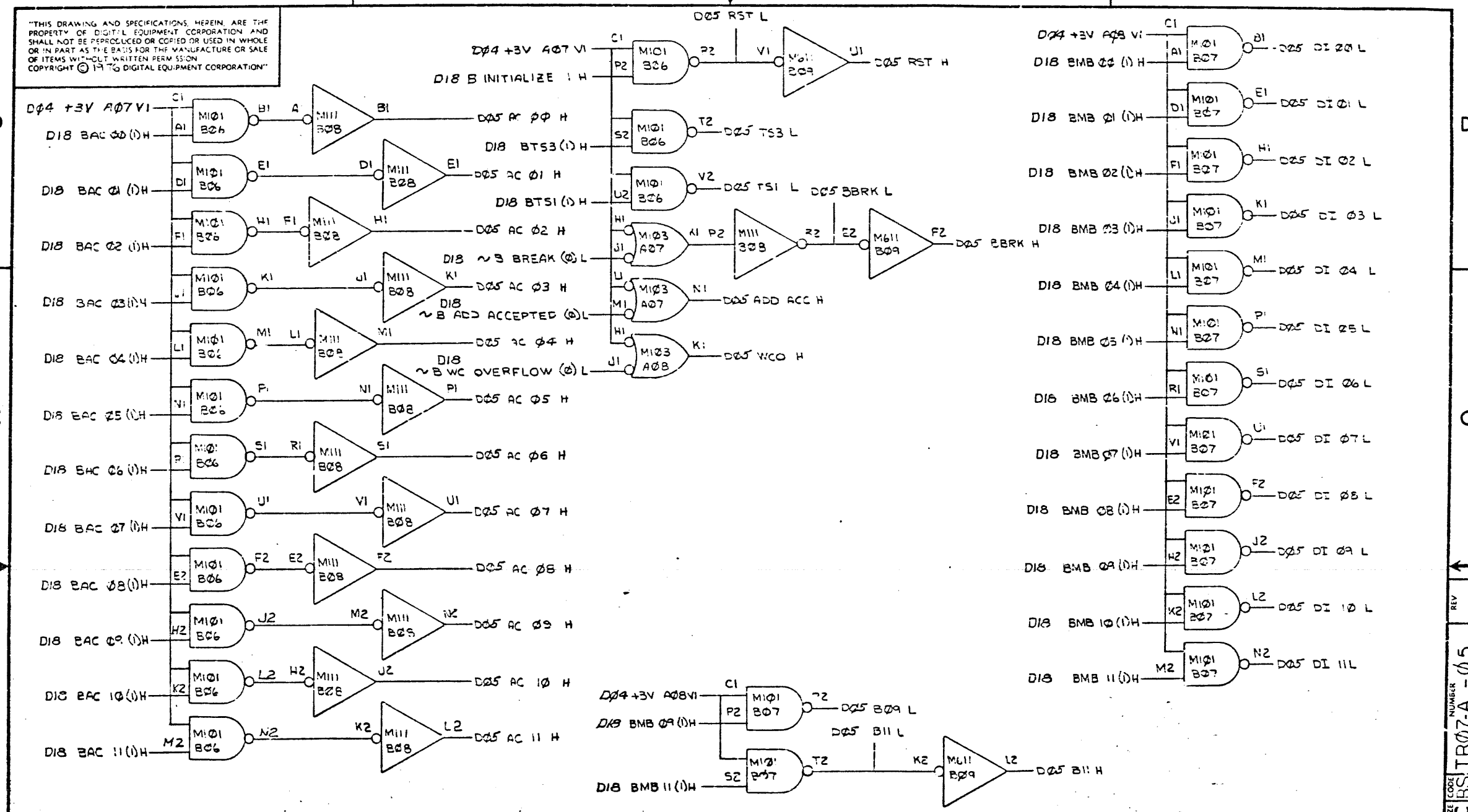

FIRST USED ON OPTION/MODEL	QTY.	DESCRIPTION	PART NO.	ITEM NO.
PDP 8/E		PARTS LIST		

UNLESS OTHERWISE SPECIFIED DIMENSION IN INCHES

TOLERANCES

DECIMALS	ANGLES
.xxx = .005	±0° 30'
.xx = .02	
.x = .1	

REMOVE BURRS AND BREAK SHARP CORNERS SURFACE QUALITY V

MATERIAL

FINISH

DRN.	DATE 6-17-70	digital EQUIPMENT CORPORATION MAYNARD MASSACHUSETTS
CHK'D.	DATE	
ENG.	DATE	TITLE FROM 8
PROJ. ENG.	DATE	
PROD.	DATE	

NEXT HIGHER ASSY. B-DD-TR07-A

SCALE NONE

SHEET 1 OF 1

SIZE	CODE	NUMBER	REV.
C	BS	TR07-A-05	

DIST

REVISIONS	CHANGE NO.	REV.	CHK

SIZE C CODE BS NUMBER TR07-A-05 REV.

DEC FORM NO. DRC 111

"THIS DRAWING AND SPECIFICATIONS, HEREIN, ARE THE PROPERTY OF DIGITAL EQUIPMENT CORPORATION AND SHALL NOT BE REPRODUCED OR COPIED OR USED IN WHOLE OR IN PART AS THE BASIS FOR THE MANUFACTURE OR SALE OF ITEMS WITHOUT WRITTEN PERMISSION.
COPYRIGHT © 1973 DIGITAL EQUIPMENT CORPORATION"

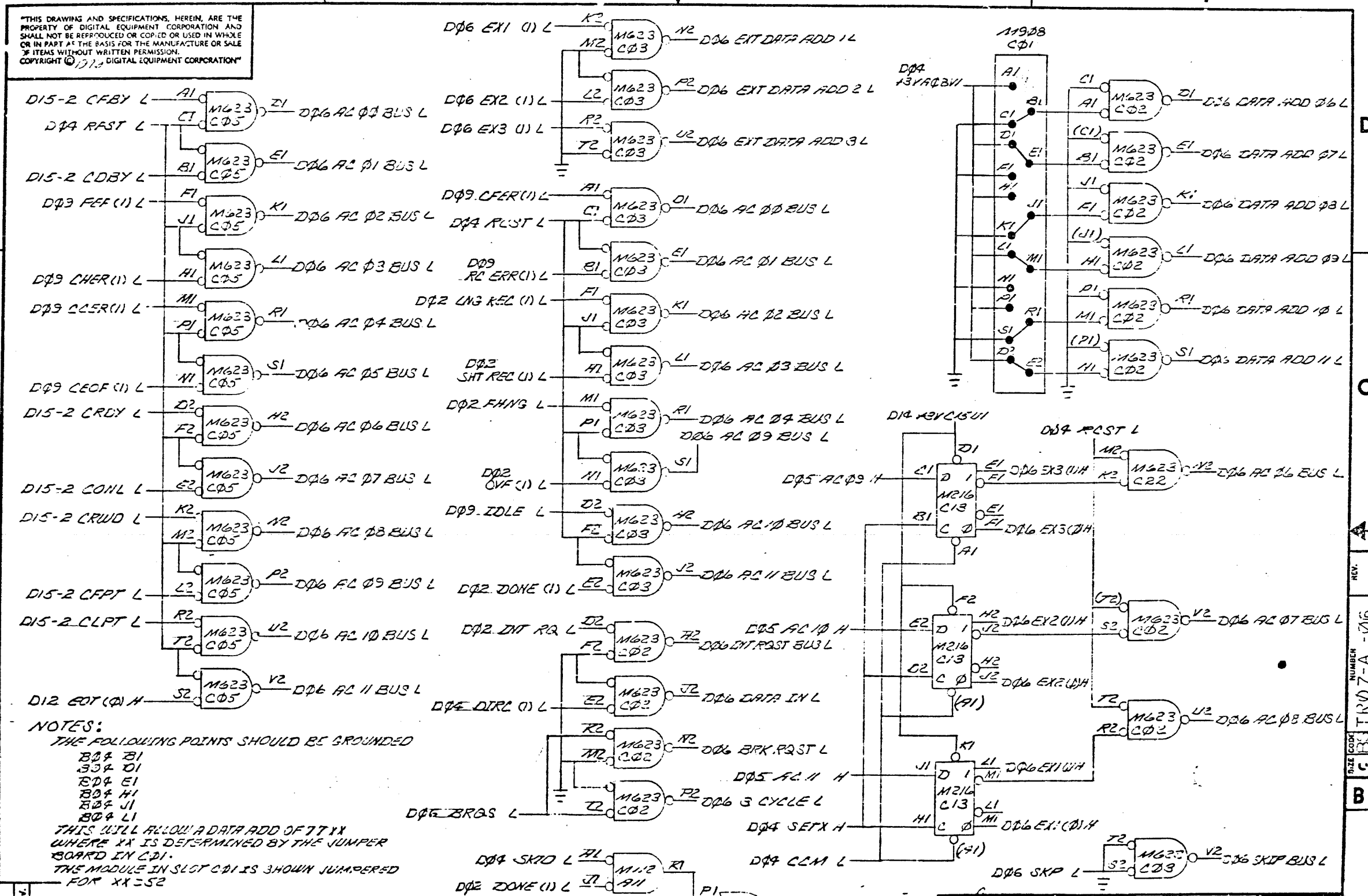

"THIS DRAWING AND SPECIFICATIONS, HEREIN, ARE THE PROPERTY OF DIGITAL EQUIPMENT CORPORATION AND SHALL NOT BE REPRODUCED OR COPIED OR USED IN WHOLE OR IN PART AS THE BASIS FOR THE MANUFACTURE OR SALE OF ITEMS WITHOUT WRITTEN PERMISSION.
COPYRIGHT © 1970 DIGITAL EQUIPMENT CORPORATION"

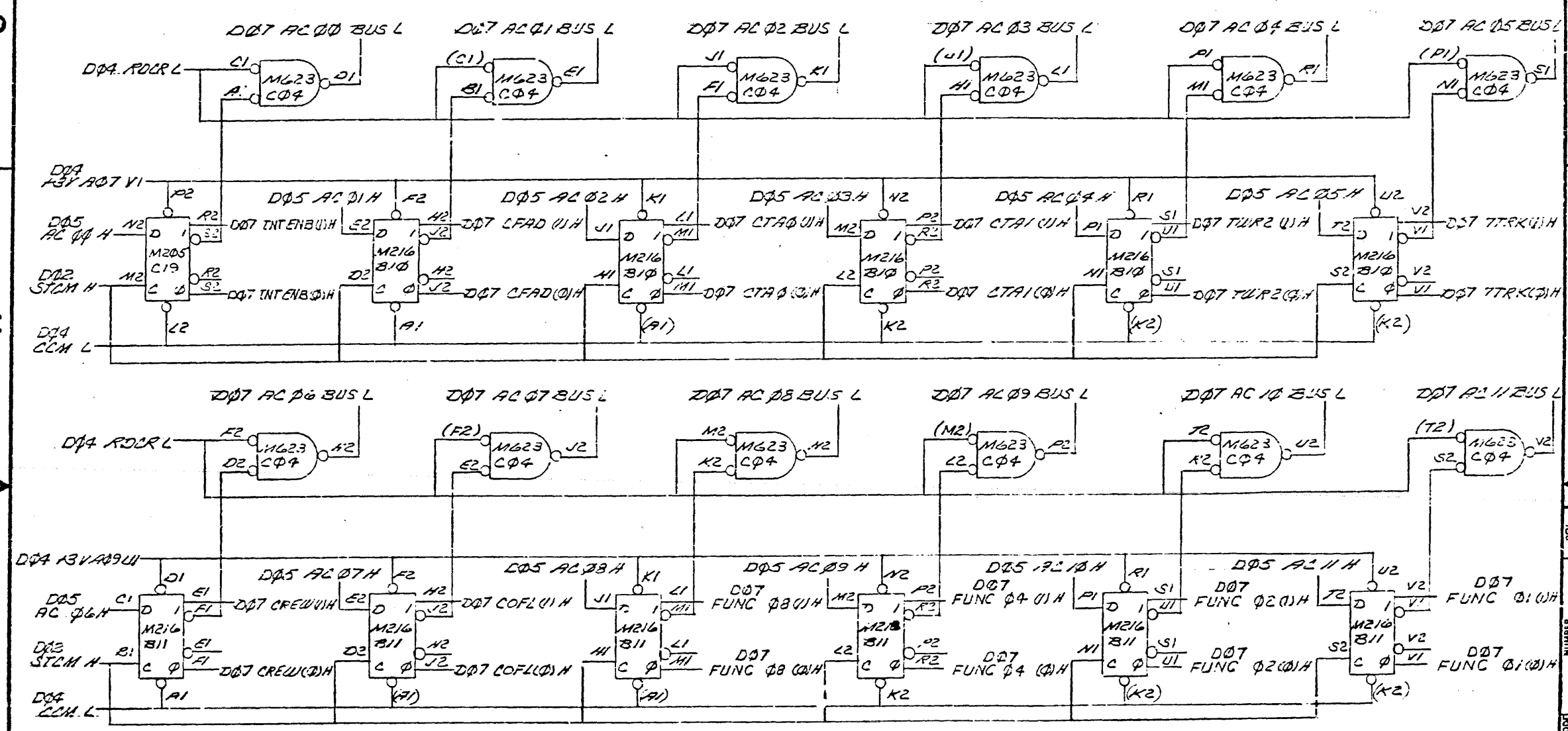

DRN		FIRST USED ON: FDP-8/E
CHK'D		digital
ENG.		TITLE: COMMAND REG
PROJ. ENG.		
PROD.		
NEXT HIGHER ASSY.	B-DP-TR07-A	SIZE C · CODE BS · NUMBER TR07-A -07 · REV.
SCALE		
SHEET	OF	DIST.

REVISIONS: REV. | CHANGE NO. | CHK

REV. | NUMBER TR07-A -07 | CODE BS | SIZE C

"THIS DRAWING AND SPECIFICATIONS, HEREIN, ARE THE PROPERTY OF DIGITAL EQUIPMENT CORPORATION AND SHALL NOT BE REPRODUCED OR COPIED OR USED IN WHOLE OR IN PART AS THE BASIS FOR THE MANUFACTURE OR SALE OF ITEMS WITHOUT WRITTEN PERMISSION
COPYRIGHT © 1 - 9, DIGITAL EQUIPMENT CORPORATION"

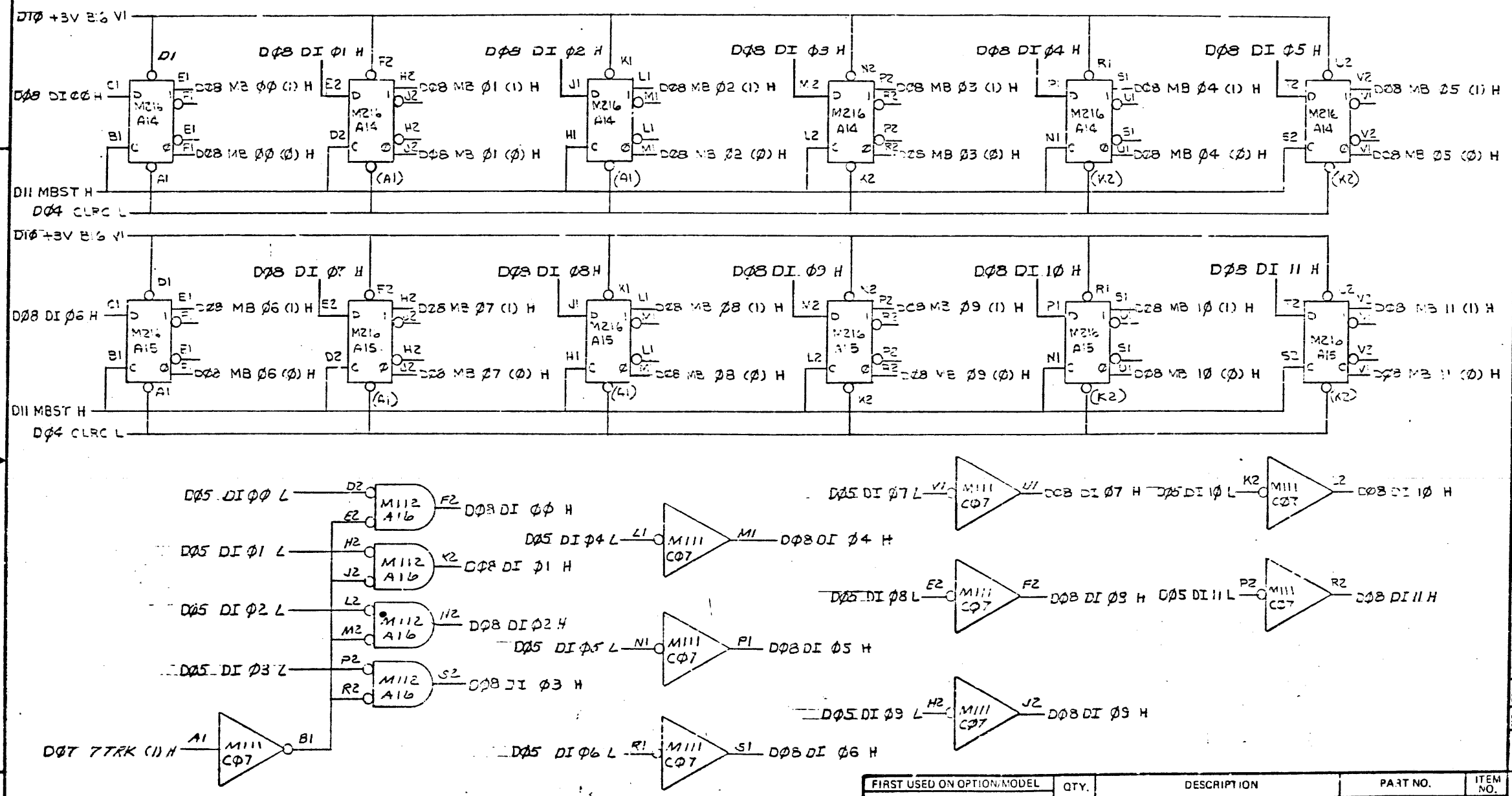

FIRST USED ON OPTION/MODEL	QTY.	DESCRIPTION	PART NO.	ITEM NO.
PDP-8/E		PARTS LIST		

UNLESS OTHERWISE SPECIFIED DIMENSION IN INCHES

TOLERANCES

DECIMALS	ANGLES
.xxx = .005 .xx = .02 .x = .1	±0° 30'

REMOVE BURRS AND BREAK SHARP CORNERS SURFACE QUALITY ∨

MATERIAL

FINISH

DRN.		DATE 6-11-76
CHK'D.		DATE
ENG.		DATE
PROJ. ENG.		DATE
PROD.		DATE

NEXT HIGHER ASSY. B-DD-TRØ7-A

SCALE

SHEET 1 OF 1

digital EQUIPMENT CORPORATION MAYNARD MASSACHUSETTS

TITLE MEMORY BUFFER

SIZE	CODE	NUMBER	REV.
C	RS	TRØ7-A -Ø8	

DIST

REVISIONS: REV | CHANGE NO. | CHK

DEC 1DRM NO
DEC 111

"THIS DRAWING AND SPECIFICATIONS, HEREIN, ARE THE PROPERTY OF DIGITAL EQUIPMENT CORPORATION AND SHALL NOT BE REPRODUCED OR COPIED OR USED IN WHOLE OR IN PART AS THE BASIS FOR THE MANUFACTURE OR SALE OF ITEMS WITHOUT WRITTEN PERMISSION.
COPYRIGHT © 1976 DIGITAL EQUIPMENT CORPORATION"

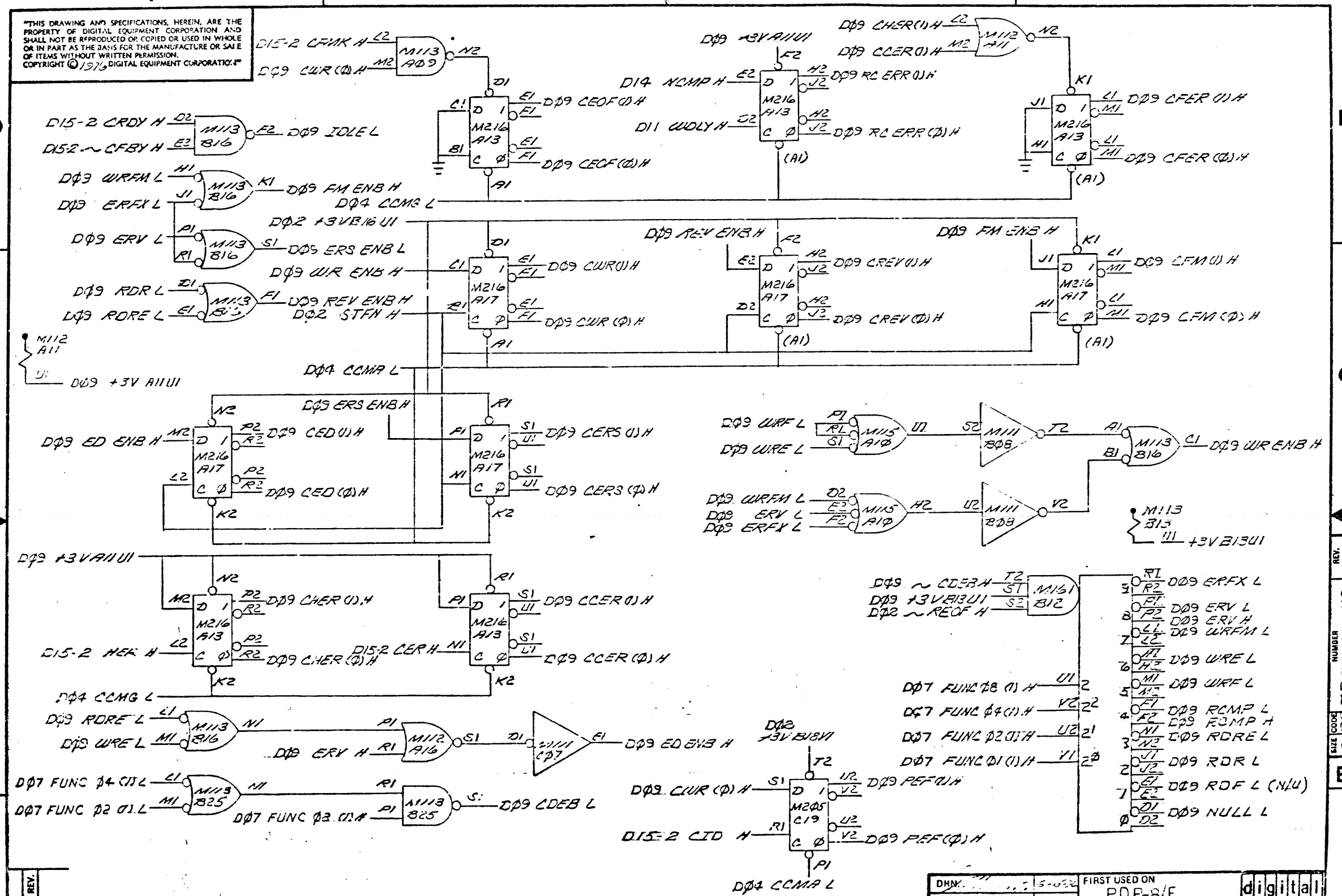

DRN.		FIRST USED ON PDP-8/E	digital
CHK'D		TITLE FORMAT CONTROL	
ENG.			
PROJ. ENG.			
PROD.			
NEXT HIGHER ASSY B-BS-TR07-A		SIZE C	CODE BS	NUMBER TR07-A -09	REV.
SCALE			
SHEET	OF	DIST.	

REVISIONS: REV. | CHANGE NO. | INIT.

REV. | NUMBER TR07-A -09 | SIZE C | CODE BS

"THIS DRAWING AND SPECIFICATIONS, HEREIN, ARE THE PROPERTY OF DIGITAL EQUIPMENT CORPORATION AND SHALL NOT BE REPRODUCED OR COPIED OR USED IN WHOLE OR IN PART AS THE BASIS FOR THE MANUFACTURE OR SALE OF ITEMS WITHOUT WRITTEN PERMISSION
COPYRIGHT © 1975, DIGITAL EQUIPMENT CORPORATION"

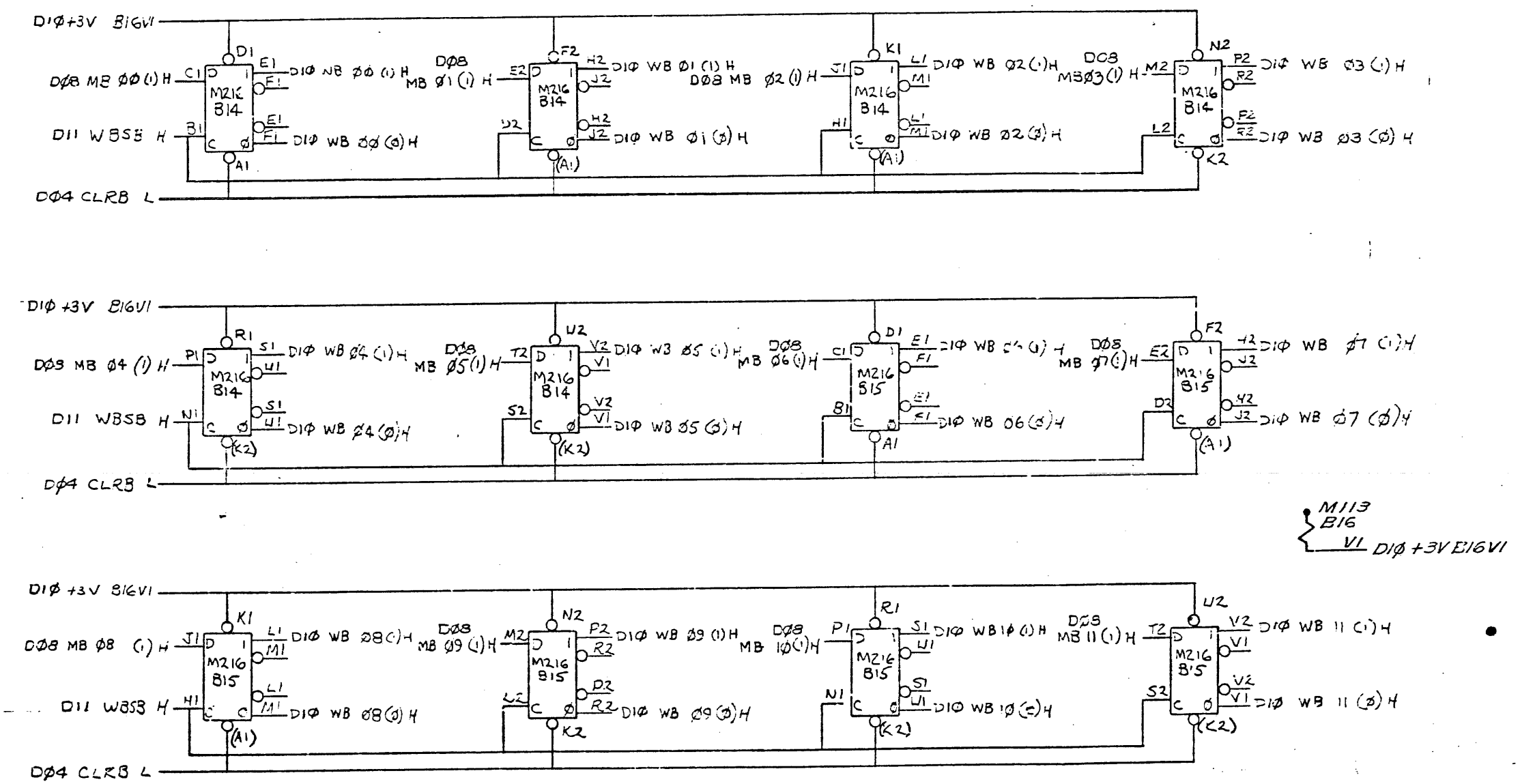

FIRST USED ON OPTION/MODEL	QTY.	DESCRIPTION	PART NO.	ITEM NO.
PDP-8/E		PARTS LIST		

UNLESS OTHERWISE SPECIFIED DIMENSION IN INCHES

TOLERANCES

DECIMALS	ANGLES
.xxx = .005 .xx = .02 .x = .1	±0° 30'

REMOVE BURRS AND BREAK SHARP CORNERS SURFACE QUALITY ✓

MATERIAL —SS—

FINISH —SS—

DRN.	DATE 6-10-7	digital EQUIPMENT CORPORATION MAYNARD MASSACHUSETTS
CHK'D.	DATE	
ENG.	DATE	TITLE WRITE BUFFER
PROJ. ENG.	DATE	
PROD.	DATE	

NEXT HIGHER ASSY. B-DD-TRØ7-A

SCALE —

SHEET 1 OF 1

SIZE	CODE	NUMBER	REV.
C	BS	TRØ7-A -1Ø	

DIST.

REVISIONS: REV. | CHANGE NO | CHK

DEC FORM NO DEC 111

SIZE C CODE BS NUMBER TRØ7-A -1Ø REV. B

"THIS DRAWING AND SPECIFICATIONS, HEREIN, ARE THE PROPERTY OF DIGITAL EQUIPMENT CORPORATION AND SHALL NOT BE REPRODUCED OR COPIED OR USED IN WHOLE OR IN PART AS THE BASIS FOR THE MANUFACTURE OR SALE OF ITEMS WITHOUT WRITTEN PERMISSION.
COPYRIGHT © 1970 DIGITAL EQUIPMENT CORPORATION"

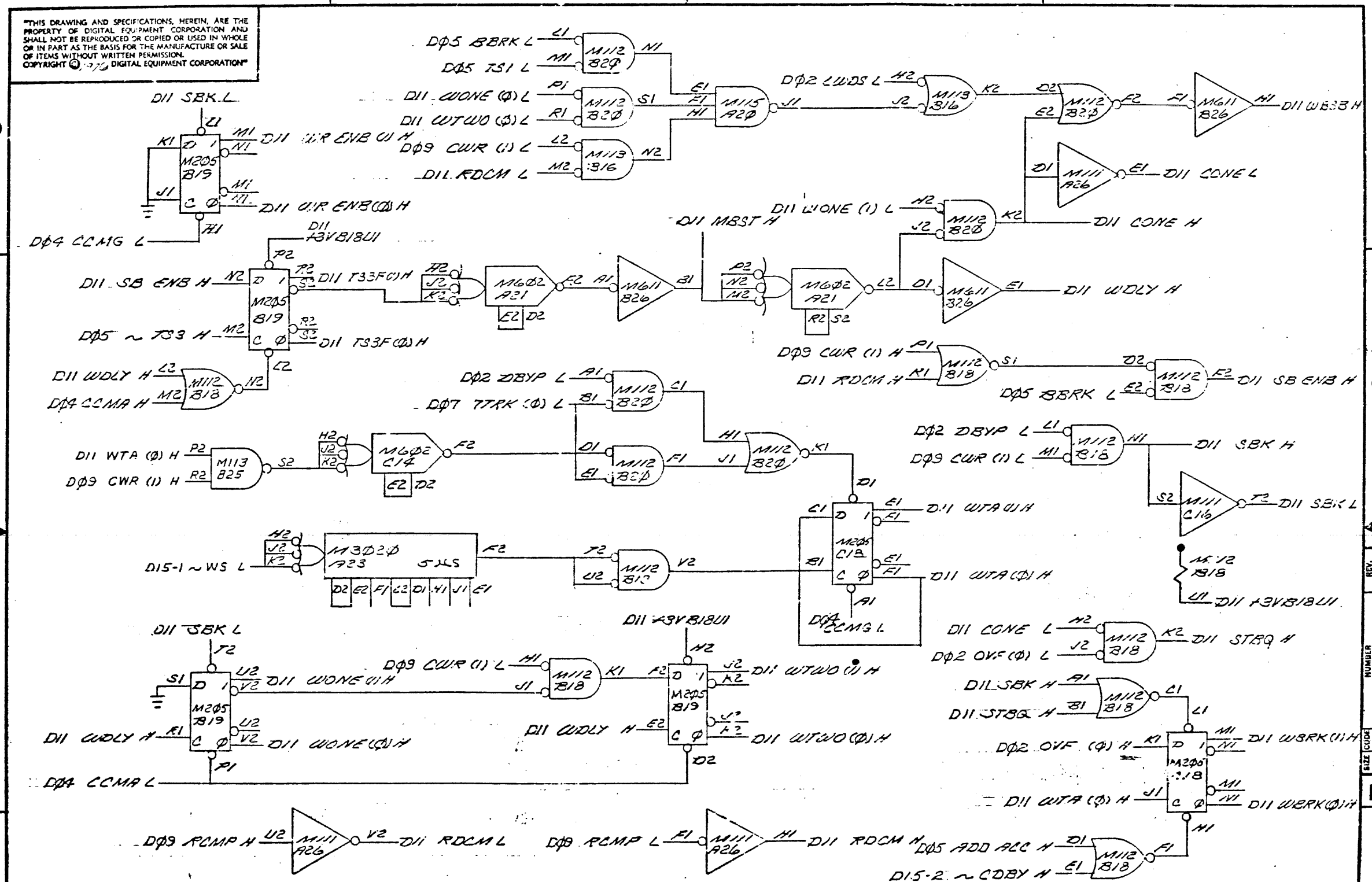

DRN		FIRST USED ON PDP-8/E	digital
CHK'D		TITLE WRITE CONTROL	
ENG.			
PROJ. ENG.			
PROD.			
NEXT HIGHER ASSY. 6-CD-TR07-A		SIZE C	CODE	NUMBER TRØ7-A-11	REV.
SCALE			
SHEET 1 OF 1		DIST.	

REV. | CHANGE NO. | CHK | REVISIONS

REV. | NUMBER TRØ7-A-11 | SIZE C | CODE

"THIS DRAWING AND SPECIFICATIONS, HEREIN, ARE THE PROPERTY OF DIGITAL EQUIPMENT CORPORATION AND SHALL NOT BE REPRODUCED OR COPIED OR USED IN WHOLE OR IN PART AS THE BASIS FOR THE MANUFACTURE OR SALE OF ITEMS WITHOUT WRITTEN PERMISSION
COPYRIGHT ©1976, DIGITAL EQUIPMENT CORPORATION"

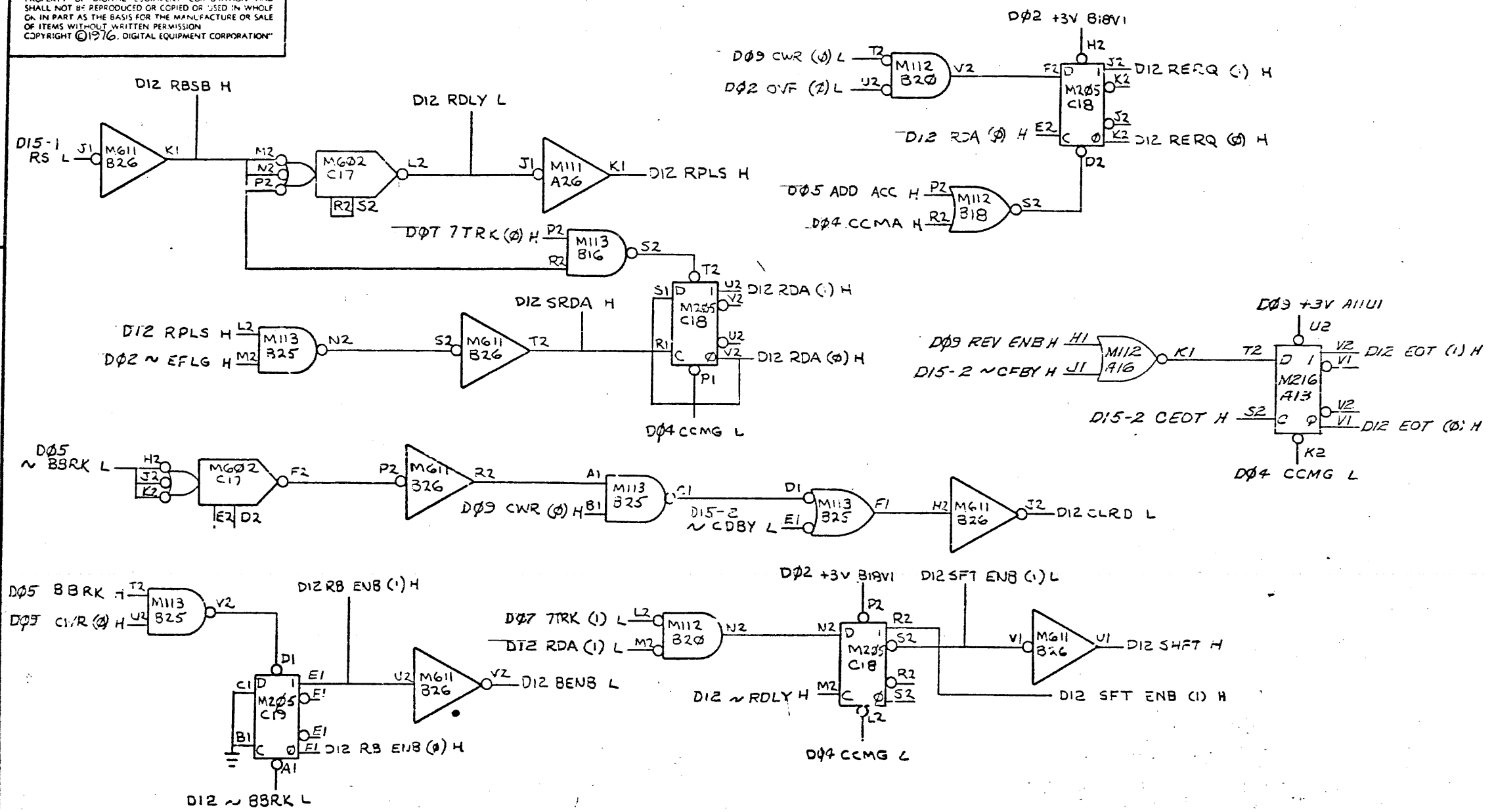

FIRST USED ON OPTION/MODEL	QTY.	DESCRIPTION	PART NO.	ITEM NO.
PDP 8/E		PARTS LIST		

UNLESS OTHERWISE SPECIFIED DIMENSION IN INCHES
TOLERANCES
DECIMALS: .xxx = .005, .xx = .02, .x = .1
ANGLES: ±0° 30'
REMOVE BURRS AND BREAK SHARP CORNERS SURFACE QUALITY ✓

MATERIAL —SS—
FINISH —SS—

DRN. S. Manicewicz DATE 3-8-76
CHK'D. DATE
ENG. DATE 12-2-76
PROJ. ENG. DATE
PROD. DATE

digital EQUIPMENT CORPORATION MAYNARD MASSACHUSETTS

TITLE READ CONTROL

NEXT HIGHER ASSY. B-DD-TRØ7-A
SCALE —SS—
SHEET 1 OF 1

SIZE	CODE	NUMBER	REV.
C	BS	TRØ7-A -12	

DIST.

REVISIONS: REV. | CHANGE NO | CHK

LEC FORM NO. DRC 111

"THIS DRAWING AND SPECIFICATIONS, HEREIN, ARE THE PROPERTY OF DIGITAL EQUIPMENT CORPORATION AND SHALL NOT BE REPRODUCED OR COPIED OR USED IN WHOLE OR IN PART AS THE BASIS FOR THE MANUFACTURE OR SALE OF ITEMS WITHOUT WRITTEN PERMISSION.
COPYRIGHT © 1976 DIGITAL EQUIPMENT CORPORATION"

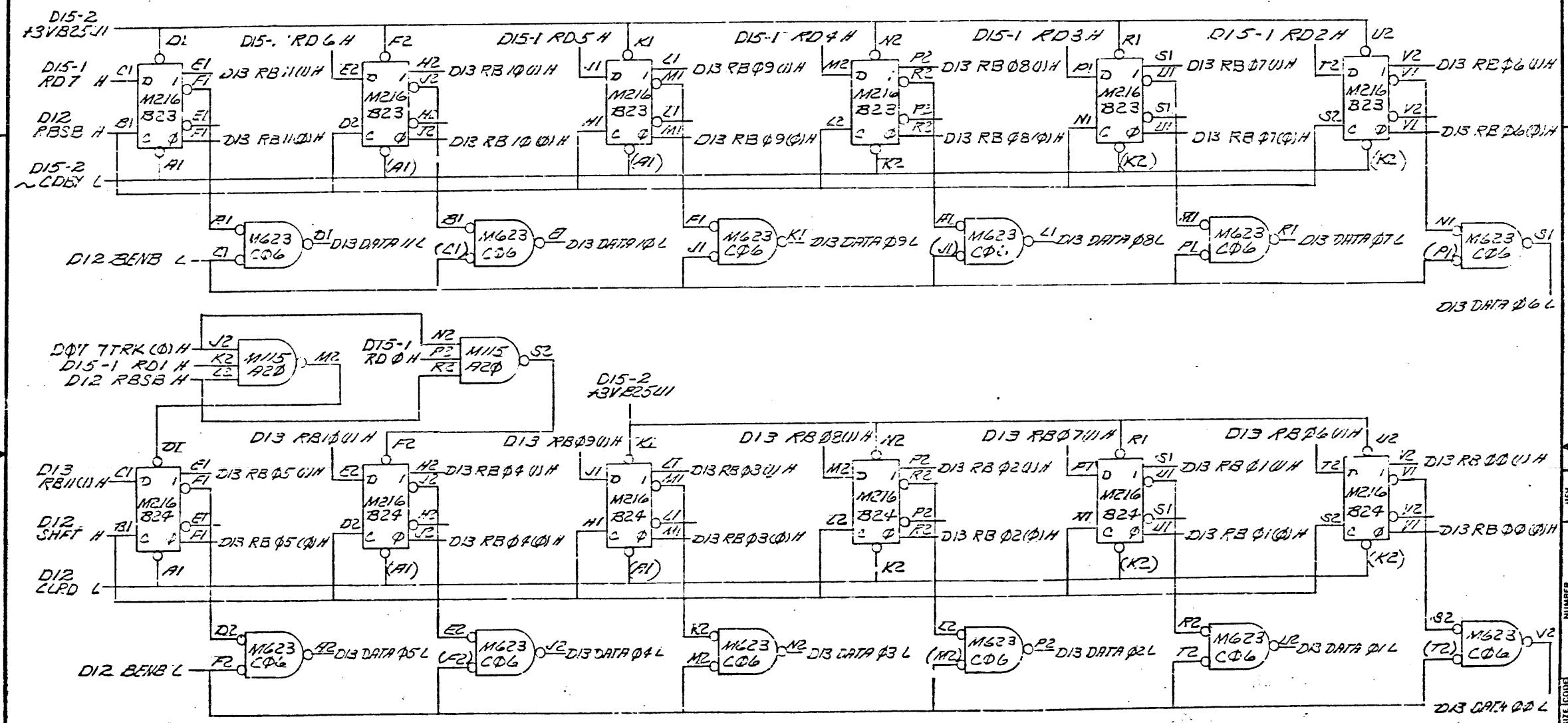

DRN.	6-14-72	FIRST USED ON PDP 8/E	digital
CHK'D		TITLE READ BUFFER	
ENG.			
PROJ. ENG.			
PROD.			
NEXT HIGHER ASSY. 8DD-TR07-A		SIZE C	CODE BS	NUMBER TR07-A-13	REV.
SCALE			
SHEET 1 OF 1		DIST.	

REVISIONS: REV. | CHANGE NO. | CHK

NUMBER TR07-A-13 SIZE C CODE BS

"THIS DRAWING AND SPECIFICATIONS, HEREIN ARE THE PROPERTY OF DIGITAL EQUIPMENT CORPORATION AND SHALL NOT BE REPRODUCED OR COPIED OR USED IN WHOLE OR IN PART AS THE BASIS FOR THE MANUFACTURE OR SALE OF ITEMS WITHOUT WRITTEN PERMISSION
COPYRIGHT © 1976 DIGITAL EQUIPMENT CORPORATION"

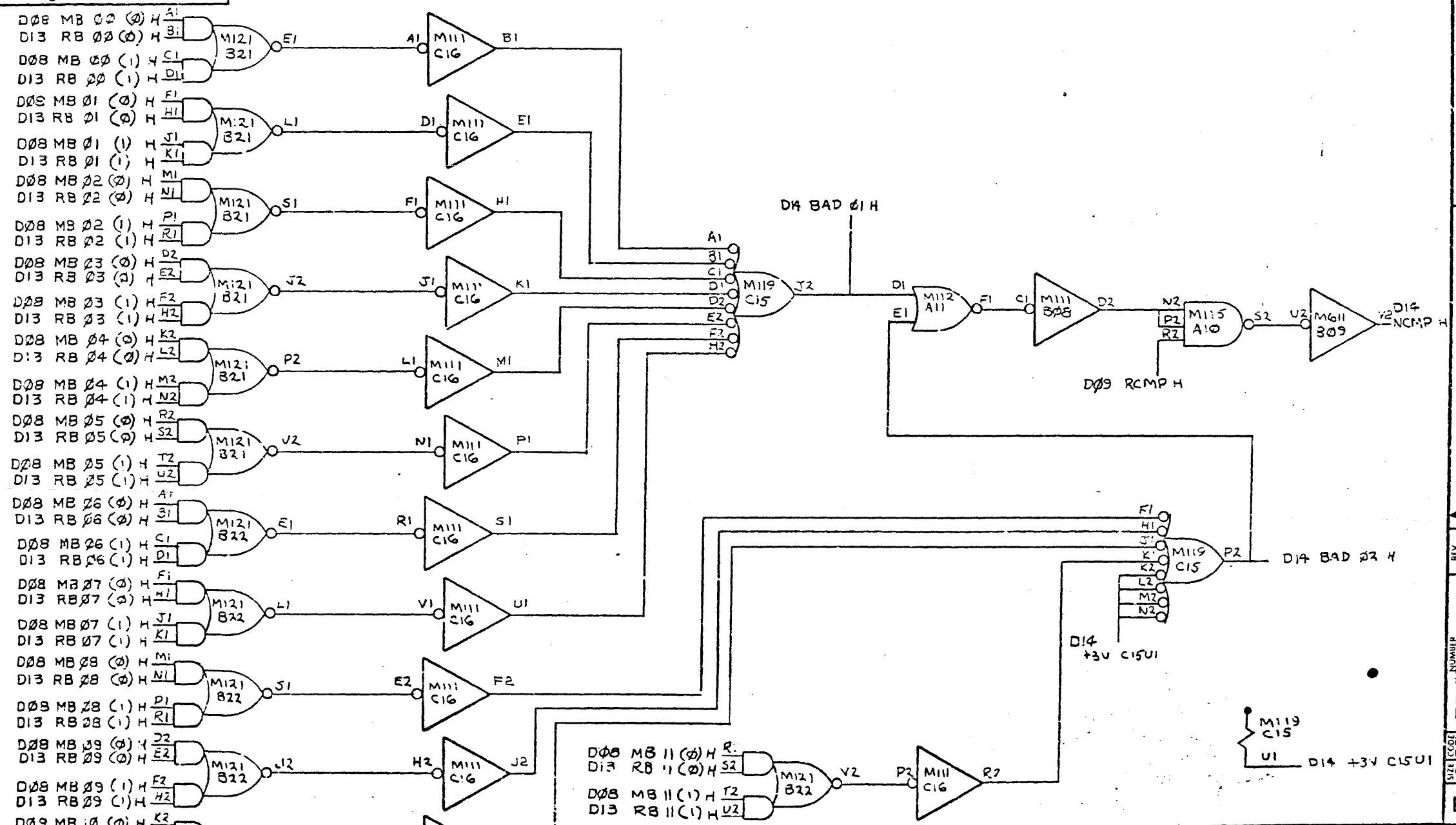

FIRST USED ON OPTION/MODEL	QTY.	DESCRIPTION	PART NO.	ITEM NO.
PDP-8/E		PARTS LIST		

UNLESS OTHERWISE SPECIFIED DIMENSION IN INCHES

TOLERANCES

DECIMALS	ANGLES
.xxx = .005	.0° 30'
.xx = .02	
.x = .1	

REMOVE BURRS AND BREAK SHARP CORNERS SURFACE QUALITY √

MATERIAL — SS

FINISH — SS

		DATE
DRN.	D. Mulcahey	6-9-76
CHK'D.		
ENG.		
PROJ. ENG.		
PROD.		

NEXT HIGHER ASSY. B-DD-TR07-A

SCALE — SS

SHEET 1 OF

digital EQUIPMENT CORPORATION MAYNARD MASSACHUSETTS

TITLE COMPARE

SIZE	CODE	NUMBER	REV.
C	BS	TR07-A -14	

DIST

REVISIONS: REV | CHANGE NO. | CHK

DEC FORM NO. DNC 11

"THIS DRAWING AND SPECIFICATIONS HEREIN ARE THE PROPERTY OF DIGITAL EQUIPMENT CORPORATION AND SHALL NOT BE REPRODUCED OR COPIED OR USED IN WHOLE OR IN PART AS THE BASIS FOR THE MANUFACTURE OR SALE OF ITEMS WITHOUT WRITTEN PERMISSION
COPYRIGHT © 1970, DIGITAL EQUIPMENT CORPORATION"

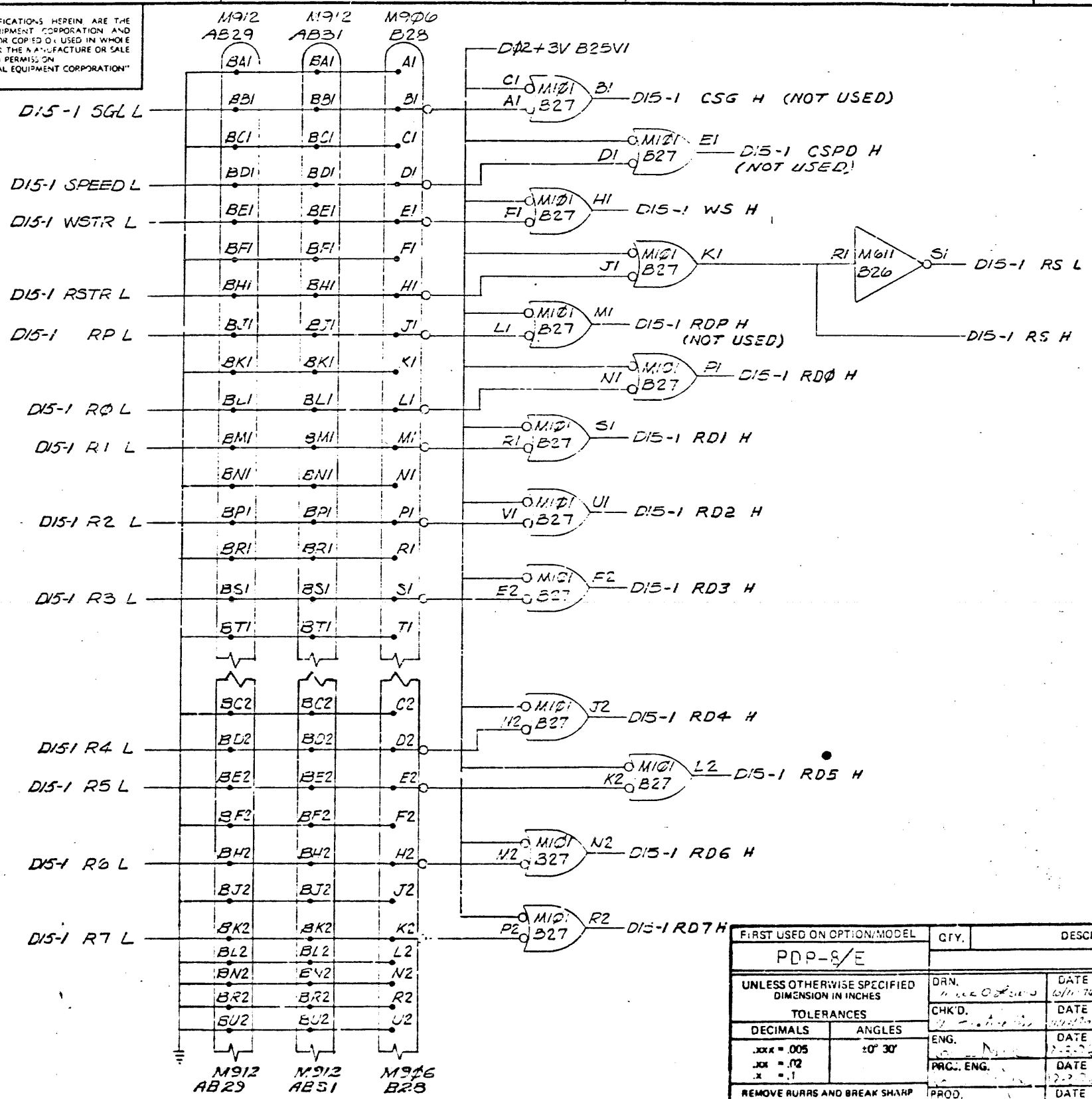

FIRST USED ON OPTION/MODEL	QTY.	DESCRIPTION	PART NO.	ITEM NO.
PDP-8/E		PARTS LIST		

UNLESS OTHERWISE SPECIFIED DIMENSION IN INCHES

TOLERANCES

DECIMALS	ANGLES
.xxx = .005	±0° 30'
.xx = .02	
.x = .1	

REMOVE BURRS AND BREAK SHARP CORNERS SURFACE QUALITY ✓

MATERIAL

FINISH

		DATE
DRN.	[illegible]	6/11/70
CHK'D.	[illegible]	[illegible]
ENG.	[illegible]	[illegible]
PROJ. ENG.	[illegible]	[illegible]
PROD.	[illegible]	12-3-70

digital EQUIPMENT CORPORATION MAYNARD MASSACHUSETTS

TITLE FROM FORM

NEXT HIGHER ASSY. B-CD-TR07-A

SCALE —/A—

SHEET 1 OF 2

SIZE C CODE BC NUMBER TR07-A-15 REV.

DIST

REVISIONS: REV | CHANGE NO. | CHK

DEC FORM NO DRC 111

"THIS DRAWING AND SPECIFICATIONS HEREIN ARE THE PROPERTY OF DIGITAL EQUIPMENT CORPORATION AND SHALL NOT BE REPRODUCED OR COPIED OR USED IN WHOLE OR IN PART AS THE BASIS FOR THE MANUFACTURE OR SALE OF ITEMS WITHOUT WRITTEN PERMISSION
COPYRIGHT © 1969, DIGITAL EQUIPMENT CORPORATION"

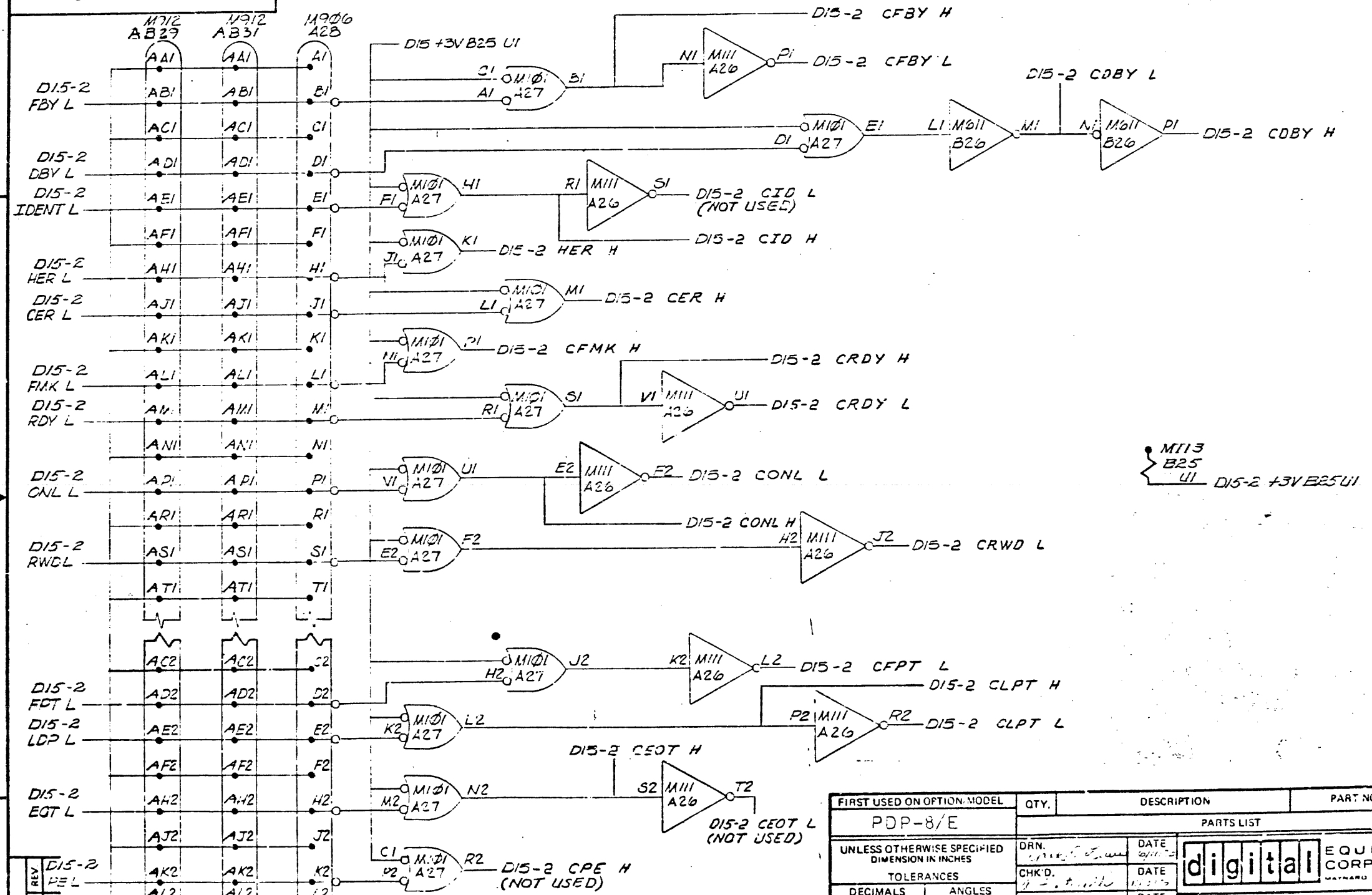

FIRST USED ON OPTION/MODEL	QTY.	DESCRIPTION	PART NO.	ITEM NO.
PDP-8/E		PARTS LIST		

UNLESS OTHERWISE SPECIFIED DIMENSION IN INCHES
TOLERANCES

DECIMALS	ANGLES
.xxx = .005 .xx = .02 .x = .1	±0° 30'

REMOVE BURRS AND BREAK SHARP CORNERS SURFACE QUALITY

MATERIAL

FINISH

DRN.	DATE	
CHK'D.	DATE	
ENG.	DATE	
PROJ ENG.	DATE	
PROD.	DATE	

digital EQUIPMENT CORPORATION MAYNARD MASSACHUSETTS

TITLE FRCM FCRM

NEXT HIGHER ASSY. B-DC-TR27-

SCALE

SHEET 2 OF

SIZE C CODE 2 NUMBER TP27-A-15 REV.

DIST

REVISIONS: REV. | CHANGE NO | CHK

DEC FORM NO. DNC 111

"THIS DRAWING AND SPECIFICATIONS, HEREIN, ARE THE PROPERTY OF DIGITAL EQUIPMENT CORPORATION AND SHALL NOT BE REPRODUCED OR COPIED OR USED IN WHOLE OR IN PART AS THE BASIS FOR THE MANUFACTURE OR SALE OF ITEMS WITHOUT WRITTEN PERMISSION. COPYRIGHT © 1976, DIGITAL EQUIPMENT CORPORATION"

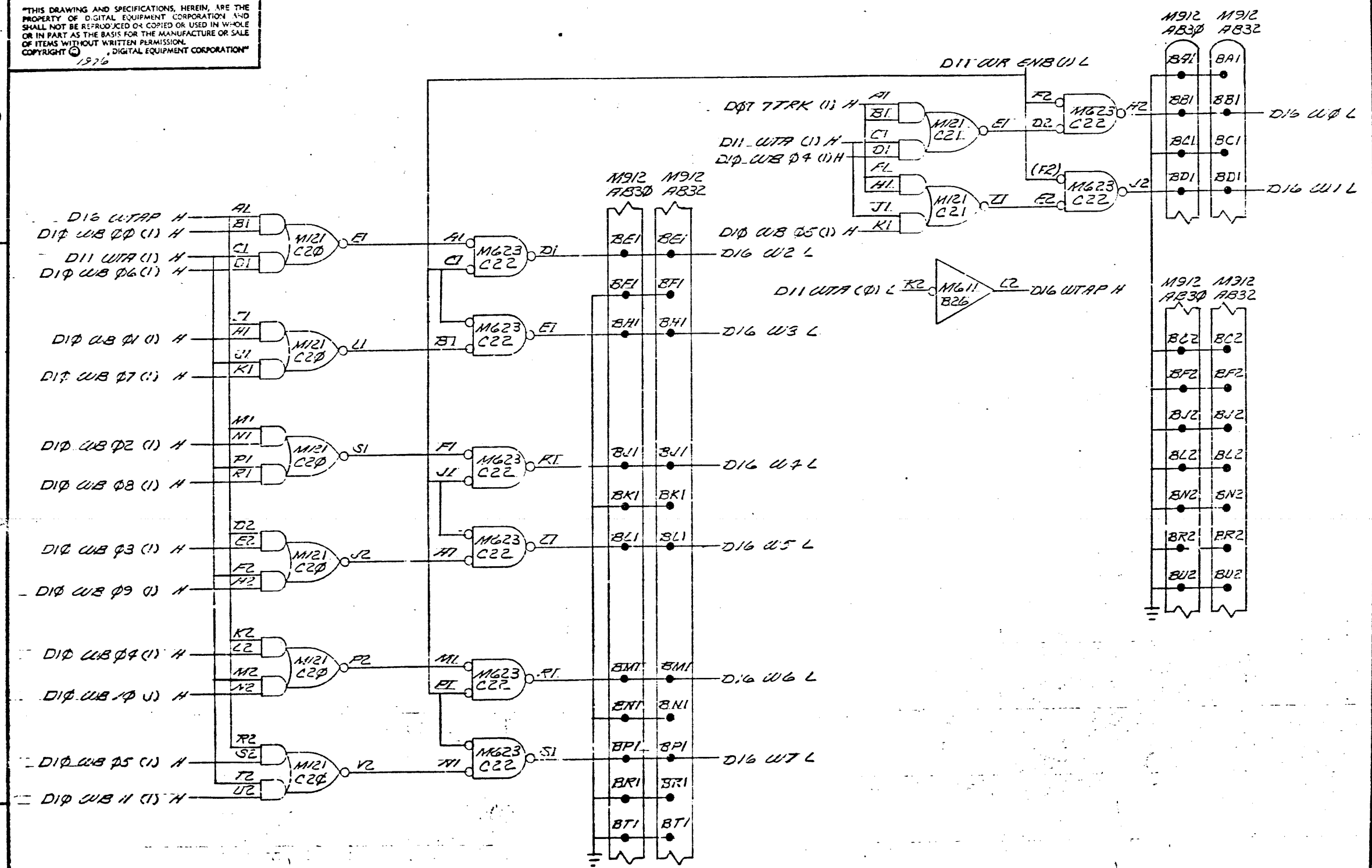

DRN.	6-7-76	FIRST USED ON PDP 8/E	digital
CHK'D		TITLE WRITE MUX	
ENG.			
PROJ. ENG.			
PROD.			
NEXT HIGHER ASSY. B-DC-TRØ7-A		SIZE C	CODE BS	NUMBER TRØ7-A-16	REV.
SCALE			
SHEET 1 OF 1		DIST.	

REVISIONS: REV. | CHANGE NO. | CHK

SIZE C CODE BS NUMBER TRØ7-A-16 REV.

"THIS DRAWING AND SPECIFICATIONS, HEREIN, ARE THE PROPERTY OF DIGITAL EQUIPMENT CORPORATION AND SHALL NOT BE REPRODUCED OR COPIED OR USED IN WHOLE OR IN PART AS THE BASIS FOR THE MANUFACTURE OR SALE OF ITEMS WITHOUT WRITTEN PERMISSION.
COPYRIGHT © 1975 , DIGITAL EQUIPMENT CORPORATION"

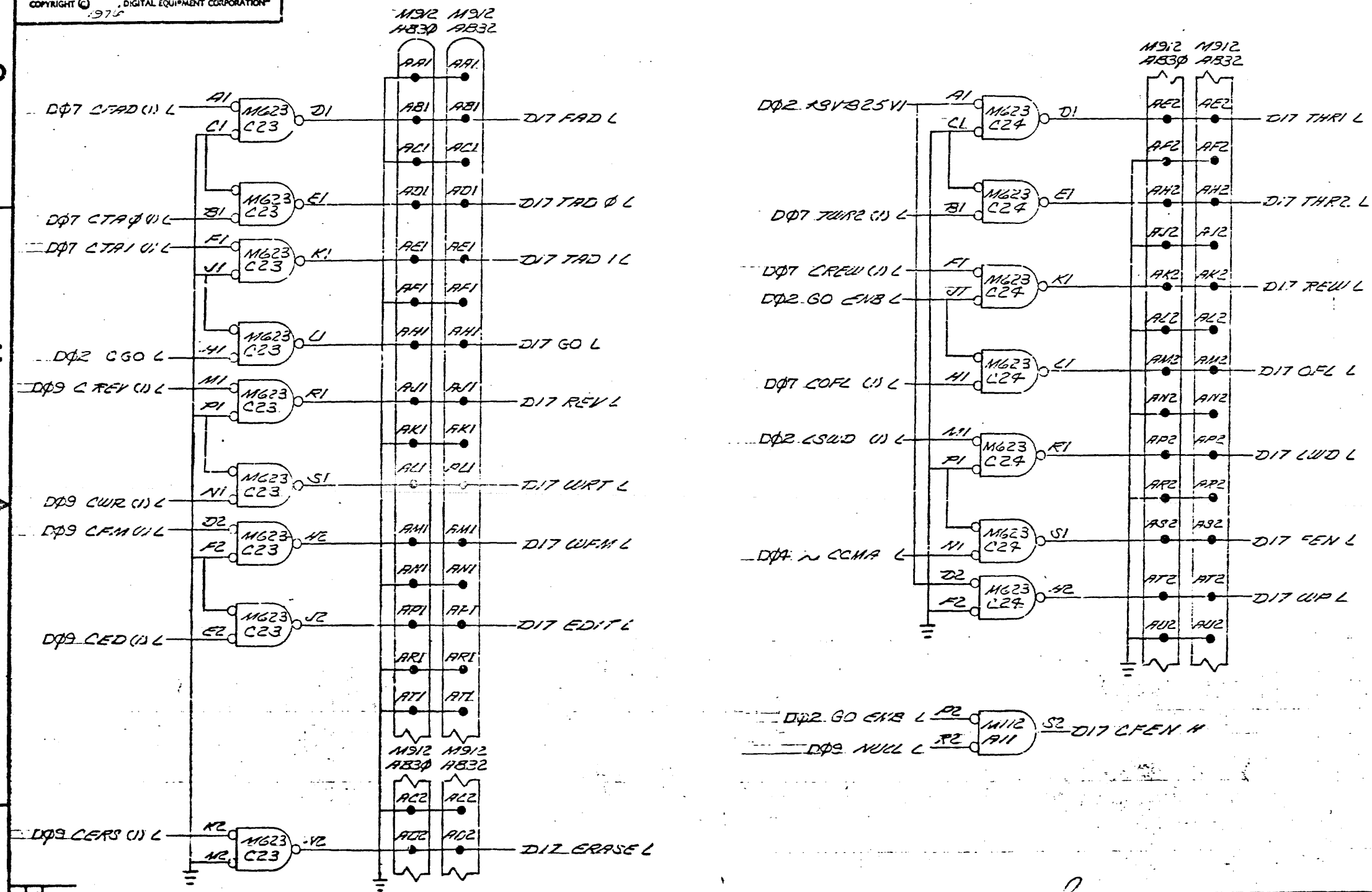

DBN		FIRST USED ON	PDP 8/E
CHK'D		TITLE	TO FORM
ENG.			
PROJ. ENG.			
PROD.			
NEXT HIGHER ASSY.			
E-DC-TRØ7-A		SIZE C	CODE B3
SCALE		NUMBER TRØ7-A -17	REV.
SHEET	OF	DIST.	

digital

REVISIONS: REV. / CHANGE NO. / CHK

REV. / NUMBER TRØ7-A -17 / SIZE C / CODE B3

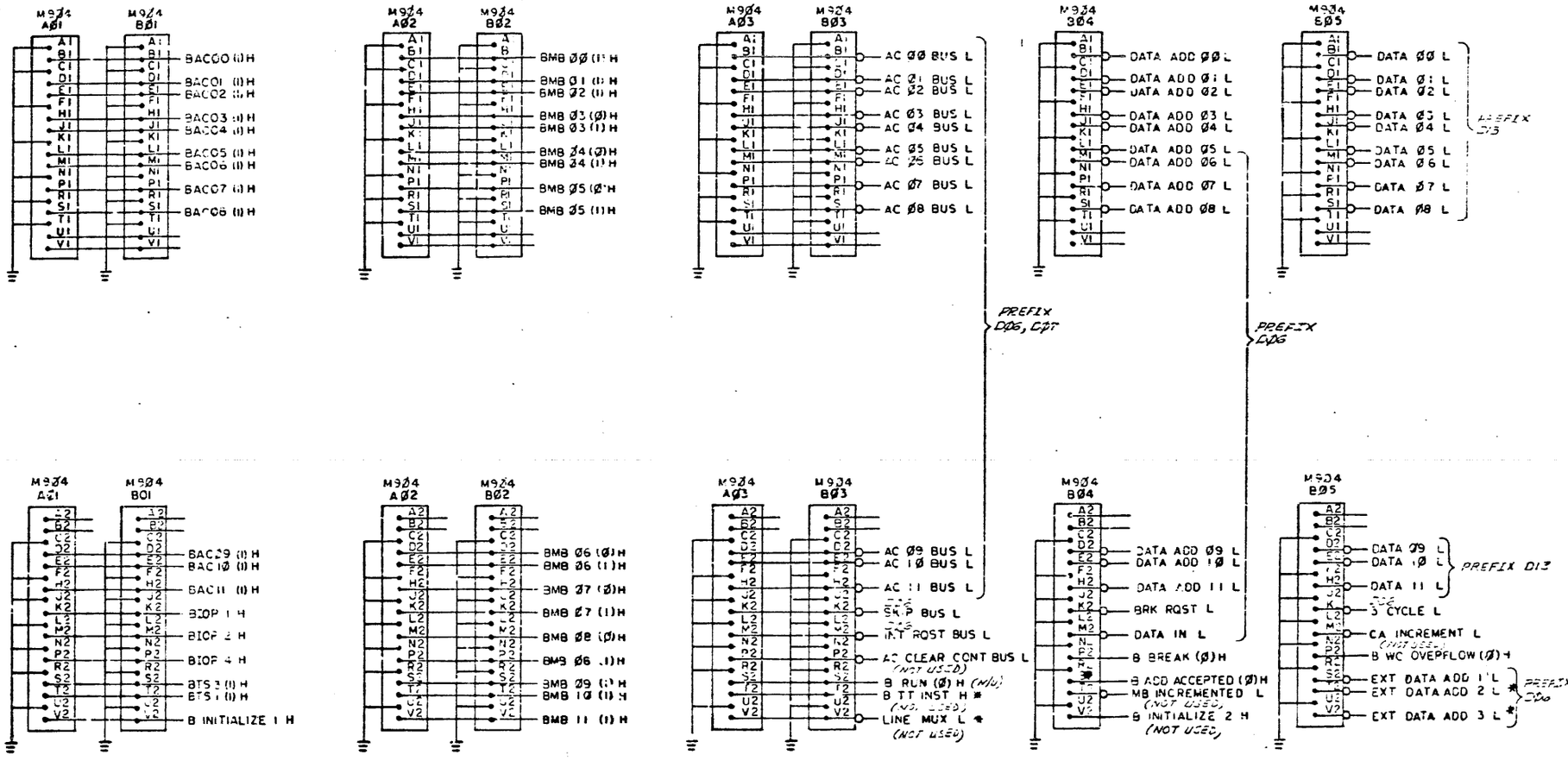

NOTES:

1. SIGNALS MARKED WITH AN ASTERISK ARE NOT USED IN PDP 8/L BUT RESERVED FOR SPECIFIC USE IN OTHER PDP8 PROCESSORS.

3. ALL UNMARKED SIGNAL NAMES PREFIXED WITH DIB.

FIRST USED ON OPTION MODEL	QTY	DESCRIPTION	PART NO	ITEM NO
PDP8/E		PARTS LIST		

UNLESS OTHERWISE SPECIFIED DIMENSION IN INCHES TOLERANCES
DECIMALS XXX = .005 XX = .03 X = .1
ANGLES ±0° 30'
REMOVE BURRS AND BREAK SHARP CORNERS SURFACE QUALITY
MATERIAL
FINISH

DRAWN | DATE | CHKD | DATE | ENG | DATE | PROJ ENG | DATE | PROD | DATE

DIGITAL EQUIPMENT CORPORATION MAYNARD, MASSACHUSETTS

TITLE: I/O CONNECTORS POSITIVE BUS

NEXT HIGHER ASSY: B-CUTX07-A
SCALE
SHEET OF

SIZE CODE: D | NUMBER: DIC TR07-A-18 | REV

MY-SERIES | REV | CHANGE NO | ONE

DEC FORM NO DRD 1 94

THIS SCHEMATIC IS FURNISHED ONLY FOR TEST AND MAINTENANCE PURPOSES. THE CIRCUITS ARE PROPRIETARY IN NATURE AND SHOULD BE TREATED ACCORDINGLY.
COPYRIGHT 1967 BY DIGITAL EQUIPMENT CORPORATION

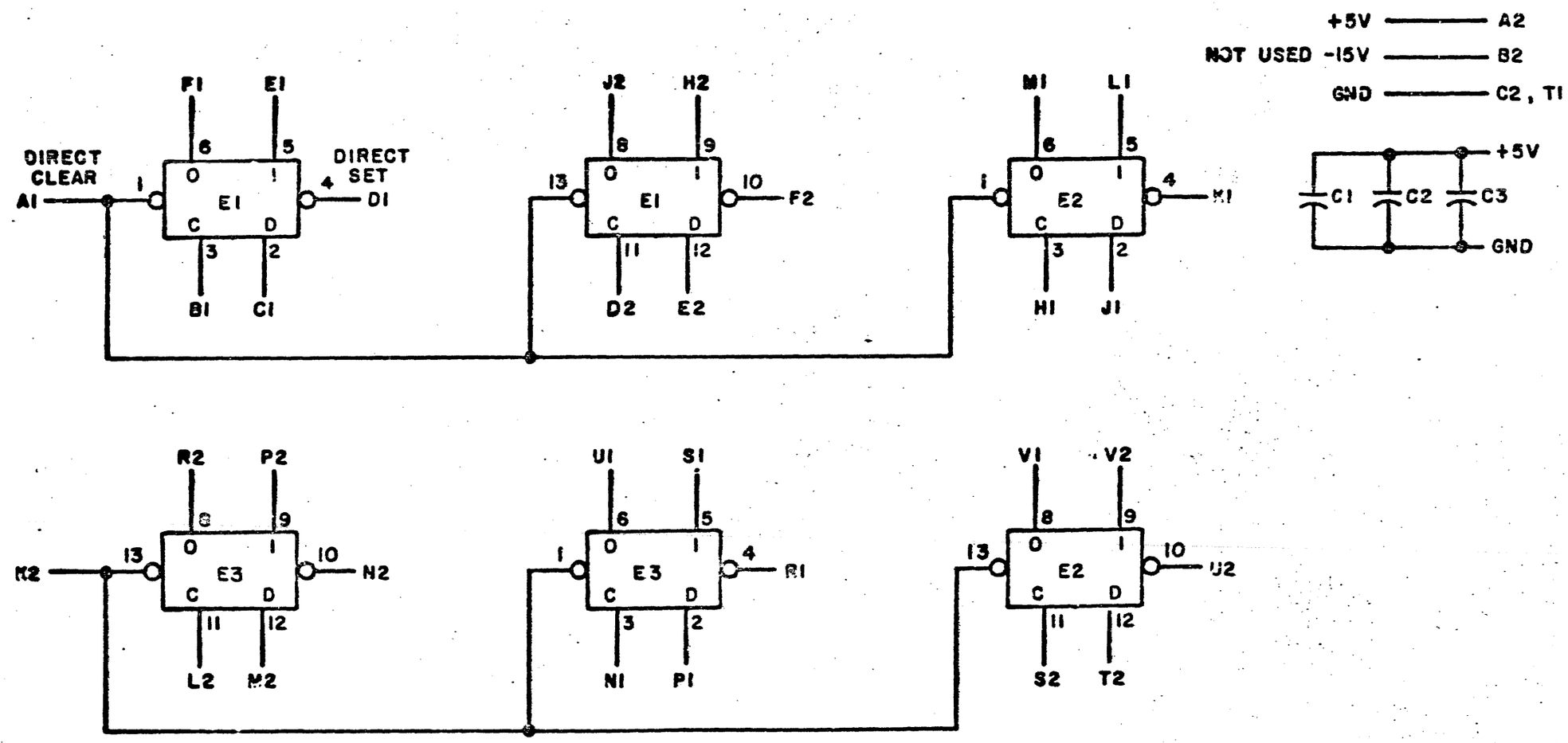

NOTES:
PIN 7 ON EACH IC = GND
PIN 14 ON EACH IC = +5V

REFERENCE DESIGNATION	DESCRIPTION	PART NO.
E1 THRU E3	INTEGRATED CKT. DEC7474N	1905547
C1 THRU C3	CAP. .01 MFD 100V 20% DISC	1001610
	PARTS LIST	A-PL-M216-0-0

PARTS LIST

REVISIONS		
REV	A	B
CHG NO	6806	00001
CHK		

DRN. D. Fuller DATE
CHK'D DATE
PROD. DATE

TRANSISTOR & DIODE CONVERSION CHART

DEC	EIA	DEC	EIA

EQUIPMENT CORPORATION
MAYNARD, MASSACHUSETTS

TITLE SIX FLIP-FLOPS M216

SIZE	CODE	NUMBER	REV.
B	CS	M216-0-1	B

PRINTED CIRCUIT REV. C

DEC FORM NO. DRB 102

PINK DIST. 324 434 435

SIZE B CODE CS NUMBER M216-0-1 REV. B

SIZE	CODE	NUMBER	REV.
B	CS	M921-0-1	

THIS SCHEMATIC IS FURNISHED ONLY FOR TEST AND MAINTENANCE PURPOSES. THE CIRCUITS ARE PROPRIETARY IN NATURE AND SHOULD BE TREATED ACCORDINGLY.
COPYRIGHT 1969 BY DIGITAL EQUIPMENT CORPORATION

PIN SIGNAL ASSIGNMENTS

OUT			
DEVICE A	DEVICE B	DEVICE C	SIGNAL
AI	BI	CI	MB3
DI	EI	FI	MB4
HI	JI	KI	MB5
LI	MI	NI	MB6
PI	RI	SI	MB7
UI	VI	T2	MB8

IN	
D2	MB3(0)
E2	MB3(1)
F2	MB4(0)
H2	MB4(1)
J2	MB5(0)
K2	MB5(1)
L2	MB6(0)
M2	MB6(1)
N2	MB7(0)
P2	MB7(1)
R2	MB8(0)
S2	MB8(1)

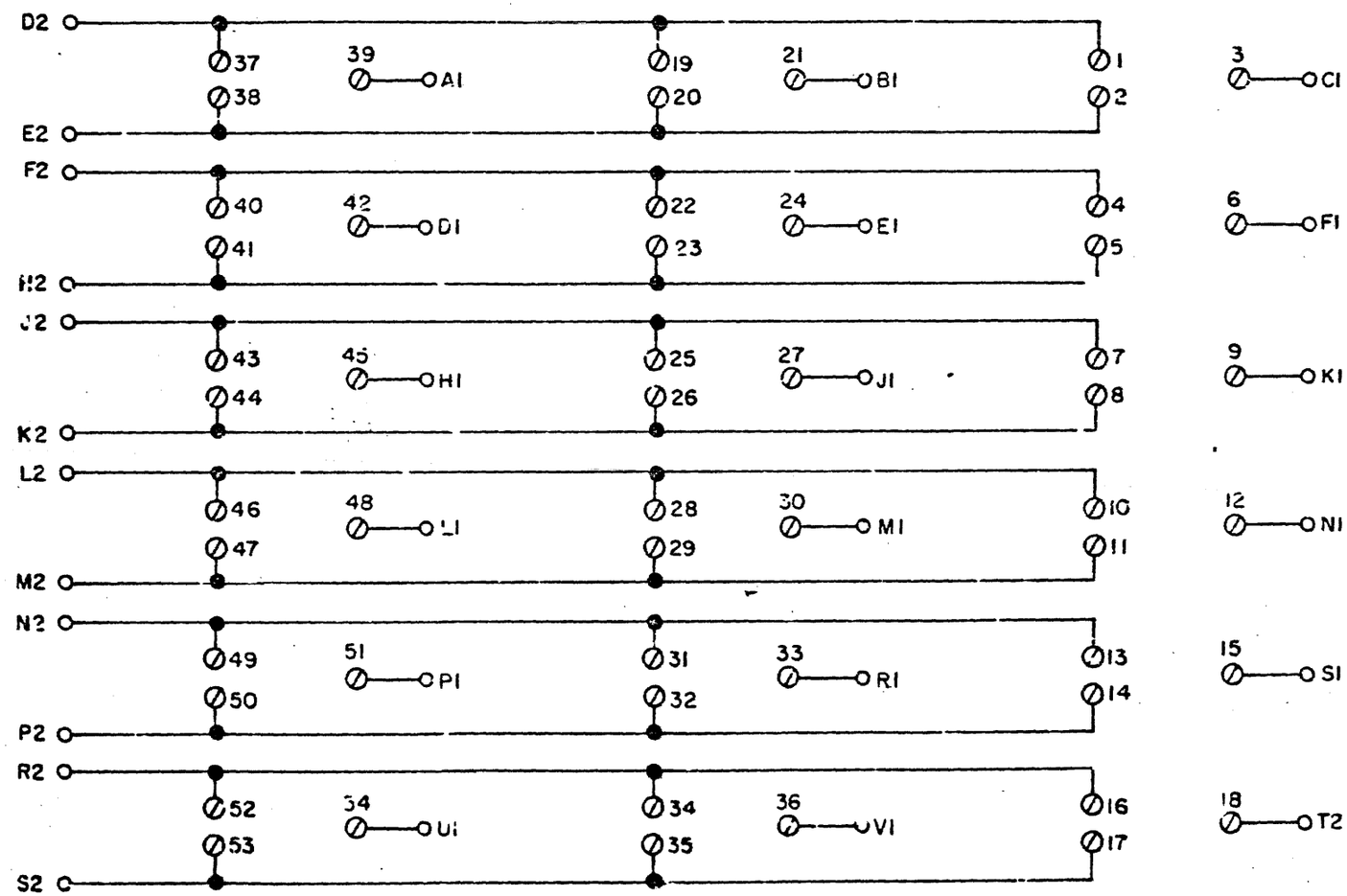

UNLESS OTHERWISE INDICATED:
⊘ ARE SPLIT LUGS

REVISIONS		
REV	CHG NO	CHK

DRN	SUTLER	DATE
CHK'D		DATE
ENG		DATE
PROD.		DATE

TRANSISTOR & DIODE CONVERSION CHART

DEC	EIA	DEC	EIA

EQUIPMENT CORPORATION
MAYNARD, MASSACHUSETTS

TITLE DEVICE CODE SELECT JUMPER BOARD

SIZE	CODE	NUMBER	REV
B	CS	M921-0-1	

PRINTED CIRCUIT REV B

DEC FORM NO.
DRP 102

DIST: 1-41-3-14-23-3

PINK

"THE MATERIAL HEREIN IS FOR INFORMATION PURPOSES ONLY AND IS SUBJECT TO CHANGE WITHOUT NOTICE. DIGITAL EQUIPMENT CORPORATION ASSUMES NO RESPONSIBILITY FOR ANY ERRORS WHICH MAY APPEAR HEREIN."

DRAWING DIRECTORY

"THIS DRAWING AND SPECIFICATIONS, HEREIN, ARE THE PROPERTY OF DIGITAL EQUIPMENT CORPORATION AND SHALL NOT BE REPRODUCED OR COPIED OR USED IN WHOLE OR IN PART AS THE BASIS FOR THE MANUFACTURE OR SALE OF ITEMS WITHOUT WRITTEN PERMISSION. COPYRIGHT © 1976 , DIGITAL EQUIPMENT CORPORATION"

UNIT VARIATIONS

VAR	TITLE
TRØ7-A	PEC FORMATTER INTERFACE

REVISIONS

REV	CHG. NO.	DATE

USED ON OPTION/MODEL	
PDP-8/E	

SHEET 1 OF 2

DRN.		DATE 9/15/76
CHK'D.		DATE 9/15/76
PROJ ENG.		DATE
PROD.		DATE 12-3-76
FIELD SERV.		DATE

TITLE

PEC FORMATTER INTERFACE

digital

SIZE	CODE	NUMBER	REV
B	DD	TRØ7-A	

DIST

DRB 106A

FIND NO.	DRAWING NO.	DESCRIPTION	TYPE
1	MPØØ176	FIELD MAINTENANCE PRINT SET (MP)	-
	B-TC-TRØ7-A —2Ø	FIELD MAINTENANCE PRINT SET (TC)	-
2	D-UA-TRØ7-A —Ø	PEC FORMATTER INTERFACE	E/M
	C-IA-5405680-Ø-Ø	LEFT END PANEL ASSY	M
	C-MD-5302536-Ø-Ø	RIGHT END PANEL ASSY	M
	D-UA-BCØ8J-Ø-Ø	CABLE (BCØ8J)	E/M
3	D-AD-7013090-Ø-Ø	WIRED ASSY	E
	A-WT-7013090-Ø	PEC FORMATTER INTERFACE AWT REVISION STATUS	E
	D-AD-5404491-Ø-Ø	H911 MTG PANEL	M
	A-DC-7406371-Ø-Ø	LOGIC FRAME DECALS	E/M
	A-DC-7411881-Ø-Ø	DECAL LOGIC ASSY REV	E/M
	D-AD-5302483-Ø-Ø	1943 CASTING PLUS PINS	M
	E-SC-1205348-Ø-Ø	288 PIN BLOCK TYPE H803	M
	K-WL-TRØ7-A —19	WIRE LIST (PEC FORMATTER INTERFACE)	E
4	B-MU-TRØ7-A —Ø1	MODULE UTILIZATION	E
	A-PL-TRØ7-A —Ø1	MODULE UTILIZATION (PL)	E
5	C-BS-TRØ7-A —Ø2	FORMAT CONTROL	E
	C-BS-TRØ7-A —Ø3	INDICATOR DRIVERS	E
	C-BS-TRØ7-A —Ø4	8 CONTROL	E
	C-BS-TRØ7-A —Ø5	FROM 8	E
	C-BS-TRØ7-A —Ø6	TO 8	E
	C-BS-TRØ7-A —Ø7	COMMAND REG.	E
	C-BS-TRØ7-A —Ø8	MEMORY BUFFER	E
	C-BS-TRØ7-A —Ø9	FORMAT CONTROL	E
	C-BS-TRØ7-A —1Ø	WRITE BUFFER	E
	C-BS-TRØ7-A —11	WRITE CONTROL	E
	C-BS-TRØ7-A —12	READ CONTROL	E
	C-BS-TRØ7-A —13	READ BUFFER	E
	C-BS-TRØ7-A —14	COMPARE	E
	C-BS-TRØ7-A —15	FROM FORM	E
	C-BS-TRØ7-A —16	WRITE MUX	E
	C-BS-TRØ7-A —17	TO FORM	E
	D-IC-TRØ7-A —18	I/O CONNECTORS POSITIVE BUS	E
6	B-CS-M216-Ø-1	SIX FLIP FLOPS	E
	B-CS-M921-Ø-1	DEVICE CODE SELECT JUMPER BOARD	E

TYPE: E ELECTRICAL
M MECHANICAL
E/M ELECTRO/MECHANICAL

digital

TITLE		SIZE	CODE	NUMBER	REV
PEC FORMATTER INTERFACE	SHEET 2 OF 2	B	DD	TRØ7-A	

DRB 109A

EN-01062-2C-16-MAY-1981