THIS SCHEMATIC IS FURNISHED ONLY FOR TEST AND MAINTENANCE PURPOSES. THE CIRCUITS ARE PROPRIETARY IN NATURE AND SHOULD BE TREATED ACCORDINGLY.
COPYRIGHT 1966 BY DIGITAL EQUIPMENT CORPORATION

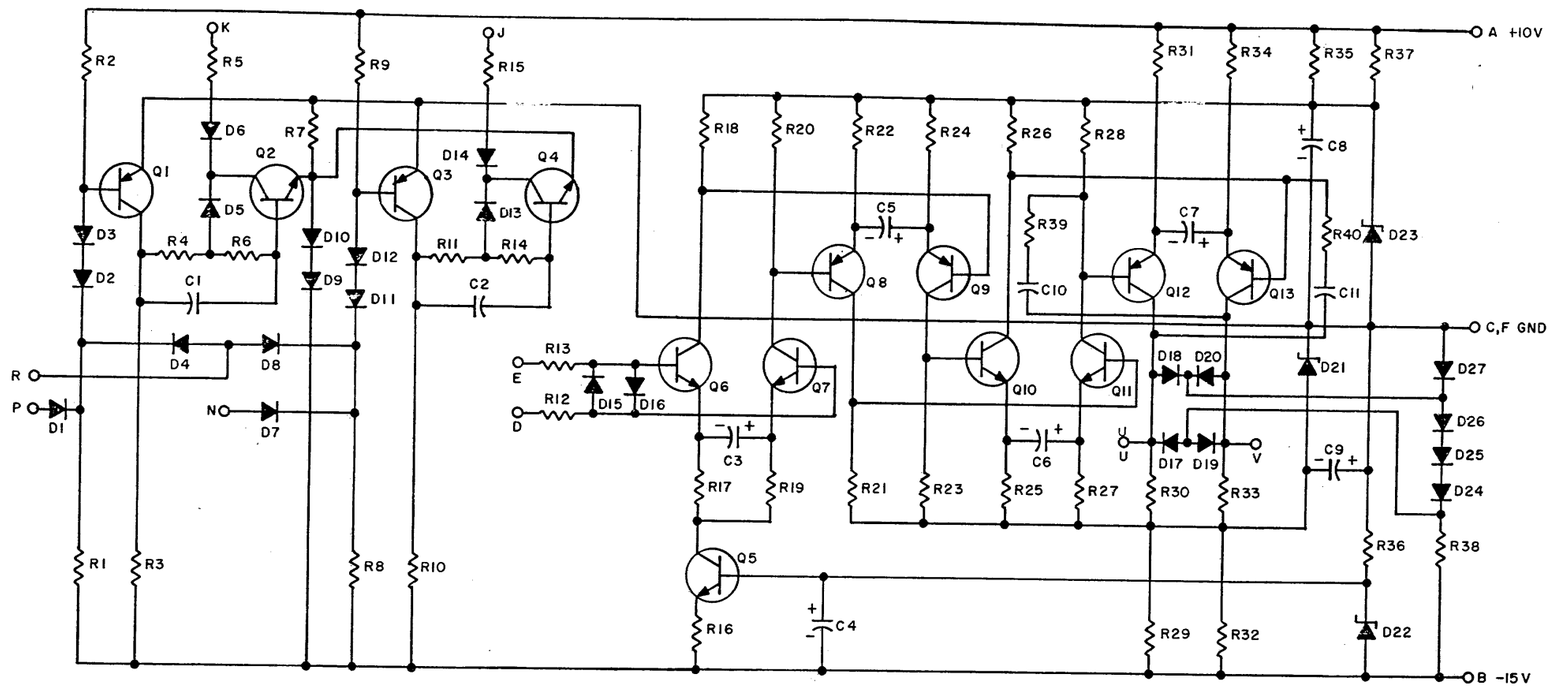

REFERENCE DESIGNATION	DESCRIPTION	PART NO.
Q8, Q9, Q12, Q13	TRANSISTOR DEC3638B	1502979
Q6, Q7, Q10, Q11	TRANSISTOR DEC3009B-S	1503100
Q5	TRANSISTOR DEC3009A-S	1501999
Q2, Q4	TRANSISTOR DEC2219A	1501881
Q1, Q3	TRANSISTOR DEC2894-3B-S	1503099
R39, R40	RES. 120 1/4W 5% CC	1300247
R36, R38	RES. 470 1/2W 10% CC	1300318
R30, R33 R17 THRU R21, R23, R25 THRU R28,	RES. 3K 1/4W 5% CC	1300432
R12, R13	RES. 220 1/4W 5% CC	1300271
R6, R14, R35, R37	RES. 560 1/4W 5% CC	1301890
R5, R15	RES. 68 2W 5% CC	1302308
R4, R11	RES. 750 1/4W 5% CC	1301401
R3, R7, R10, R16, R22, R24, R29, R31, R32, R34	RES. 1.5K 1/4W 5% CC	1300391
R2, R9	RES. 100K 1/4W 5% CC	1302466
R1, R8	RES. 7.5K 1/4W 5% CC	1301422
D23	DIODE 1/4M 6.8AZ	1100102
D22	DIODE IN748 3.9V	1100121
D21	DIODE IN756A 8.2V	1103441
D5, D6, D13, D14	DIODE D670	1102162
D2, D3, D11, D12, D24 THRU D27	DIODE D662	1100113
D1, D4, D7 THRU 10, D15 THRU D20	DIODE D664	1100114
C10, C11	CAP. 1,200 MMF 100V 5% D.M.	1002424
C5	CAP. 2.2 MFD 20V 10%	1002627
C4, C6, C7, C8, C9	CAP. 3.9 MFD 10V 10% S.TANT	1000064
C3	CAP. .47 MFD 35V 10% S.TANT	1005965
C1, C2	CAP. 680 MMF 100V 5% D.M.	1000026
	PARTS LIST	A-PL-G882-0-0

PARTS LIST

TRANSISTOR & DIODE CONVERSION CHART

DEC	EIA	DEC	EIA
DEC3638B	2N3638	D662	IN645
DEC3009B, A	2N3009	D664	IN3606
1/4M 6.8AZ	IN4099	D670	IN3653
DEC2219A	2N2219	IN756A	SAME
DEC2894-3B	NONE	IN748	SAME

REVISIONS		
CHK	CHG NO.	REV.
RMS	6698	3
REV & REDR.	6838	D
	00001	E

DRN. A.OUELLETTE	DATE 2-8-66	
CHK'D R. SILVERMAN	DATE 2-9-66	
ENG. R. SOGGE	DATE 2-9-66	
PROD.	DATE	

digital EQUIPMENT CORPORATION MAYNARD, MASSACHUSETTS

TITLE MANCHESTER READER WRITER G882

SIZE	CODE	NUMBER	REV.
C	CS	G882-0-1	E

PRINTED CIRCUIT REV. B

REV. E
NUMBER G882-0-1
SIZE C CODE CS

DEC FORM NO. DRC 102