SIZE	CODE	NUMBER	REV.
B	CS	M870-0-1	

THIS SCHEMATIC IS FURNISHED ONLY FOR TEST AND MAINTENANCE PURPOSES. THE CIRCUITS ARE PROPRIETARY IN NATURE AND SHOULD BE TREATED ACCORDINGLY. COPYRIGHT 1970 BY DIGITAL EQUIPMENT CORPORATION

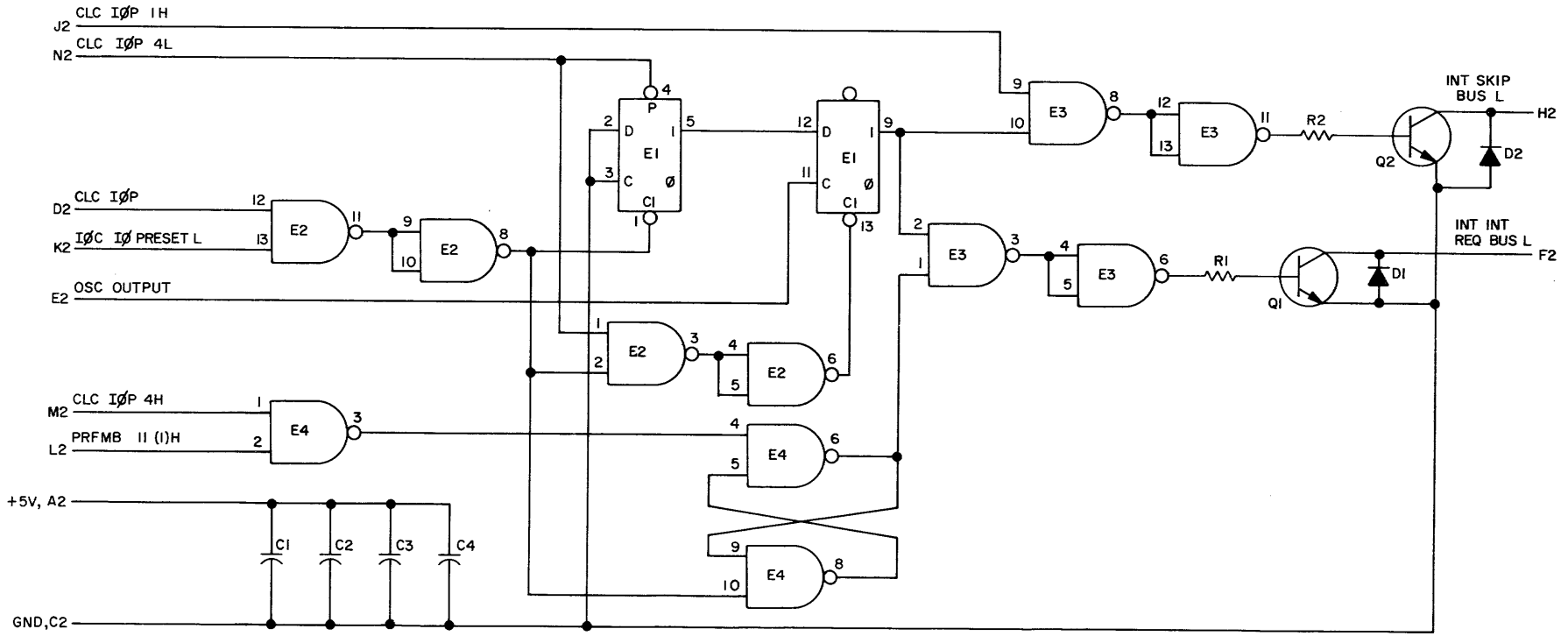

UNLESS OTHERWISE INDICATED:
RESISTORS ARE 390,1/4W,5%
CAPACITORS ARE .01MFD,100V,20%
TRANSISTORS ARE DEC3009B
DIODES ARE D664
E2,E3,E4 ARE DEC7400
E1 IS DEC7474
PIN 7 ON EACH IC = GND
PIN 14 ON EACH IC = +5V

REVISIONS		
REV.		
CHG NO.		
CHK		

DRN.	BUTLER	DATE	1-19-70
CHK'D		DATE	3-13-70
ENG		DATE	5/28/70
PROD.		DATE	6/5/70

TRANSISTOR & DIODE CONVERSION CHART

DEC	EIA	DFC	EIA
D664	IN3606		
DEC3009B-S	2N3009B		

digital EQUIPMENT CORPORATION
MAYNARD, MASSACHUSETTS

TITLE: SIMPLE CLOCK M870

SIZE	CODE	NUMBER	REV.
B	CS	M870-0-1	

PRINTED CIRCUIT REV. A

DEC FORM NO. DRB 102

DIST. 324,434,435-3

5 PINK