Digital Equipment Corporation
Maynard, Massachusetts

digital

Maintenance Manual
Volume II

RK8 Disk System

RK8 DISK SYSTEM
MAINTENANCE MANUAL
VOLUME II

DIGITAL EQUIPMENT CORPORATION • MAYNARD, MASSACHUSETTS

1st Printing December 1970

Copyright © 1970 by Digital Equipment Corporation

The material in this manual is for information purposes and is subject to change without notice.

The following are trademarks of Digital Equipment Corporation, Maynard, Massachusetts:

DEC	PDP
FLIP CHIP	FOCAL
DIGITAL	COMPUTER LAB

CONTENTS

Figure Number	Description	Drawing Number
	RK01 Disk Drive	
Figure II-1	RK01 Basic Format Diagram	D-TD-RK01-X-12
Figure II-2	RK01 Block Diagram	D-BD-RK01-X-13
Figure II-3	RK01 Flow Diagram	D-FD-RK01-X-14
Figure II-4	RK01/RK08 Timing Diagram	D-TD-RK01-X-15
Figure II-5	Format Delays Block Schematic Diagram	D-BS-RK01-X-01
Figure II-6	Cable to RK08 Block Schematic Diagram	D-BS-RK01-X-09
Figure II-7	Track Seek Block Schematic Diagram	D-BS-RK01-X-02
Figure II-8	Disk and Track Address Block Schematic Diagram	D-BS-RK01-X-03
Figure II-9	Compare Track Address Block Schematic Diagram	D-BS-RK01-X-04
Figure II-10	Disk Selection Block Schematic Diagram	D-BS-RK01-X-05
Figure II-11	Disk Cables Block Schematic Diagram	D-BS-RK01-X-06
Figure II-12	+3V Loads Block Schematic Diagram	D-BS-RK01-X-07
Figure II-13	+3V Clamp Block Schematic Diagram	D-BS-RK01-X-08
	RK08 Disk Control	
Figure II-14	IOT Decoding Block Schematic Diagram	D-BS-RK08-0-05 Sheet 1 of 2
Figure II-15	IOT Decoding Block Schematic Diagram	D-BS-RK08-0-05 Sheet 2 of 2
Figure II-16	Skip and Break Block Schematic Diagram	D-BS-RK08-0-06
Figure II-17	Maintenance Register Block Schematic Diagram	D-BS-RK08-0-07
Figure II-18	Major Sequencer Register Block Schematic Diagram	D-BS-RK08-0-08
Figure II-19	R/W Command, Find Sector, End transfer Block Schematic Diagram	D-BS-RK08-0-09
Figure II-20	Read Block Schematic Diagram	D-BS-RK08-0-10
Figure II-21	Write Block Schematic Diagram	D-BS-RK08-0-11
Figure II-22	Data Buffer Block Schematic Diagram	D-BS-RK08-0-12
Figure II-23	Data Shift Register Block Schematic Diagram	D-BS-RK08-0-13
Figure II-24	Longitudinal Parity Block Schematic Diagram	D-BS-RK08-0-14 Sheet 1 of 2
Figure II-25	Longitudinal Parity Block Schematic Diagram	D-BS-RK08-0-14 Sheet 2 of 2

CONTENTS (Cont)

Figure Number	Description	Drawing Number
	RK08 Disk Control (Cont)	
Figure II-26	Status Register Block Schematic Diagram	D-BS-RK08-0-15
Figure II-27	Sector Addressing Block Schematic Diagram	D-BS-RK08-0-16 Sheet 1 of 2
Figure II-28	Sector Addressing Block Schematic Diagram	D-BS-RK08-0-16 Sheet 2 of 2
Figure II-29	Bit and Block Counter Block Schematic Diagram	D-BS-RK08-0-17
Figure II-30	Word Count (WC) Register Block Schematic Diagram	D-BS-RK08-0-18
Figure II-31	Current Address and EMA Register Block Schematic Diagram	D-BS-RK08-0-19
Figure II-32	AC Input Gating 00-05 Block Schematic Diagram	D-BS-RK08-0-20
Figure II-33	AC Input Gating 06-11 Block Schematic Diagram	D-BS-RK08-0-21
Figure II-34	AC Memory Buffer (MB) Inverters Block Schematic Diagram	D-BS-RK08-0-22
Figure II-35	+3V Clamps Block Schematic Diagram	D-BS-RK08-0-23
Figure II-36	Cable to RK01-X Block Schematic Diagram	D-BS-RK08-0-24
Figure II-37	I/O and Data Break Cables Block Schematic Diagram	D-BS-RK08-0-25
Figure II-38	Indicator Cables Block Schematic Diagram	D-BS-RK08-0-26
	Power Supply	
Figure II-39	Type 716 Power Supply Circuit Schematic Diagram	C-CS-716-0-1
Figure II-40	Type 854 Power Control Panel Wiring Diagram	B-CS-854-0-1
Figure II-41	Type 854 Power Control Panel Component Pin Location Diagram	D-UA-854-0-0
Figure II-42	Register Indicator Panel Circuit Schematic Diagram	D-CS-5408458-0-1
Figure II-43	Control Panel Switch Assembly Diagram	E-AD-7006672-0-0
Figure II-44	AC/DC Power Wiring Diagram	E-IC-RK01-0-2

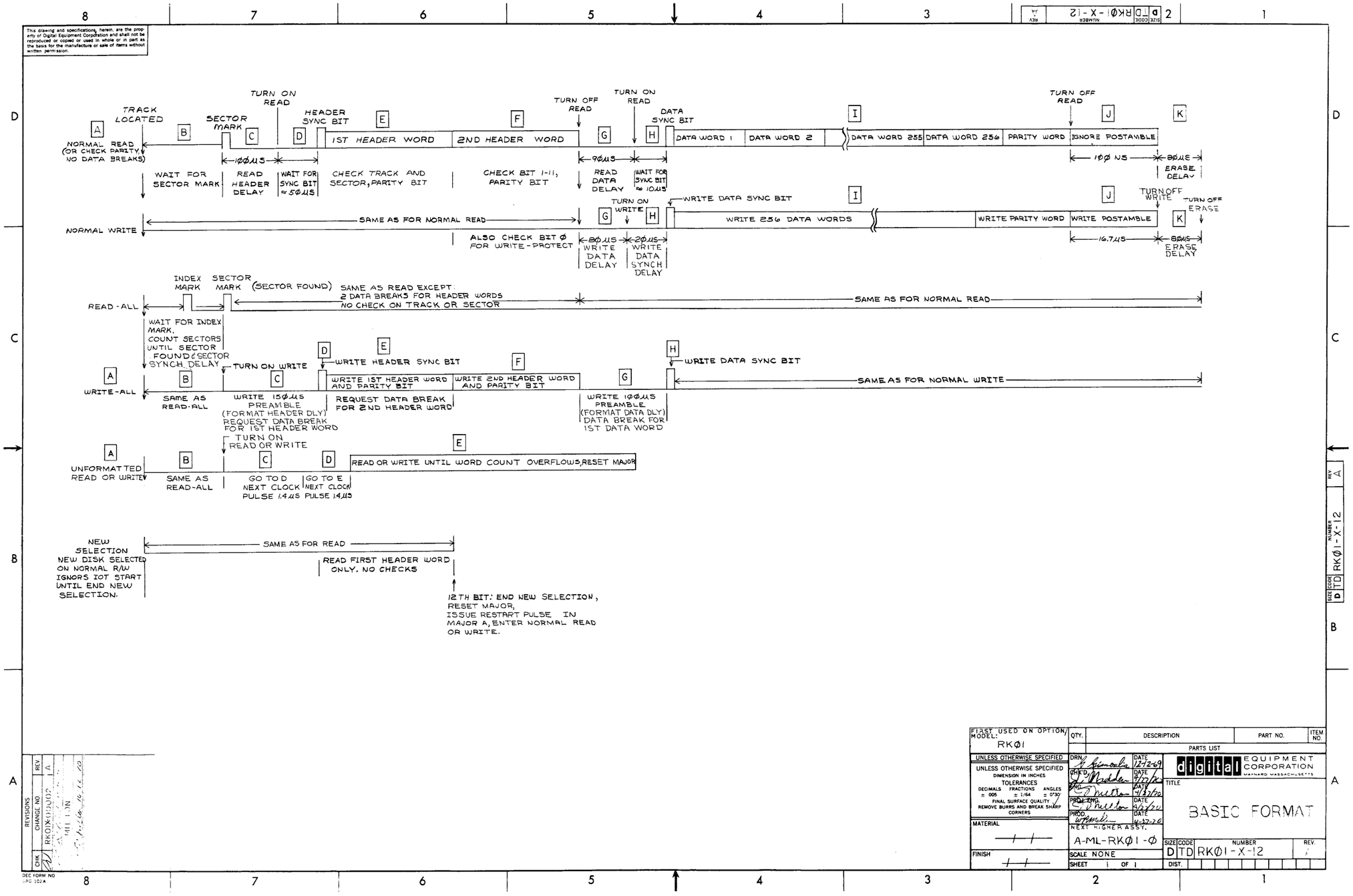

Figure II-1 RK01 Basic Format Diagram

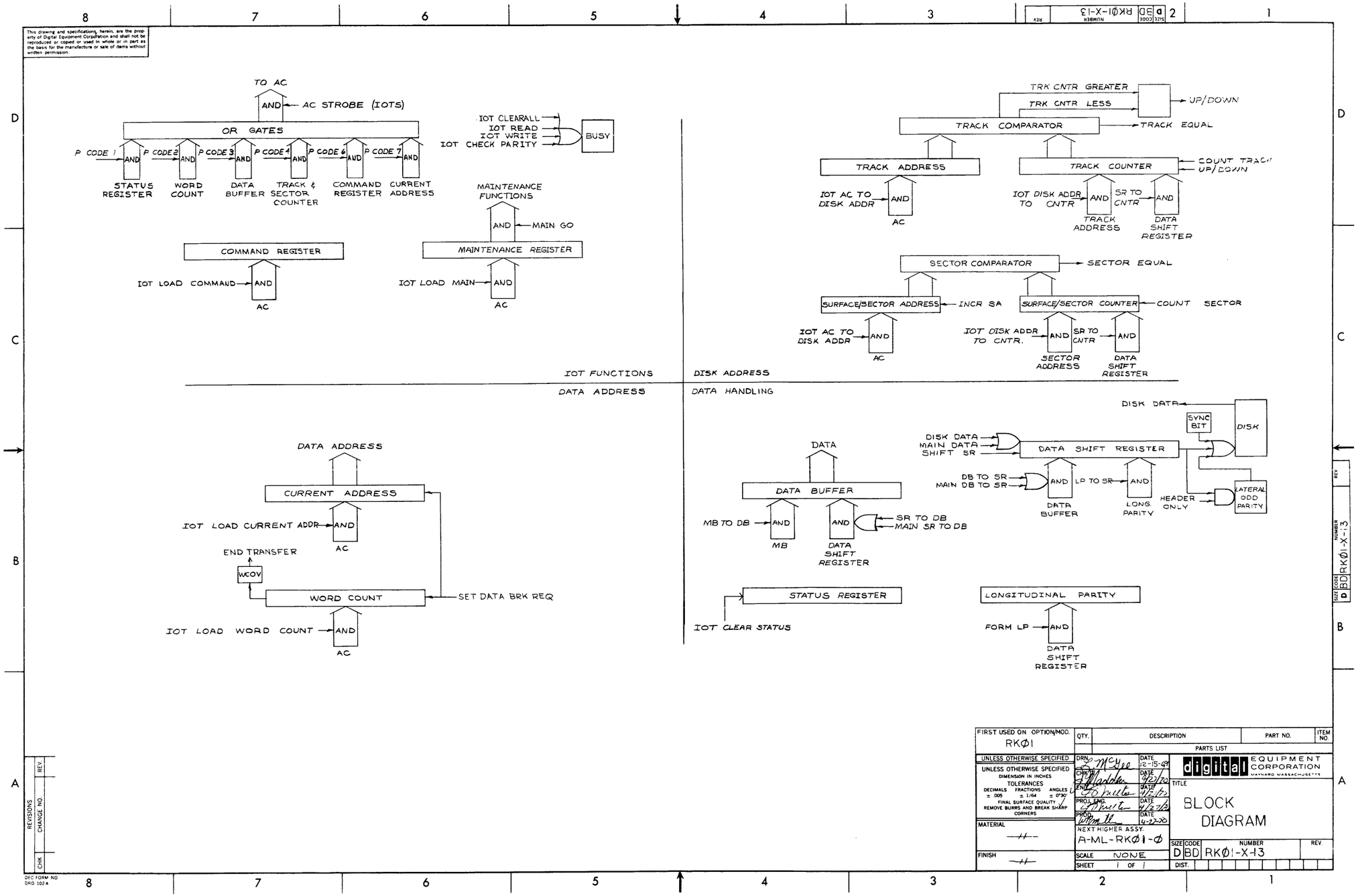

Figure II-2 RK01 Block Diagram

This drawing and specifications, herein, are the property of Digital Equipment Corpdation and shall not be reproduced or copied or used in whole or in part as the basis for the manufacture or sale of items without written permission.

MAJOR STATE	NORMAL READ	NORMAL WRITE	CHECK PARITY	READ ALL	WRITE ALL	UNFORMATED READ OR WRITE	MAJOR STATE
A	TRACK LOCATED WAIT FOR SETTLE DELAY OF 37 MILLISECONDS	SAME AS NORMAL READ	SAME AS NORMAL READ EXCEPT INHIBIT DATA BREAK REQUEST	SAME AS NORMAL READ	SAME AS NORMAL READ	SAME AS NORMAL READ	A
B	SECTOR MARK	SAME AS NORMAL READ		WAIT FOR INDEX MARK CLEAR SECTOR COUNTER COUNT SECTOR MARKS UNTIL SECTOR FOUND	SAME AS READ ALL	SAME AS READ ALL	B
C	WAIT FOR 100 MICROSECONDS	SAME AS NORMAL READ		SAME AS NORMAL READ	WRITE 150 MICROSECOND PREAMBLE DATA BREAK FOR FIRST HEADER WORD	SKIP THIS MAJOR STATE (1.4 US)	C
D	LOOK FOR HEADER SYNC BIT	SAME AS NORMAL READ		SAME AS NORMAL READ	WRITE SYNC BIT DATA BUFFER→ SERIAL REGISTER DATA BREAK FOR SECOND HEADER WORD	SKIP THIS MAJOR STATE (1.4 US)	D
E	READ FIRST HEADER WORD CONTINUE IF: BITS 0—7=TRACK OK BITS 9—11=SECTOR OK BITS 12 =PARITY OK IF ERROR SHUT DOWN	SAME AS NORMAL READ		READ FIRST HEADER WORD DON'T CHECK TRACK OR SECTOR SR→DB AND DATA BREAK	WRITE FIRST HEADER WORD DATA BUFFER→ SERIAL REGISTER	READ OR WRITE UNTIL WORD COUNT OVERFLOWS THEN GO TO MAJOR A AND SHUT DOWN	E
F	READ SECOND HEADER WORD CONTINUE IF: BITS 1-5 =SECTOR OK BIT 12 =PARITY OK IF ERROR SHUT DOWN	SAME AS NORMAL READ BUT ALSO CHECK BIT 0 CONTINUE IF: BIT 0 = NO PROTECT =0 SHUT DOWN IF: BIT 0 = PROTECT =1		READ SECOND HEADER WORD DON'T CHECK PROTECT OR SECTOR OK SR→DB AND DATA BREAK	WRITE SECOND HEADER WORD		F
G	WAIT FOR 90 MICROSECONDS	DATA BREAK WAIT FOR 80 MICROSECONDS		SAME AS NORMAL READ	WRITE 100 MICROSECOND PREAMBLE DATA BREAK FOR FIRST DATA WORD		G
H	LOOK FOR DATA SYNC BIT	WRITE ZERO'S FOR 20 US THEN WRITE SYNC BIT DATA BUFFER→ SERIAL REGISTER		SAME AS NORMAL READ	WRITE SYNC BIT DATA BUFFER→ SERIAL REGISTER		H
I	READ 256 DATA WORDS TRANSFER FROM SR→DB AND DATA BREAK READ LONGITUDINAL PARITY SR→LP	WRITE 256 WORDS WITH 255 MORE DATA BREAKS - DB→SR: SET UP LONGITUDINAL PARITY - LP→SR: WRITE LONGITUDINAL PARITY		SAME AS NORMAL READ	SAME AS NORMAL WRITE		I
J	WAIT 250 NANOSECONDS TO IGNORE POSTAMBLE CHECK LONGITUDINAL PARITY (7777) SHUT DOWN IF ERROR	WRITE POSTAMBLE TURN OFF WRITE		SAME AS NORMAL READ	SAME AS NORMAL WRITE		J
K	WAIT 80 MICROSECONDS IF PARITY ERROR OR WORD COUNT OVERFLOW GO TO MAJOR A AND SHUT DOWN IF NO WCO GO TO MAJOR A AND WAIT FOR TRACK LOCATED (1.4 US) AND CONTINUE	WAIT 80 MICROSECONDS BEFORE TURNING OFF ERASE AND MAKE A DECISION SAME AS NORMAL READ		GO TO MAJOR A, SHUT DOWN	GO TO MAJOR A, SHUT DOWN		K

FIRST USED ON OPT/MOD	QTY.	DESCRIPTION	PART NO.	ITEM NO.
RKØI		PARTS LIST		

UNLESS OTHERWISE SPECIFIED
UNLESS OTHERWISE SPECIFIED
DIMENSION IN INCHES
TOLERANCES
DECIMALS ± .005 FRACTIONS ± 1/64 ANGLES ± 0°30'
FINAL SURFACE QUALITY
REMOVE BURRS AND BREAK SHARP CORNERS

MATERIAL —

FINISH —

DRN. S. Lynnway DATE 10-28-69
CHK'D. W. Mathews DATE 5/7/70
ENG. T.D. Milton DATE 4/20/70
PROJ. ENG. C.H. Nelson DATE 4/27/70
PROD. W. Smith DATE 4-27-70
NEXT HIGHER ASSY RKØI
SCALE —
SHEET 1 OF 1

digital EQUIPMENT CORPORATION MAYNARD MASSACHUSETTS

TITLE FLOW

SIZE D CODE F NUMBER RKØI-X-14 REV.

DIST.

REVISIONS REV. CHANGE NO. CHK

DEC FORM NO ORD 102A

Figure II-3 RK01 Flow Diagram

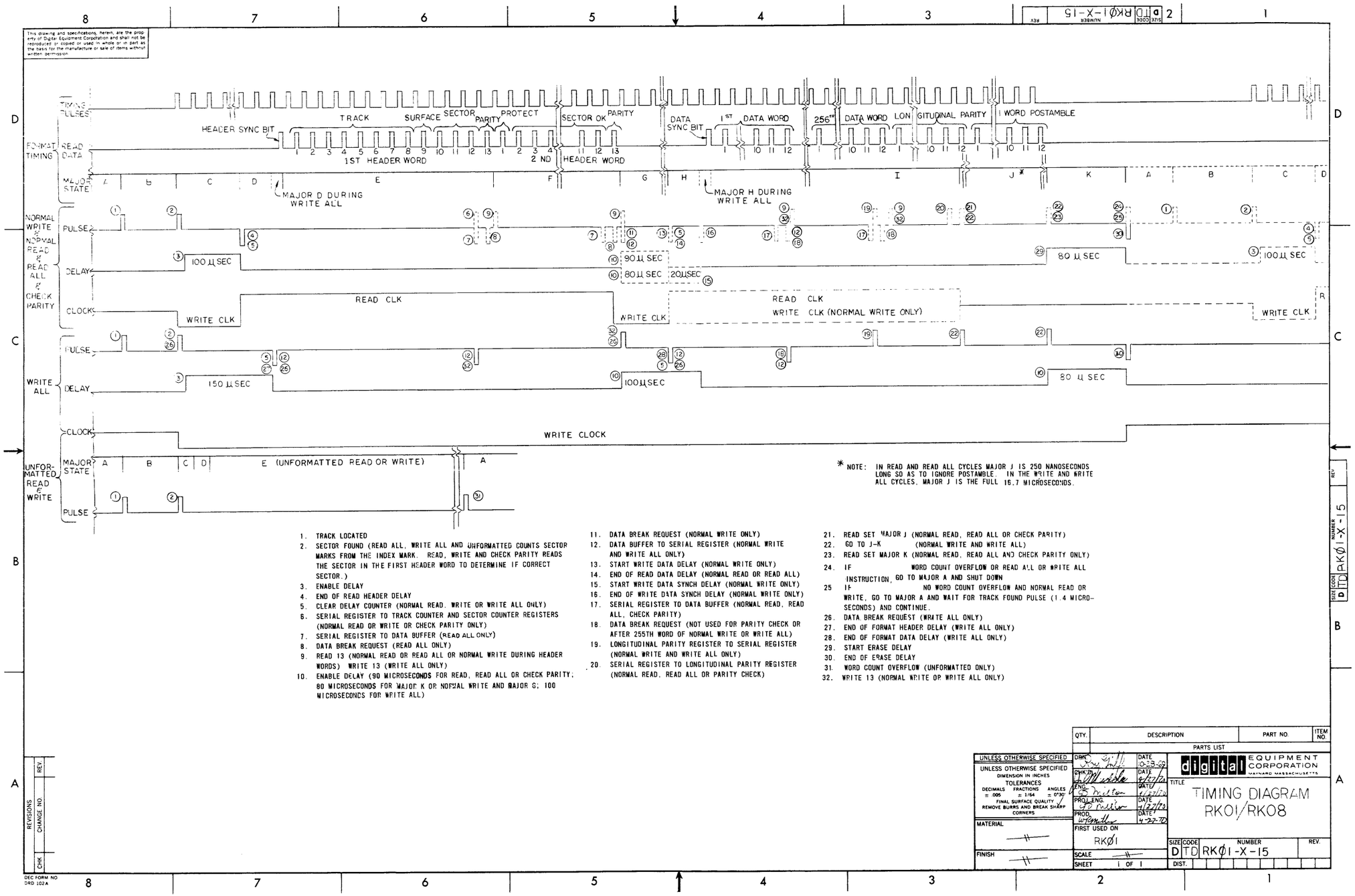

Figure II-4 RK01/RK08 Timing Diagram

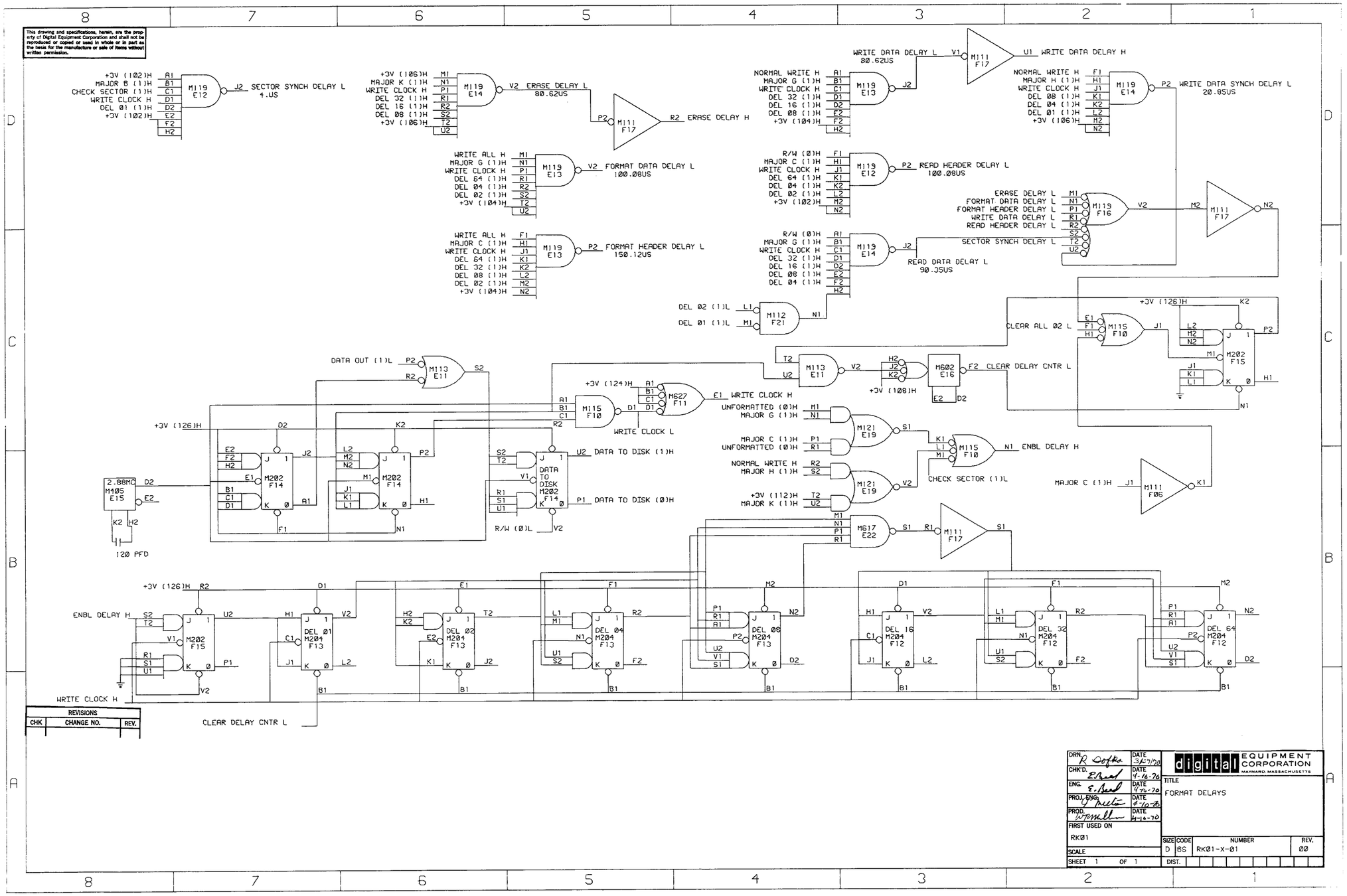

Figure II-5 Format Delays Block Schematic Diagram

This drawing and specifications, herein, are the property of Digital Equipment Corporation and shall not be reproduced or copied or used in whole or in part as the basis for the manufacture or sale of items without written permission.

M901
E06

A1	TRACK LOCATED L
B1	NEW SELECT (1)L
C1	NEW SELECT PULSE L
D1	SECTOR PROTECT SW H
E1	SET TIME OUT ERROR L
F1	SET TRACK FOUND H
H1	PROTECT L
J1	ERASE DELAY L
K1	SECTOR SYNCH DELAY L
L1	ERASE DELAY H
M1	WRITE DATA DELAY H
N1	WRITE DATA DELAY L
P1	FORMAT HEADER DELAY L
R1	READ HEADER DELAY L
S1	READ DATA DELAY L
T1	WRITE CLOCK H
U1	FORMAT DATA DELAY L
V1	WRITE DATA SYNCH DELAY L

M901
E07

A1	AC 00 (1)H
B1	AC 01 (1)H
C1	AC 02 (1)H
D1	AC 03 (1)H
E1	AC 04 (1)H
F1	AC 05 (1)H
H1	AC 06 (1)H
J1	AC 07 (1)H
K1	AC 08 (1)H
L1	AC 09 (1)H
M1	AC 10 (1)H
N1	AC 11 (1)H
P1	CLEAR ALL 02 H
R1	CLEAR ALL 02 L
S1	LOAD DISK ADDR H
T1	LOAD COMMAND H
U1	IOT START L
V1	LOAD DISK ADDR L

M901
E08

A1	TRACK ADDR 00 (1)H
B1	TRACK ADDR 01 (1)H
C1	TRACK ADDR 02 (1)H
D1	TRACK ADDR 03 (1)H
E1	TRACK ADDR 04 (1)H
F1	TRACK ADDR 05 (1)H
H1	TRACK ADDR 06 (1)H
J1	TRACK ADDR 07 (1)H
K1	DISK READ CLOCK L
L1	IOT START H
M1	MAJOR C (1)H
N1	MAJOR G (1)H
P1	MAJOR H (1)H
R1	MAJOR K (1)H
S1	IOT CLEAR L
T1	MAJOR B (1)H
U1	MAJOR A (1)H
V1	NEW SELECT (1)H

M901
E06

A2	EXT DISK 00 (1)H
B2	EXT DISK 01 (1)H
C2	EXT DISK 02 (1)H
D2	INDEX PULSE H
E2	SECTOR PULSE H
F2	DISK READ DATA H
H2	SET NON-DRIVE ERROR L
J2	TRACK EQUAL L
K2	SR 00 (1)H
L2	SR 01 (1)H
M2	SR 02 (1)H
N2	SR 03 (1)H
P2	SR 04 (1)H
R2	SR 05 (1)H
S2	SR 06 (1)H
T2	SR 07 (1)H
U2	SR TO COUNTER H
V2	RESET NEW SELECT H

M901
E07

A2	DISK ADDR TO COUNTER H
B2	UNFORMATTED (0)H
C2	MAIN 00 (1)L
D2	LOAD COMMAND L
E2	R/W (0)L
F2	R/W (0)H
H2	SELECT SURFACE (1)H
J2	CHECK SECTOR (1)L
K2	CHECK SECTOR (1)H
L2	DATA OUT (1)L
M2	NORMAL WRITE H
N2	SEEK TRACK (0)H
P2	SEEK TRACK (1)H
R2	UNFORMATTED WRITE L
S2	WRITE ALL L
T2	WRITE ALL H
U2	BUSY (0)L
V2	NORMAL R/W H

M901
E08

A2	TRACK CNTR 00 (1)H
B2	TRACK CNTR 01 (1)H
C2	TRACK CNTR 02 (1)H
D2	TRACK CNTR 03 (1)H
E2	TRACK CNTR 04 (1)H
F2	TRACK CNTR 05 (1)H
H2	TRACK CNTR 06 (1)H
J2	TRACK CNTR 07 (1)H
K2	WRITE CLOCK L
L2	RESET TRK SEC CNTRS L
M2	INH ERROR (1)L
N2	ERASE (1)L
P2	WRITE FLOP (1)H
R2	
S2	INITIALIZE L
T2	
U2	
V2	MAJOR D+E+F+H+I H

REVISIONS		
CHK	CHANGE NO.	REV.

DRN. R. Dufton	DATE 3-6-70	digital EQUIPMENT CORPORATION MAYNARD, MASSACHUSETTS
CHK'D. E. Beal	DATE 4-10-70	TITLE CABLE TO RK08
ENG. E. Beal	DATE 4-10-70	
PROJ. ENG. R. Mitton	DATE 4-10-70	
PROD. W. Roselle	DATE 4-10-70	
FIRST USED ON RK01		SIZE D · CODE IC · NUMBER RK01-X-09 · REV. 00
SCALE		
SHEET 1 OF 1		DIST.

Figure II-6 Cable to RK08 Block Schematic Diagram

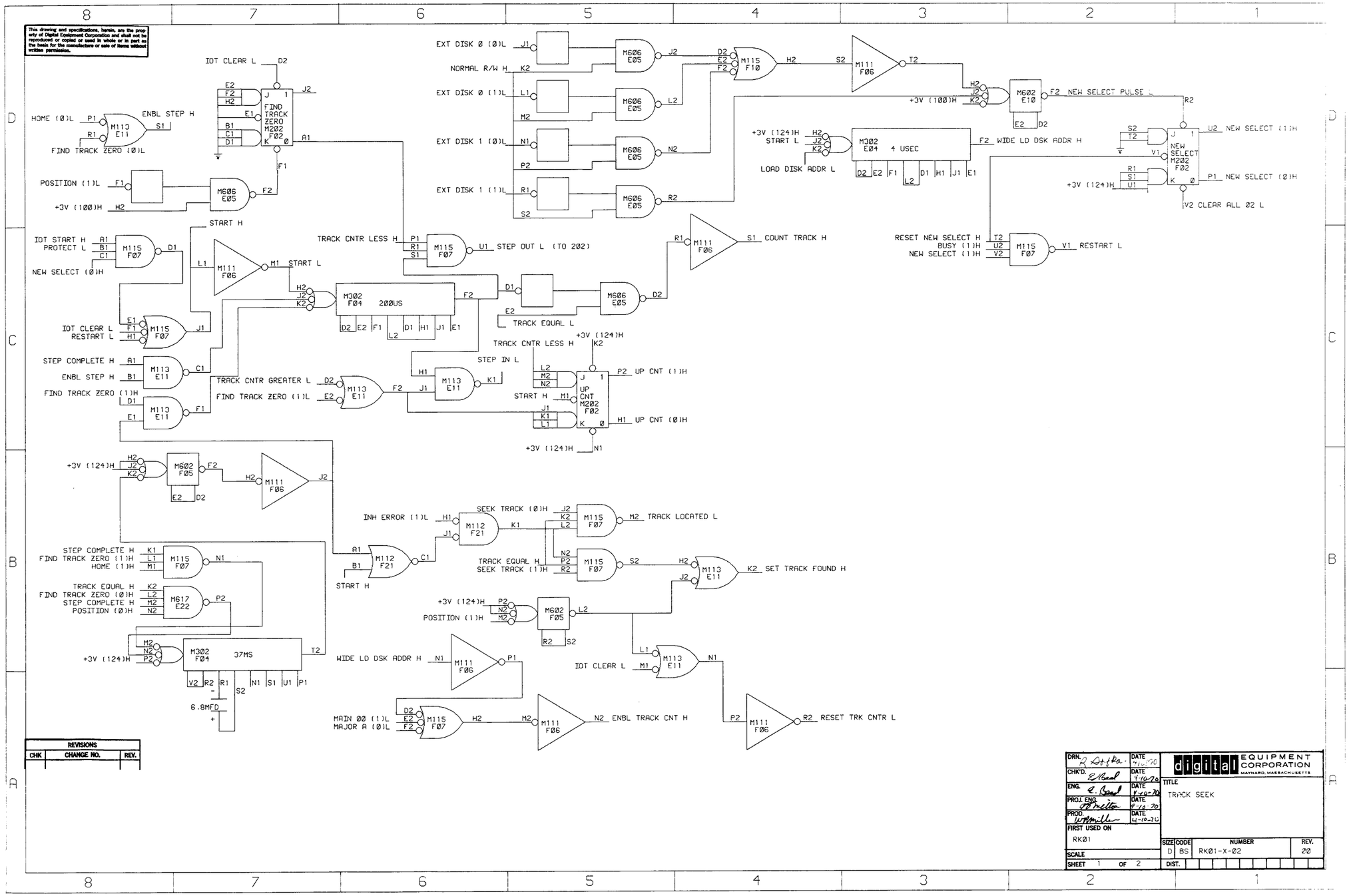

Figure II-7 Track Seek Block Schematic Diagram
(Sheet 1)

This drawing and specifications, herein, are the property of Digital Equipment Corporation and shall not be reproduced or copied or used in whole or in part as the basis for the manufacture or sale of items without written permission.

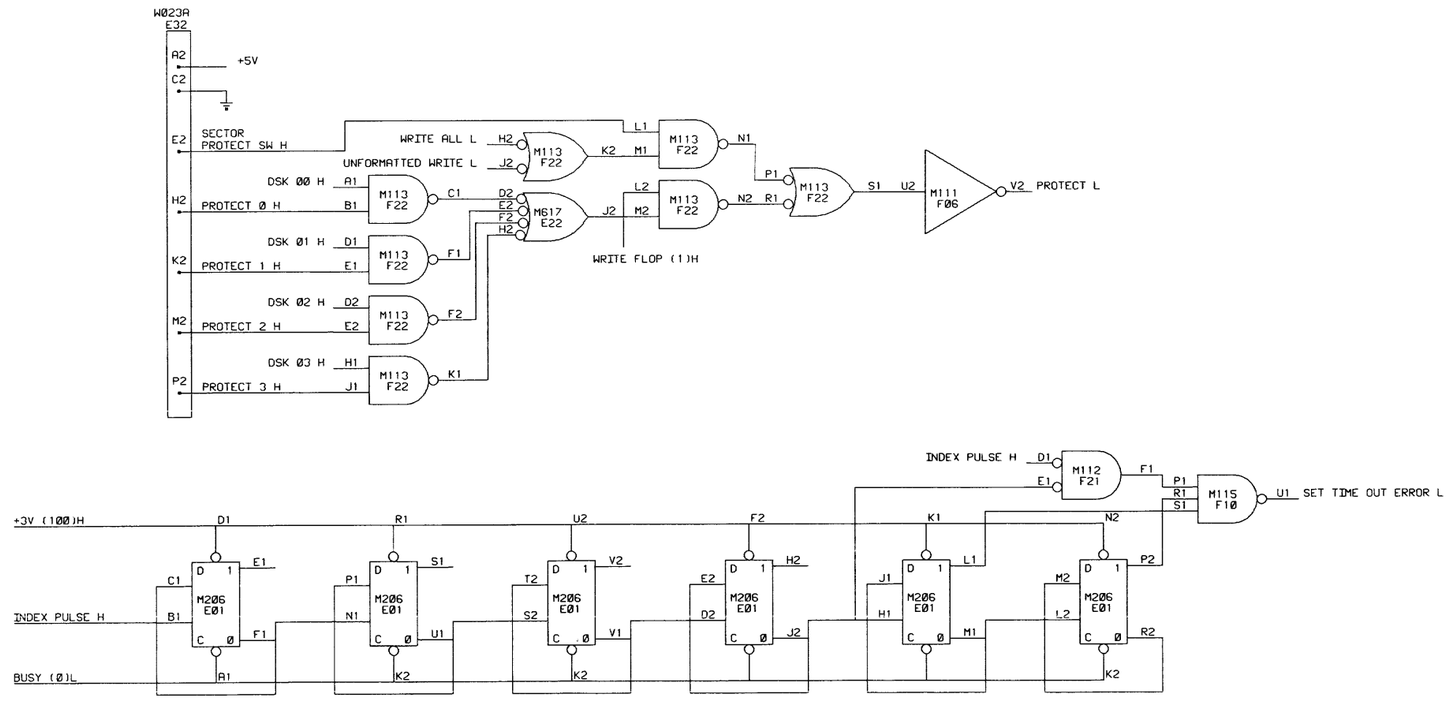

REVISIONS		
CHK	CHANGE NO.	REV.

DRN. R. Dipta	DATE 3/24/70	digital EQUIPMENT CORPORATION MAYNARD, MASSACHUSETTS
CHK'D. E. Beal	DATE 4-10-70	TITLE TRACK SEEK
ENG. E. Beal	DATE 4-10-70	
PROJ. ENG. G. Milton	DATE 4-10-70	
PROD. W. Miller	DATE 4-10-70	
FIRST USED ON RK01		SIZE D · CODE BS · NUMBER RK01-X-02 · REV. 00
SCALE		
SHEET 2 OF 2		DIST.

Figure II-7 Track Seek Block Schematic Diagram
(Sheet 2)

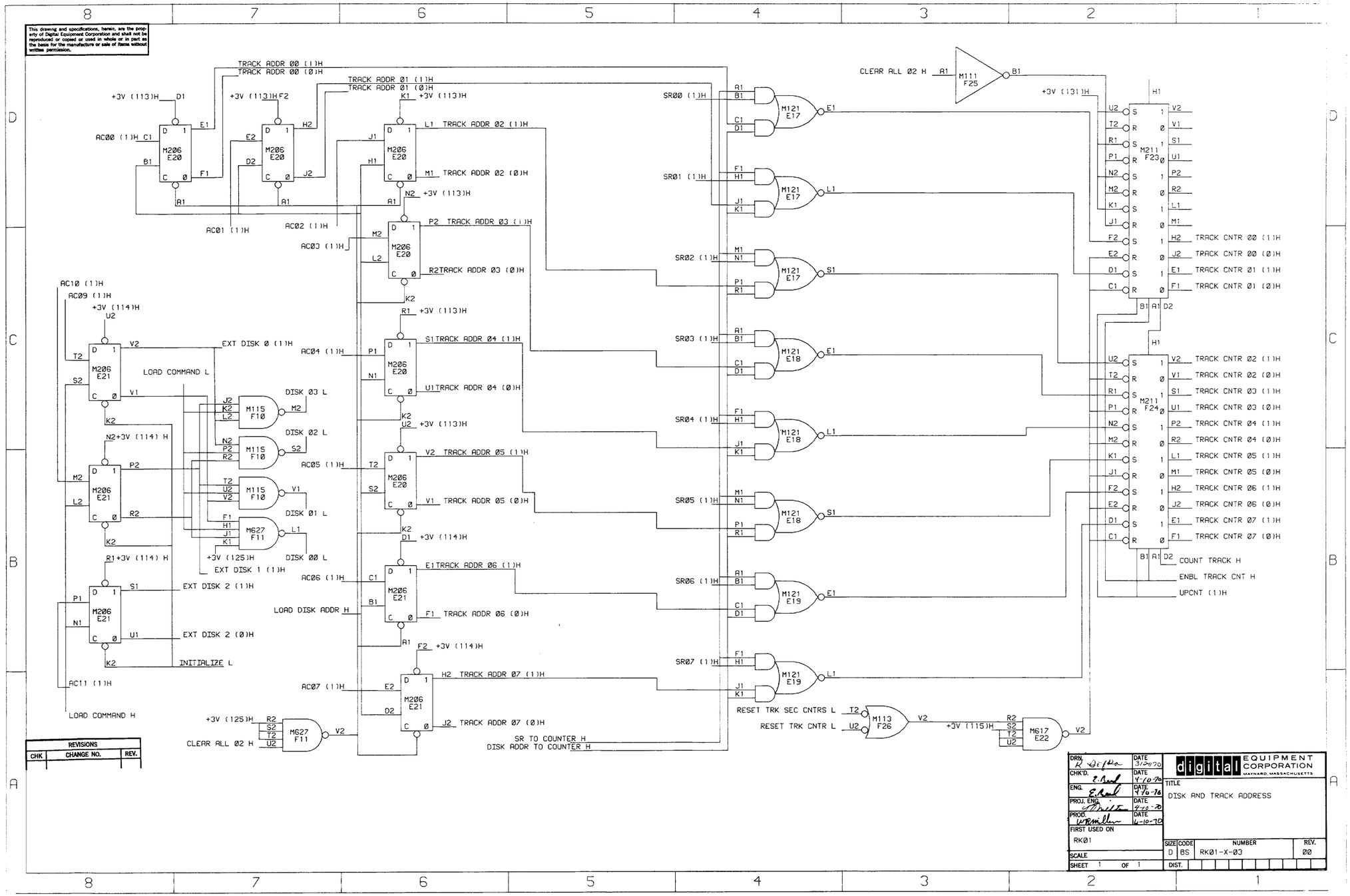

Figure II-8 Disk and Track Address Block Schematic Diagram

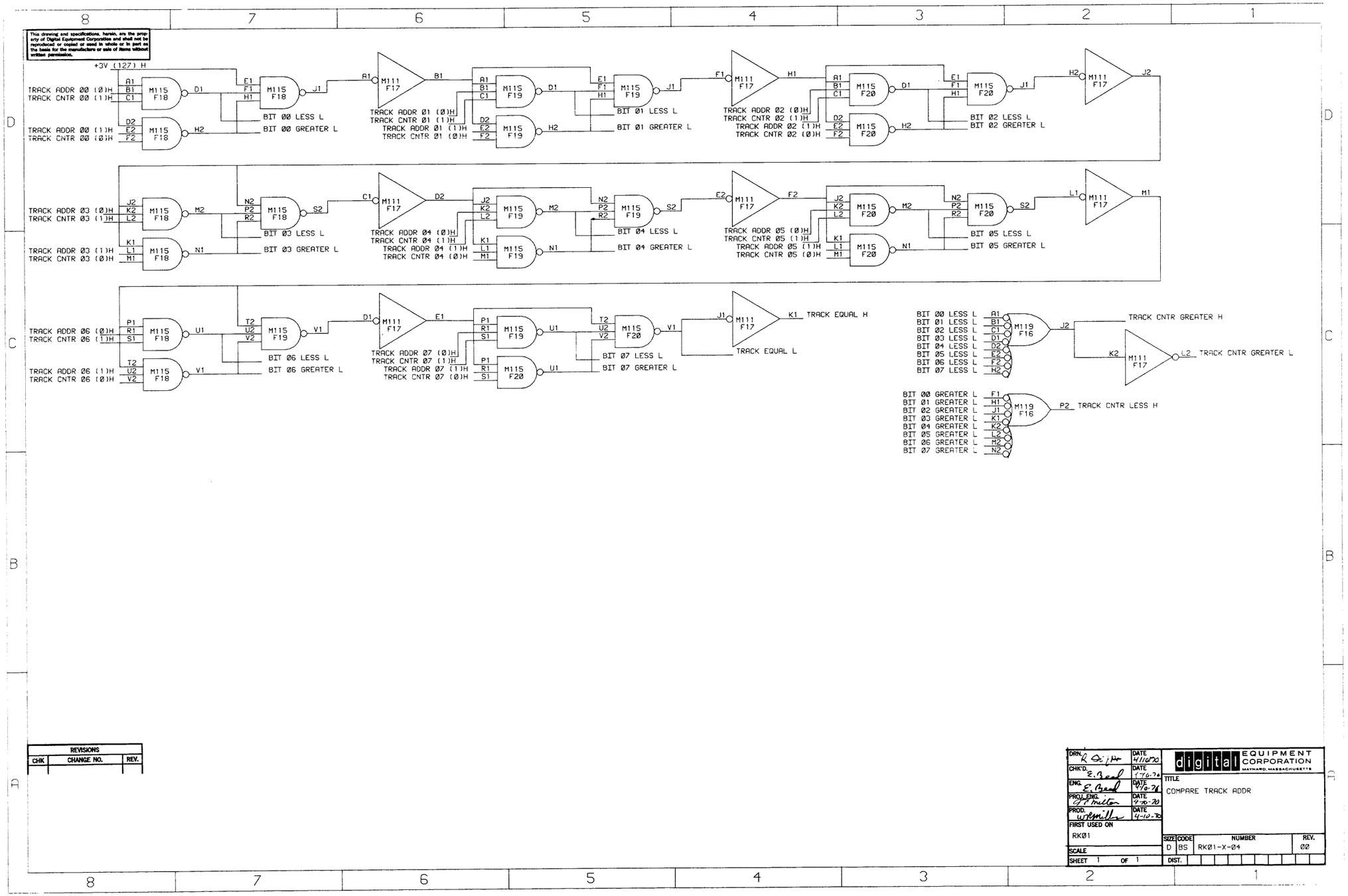

Figure II-9 Compare Track Address Block Schematic Diagram

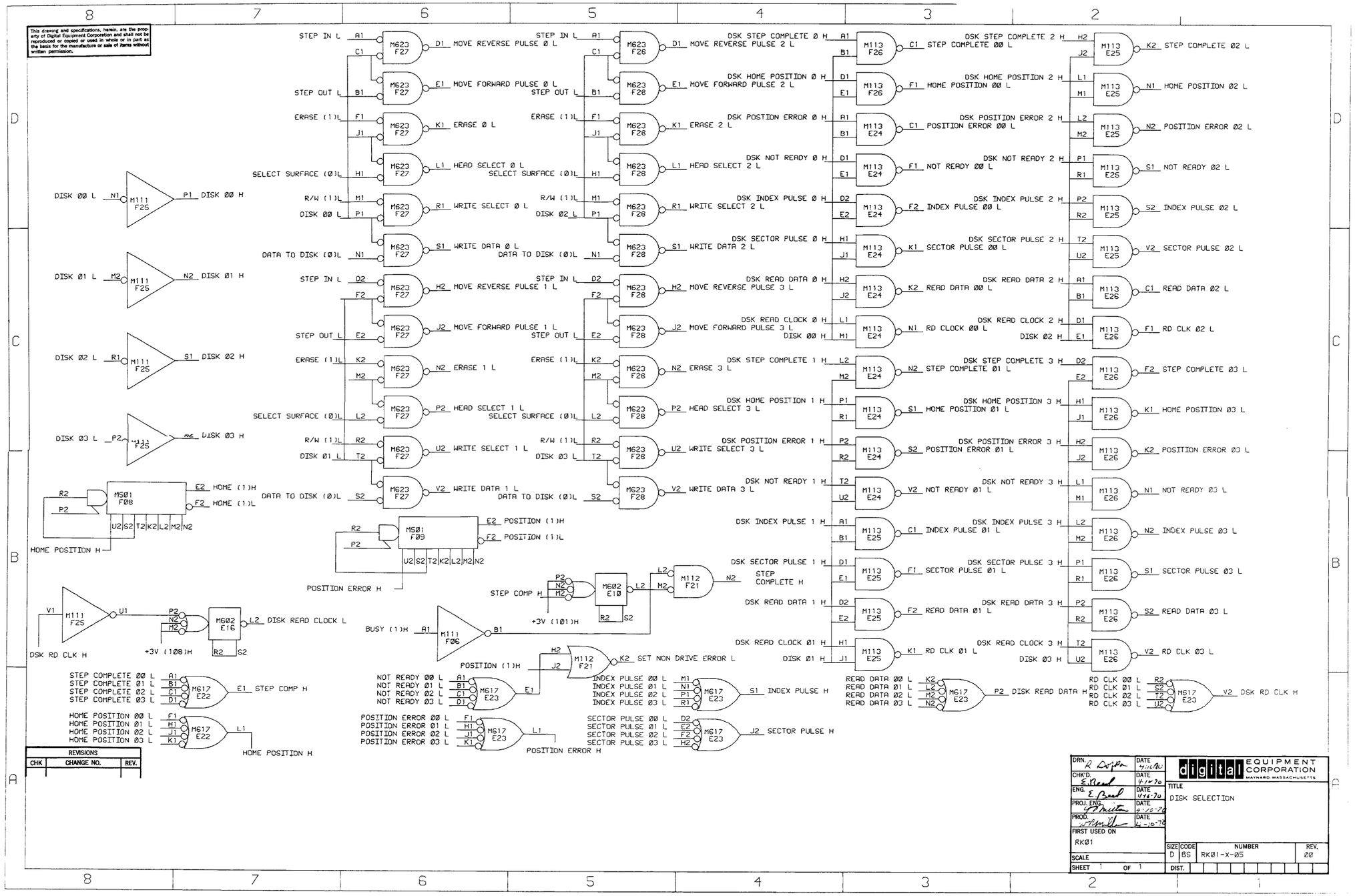

Figure II-10 Disk Selection Block Schematic Diagram

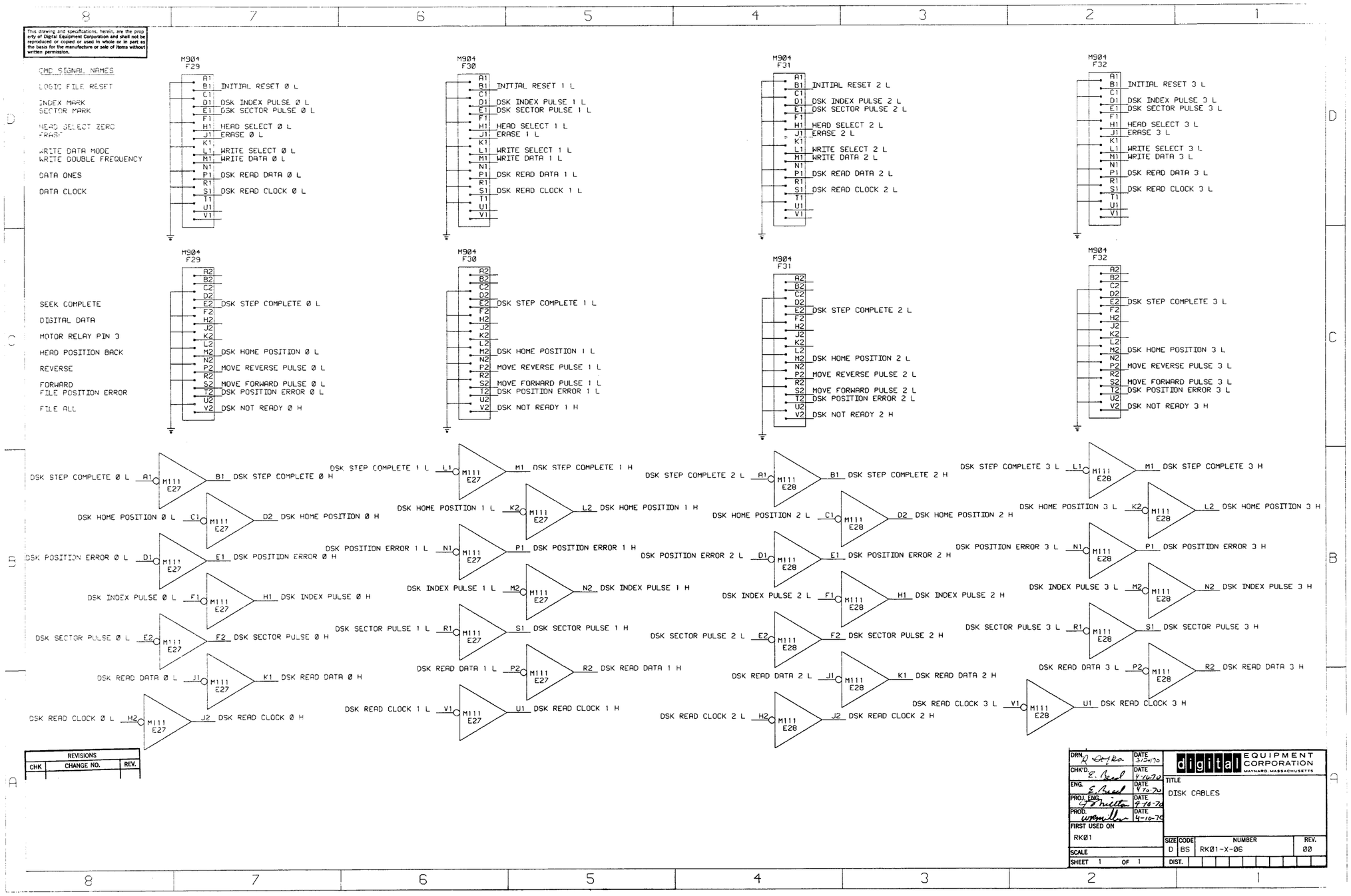

Figure II-11 Disk Cables Block Schematic Diagram

This drawing and specifications, herein, are the property of Digital Equipment Corporation and shall not be reproduced or copied or used in whole or in part as the basis for the manufacture or sale of items without written permission.

REVISIONS		
CHK	CHANGE NO.	REV.

DRN.	DATE 3/24/70	digital EQUIPMENT CORPORATION MAYNARD, MASSACHUSETTS
CHK'D. E. Reed	DATE 4-10-70	TITLE +3V LOADS
ENG. E. Reed	DATE 4-10-70	
PROJ. ENG.	DATE 4-10-70	
PROD.	DATE 4-10-70	
FIRST USED ON RKØ1		SIZE D · CODE BS · NUMBER RKØ1-X-Ø7 · REV. ØØ
SCALE		
SHEET 1 OF 1		DIST.

Figure II-12 +3V Loads Block Schematic Diagram

Figure II-13 +3V Clamp Block Schematic Diagram

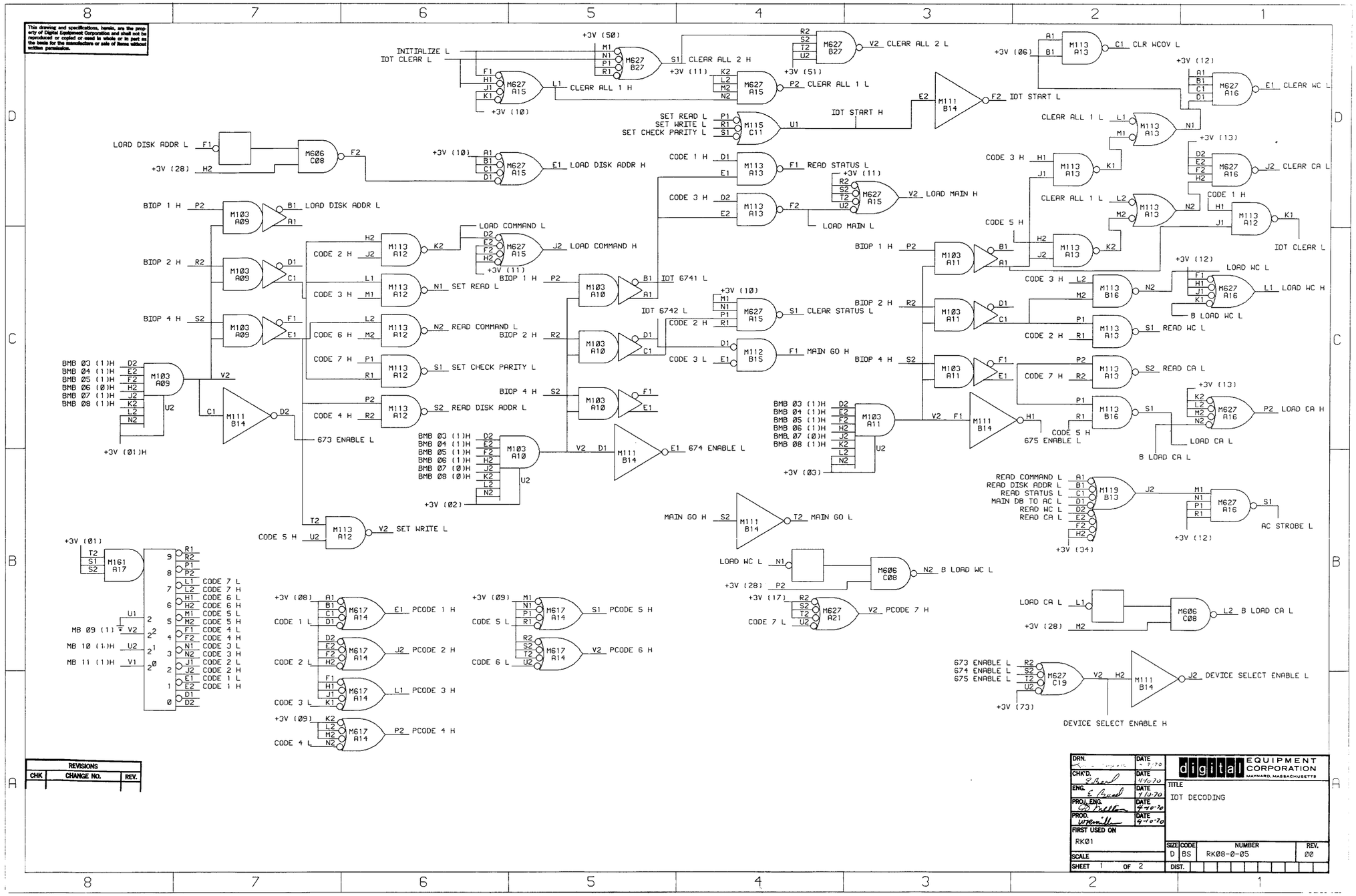

Figure II-14 IOT Decoding Block Schematic Diagram

This drawing and specifications, herein, are the property of Digital Equipment Corporation and shall not be reproduced or copied or used in whole or in part as the basis for the manufacture or sale of items without written permission.

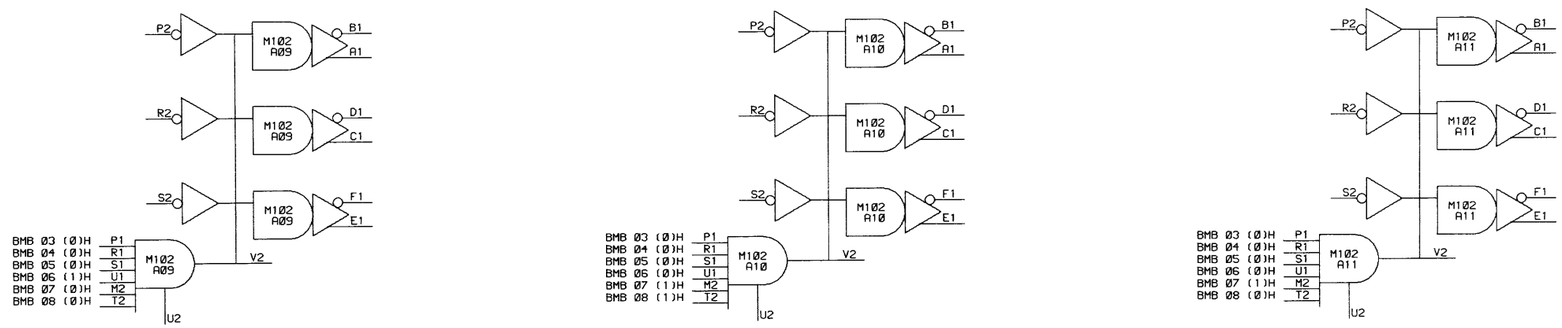

*NOTE: M102'S ARE USED IN PLACE OF M103'S WITH A NEGATIVE BUSS COMPUTER

REVISIONS		
CHK	CHANGE NO.	REV.

DRN.		DATE
CHK'D.		DATE 11/10/70
ENG.		DATE 11-10-70
PROJ. ENG.		DATE 11/10/70
PROD.		DATE 11-10-70
FIRST USED ON RK01		
SCALE		
SHEET 2 OF 2		

digital EQUIPMENT CORPORATION MAYNARD, MASSACHUSETTS

TITLE IOT DECODING

SIZE	CODE	NUMBER	REV.
D	BS	RK08-0-05	00

DIST.

Figure II-15 IOT Decoding Block Schematic Diagram

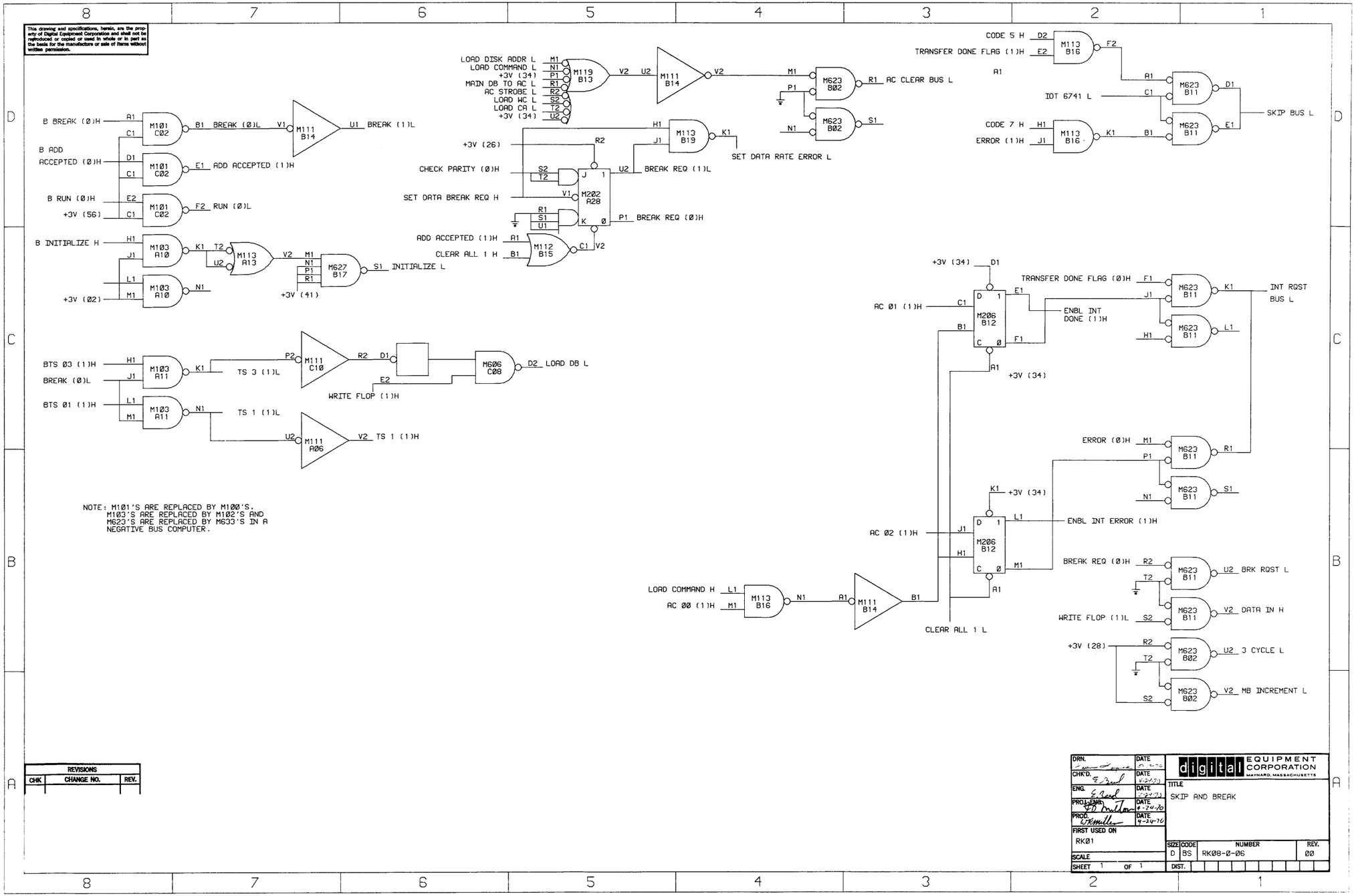

Figure II-16 Skip and Break Block Schematic Diagram

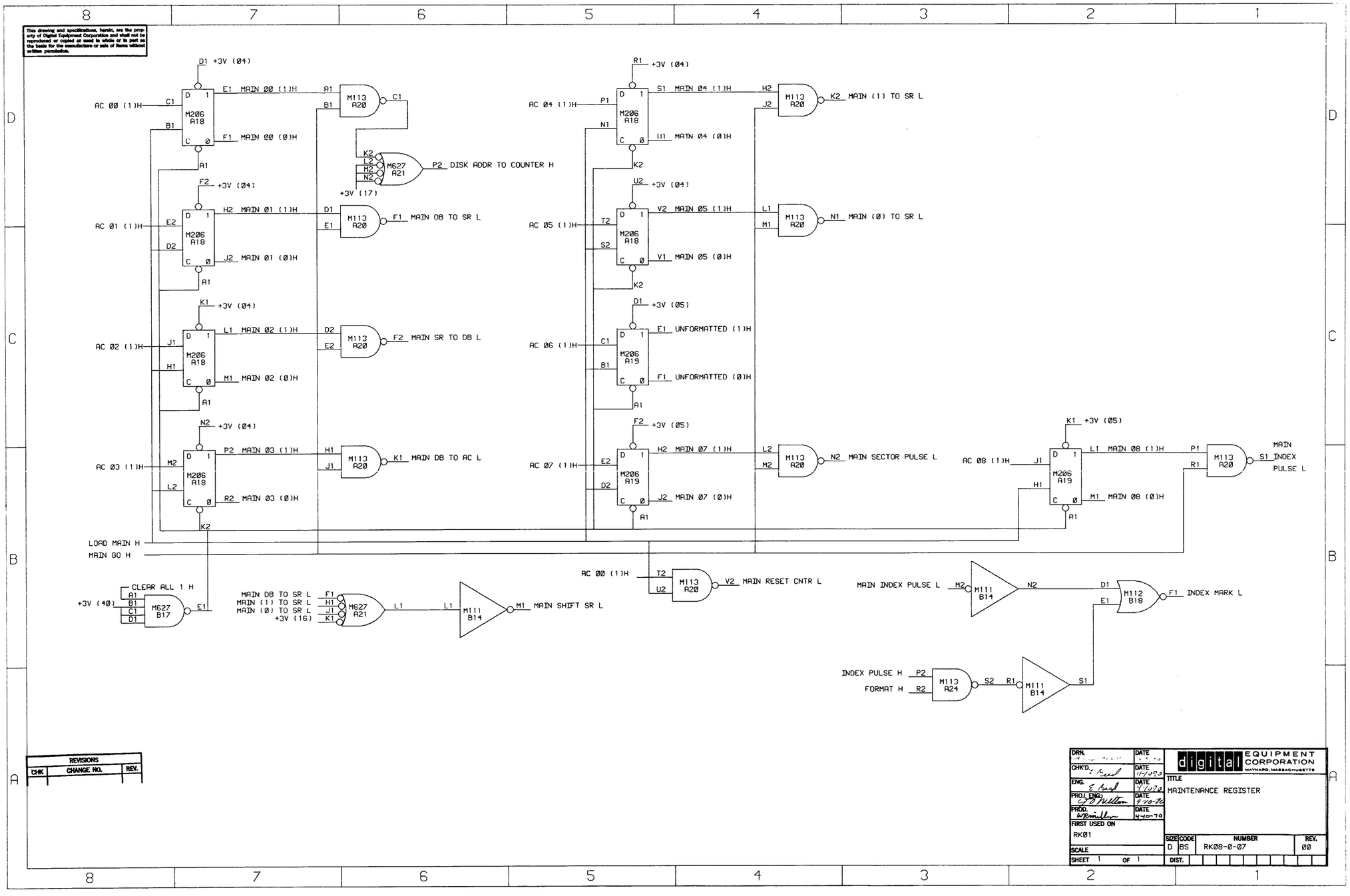

Figure II-17 Maintenance Register Block Schematic Diagram

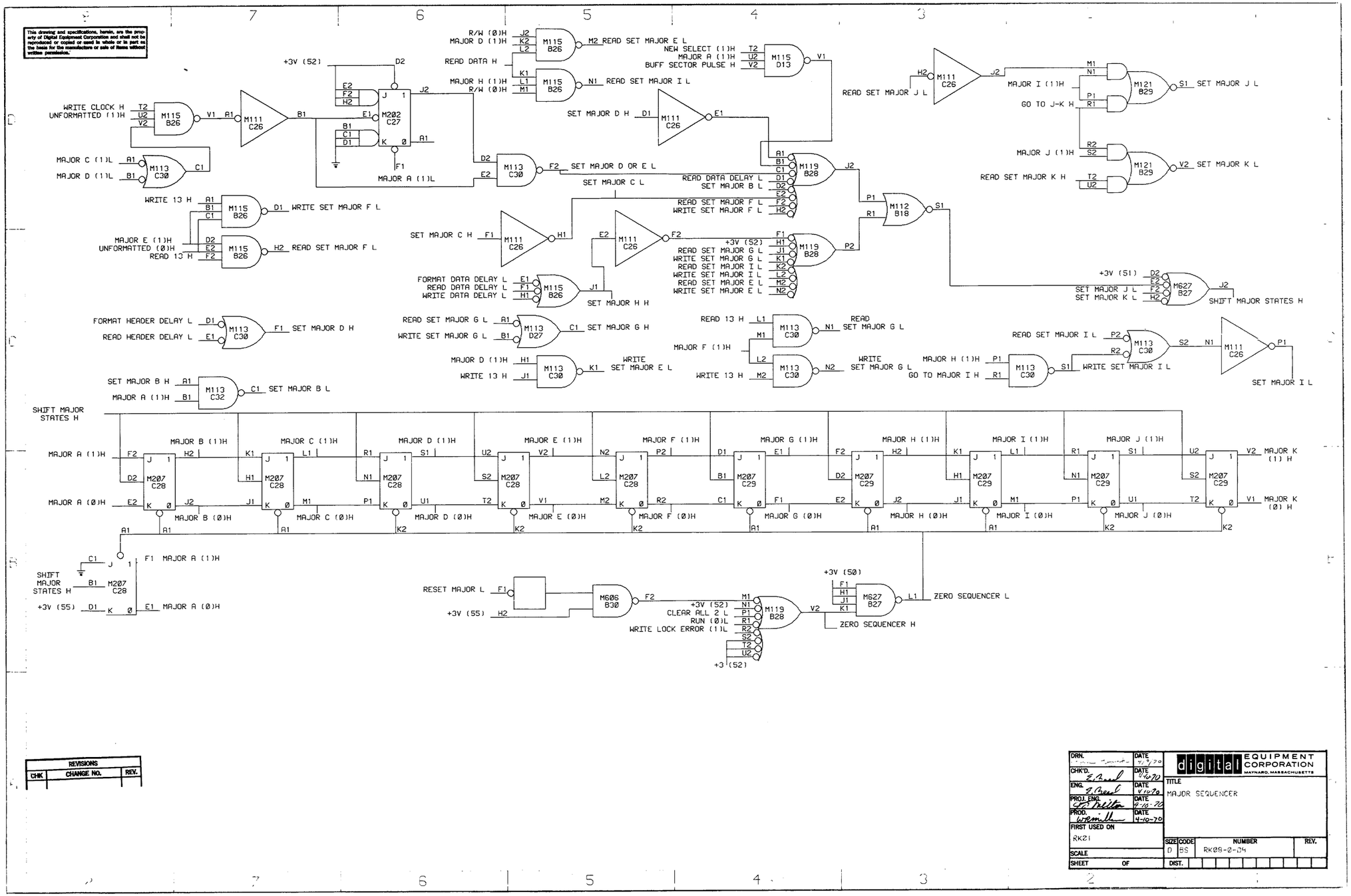

Figure II-18 Major Sequencer Register Block Schematic Diagram

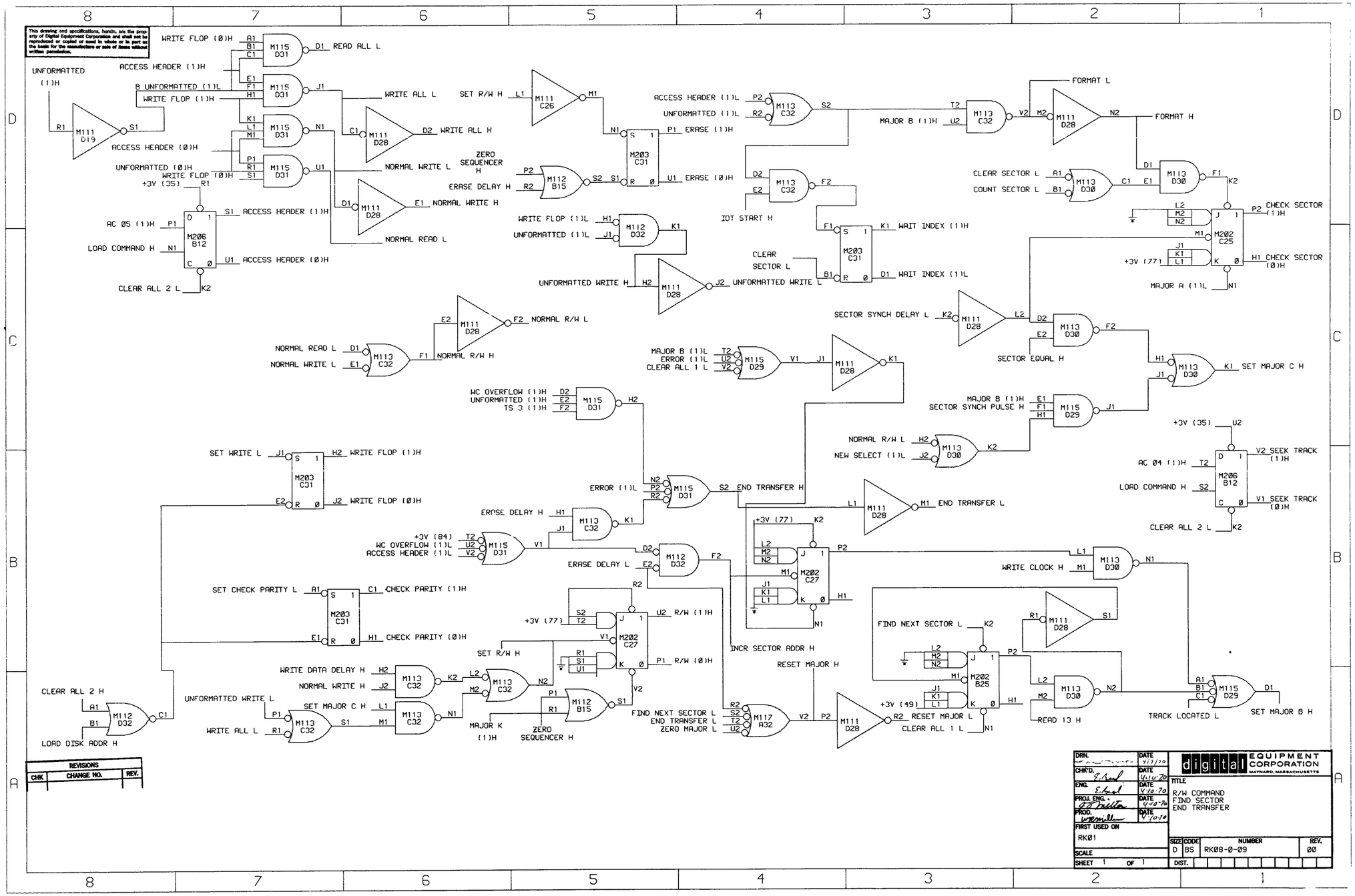

Figure II-19 R/W Command, Find Sector, End transfer
Block Schematic Diagram

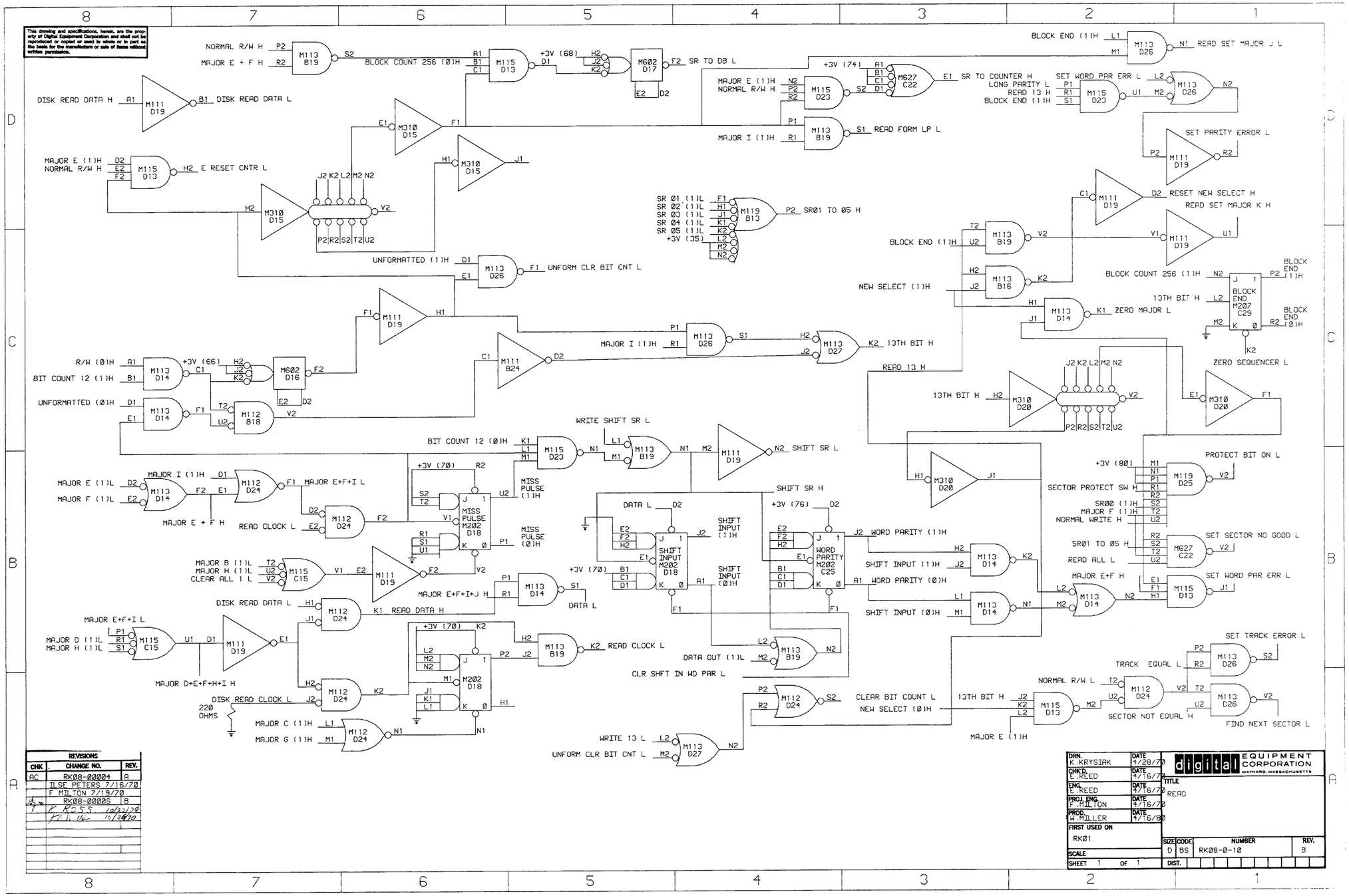

Figure II-20 Read Block Schematic Diagram

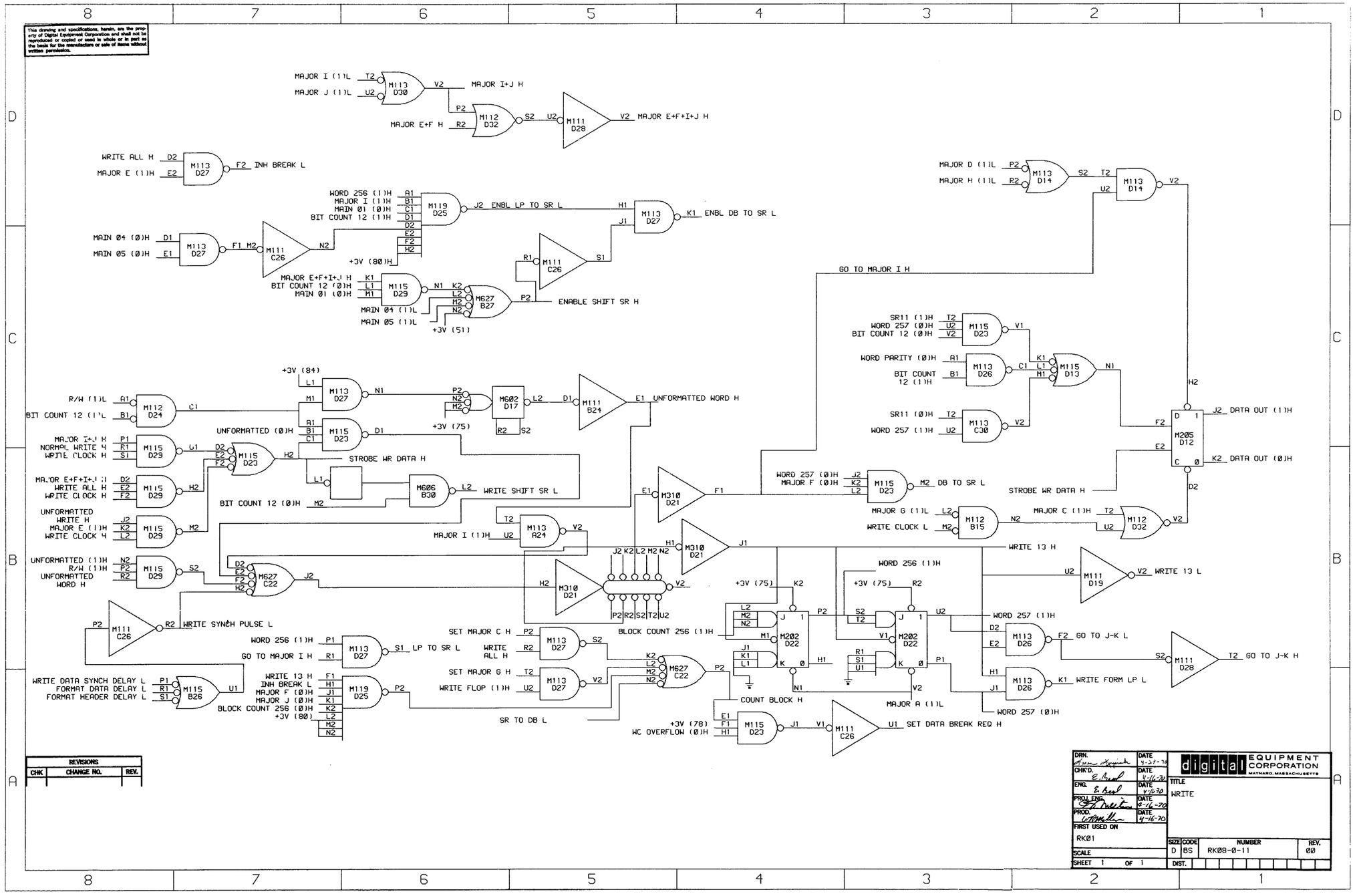

Figure II-21 Write Block Schematic Diagram

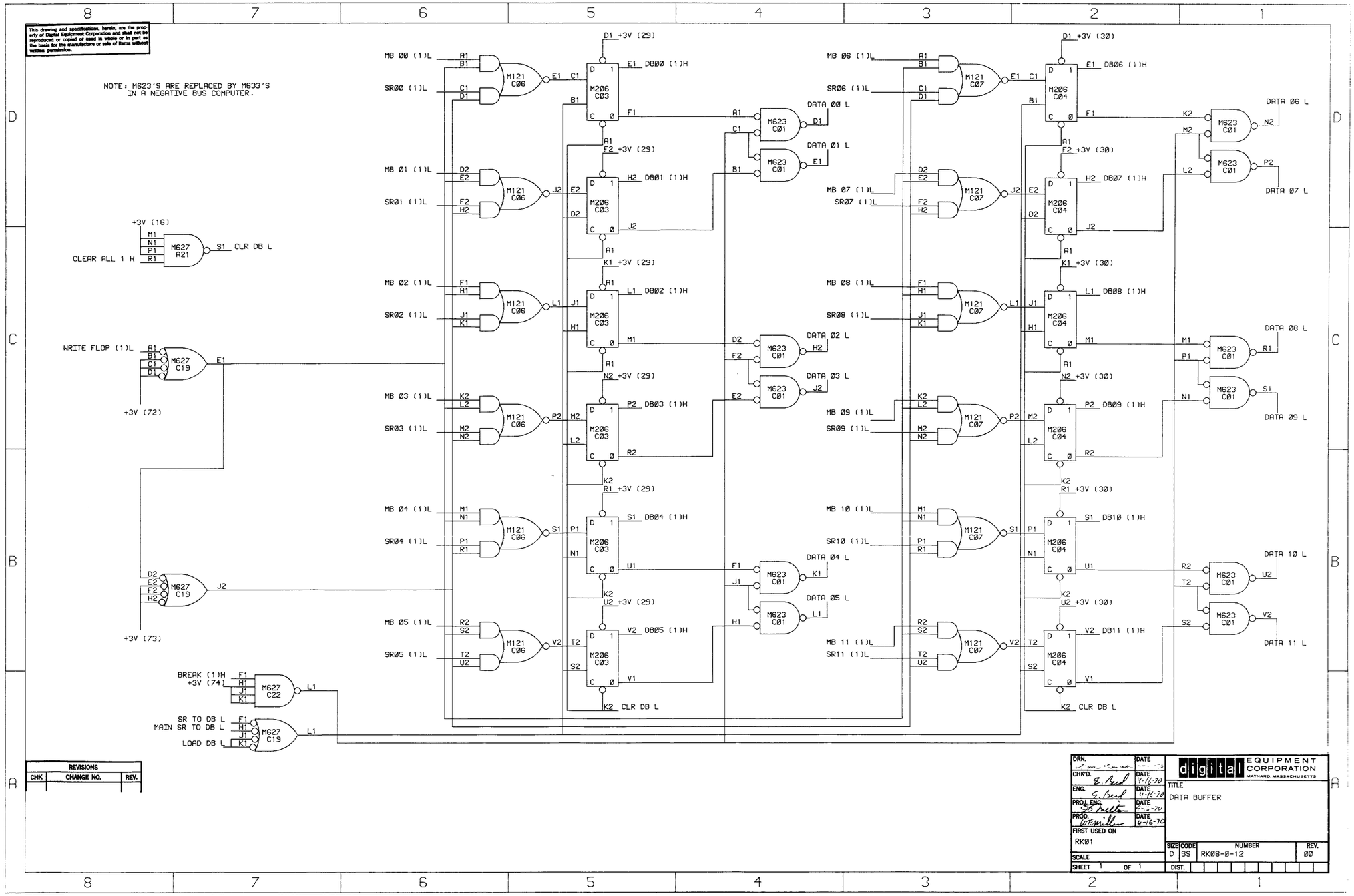

Figure II-22 Data Buffer Block Schematic Diagram

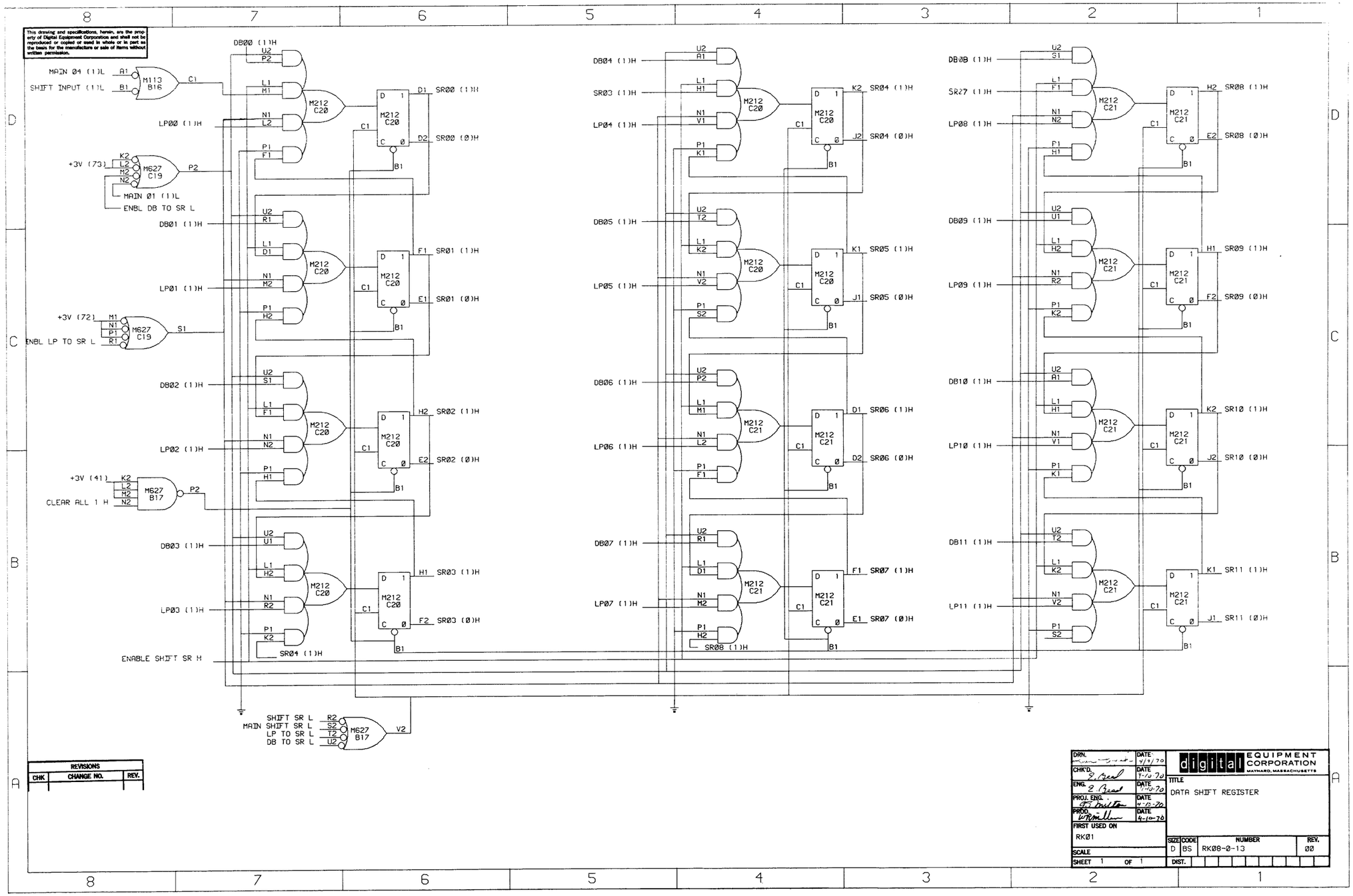

Figure II-23 Data Shift Register Block Schematic Diagram

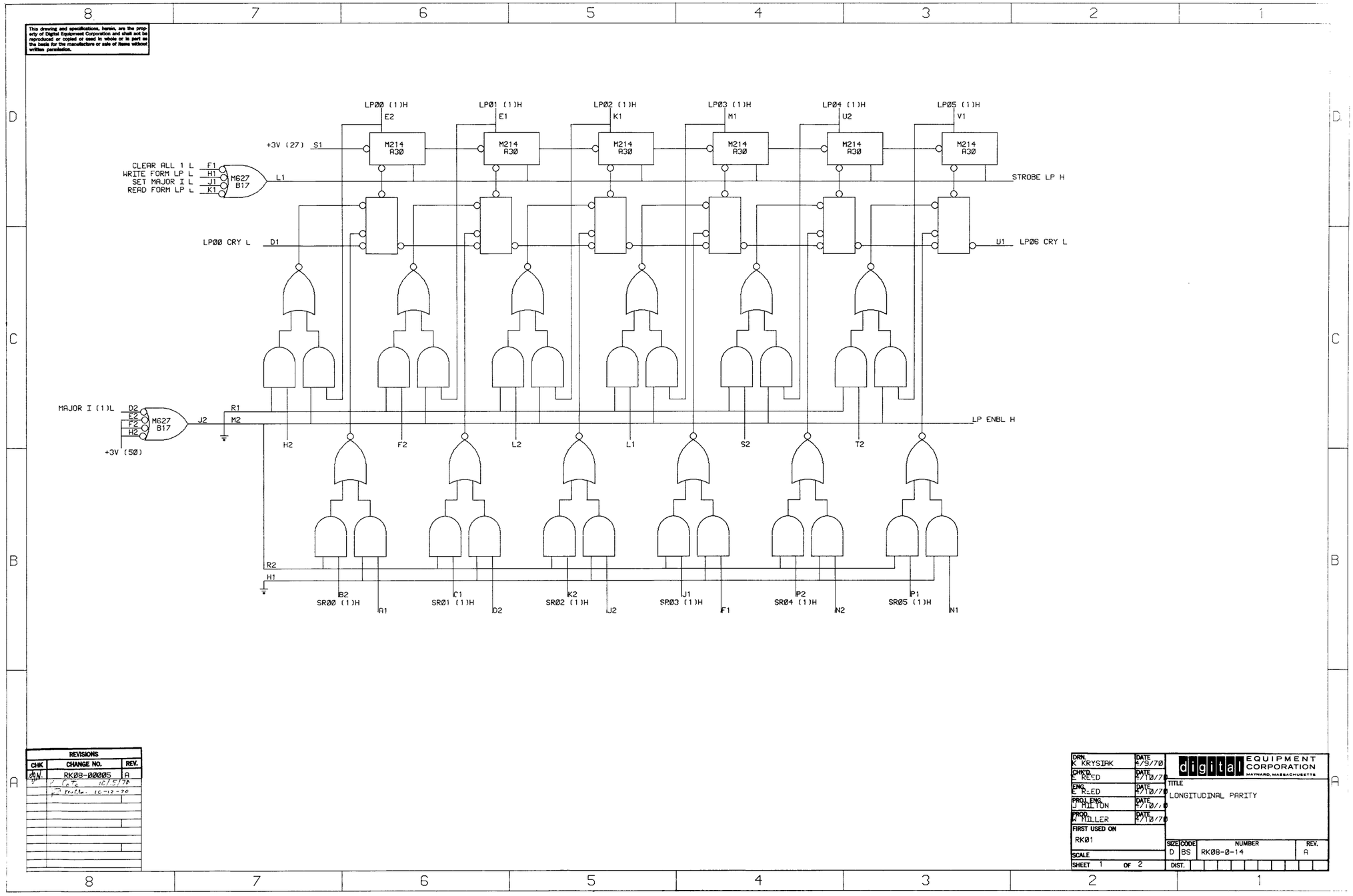

Figure II-24 Longitudinal Parity Block Schematic Diagram
(Sheet 1 of 2)

This drawing and specifications, herein, are the property of Digital Equipment Corporation and shall not be reproduced or copied or used in whole or in part as the basis for the manufacture or sale of items without written permission.

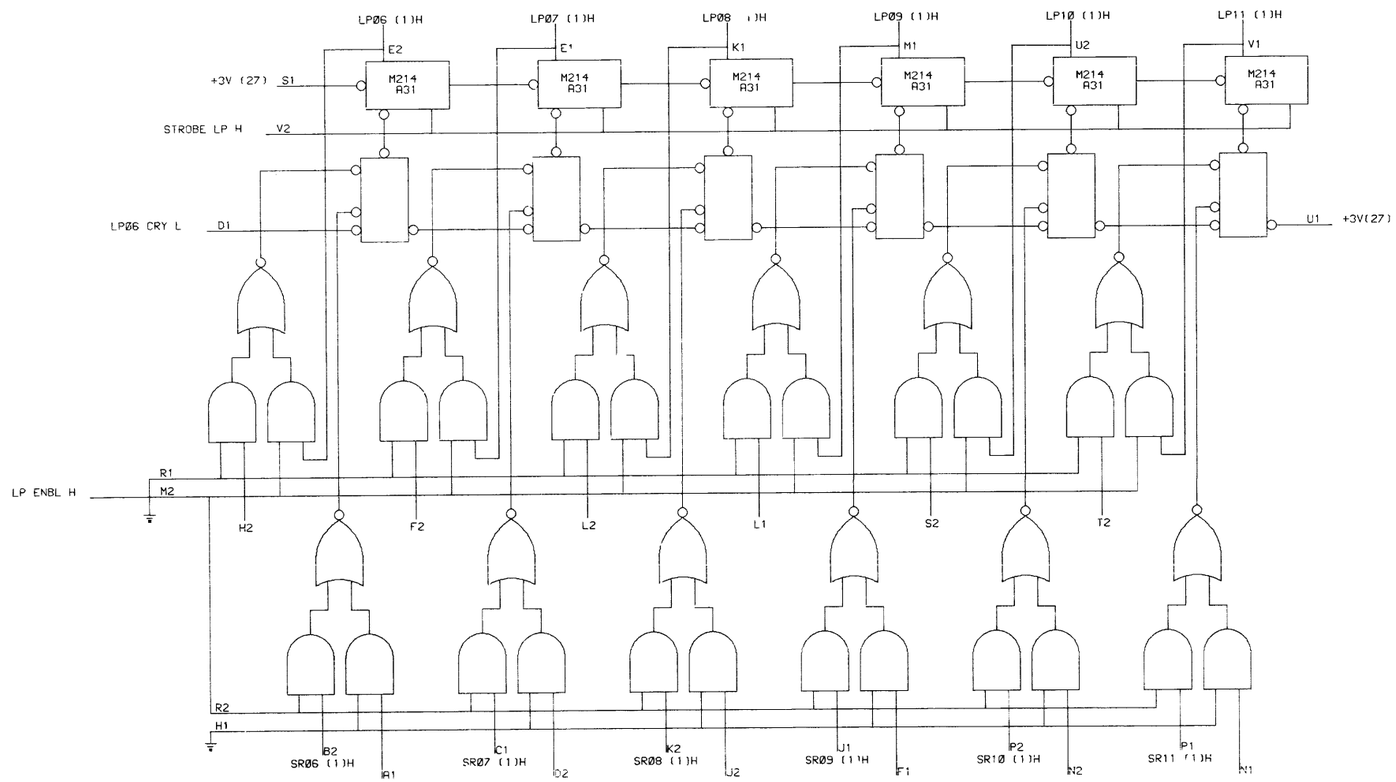

REVISIONS		
CHK	CHANGE NO.	REV.

DRN. K KRYSIAK	DATE 4/9/70	digital EQUIPMENT CORPORATION MAYNARD, MASSACHUSETTS
CHK'D. E REED	DATE 4/10/70	TITLE LONGITUDINAL PARITY
ENG. E REED	DATE 4/10/70	
PROJ. ENG. J MILTON	DATE 4/10/70	
PROD. H MILLER	DATE 4/10/70	
FIRST USED ON RK01		SIZE D · CODE BS · NUMBER RK08-0-14 · REV. A
SCALE		
SHEET 2 OF 2		DIST.

Figure II-25 Longitudinal Parity Block Schematic Diagram
(Sheet 2 of 2)

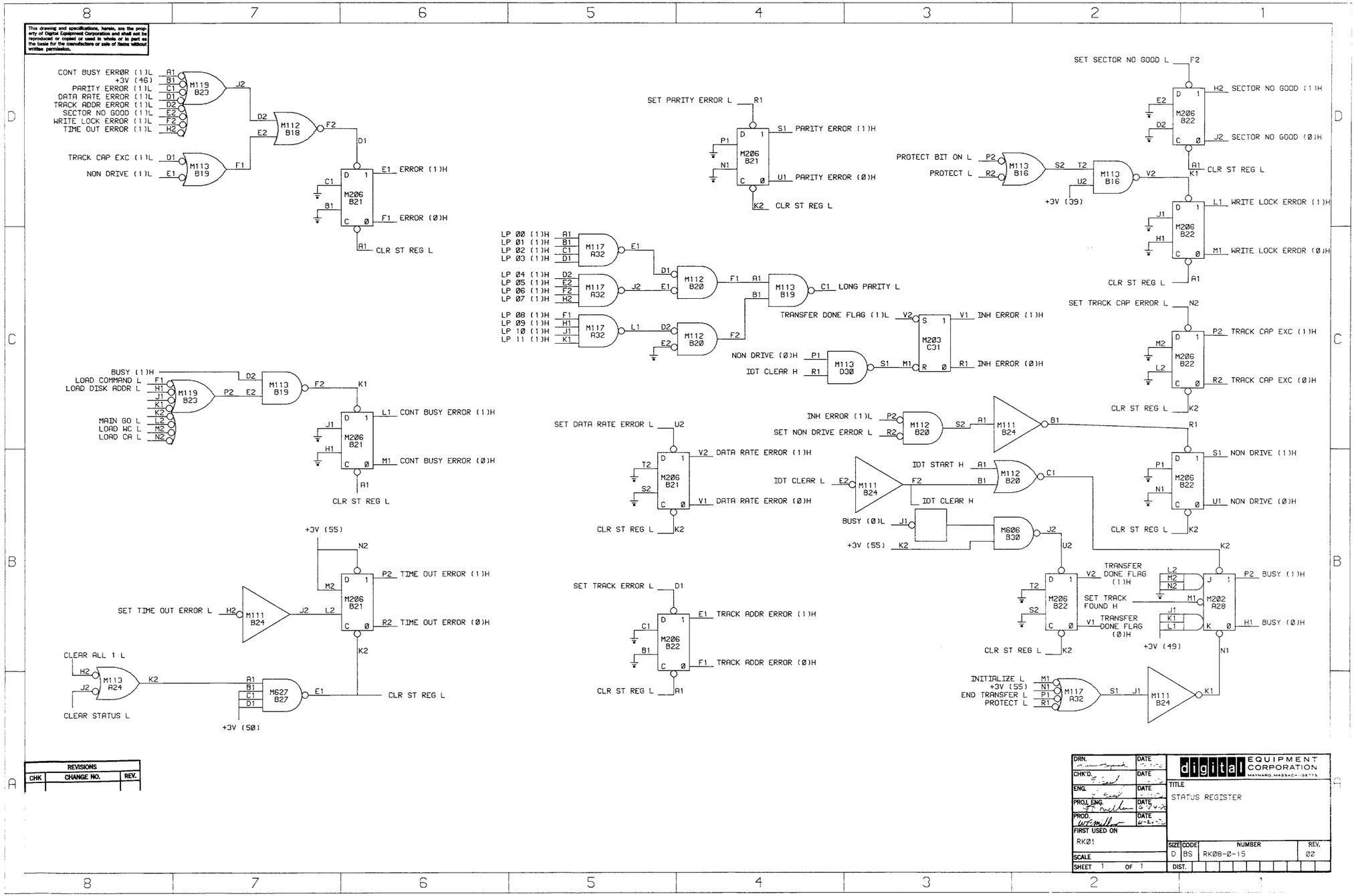

Figure II-26 Status Register Block Schematic Diagram

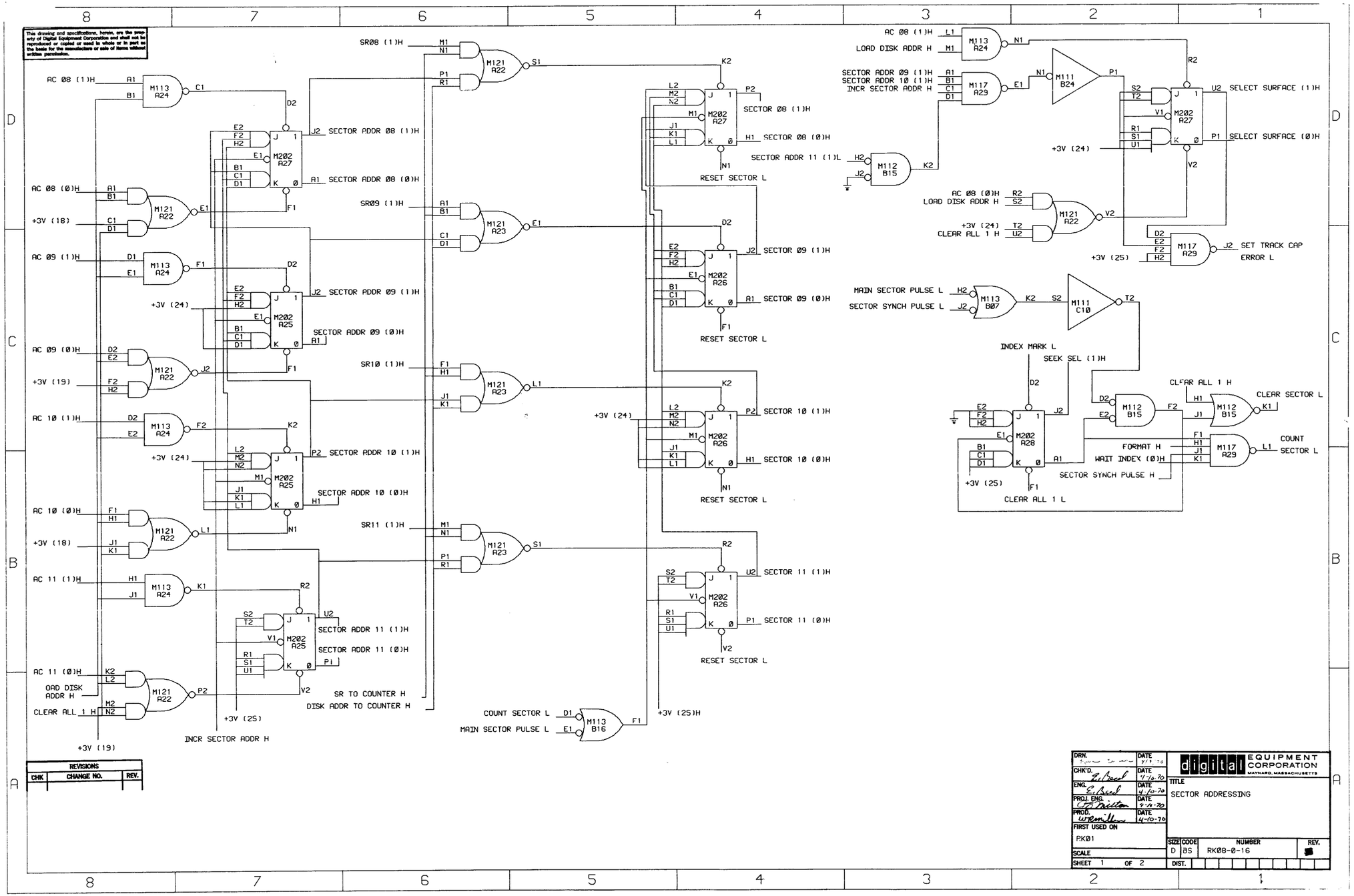

Figure II-27 Sector Addressing Block Schematic Diagram
(Sheet 1 of 2)

This drawing and specifications, herein, are the property of Digital Equipment Corporation and shall not be reproduced or copied or used in whole or in part as the basis for the manufacture or sale of items without written permission.

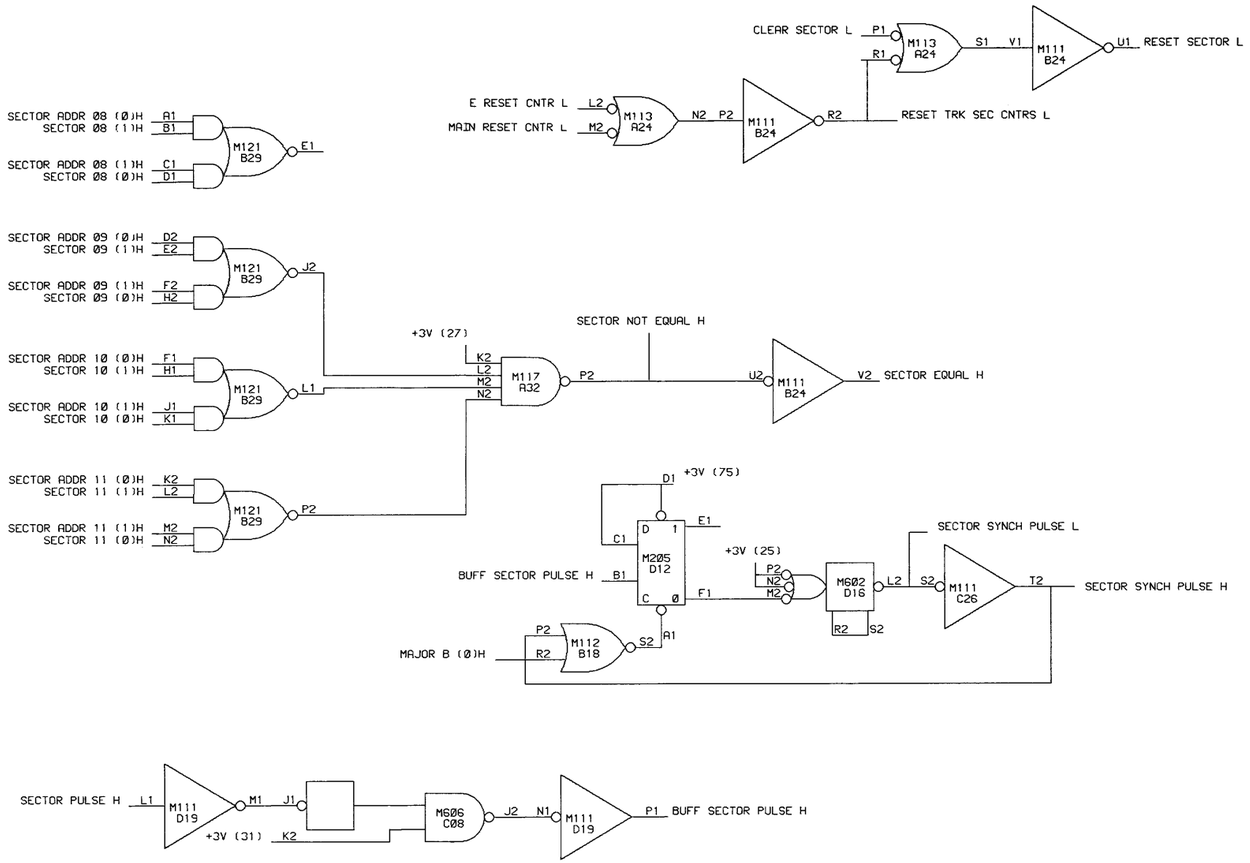

REVISIONS		
CHK	CHANGE NO.	REV.

DRN.	DATE	digital EQUIPMENT CORPORATION MAYNARD, MASSACHUSETTS
CHK'D.	DATE	
ENG.	DATE	TITLE SECTOR ADDRESSING
PROJ. ENG.	DATE	
PROD.	DATE	
FIRST USED ON RK01		SIZE D · CODE BS · NUMBER RK08-0-16 · REV.
SCALE		
SHEET 2 OF 2		DIST.

Figure II-28 Sector Addressing Block Schematic Diagram
(Sheet 2 of 2)

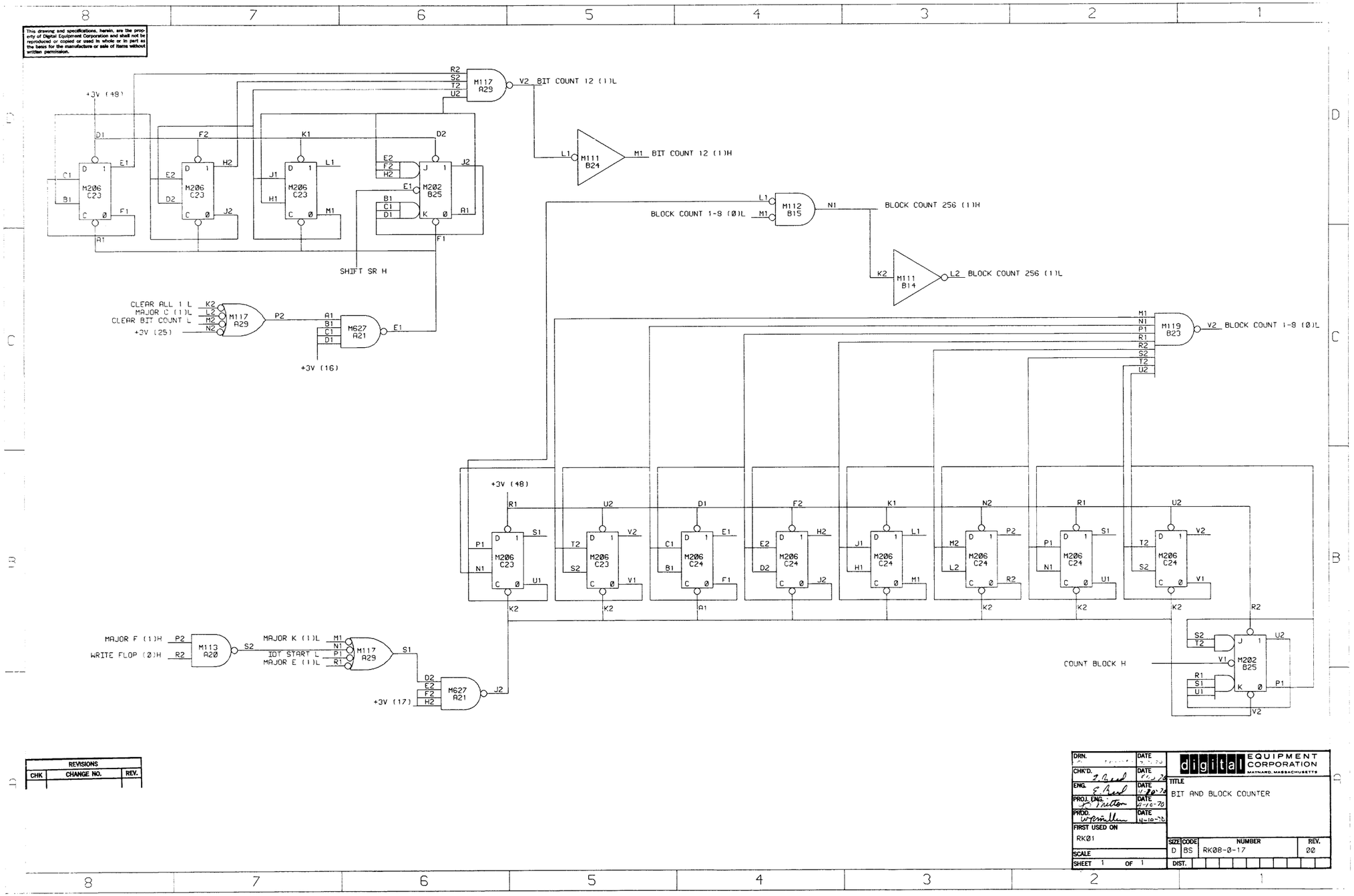

Figure II-29 Bit and Block Counter Block Schematic Diagram

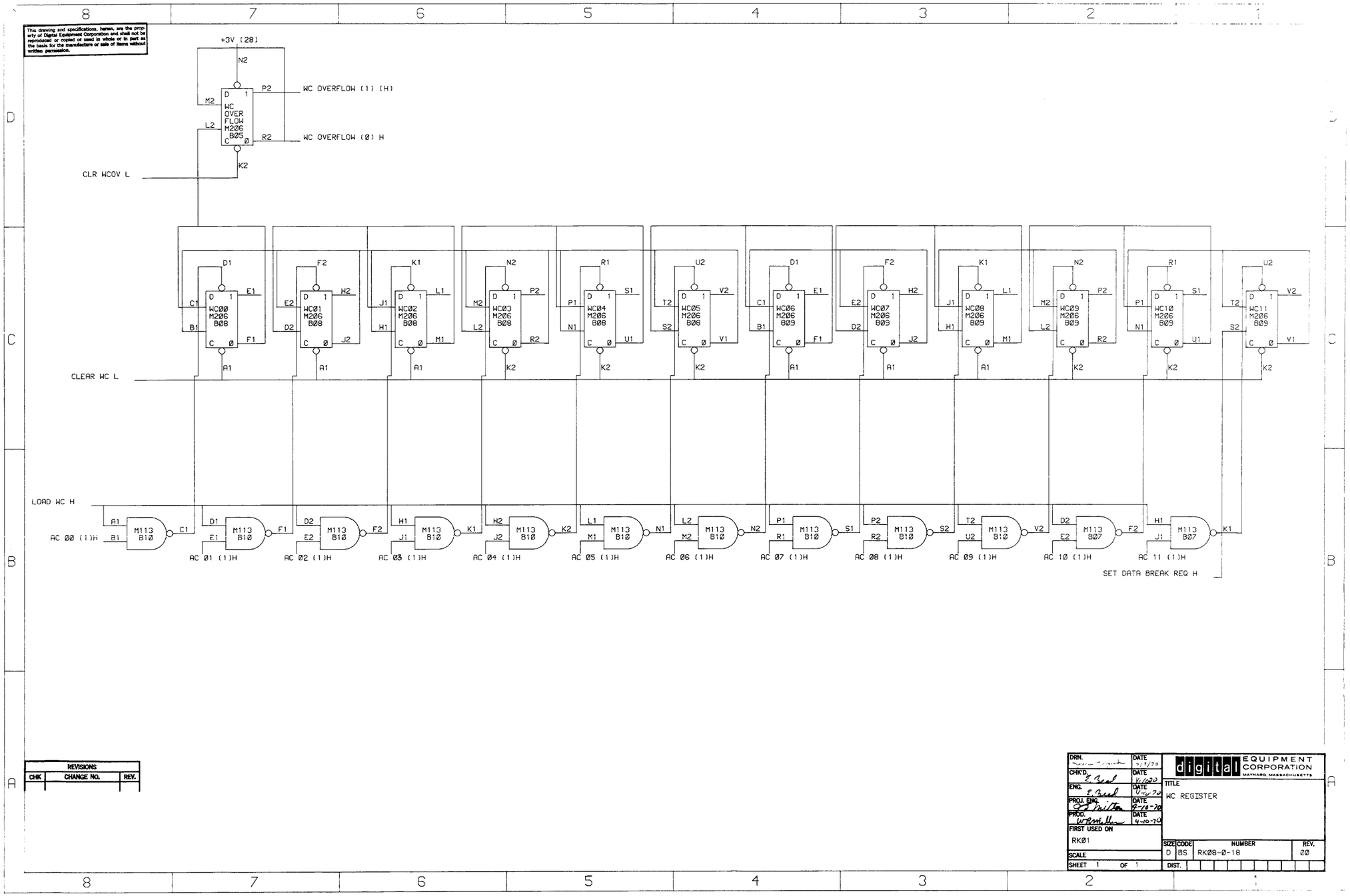

Figure II-30 Word Count (WC) Register Block Schematic Diagram

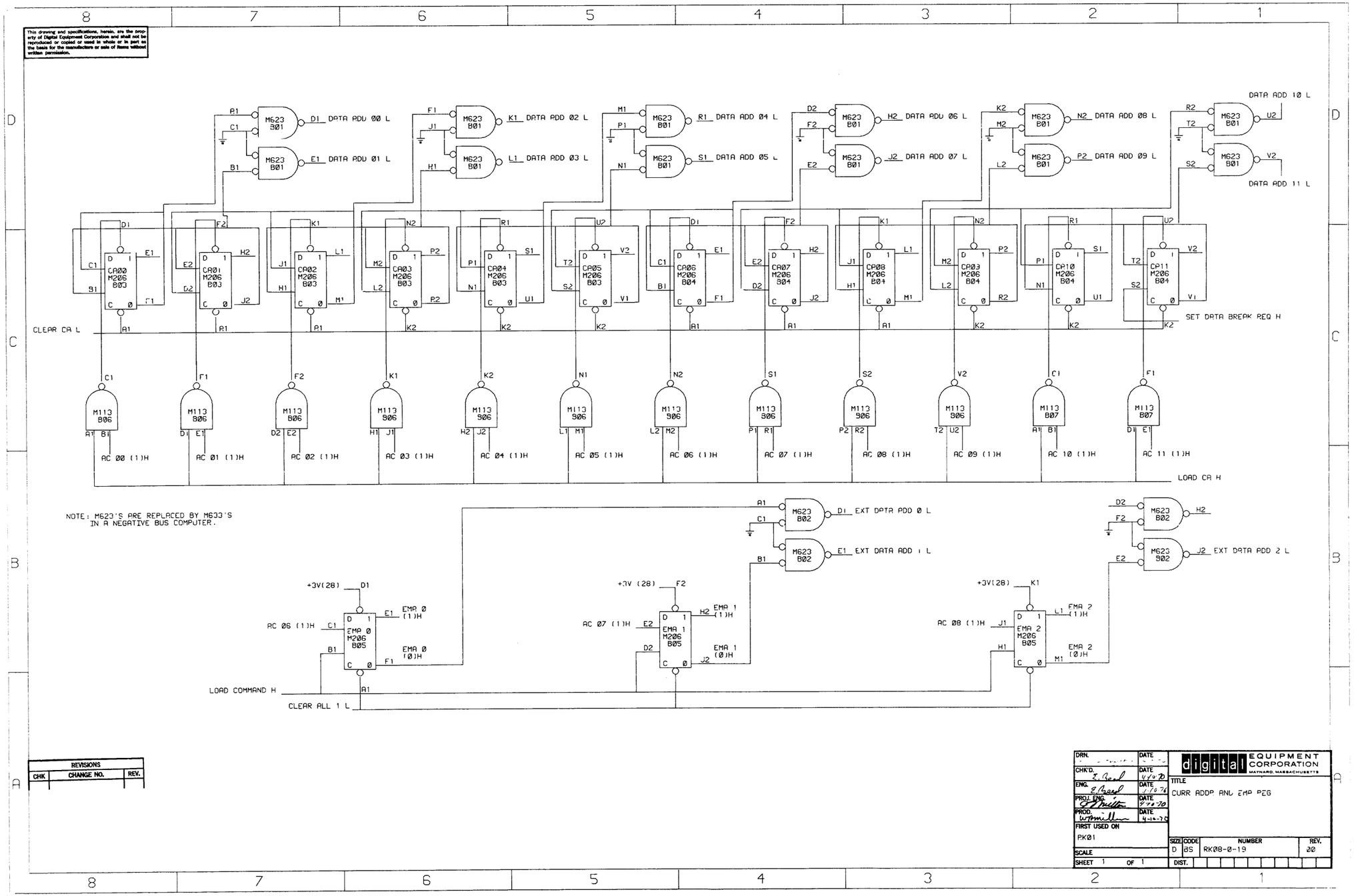

Figure II-31 Current Address and EMA Register Block Schematic Diagram

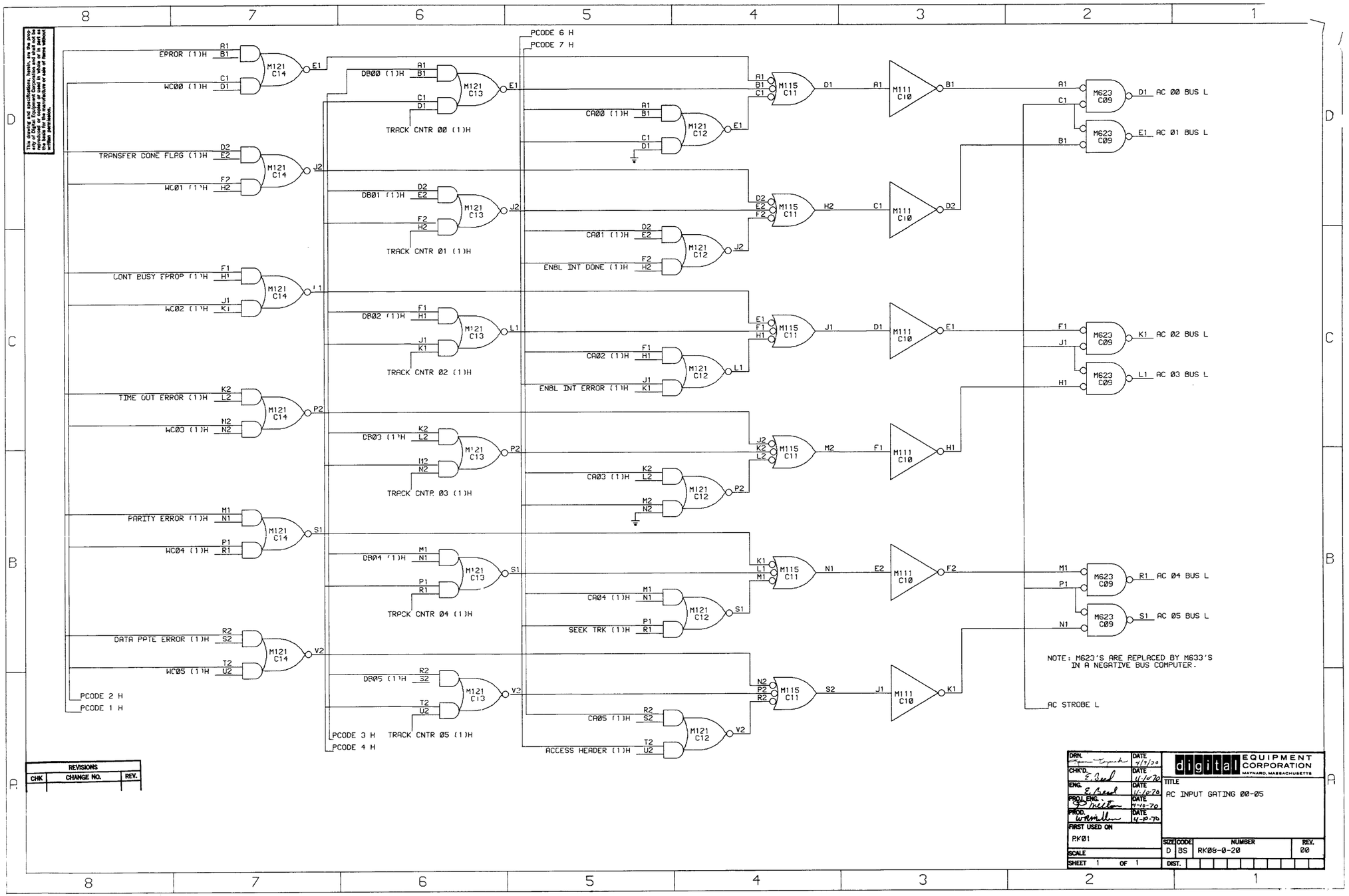

Figure II-32 AC Input Gating 00-05 Block Schematic Diagram

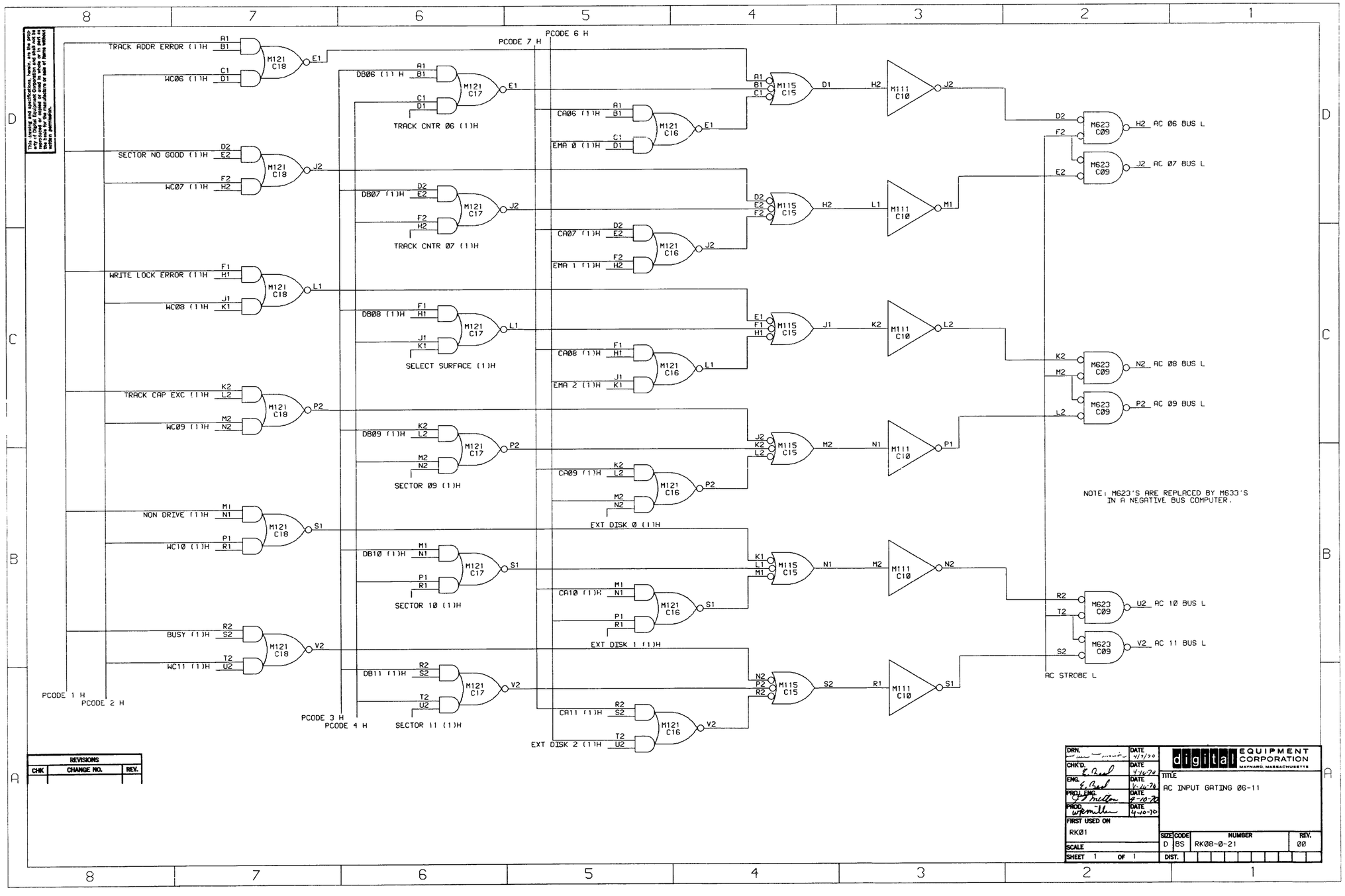

Figure II-33 AC Input Gating 06-11 Block Schematic Diagram

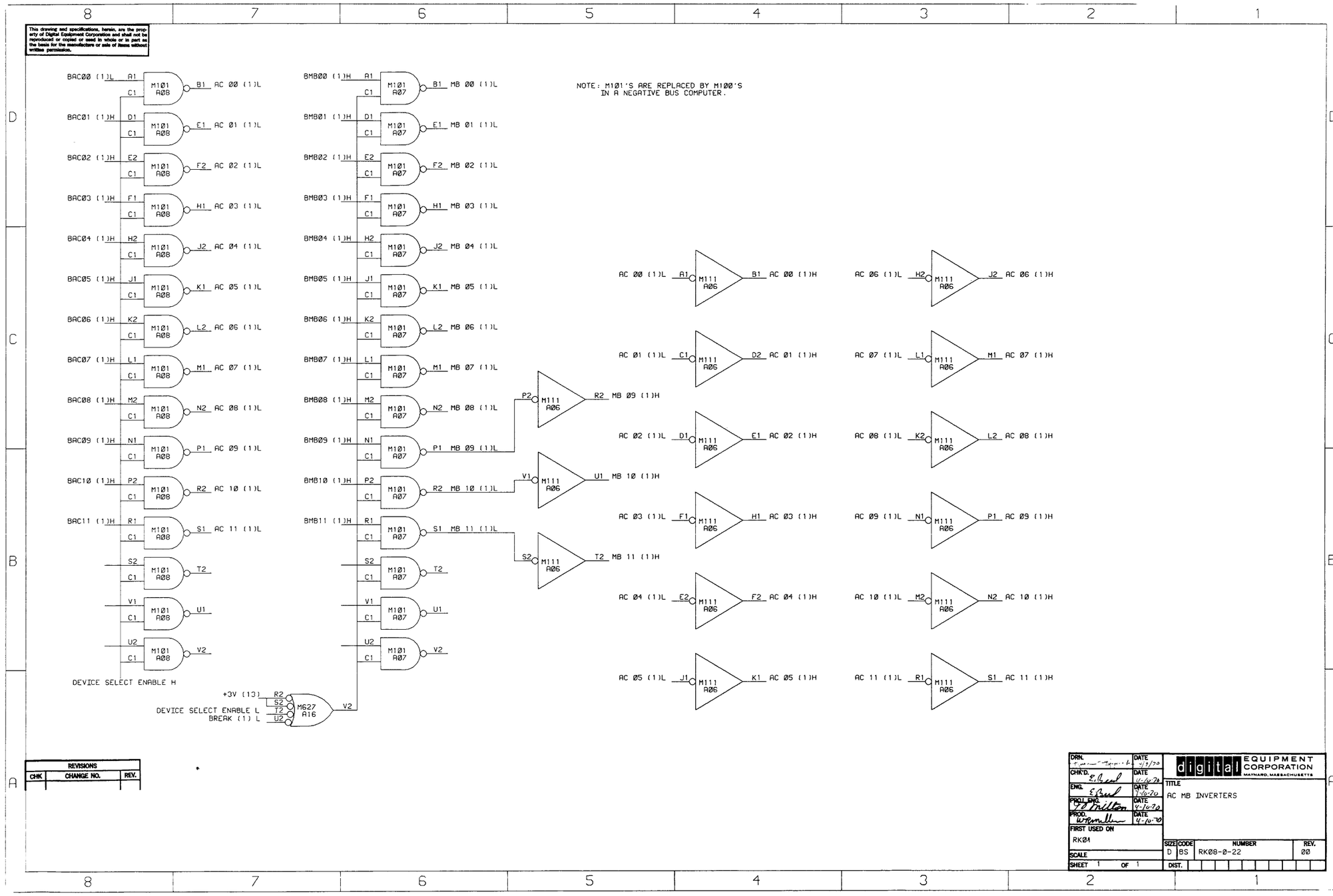

Figure II-34 AC Memory Buffer (MB) Inverters Block Schematic Diagram

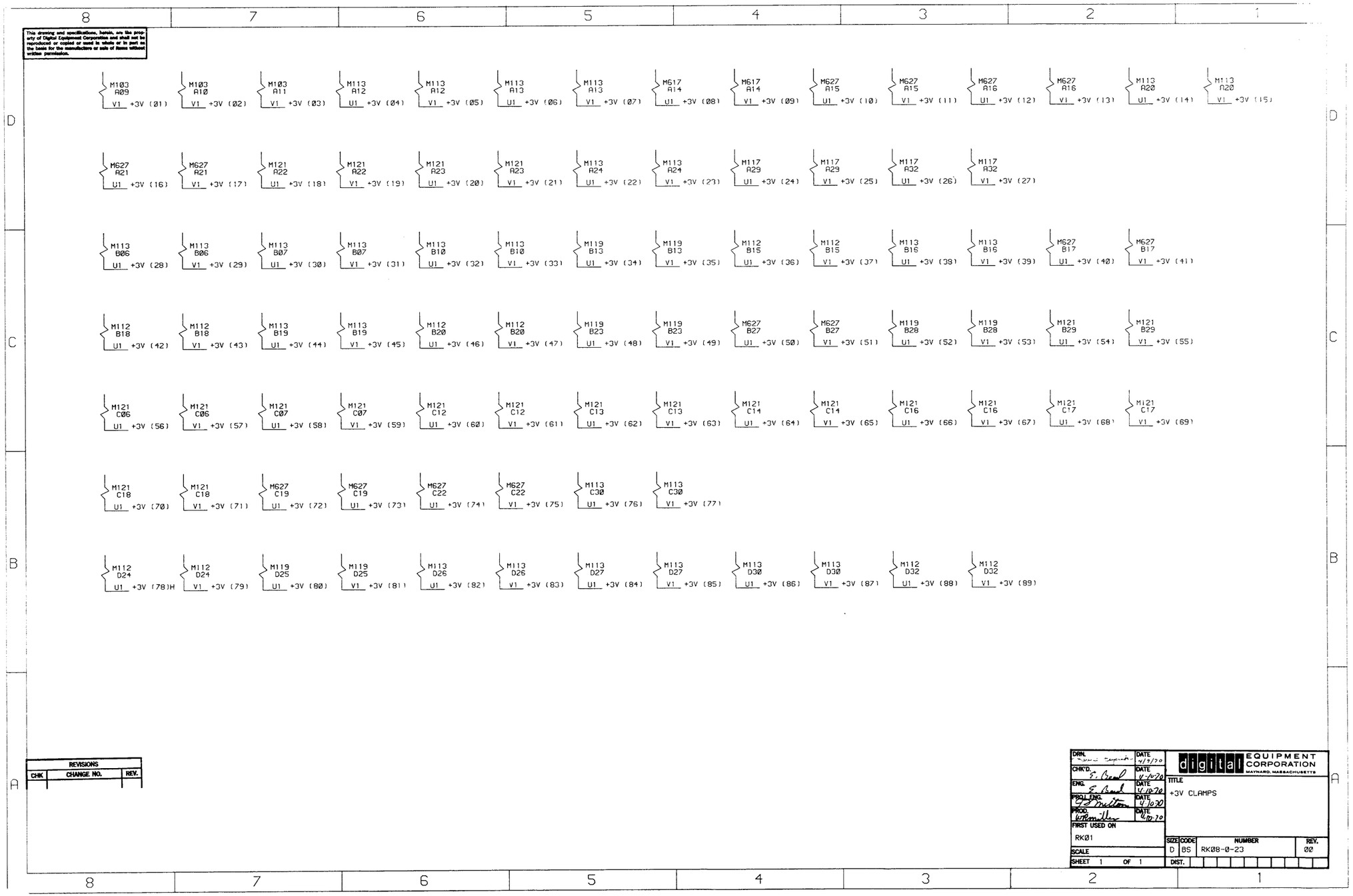

Figure II-35 +3V Clamps Block Schematic Diagram

This drawing and specifications, herein, are the property of Digital Equipment Corporation and shall not be reproduced or copied or used in whole or in part as the basis for the manufacture or sale of items without written permission.

M901
D06

A1	TRACK LOCATED L
B1	NEW SELECT (1)L
C1	NEW SELECT PULSE L
D1	SECTOR PROTECT SW H
E1	SET TIME OUT ERROR L
F1	SET TRACK FOUND H
H1	PROTECT L
J1	ERASE DELAY L
K1	SECTOR SYNCH DELAY L
L1	ERASE DELAY H
M1	WRITE DATA DELAY H
N1	WRITE DATA DELAY L
P1	FORMAT HEADER DELAY L
R1	READ HEADER DELAY L
S1	READ DATA DELAY L
T1	WRITE CLOCK H
U1	FORMAT DATA DELAY L
V1	WRITE DATA SYNCH DELAY L

M901
D07

A1	AC 00 (1)H
B1	AC 01 (1)H
C1	AC 02 (1)H
D1	AC 03 (1)H
E1	AC 04 (1)H
F1	AC 05 (1)H
H1	AC 06 (1)H
J1	AC 07 (1)H
K1	AC 08 (1)H
L1	AC 09 (1)H
M1	AC 10 (1)H
N1	AC 11 (1)H
P1	CLEAR ALL 2 H
R1	CLEAR ALL 2 L
S1	LOAD DISK ADDR H
T1	LOAD COMMAND H
U1	IOT START L
V1	LOAD DISK ADDR L

M901
D08

A1	TRACK ADDR 00 (1)H
B1	TRACK ADDR 01 (1)H
C1	TRACK 02 (1)H
D1	TRACK ADDR 03 (1)H
E1	TRACK ADDR 04 (1)H
F1	TRACK ADDR 05 (1)H
H1	TRACK ADDR 06 (1)H
J1	TRACK ADDR 07 (1)H
K1	DISK READ CLOCK L
L1	IOT START H
M1	MAJOR C (1)H
N1	MAJOR G (1)H
P1	MAJOR H (1)H
R1	MAJOR K (1)H
S1	IOT CLEAR L
T1	MAJOR B (1)H
U1	MAJOR A (1)H
V1	NEW SELECT (1)H

M901
D06

A2	EXT DISK 0 (1)H
B2	EXT DISK 1 (1)H
C2	EXT DISK 2 (1)H
D2	INDEX PULSE H
E2	SECTOR PULSE H
F2	DISK READ DATA H
H2	SET NON DRIVE ERROR L
J2	TRACK EQUAL L
K2	SR00 (1)H
L2	SR01 (1)H
M2	SR02 (1)H
N2	SR03 (1)H
P2	SR04 (1)H
R2	SR05 (1)H
S2	SR06 (1)H
T2	SR07 (1)H
U2	SR TO COUNTER H
V2	RESET NEW SELECT H

M901
D07

A2	DISK ADDR TO COUNTER H
B2	UNFORMATTED (0)H
C2	MAIN 00 (1)L
D2	LOAD COMMAND L
E2	R/W (0)L
F2	R/W (0)H
H2	SELECT SURFACE (1)H
J2	CHECK SECTOR (1)L
K2	CHECK SECTOR (1)H
L2	DATA OUT (1)L
M2	NORMAL WRITE H
N2	SEEK TRACK (0)H
P2	SEEK TRACK (1)H
R2	UNFORMATTED WRITE L
S2	WRITE ALL L
T2	WRITE ALL H
U2	BUSY (0)L
V2	NORMAL R/W H

M901
D08

A2	TRACK CNTR 00 (1)H
B2	TRACK CNTR 01 (1)H
C2	TRACK CNTR 02 (1)H
D2	TRACK CNTR 03 (1)H
E2	TRACK CNTR 04 (1)H
F2	TRACK CNTR 05 (1)H
H2	TRACK CNTR 06 (1)H
J2	TRACK CNTR 07 (1)H
K2	WRITE CLOCK L
L2	RESET TRK SEC CNTRS L
M2	INH ERROR (1)L
N2	ERASE (1)L
P2	WRITE FLOP (1)H
R2	
S2	INITIALIZE L
T2	
U2	
V2	MAJOR D+E+F+H+I H

REVISIONS		
CHK	CHANGE NO.	REV.

DRN.	DATE 4/7/70	digital EQUIPMENT CORPORATION MAYNARD, MASSACHUSETTS
CHK'D. E. Reed	DATE 4/10/70	TITLE CABLE TO RK01X
ENG. E. Reed	DATE 4/10/70	
PROJ. ENG. J. Miller	DATE 4/10/70	
PROD. W. Mailler	DATE 4/10/70	
FIRST USED ON RK01		
SCALE		SIZE D · CODE BS · NUMBER RK08-0-24 · REV. 00
SHEET 1 OF 1		DIST.

Figure II-36 Cable to RK01-X Block Schematic Diagram

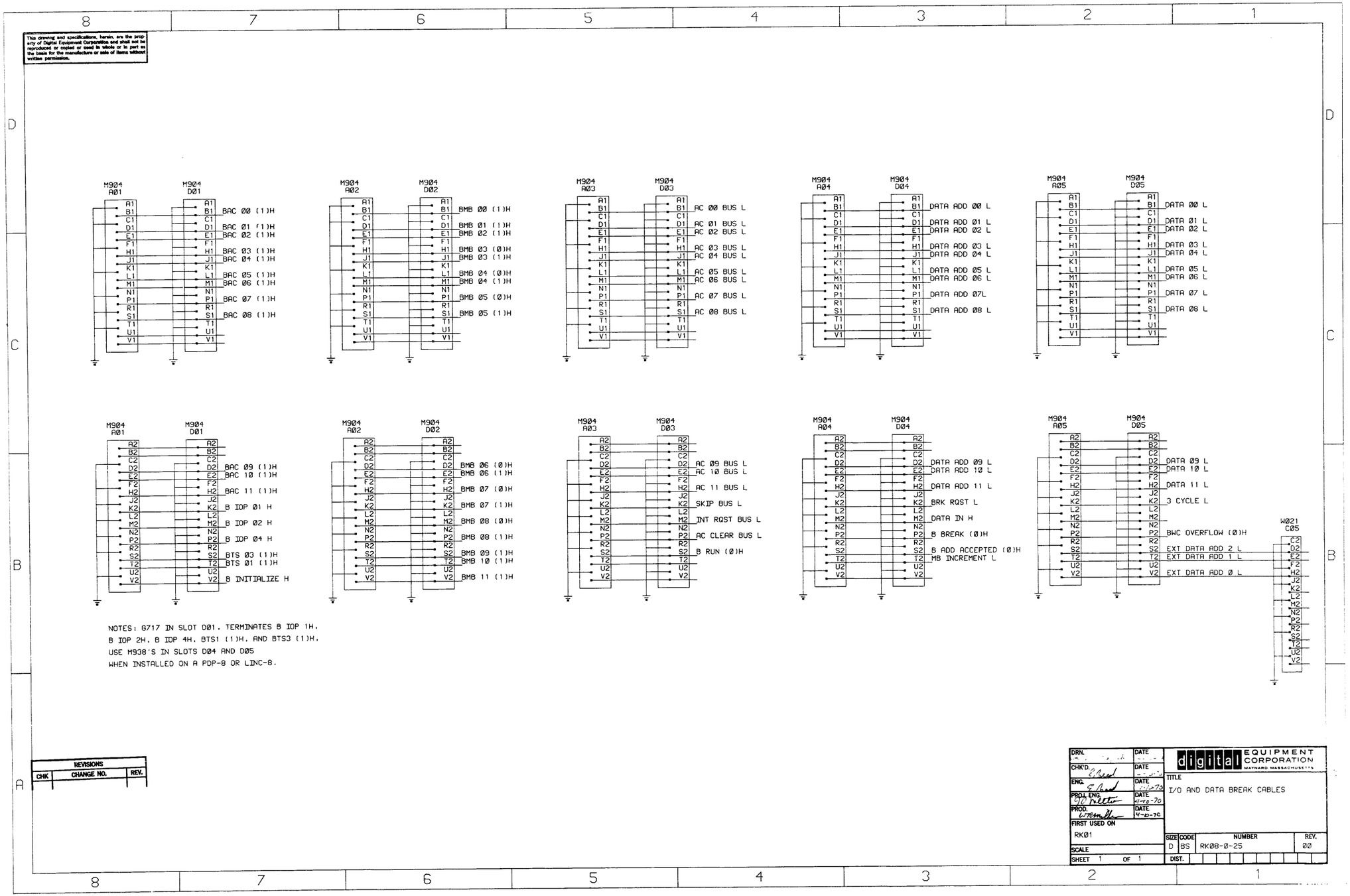

Figure II-37 I/O and Data Break Cables Block Schematic Diagram

This drawing and specifications, herein, are the property of Digital Equipment Corporation and shall not be reproduced or copied or used in whole or in part as the basis for the manufacture or sale of items without written permission.

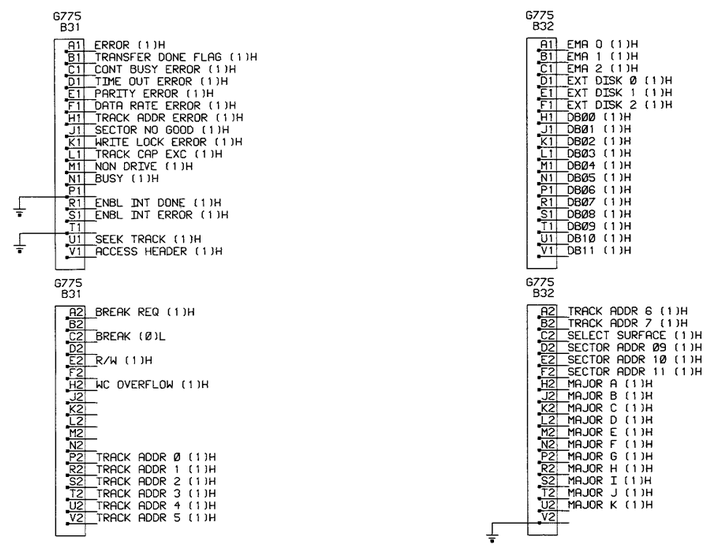

REVISIONS		
CHK	CHANGE NO.	REV.

DRN.	DATE 4/3/70	digital EQUIPMENT CORPORATION MAYNARD, MASSACHUSETTS
CHK'D. F. Reed	DATE 4/10/70	TITLE INDICATOR CABLES
ENG. F. Reed	DATE 4/10/70	
PROJ. ENG. G.P. Miller	DATE 8/10/70	
PROD. W. Kemble	DATE 8/10/70	
FIRST USED ON RK01		SIZE D · CODE BS · NUMBER RK08-0-26 · REV. 00
SCALE		
SHEET 1 OF 1		DIST.

Figure II-38 Indicator Cables Block Schematic Diagram

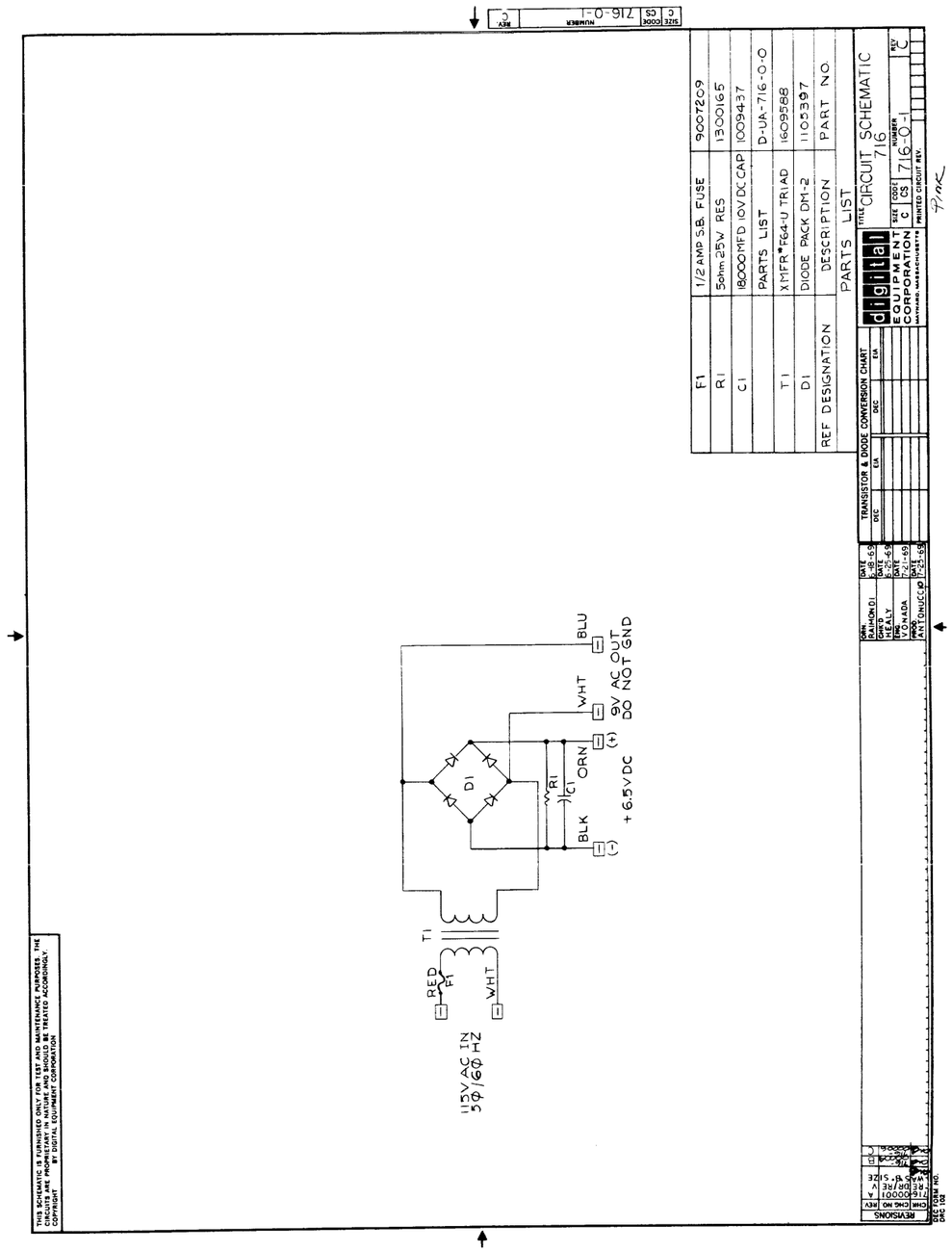

Figure II-39 Type 716 Power Supply Circuit Schematic Diagram

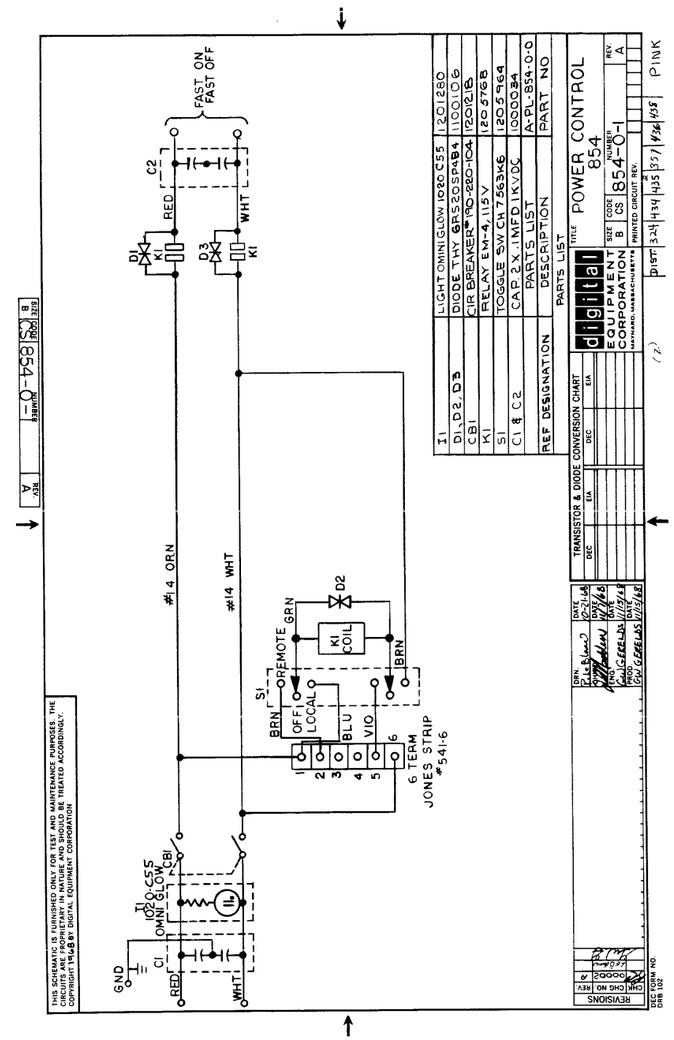

Figure II-40 Type 854 Power Control Panel Wiring Diagram

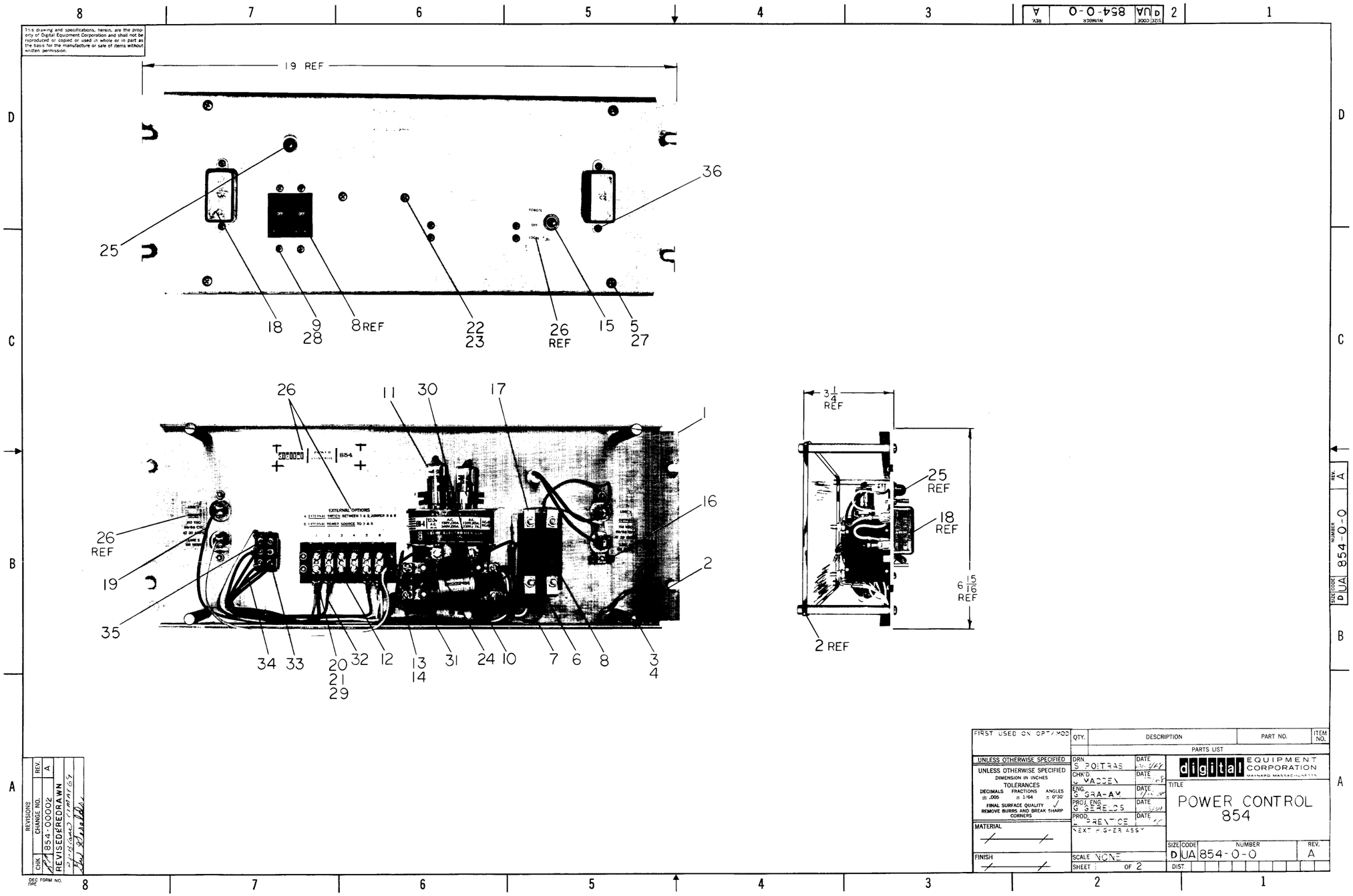

Figure II-41 Type 854 Power Control Panel
Component Pin Location Diagram
(Sheet 1)

This drawing and specifications, herein, are the property of Digital Equipment Corporation and shall not be reproduced or copied or used in whole or in part as the basis for the manufacture or sale of items without written permission

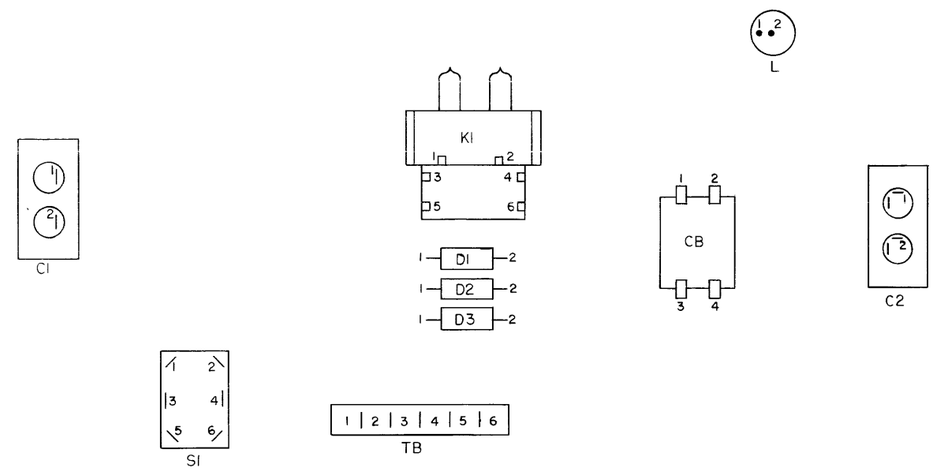

WIRE TABLE

ITEM NO.	DESCRIPTION AWG	DESCRIPTION COLOR	CONNECTIONS FROM	CONNECTIONS TO	EQUIP FROM WITH ITEMS	EQUIP TO WITH ITEMS	REMARKS
19	14	RED	C1-1	K1-5	20	-	
19		RED	CB-2	C2-1	,17	20	
7		WHT	C1-2	K1-3		-	
			S1-1	TB-6		20,29	
			TB-6	K1-4	,21	-	
			CB-3	K1-4	,17	-	
7		WHT	CB-1	C2-2	,17	20	
35		BLU	S1-2	TB-1		20,21	
33		GRN	S1-3	K1-2		24	
33		GRN	S1-4	K1-1		24	
34		VIO	S1-5	TB-5		20,29	
32		BRN	S1-6	TB-2		20,29	
6		ORN	TB-1	K1-6	,29	-	
6	14	ORN	CB-4	K1-6	,17	-	
-	-	RED	C2-1	L-1		-	
-	-	BLK	C2-2	L-2	20	-	
-	-	-	D1-1	K1-1	31	30	
-	-	-	D1-2	K1-2			
-	-	-	D2-1	K1-3			
-	-	-	D2-2	K1-4			
-	-	-	D3-1	K1-5			
-	-	-	D3-2	K1-6	31	30	

QTY.	DESCRIPTION	PART NO.	ITEM NO.

PARTS LIST

FIRST USED ON OPTION/MODEL

DO NOT SCALE DRAWING

UNLESS OTHERWISE SPECIFIED
DIMENSION IN INCHES
TOLERANCES
DECIMALS ± .005 FRACTIONS ± 1/64 ANGLES ± 0°30'
FINAL SURFACE QUALITY
REMOVE BURRS AND BREAK SHARP CORNERS

MATERIAL

FINISH

DRN. S POITRAS DATE 10/23/68
CHK'D. J MADDEN DATE 11/7/68
ENG. G GRAHAM DATE 11/12/68
PROJ. ENG. G GERELDS DATE 11/15/68
PROD. L PRENTICE DATE 11/17/68
NEXT HIGHER ASSY

SCALE NONE
SHEET 2 OF 2

digital EQUIPMENT CORPORATION MAYNARD MASSACHUSETTS

TITLE POWER CONTROL 854

SIZE D CODE UA NUMBER 854-0-0 REV. A
DIST.

REVISIONS REV. CHANGE NO. CHK

DEC FORM NO. DRD 100

Figure II-41 Type 854 Power Control Panel
Component Pin Location Diagram
(Sheet 2)

Figure II-42 Register Indicator Panel Circuit Schematic Diagram

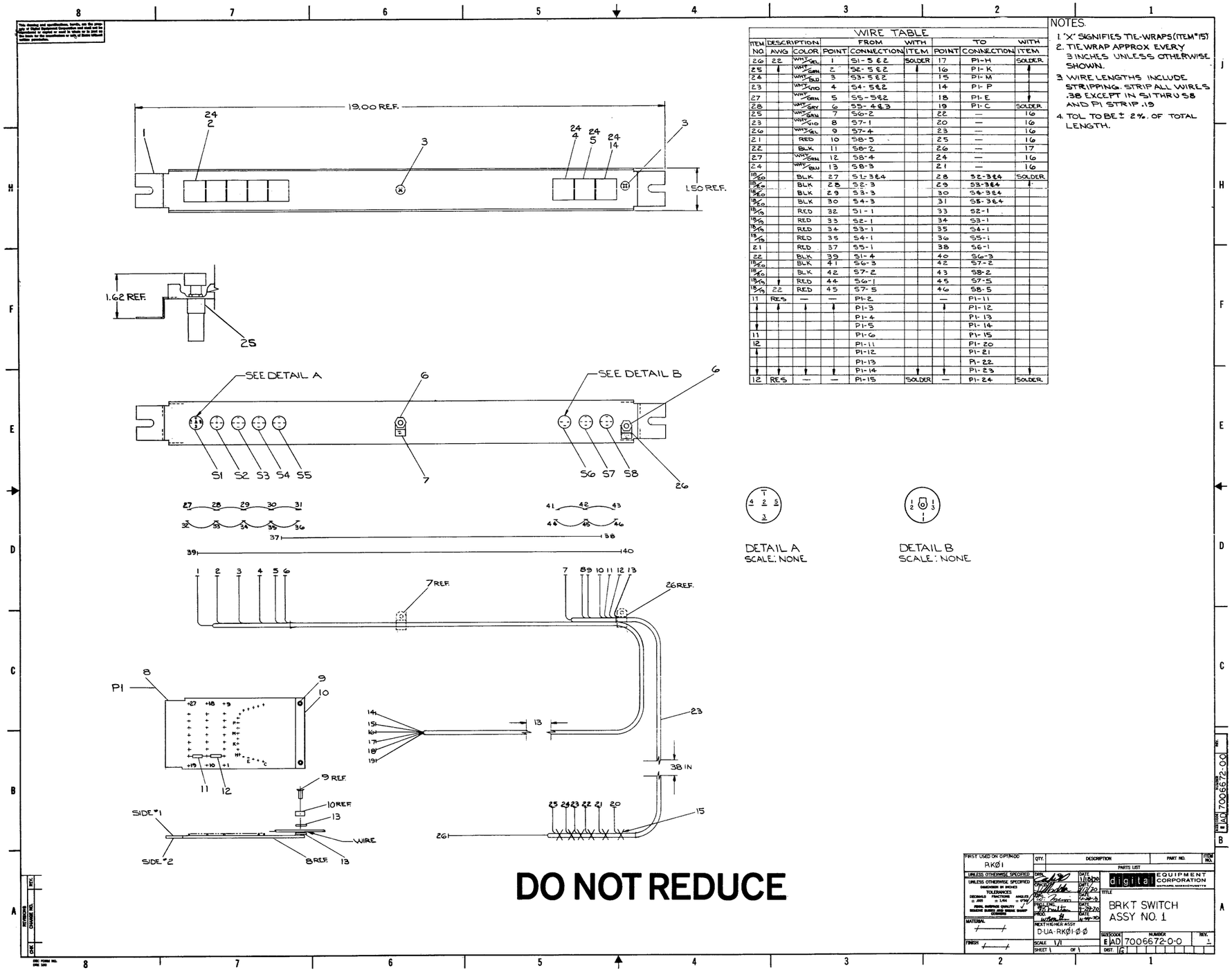

WIRE TABLE

ITEM NO.	DESCRIPTION AWG	COLOR	FROM POINT	FROM CONNECTION	WITH ITEM	TO POINT	TO CONNECTION	WITH ITEM
26	22	WHT/YEL	1	S1-5 & 2	SOLDER	17	P1-H	SOLDER
25		WHT/GRN	2	S2-5 & 2		16	P1-K	
24		WHT/BLD	3	S3-5 & 2		15	P1-M	
23		WHT/VIO	4	S4-5 & 2		14	P1-P	
27		WHT/ORN	5	S5-5 & 2		18	P1-E	
28		WHT/GRY	6	S5-4 & 3		19	P1-C	SOLDER
25		WHT/GRN	7	S6-2		22	—	16
23		WHT/VIO	8	S7-1		20	—	16
26		WHT/YEL	9	S7-4		23	—	16
21		RED	10	S8-5		25	—	16
22		BLK	11	S8-2		26	—	17
27		WHT/ORN	12	S8-4		24	—	16
24		WHT/BLU	13	S8-3		21	—	16
18/20		BLK	27	S1-3 & 4		28	S2-3 & 4	SOLDER
18/20		BLK	28	S2-3		29	S3-3 & 4	
18/20		BLK	29	S3-3		30	S4-3 & 4	
18/20		BLK	30	S4-3		31	S5-3 & 4	
18/19		RED	32	S1-1		33	S2-1	
18/19		RED	33	S2-1		34	S3-1	
18/19		RED	34	S3-1		35	S4-1	
18/19		RED	35	S4-1		36	S5-1	
21		RED	37	S5-1		38	S6-1	
22		BLK	39	S1-4		40	S6-3	
18/20		BLK	41	S6-3		42	S7-2	
18/20		BLK	42	S7-2		43	S8-2	
18/19		RED	44	S6-1		45	S7-5	
18/19	22	RED	45	S7-5		46	S8-5	
11	RES	—	—	P1-2		—	P1-11	
				P1-3			P1-12	
				P1-4			P1-13	
				P1-5			P1-14	
11				P1-6			P1-15	
12				P1-11			P1-20	
				P1-12			P1-21	
				P1-13			P1-22	
				P1-14			P1-23	
12	RES	—	—	P1-15	SOLDER	—	P1-24	SOLDER

NOTES.

1. "X" SIGNIFIES TIE-WRAPS (ITEM #15)
2. TIE WRAP APPROX EVERY 3 INCHES UNLESS OTHERWISE SHOWN.
3. WIRE LENGTHS INCLUDE STRIPPING. STRIP ALL WIRES .38 EXCEPT IN S1 THRU S8 AND P1 STRIP .19
4. TOL TO BE ± 2%, OF TOTAL LENGTH.

Figure II-43 Control Panel Switch Assembly Diagram

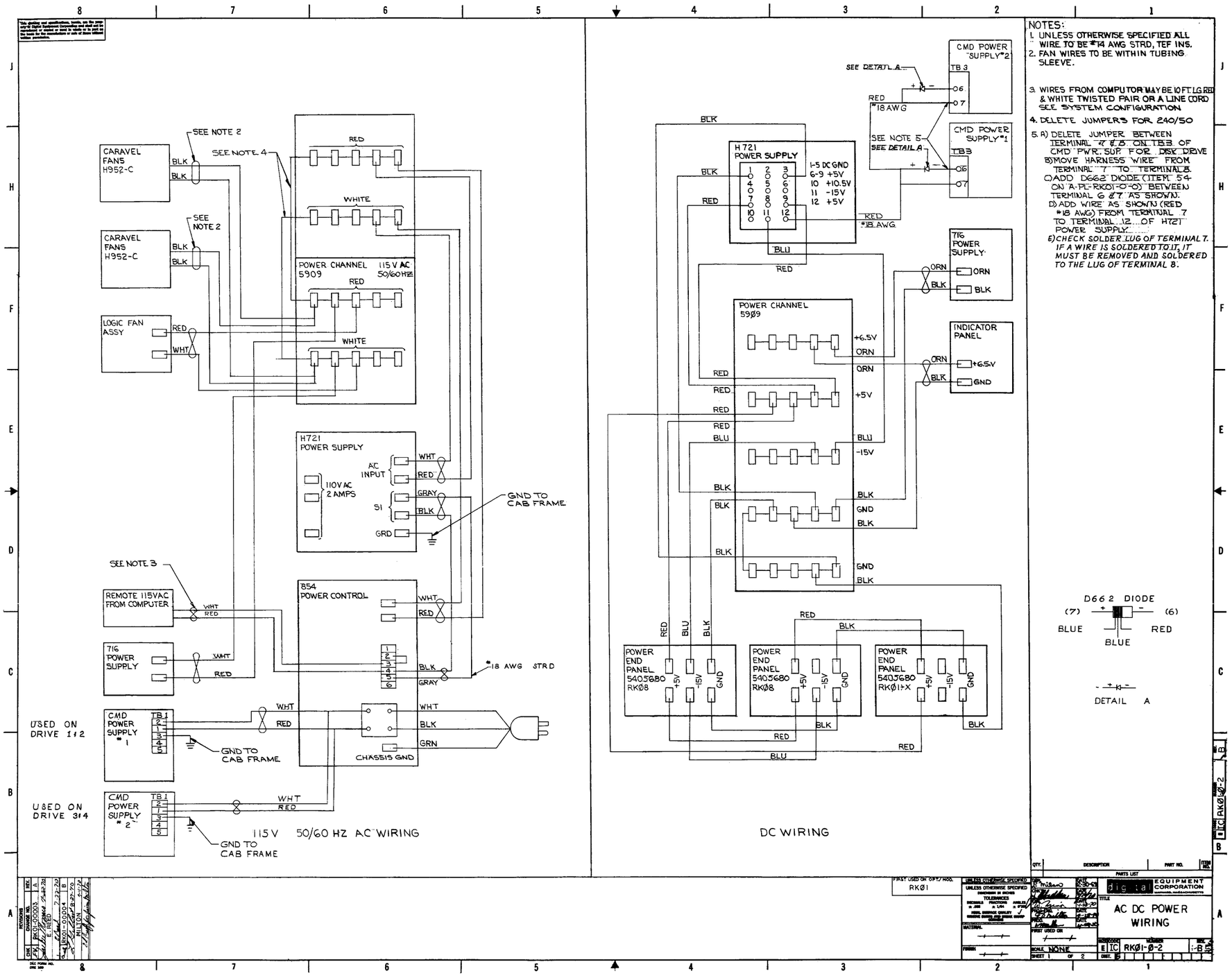

Figure II-44 AC/DC Power Wiring Diagram

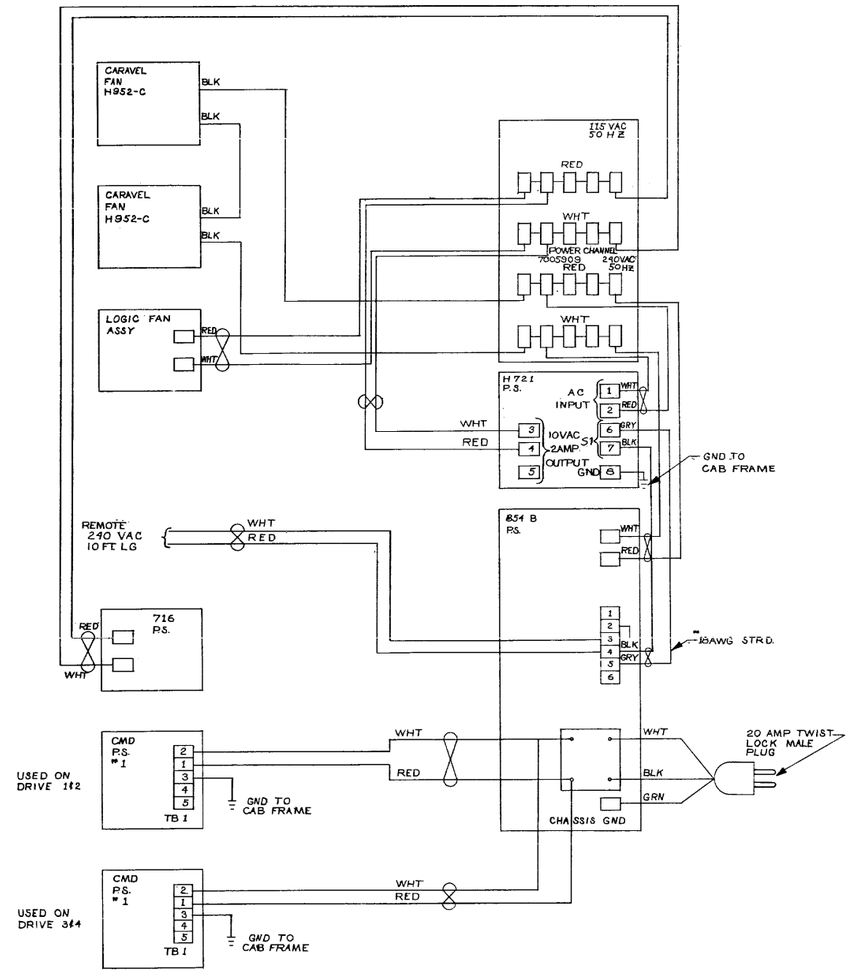

240 V 50 HZ AC WIRING

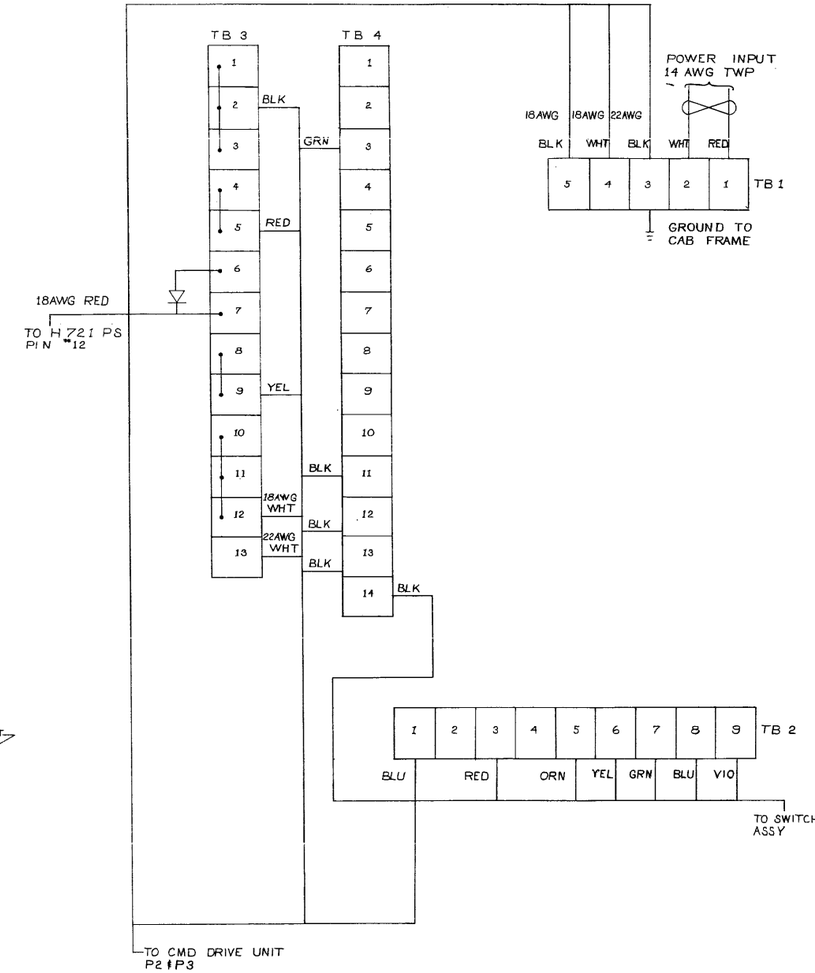

POWER WIRING FOR CMD POWER SUPPLY

QTY.	DESCRIPTION	PART NO.	ITEM NO.
	PARTS LIST		

UNLESS OTHERWISE SPECIFIED
DIMENSIONS IN INCHES
TOLERANCES
DECIMALS ± .005 FRACTIONS ± 1/64 ANGLES ± 1/2°
FINISH: SURFACE QUALITY ✓
REMOVE BURRS AND BREAK SHARP CORNERS
MATERIAL
FINISH

DRN. P. MILAN DATE 12-30-82
CHK'D J. MADDEN DATE 3-22-2a
DRG. W. MINOR DATE 4-28-2a
PROJ. ENG. MILTON DATE 4-28-2a
PROD. MILLER DATE 4-27-2a
FIRST USED ON
SCALE
SHEET 2 OF 2

digital EQUIPMENT CORPORATION
MAYNARD, MASSACHUSETTS

TITLE
AC DC POWER WIRING

SIZE E CODE 1C NUMBER RK01-0-2 REV. B
DIST. G

REVISIONS
REV. CHANGE NO. DATE

PROJECT 1C RK01-0-2 NUMBER REV. B