THIS SCHEMATIC IS FURNISHED ONLY FOR TEST AND MAINTENANCE PURPOSES. THE CIRCUITS ARE PROPRIETARY IN NATURE AND SHOULD BE TREATED ACCORDINGLY.
COPYRIGHT 1967 BY DIGITAL EQUIPMENT CORPORATION

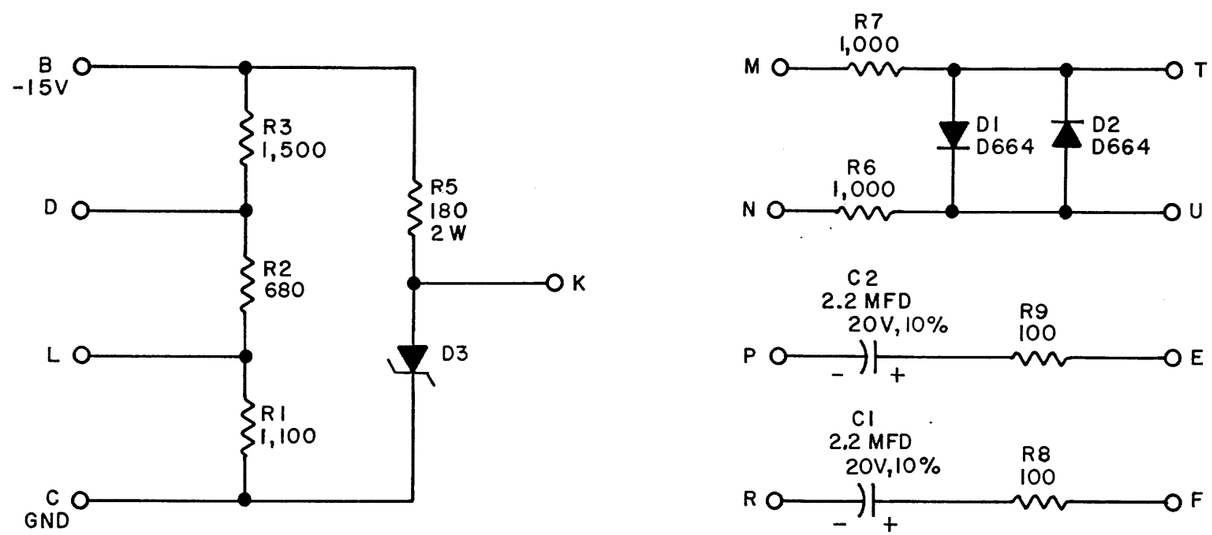

UNLESS OTHERWISE INDICATED:
RESISTORS ARE 1/4 W, 5%
D3= IN758A

TRANSISTOR & DIODE CONVERSION CHART			
DEC	EIA	DEC	EIA
D664	IN3606		
IN758A	SAME		

DRN. M. Waller	DATE 7-5-67	
CHK'D. R. S. C.	DATE 7/7/67	
ENG. Stu Booth	DATE 7/7/67	
PROD.	DATE	

REVISIONS: REV. A; CHG NO. 00001; CHK

digital EQUIPMENT CORPORATION
MAYNARD, MASSACHUSETTS

TITLE MOTION & SELECTION CIRCUIT G853

SIZE	CODE	NUMBER	REV.
B	CS	G853-0-1	A

PRINTED CIRCUIT REV. A

DEC FORM NO. DRB 102

5

DIST 424, 429, 4 13

PINK