THIS SCHEMATIC IS FURNISHED ONLY FOR TEST AND MAINTENANCE PURPOSES. THE CIRCUITS ARE PROPRIETARY IN NATURE AND SHOULD BE TREATED ACCORDINGLY
COPYRIGHT 1970 BY DIGITAL EQUIPMENT CORPORATION

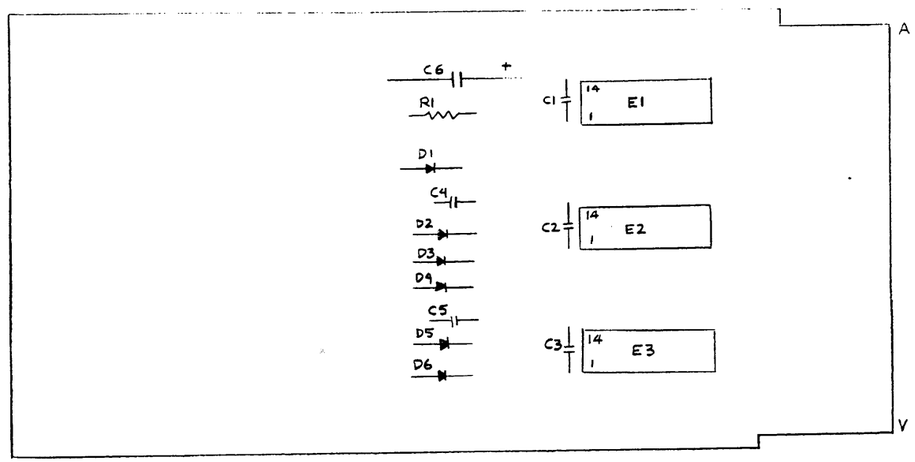

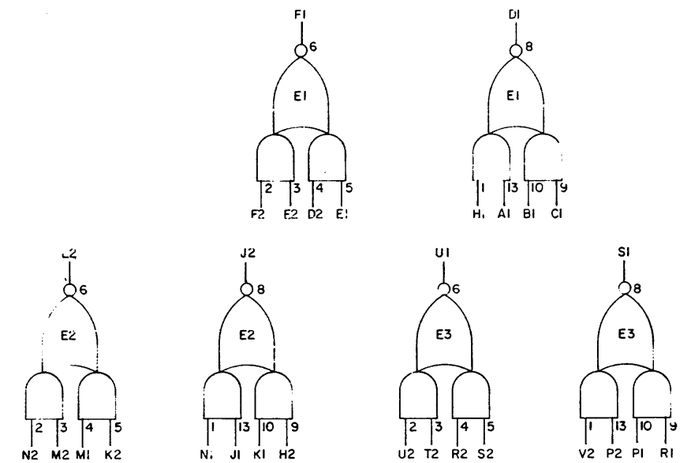

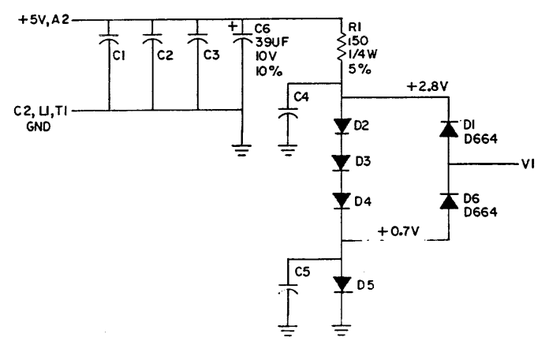

UNLESS OTHERWISE INDICATED:
CAPACITORS = .01UF, 100V, 20%
DIODES = D662
IC'S = DEC1074H50
PIN 7 = GND
PIN 14 = +5V
ON ALL IC'S

ITEM NO.	DEC PART NO.	DESCRIPTION	QTY.
12	9008337-06	HANDLE, FLIP CHIP - MAGENTA	1
11	9006732	EYELET #GS 4-7	2
10	1910812	I.C. DEC 1074H50	3
9	1300250	RES. 150, ¼W, 5%	1
8	1100114	DIODE D664	2
7	1100113	DIODE D662	4
6	1001610	CAP. .01UF, 100V, 20% DISC	5
5	1000076	CAP. 39UF, 10V, 10% S. TANT	1
4	5009295	ETCHED CIRCUIT BOARD	1
3	B-MH-M126-0-6	MODULE ECO HISTORY	
2	C-AH-M126-0-5	ASSY/DRILING HOLE LAYOUT	
1	K-CC-M126-0-4	X-Y COORDINATE HOLE LOCATION	
		PARTS LIST	

REV B
NUMBER M126-0-1
SIZE C CODE CS

REVISIONS
CHK | CHG NO | REV
0000 | B

DRN NANCY MOORE DATE 12/8/70
CHK'D DATE
ENG DATE
PROD DATE

TRANSISTOR & DIODE CONVERSION CHART

DEC	EIA	DEC	EIA
D662	IN645	D664	IN3606

digital EQUIPMENT CORPORATION MAYNARD, MASSACHUSETTS

TITLE SIX 2-2 AND-NOR GATES M126

SIZE	CODE	NUMBER	REV
C	CS	M126-0-1	B

PRINTED CIRCUIT REV B

DEC FORM NO.