THIS SCHEMATIC IS FURNISHED ONLY FOR TEST AND MAINTENANCE PURPOSES. THE CIRCUITS ARE PROPRIETARY IN NATURE AND SHOULD BE TREATED ACCORDINGLY.
COPYRIGHT 1965 BY DIGITAL EQUIPMENT CORPORATION

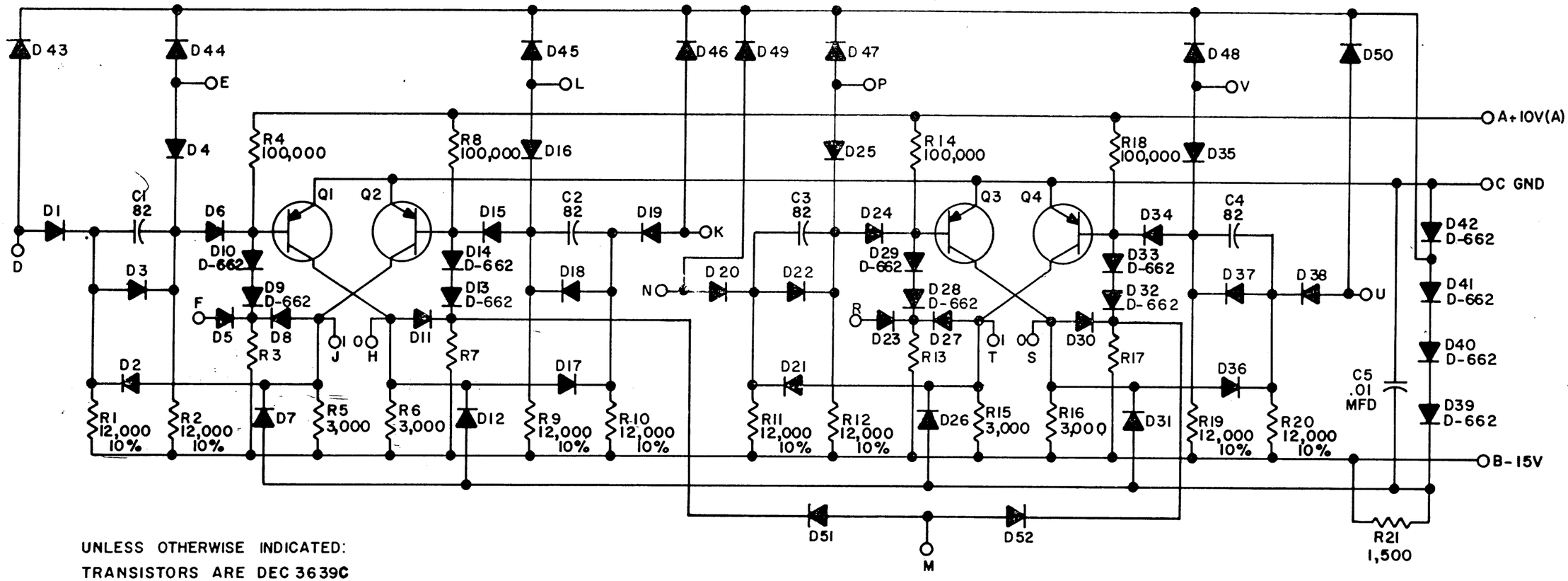

UNLESS OTHERWISE INDICATED:
TRANSISTORS ARE DEC 3639C
RESISTORS ARE 15,000
RESISTORS ARE 1/4W, 5%
CAPACITORS ARE MMFD
DIODES ARE D-664

USE THE ETCH BOARD OF THE R202

REVISIONS			
CHK	CHG NO.	REV.	
DAW	4994	I	
REV	& REDR.		B
	5469		C
	6493		D
	6683		

DRN.	I. HAHN	DATE	6-15-65
CHK'D	R. SIVERMAN	DATE	6-18-65
ENG.	R. SOGGE	DATE	6-18-65
PROD.		DATE	

TRANSISTOR & DIODE CONVERSION CHART

DEC	EIA	DEC	EIA
DEC 3639C	2N3639		
D662	IN645		
D664	IN3606		

digital EQUIPMENT CORPORATION
MAYNARD, MASSACHUSETTS

TITLE
DUAL FLIP-FLOP S202

SIZE	CODE	NUMBER	REV.
B	CS	S202-0-1	D

PRINTED CIRCUIT REV. D E

DEC FORM NO.
DRB 102

SIZE B | CODE CS | S202-0-1 | NUMBER | REV D