This drawing and specifications, herein, are the property of Digital Equipment Corporation and shall not be reproduced or copied or used in whole or in part as the basis for the manufacture or sale of items without written permission.

QTY.	DESCRIPTION	PART NO.	ITEM NO.

PARTS LIST

UNLESS OTHERWISE SPECIFIED
DIMENSION IN INCHES
TOLERANCES
DECIMALS ± .005 FRACTIONS ± 1/64 ANGLES ± 0°30'
FINAL SURFACE QUALITY ✓
REMOVE BURRS AND BREAK SHARP CORNERS

MATERIAL
FINISH

DRN. DATE 9-22-66
CHK'D. DATE
ENG. DATE
PROJ. ENG. DATE
PROD. DATE
FIRST USED ON

digital EQUIPMENT CORPORATION
MAYNARD, MASSACHUSETTS

TITLE
ADDER CONTROL FLIP-FLOPS

SIZE D CODE BS NUMBER AD1 REV. P10
SCALE
SHEET OF
DIST.

REVISIONS

REV.	CHANGE NO.	CHK
P07	WIRE LISTED 2/23	
P08	REVISED 4/11/67	
P09	REVISED 5/5/67	
P10	REVISED 5/25/67	

This drawing and specifications, herein, are the property of Digital Equipment Corporation and shall not be reproduced or copied or used in whole or in part as the basis for the manufacture or sale of items without written permission.

QTY.	DESCRIPTION	PART NO.	ITEM NO.

PARTS LIST

UNLESS OTHERWISE SPECIFIED
DIMENSION IN INCHES
TOLERANCES
DECIMALS ± .005 FRACTIONS ± 1/64 ANGLES ± 0°30'
FINAL SURFACE QUALITY ✓
REMOVE BURRS AND BREAK SHARP CORNERS

MATERIAL

FINISH

DRN. [signature] DATE 3/23/66
CHK'D. DATE
ENG. DATE
PROJ. ENG. DATE
PROD. DATE
FIRST USED ON

digital EQUIPMENT CORPORATION
MAYNARD, MASSACHUSETTS

TITLE

ADDER CONTROL LEVELS

SIZE D | CODE | NUMBER BS- AD2 | REV. P08

SCALE
SHEET OF
DIST.

REVISIONS

CHK	CHANGE NO.	REV.
	WIRE LISTED 2/23	P07
	REVISED 5/25/67	P08

This drawing and specifications, herein, are the property of Digital Equipment Corporation and shall not be reproduced or copied or used in whole or in part as the basis for the manufacture or sale of items without written permission.

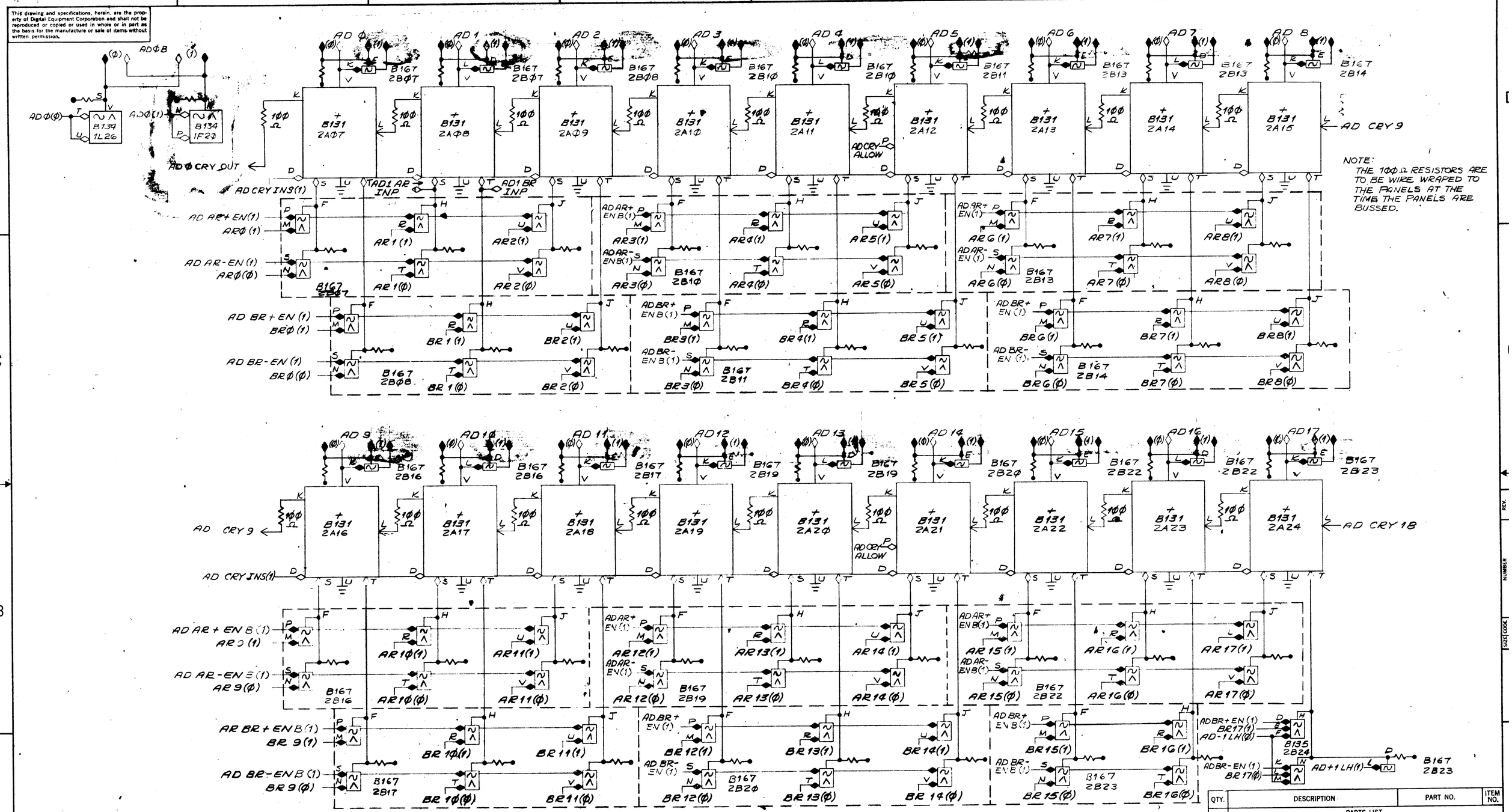

QTY.	DESCRIPTION	PART NO.	ITEM NO.

PARTS LIST

UNLESS OTHERWISE SPECIFIED
UNLESS OTHERWISE SPECIFIED
DIMENSION IN INCHES
TOLERANCES
DECIMALS ± .005 FRACTIONS ± 1/64 ANGLES ± 0 30'
FINAL SURFACE QUALITY ✓
REMOVE BURRS AND BREAK SHARP CORNERS

MATERIAL

FINISH

DRN. Ogura DATE 3/28/66
CHK'D DATE
ENG. DATE
PROJ. ENG. DATE
PROD. DATE

FIRST USED ON

SCALE

SHEET OF

digital EQUIPMENT CORPORATION · MAYNARD MASSACHUSETTS

TITLE ADDER LEFT HALF

SIZE D CODE BS NUMBER AD3 REV. PØ6

DIST.

REVISIONS			
CHK	CHANGE NO.	REV.	
	WIRE LISTED 7/63	FVE	
	REVISED 5/27/66	PØ6	

REV.	NUMBER	SIZE CODE	D

This drawing and specifications, herein, are the property of Digital Equipment Corporation and shall not be reproduced or copied or used in whole or in part as the basis for the manufacture or sale of items without written permission.

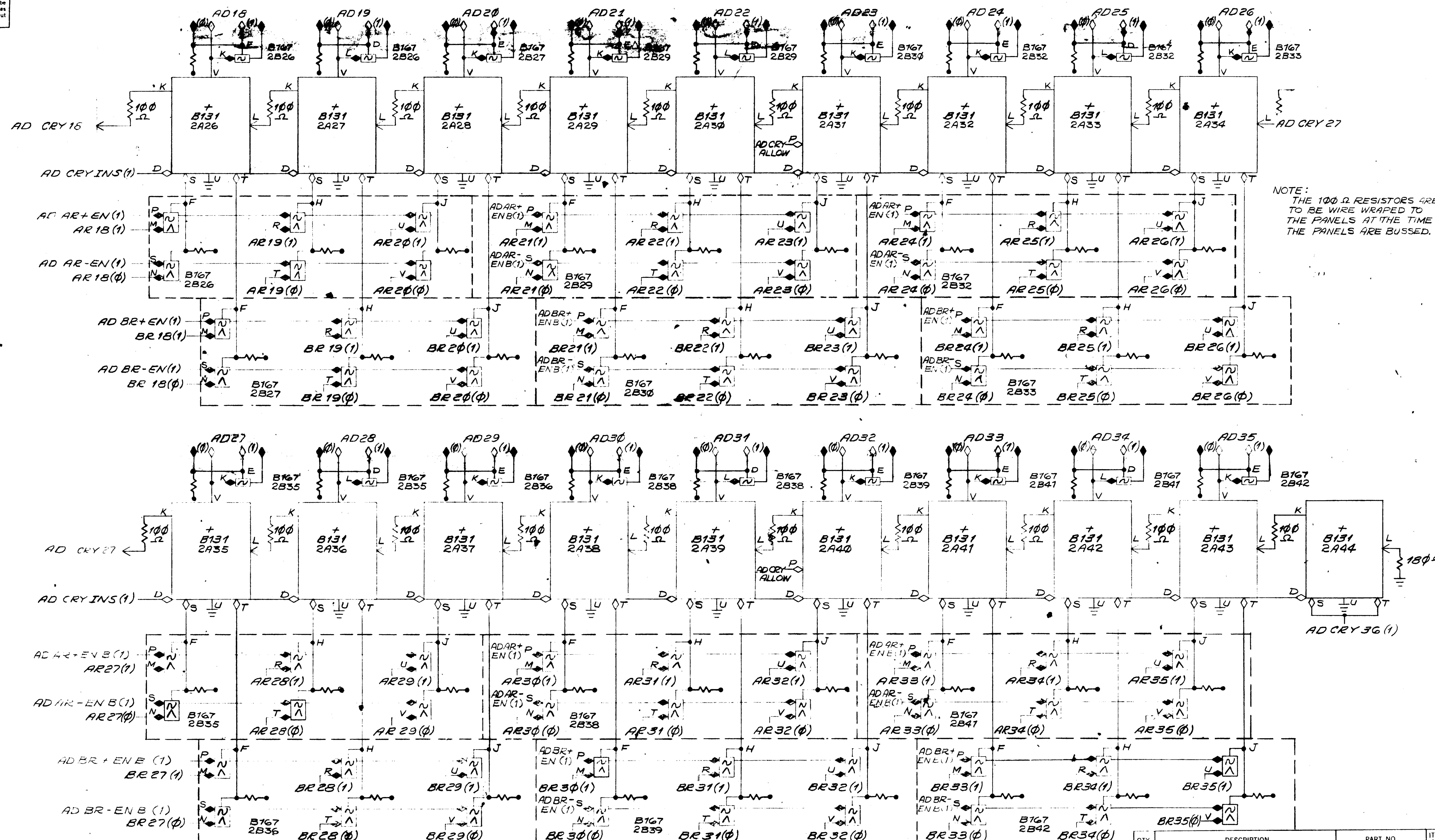

NOTE:
THE 100 Ω RESISTORS ARE TO BE WIRE WRAPED TO THE PANELS AT THE TIME THE PANELS ARE BUSSED.

QTY.	DESCRIPTION	PART NO.	ITEM NO.

PARTS LIST

UNLESS OTHERWISE SPECIFIED
DIMENSION IN INCHES
TOLERANCES
DECIMALS ±.005 FRACTIONS ±1/64 ANGLES ±0°30'
FINAL SURFACE QUALITY ✓
REMOVE BURRS AND BREAK SHARP CORNERS

MATERIAL

FINISH

DRN Salpeen DATE 9/28/6
CHKD DATE
ENG. DATE
PROJ. ENG. DATE
PROD. DATE
FIRST USED ON

SCALE
SHEET OF

digital EQUIPMENT CORPORATION MAYNARD, MASSACHUSETTS

TITLE
ADDER RIGHT HALF

SIZE D CODE BS NUMBER AD4 REV. PØ5
DIST.

REVISIONS
CHK	CHANGE NO.	REV.
	WIRE LISTED	PØ4
	REVISED 5/6/62	PØ5

This drawing and specifications, herein, are the property of Digital Equipment Corporation and shall not be reproduced or copied or used in whole or in part as the basis for the manufacture or sale of items without written permission.

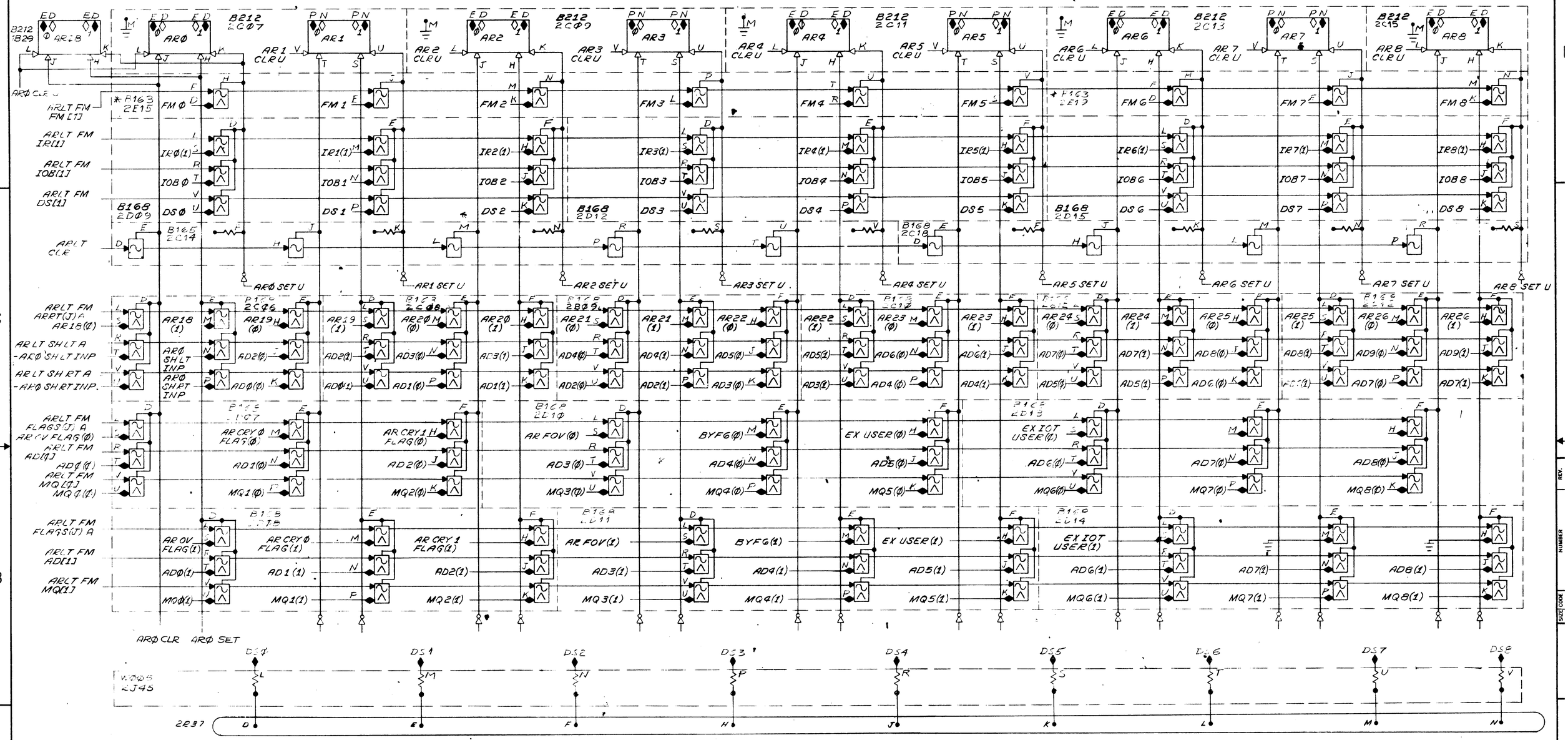

QTY.	DESCRIPTION	PART NO.	ITEM NO.
	PARTS LIST		

UNLESS OTHERWISE SPECIFIED	DRN.	DATE 1 DEC 66	digital EQUIPMENT CORPORATION MAYNARD MASSACHUSETTS
UNLESS OTHERWISE SPECIFIED DIMENSION IN INCHES TOLERANCES DECIMALS ± .005 FRACTIONS ± 1/64 ANGLES ± 0 30' FINAL SURFACE QUALITY REMOVE BURRS AND BREAK SHARP CORNERS	CHK'D	DATE	TITLE AR REGISTER
	ENG.	DATE	
	PROJ. ENG.	DATE	
	PROD.	DATE	
MATERIAL	FIRST USED ON		
FINISH	SCALE		SIZE D CODE B8 NUMBER AR1 REV. P09
	SHEET OF		DIST.

REVISIONS

CHK	CHANGE NO.	REV.
		P13

This drawing and specifications, herein, are the property of Digital Equipment Corporation and shall not be reproduced or copied or used in whole or in part as the basis for the manufacture or sale of items without written permission.

NOTES: 1. * MODULES ARE OPTIONAL.
2.

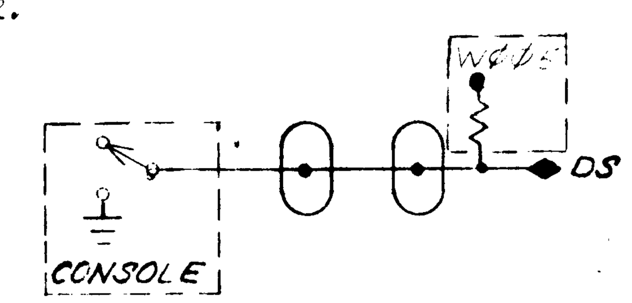

QTY.	DESCRIPTION	PART NO.	ITEM NO.

PARTS LIST

UNLESS OTHERWISE SPECIFIED
DIMENSION IN INCHES
TOLERANCES
DECIMALS ±.005 FRACTIONS ±1/64 ANGLES ±0°30'
FINAL SURFACE QUALITY ✓
REMOVE BURRS AND BREAK SHARP CORNERS

MATERIAL

FINISH

DRN [signature] DATE 12-2-66
CHK'D
ENG.
PROJ. ENG.
PROD.
FIRST USED ON
SCALE
SHEET OF

digital EQUIPMENT CORPORATION
MAYNARD MASSACHUSETTS

TITLE

AR REGISTER

SIZE D CODE BS NUMBER AR2 REV. PΦ9

DIST.

REVISIONS: CHK / CHANGE NO. / REV.

This drawing and specifications, herein, are the property of Digital Equipment Corporation and shall not be reproduced or copied or used in whole or in part as the basis for the manufacture or sale of items without written permission.

QTY.	DESCRIPTION	PART NO.	ITEM NO.

PARTS LIST

UNLESS OTHERWISE SPECIFIED
DIMENSION IN INCHES
TOLERANCES
DECIMALS ±.005 FRACTIONS ± 1/64 ANGLES ± 0°30'
FINAL SURFACE QUALITY √
REMOVE BURRS AND BREAK SHARP CORNERS

MATERIAL

FINISH

DRN. DATE 5 DEC 66
CHK'D DATE
ENG. DATE
PROJ. ENG. DATE
PROD. DATE
FIRST USED ON
SCALE
SHEET OF

digital EQUIPMENT CORPORATION
MAYNARD MASSACHUSETTS

TITLE
AR REGISTER

SIZE	CODE	NUMBER	REV.
D	BS	AR3	P09

DIST.

REVISIONS: CHK | CHANGE NO. | REV.

This drawing and specifications, herein, are the property of Digital Equipment Corporation and shall not be reproduced or copied or used in whole or in part as the basis for the manufacture or sale of items without written permission.

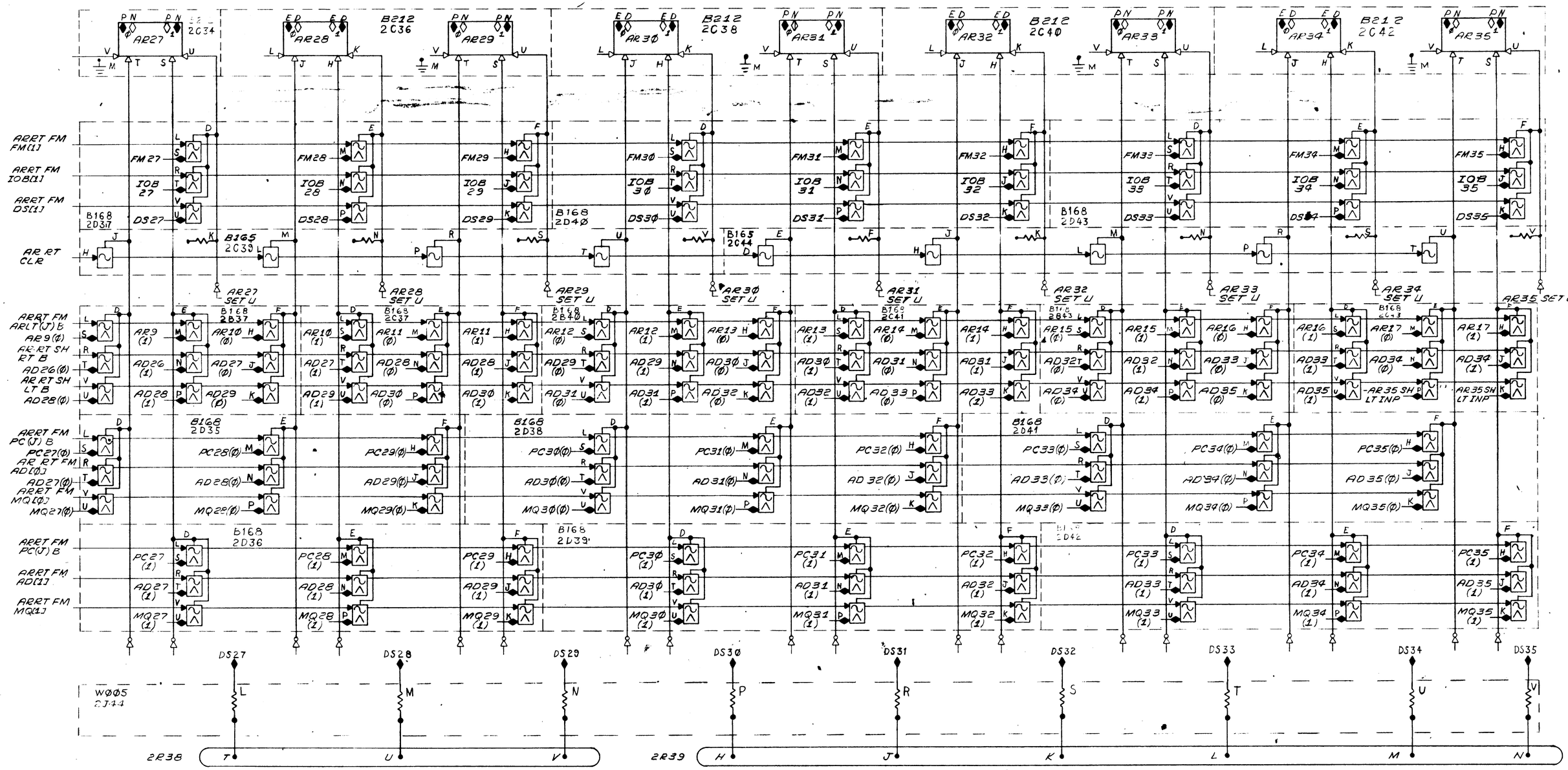

NOTES: 1.

QTY.	DESCRIPTION	PART NO.	ITEM NO.
	PARTS LIST		

UNLESS OTHERWISE SPECIFIED
UNLESS OTHERWISE SPECIFIED
DIMENSION IN INCHES
TOLERANCES
DECIMALS ± .005 FRACTIONS ± 1/64 ANGLES ± 0°30'
FINAL SURFACE QUALITY ✓
REMOVE BURRS AND BREAK SHARP CORNERS

MATERIAL

FINISH

DRN. Garcia	DATE 12-6-66	
CHK'D.	DATE	
ENG.	DATE	
PROJ. ENG.	DATE	
PROD.	DATE	
FIRST USED ON		
SCALE		
SHEET OF		

digital EQUIPMENT CORPORATION MAYNARD MASSACHUSETTS

TITLE AR REGISTER

SIZE	CODE	NUMBER	REV.
D	B5	AR4	PØ9

DIST.

REVISIONS			
REV.	CHANGE NO.		CHK
0			

This drawing and specifications, herein, are the property of Digital Equipment Corporation and shall not be reproduced or copied or used in whole or in part as the basis for the manufacture or sale of items without written permission.

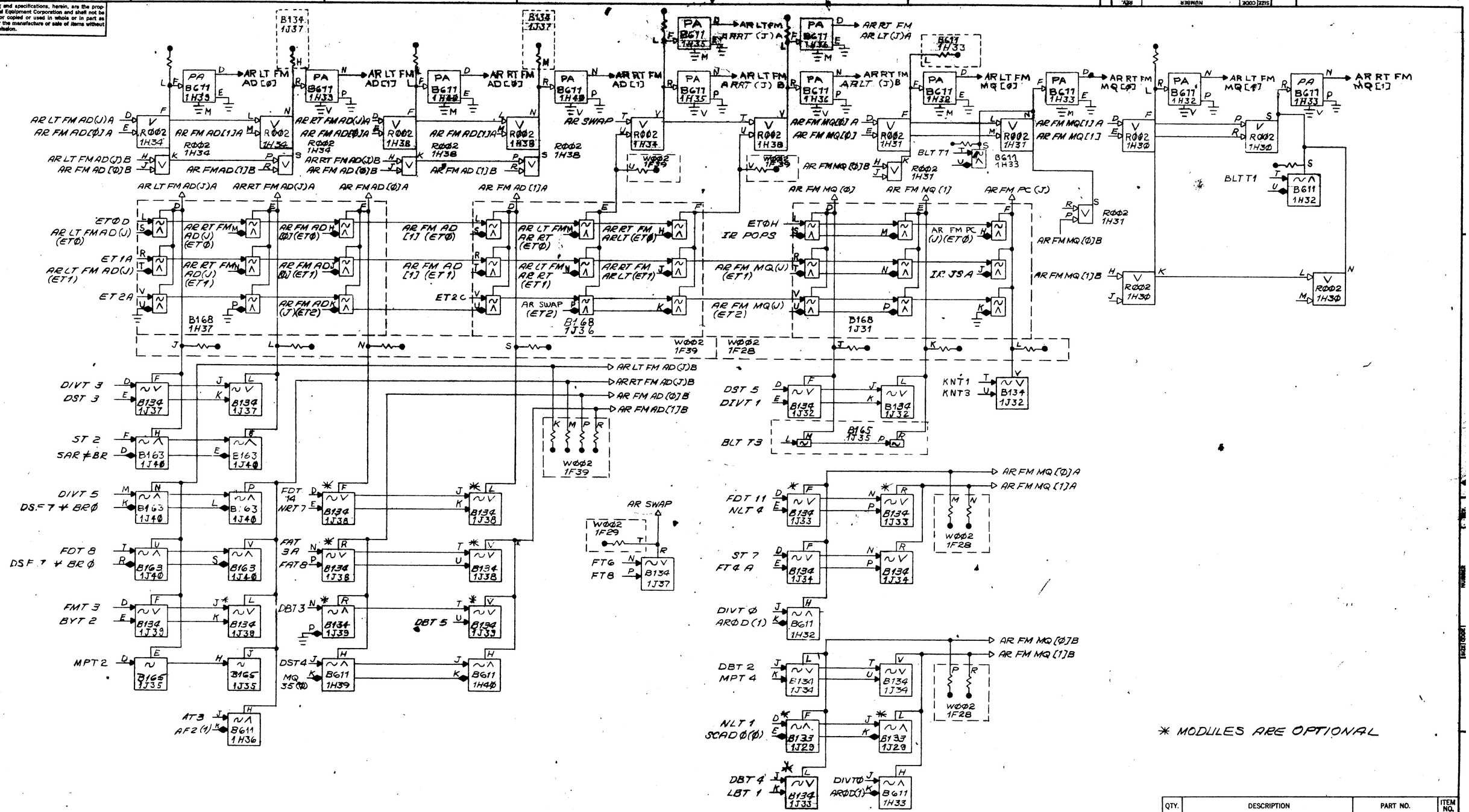

QTY.	DESCRIPTION	PART NO.	ITEM NO.

PARTS LIST

UNLESS OTHERWISE SPECIFIED
UNLESS OTHERWISE SPECIFIED
DIMENSION IN INCHES
TOLERANCES
DECIMALS ± .005 FRACTIONS ± 1/64 ANGLES ± 0°30'
FINAL SURFACE QUALITY ✓
REMOVE BURRS AND BREAK SHARP CORNERS

MATERIAL

FINISH

DRN. DATE 3/13/66
CHK'D. DATE
ENG. DATE
PROJ. ENG. DATE
PROD. DATE

FIRST USED ON

SCALE
SHEET OF

digital EQUIPMENT CORPORATION
MAYNARD, MASSACHUSETTS

TITLE
AR CONTROL PULSES

SIZE D CODE NUMBER AR C-1 REV. A3
DIST.

REVISIONS			
CHK	CHANGE NO.		REV.
	WIRE LISTED 2/23/67		A07
	REVISED 3/17/67		A08

This drawing and specifications, herein, are the property of Digital Equipment Corporation and shall not be reproduced or copied or used in whole or in part as the basis for the manufacture or sale of items without written permission.

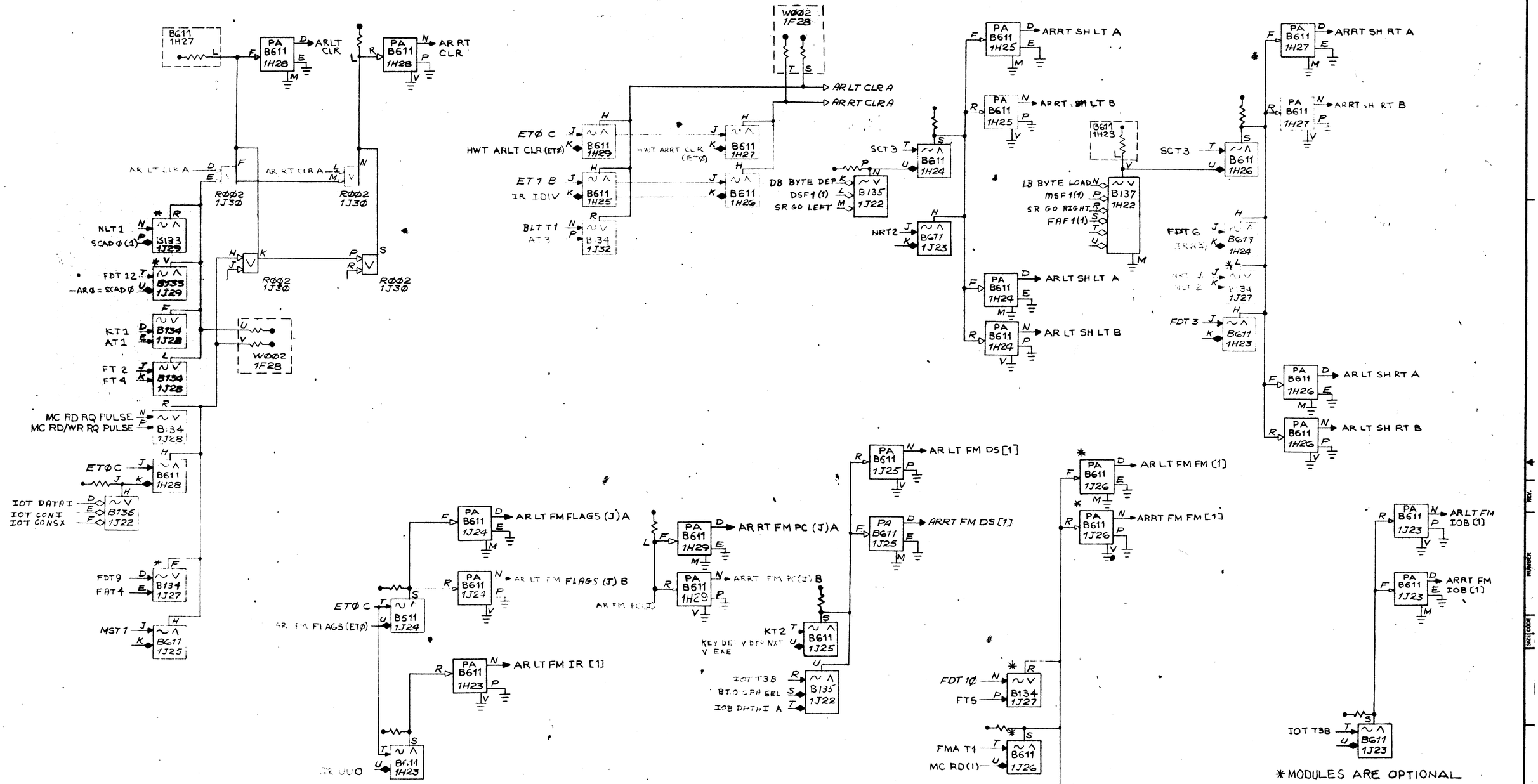

REVISIONS			
CHK.	CHANGE NO.	REV.	
	WIRE LISTED 2/23	P017	
	REVISED 9/21/67	P026	

QTY.	DESCRIPTION	PART NO.	ITEM NO.
	PARTS LIST		

UNLESS OTHERWISE SPECIFIED
UNLESS OTHERWISE SPECIFIED
DIMENSION IN INCHES
TOLERANCES
DECIMALS ± .005 FRACTIONS ± 1/64 ANGLES ± 0°30'
FINAL SURFACE QUALITY ✓
REMOVE BURRS AND BREAK SHARP CORNERS

MATERIAL

FINISH

DRN.	BS	DATE 8/16/66
CHK'D.		DATE
ENG.		DATE
PROJ. ENG.		DATE
PROD.		DATE
FIRST USED ON		
SCALE		
SHEET	OF	

digital EQUIPMENT CORPORATION MAYNARD, MASSACHUSETTS

TITLE AR CONTROL PULSES

SIZE	CODE	NUMBER	REV.
D	BS	ARC 2	P03

DIST.

This drawing and specifications, herein, are the property of Digital Equipment Corporation and shall not be reproduced or copied or used in whole or in part as the basis for the manufacture or sale of items without written permission.

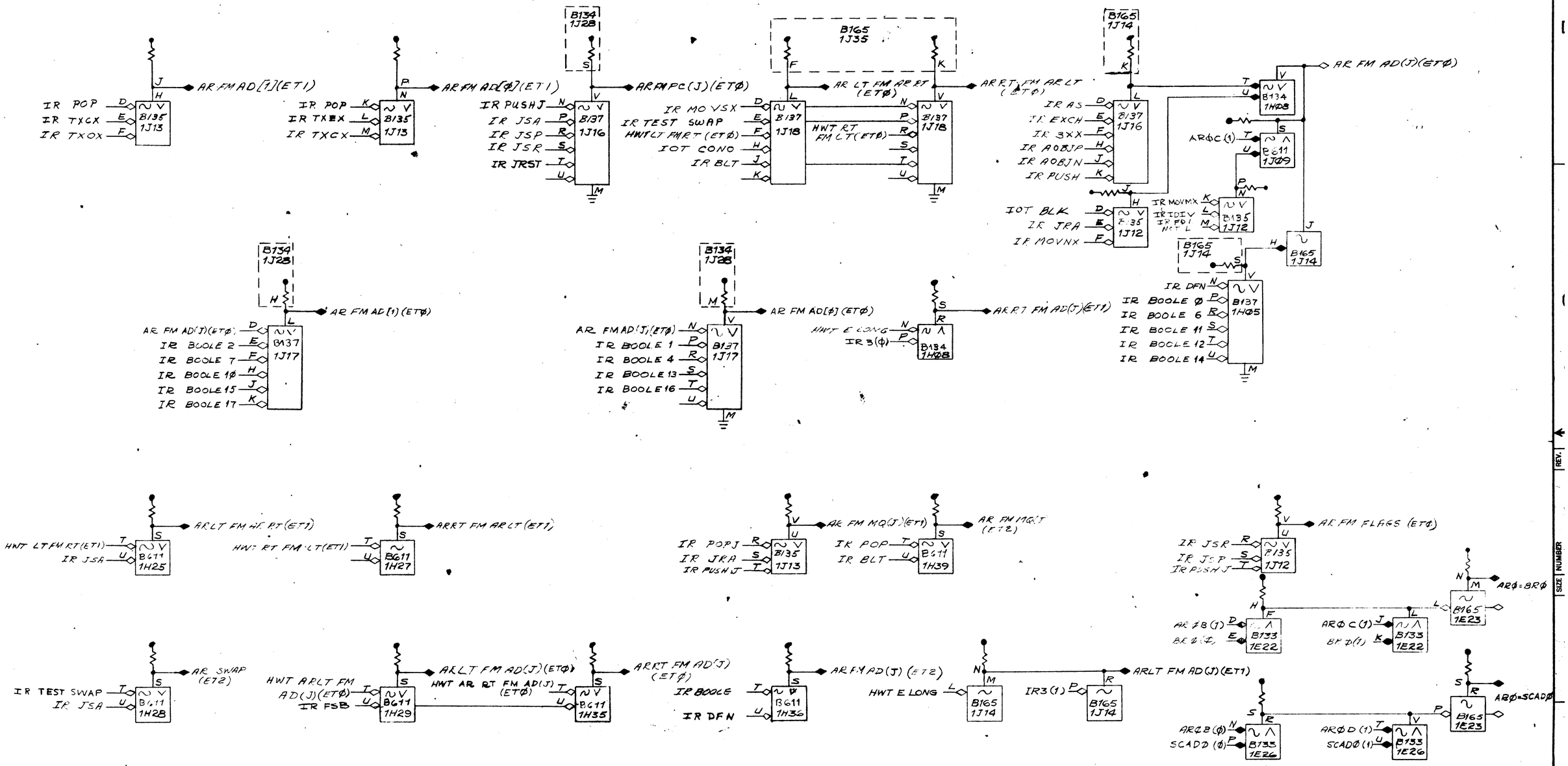

QTY.	DESCRIPTION	PART NO.	ITEM NO.
	PARTS LIST		

DO NOT SCALE DRAWING

UNLESS OTHERWISE SPECIFIED
DIMENSION IN INCHES
TOLERANCES
DECIMALS ± .005 FRACTIONS ± 1/64 ANGLES ± 0°30'
FINAL SURFACE QUALITY
REMOVE BURRS AND BREAK SHARP CORNERS

MATERIAL

FINISH

DRN. GE DATE 12/30/65
CHK'D. DATE
ENG. DATE
PROJ. ENG. DATE
PROD. DATE
FIRST USED ON
SCALE
SHEET OF

digital EQUIPMENT CORPORATION
MAYNARD, MASSACHUSETTS

TITLE AR CONTROL LEVELS

CODE BS SIZE D NUMBER ARC3 REV. PØ3

DIST.

REVISIONS

REV.	CHANGE NO.	CHK
PØ3	WIRE LISTED 2/23	

DEC FORM NO.

This drawing and specifications, herein, are the property of Digital Equipment Corporation and shall not be reproduced or copied or used in whole or in part as the basis for the manufacture or sale of items without written permission.

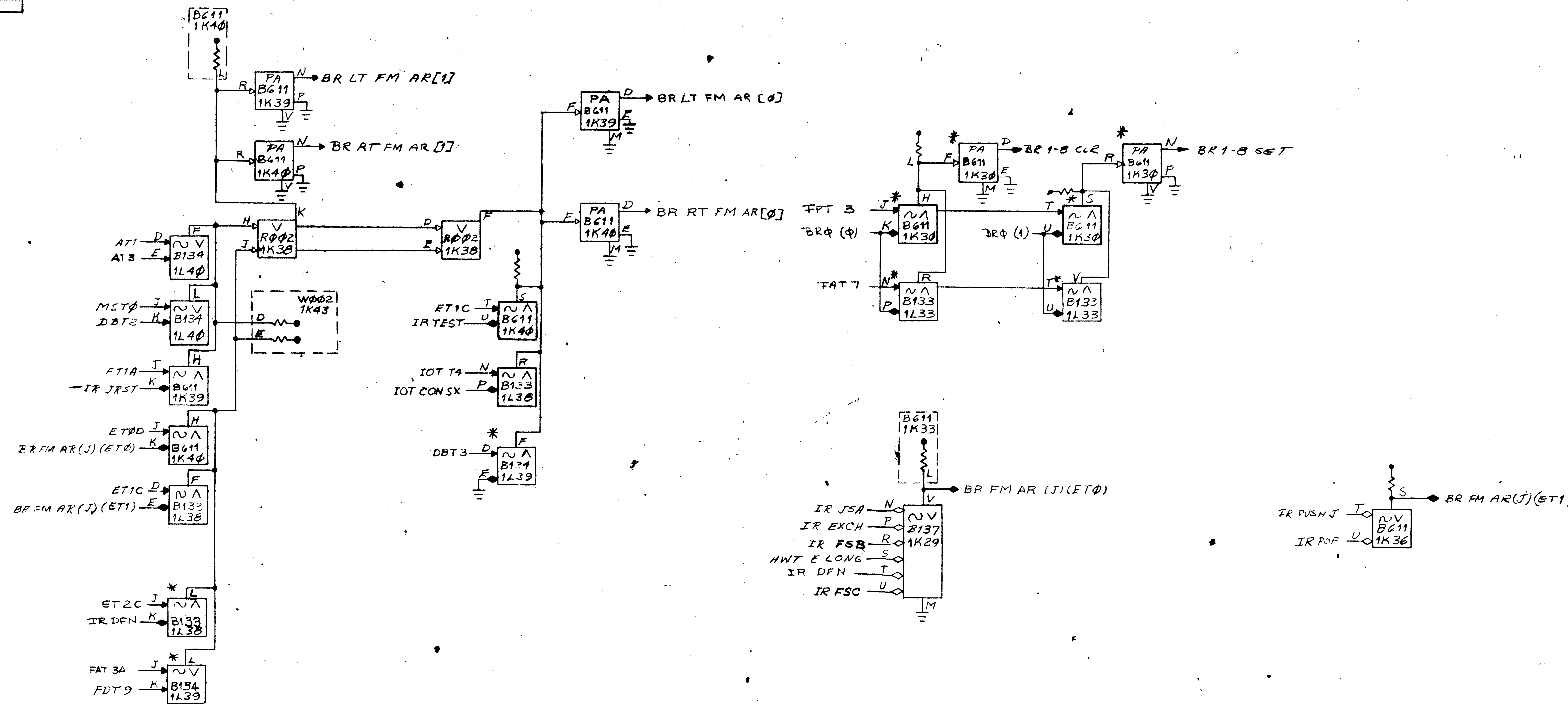

* MODULES ARE OPTIONAL

QTY.	DESCRIPTION	PART NO.	ITEM NO.

PARTS LIST

DO NOT SCALE DRAWING
UNLESS OTHERWISE SPECIFIED
DIMENSION IN INCHES
TOLERANCES
DECIMALS ± .005 FRACTIONS ± 1/64 ANGLES ± 0°30'
FINAL SURFACE QUALITY
REMOVE BURRS AND BREAK SHARP CORNERS
MATERIAL
FINISH

DRN. G E DATE 11/22/65
CHK'D. DATE
ENG. DATE
PROJ. ENG. DATE
PROD. DATE
FIRST USED ON
SCALE
SHEET OF

digital EQUIPMENT CORPORATION MAYNARD, MASSACHUSETTS

TITLE BR CONTROL

CODE BS SIZE D NUMBER BR1 REV. PØ8

REVISIONS

CHK	CHANGE NO.	REV.
	WIRE LISTED 2/23	PØ7
	REVISED 3/23/67	PØ8

DEC FORM NO. DRD 102

This drawing and specifications, herein, are the property of Digital Equipment Corporation and shall not be reproduced or copied or used in whole or in part as the basis for the manufacture or sale of items without written permission.

QTY.	DESCRIPTION	PART NO.	ITEM NO.

PARTS LIST

UNLESS OTHERWISE SPECIFIED
DIMENSION IN INCHES
TOLERANCES
DECIMALS ± .005 FRACTIONS ± 1/64 ANGLES ± 0°30'
FINAL SURFACE QUALITY ✓
REMOVE BURRS AND BREAK SHARP CORNERS

MATERIAL

FINISH

DRN. Joe Apicera DATE 8-1-66
CHK'D. DATE
ENG. DATE
PROJ. ENG. DATE
PROD. DATE
FIRST USED ON

digital EQUIPMENT CORPORATION MAYNARD, MASSACHUSETTS

TITLE
ADDRESS SWITCH COMPARATORS

SIZE D CODE BS NUMBER AS REV. PØ9

SCALE
SHEET OF
DIST.

REVISIONS	CHANGE NO.	REV.
	WIRE LISTED 2/23	PØ7
	REVISED 3/3/67	PØ8
	REVISED 3/22/67	PØ9

This drawing and specifications, herein, are the property of Digital Equipment Corporation and shall not be reproduced or copied or used in whole or in part as the basis for the manufacture or sale of items without written permission.

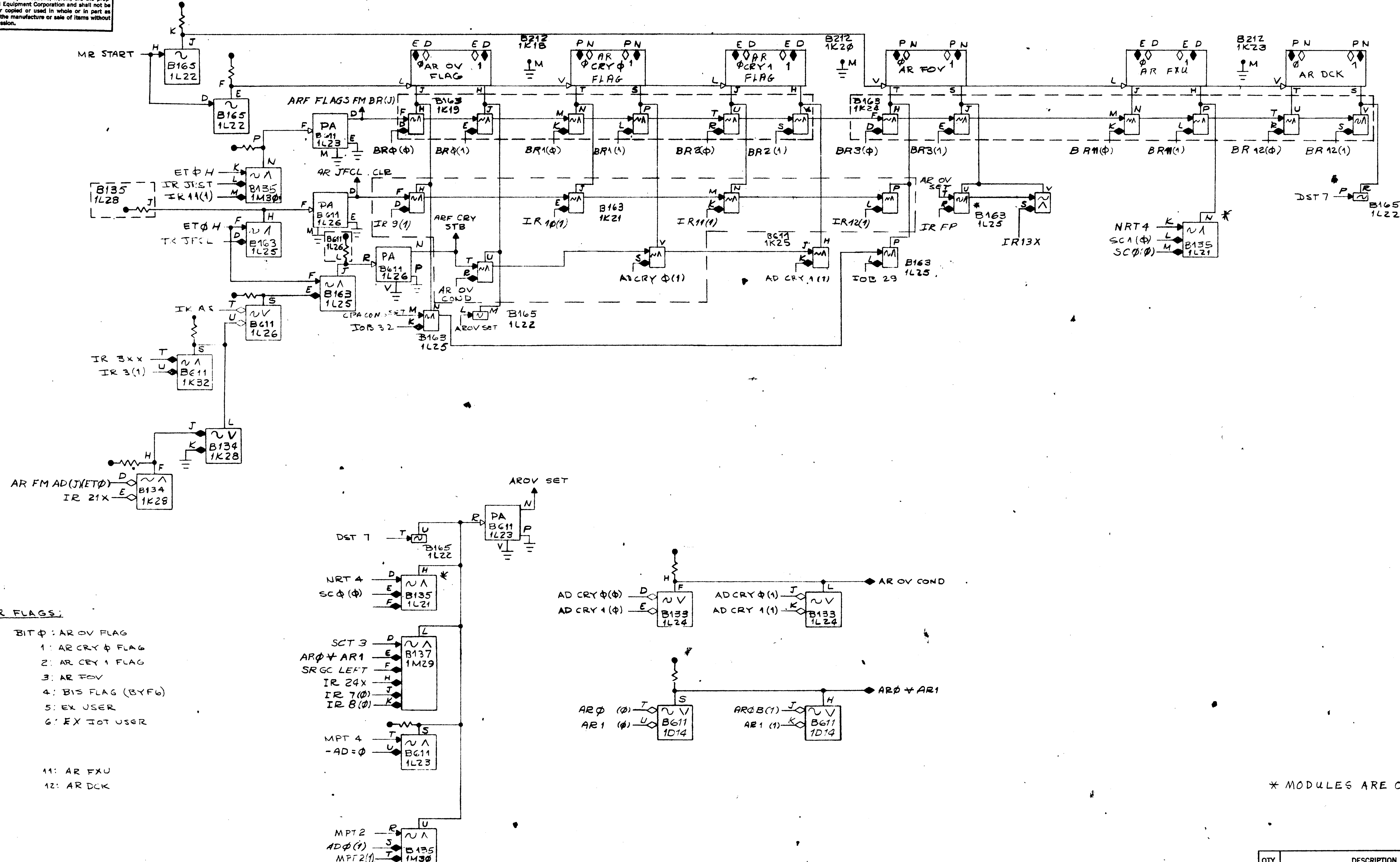

AR FLAGS:

BIT Φ: AR OV FLAG
1: AR CRY Φ FLAG
2: AR CRY 1 FLAG
3: AR FOV
4: BIS FLAG (BYF6)
5: EX USER
6: EX IOT USER

11: AR FXU
12: AR DCK

* MODULES ARE OPTIONAL

REVISIONS		
CHK	CHANGE NO.	REV.
	WIRE LISTED 2/23	PΦ5

UNLESS OTHERWISE SPECIFIED
DIMENSION IN INCHES
TOLERANCES
DECIMALS ±.005 FRACTIONS ± 1/64 ANGLES ± 0°30'
FINAL SURFACE QUALITY √
REMOVE BURRS AND BREAK SHARP CORNERS

MATERIAL

FINISH

QTY.	DESCRIPTION	PART NO.	ITEM NO.

PARTS LIST

DRN. [signature] DATE 8-15-66
CHKD. DATE
ENG. DATE
PROJ. ENG. DATE
PROD. DATE
FIRST USED ON

digital EQUIPMENT CORPORATION MAYNARD, MASSACHUSETTS

TITLE ARITHMETIC FLAGS

SIZE D CODE BS NUMBER KA10-Φ-ARF REV. PΦ5

SCALE
SHEET OF
DIST.

DEC FORM NO.

This drawing and specifications, herein, are the property of Digital Equipment Corporation and shall not be reproduced or copied or used in whole or in part as the basis for the manufacture or sale of items without written permission.

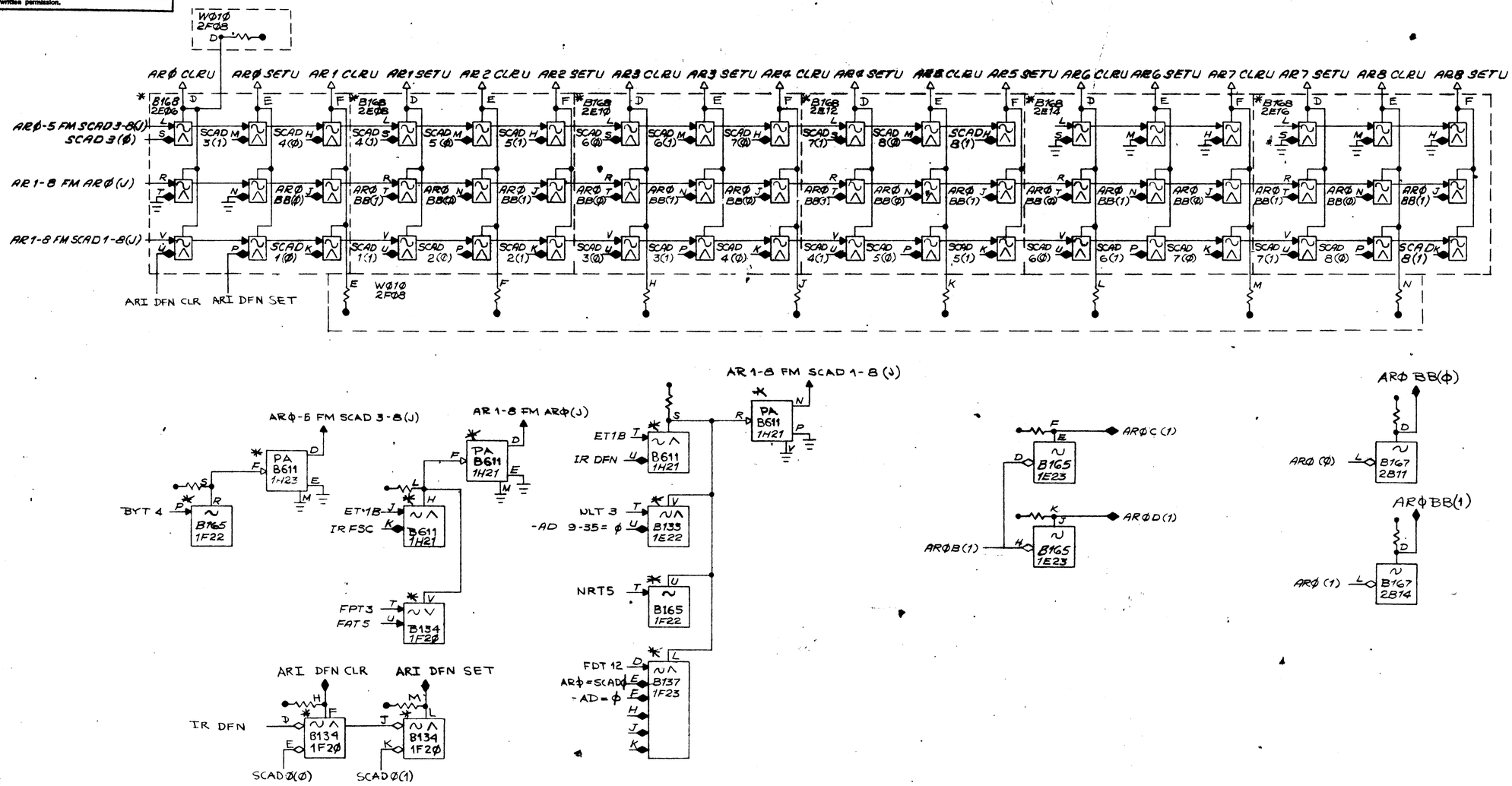

*MODULES ARE OPTIONAL

QTY.	DESCRIPTION	PART NO.	ITEM NO.

PARTS LIST

UNLESS OTHERWISE SPECIFIED
DIMENSION IN INCHES
TOLERANCES
DECIMALS ± .005 FRACTIONS ± 1/64 ANGLES ± 0°30'
FINAL SURFACE QUALITY ✓
REMOVE BURRS AND BREAK SHARP CORNERS

MATERIAL

FINISH

DRN. 9/8/66 DATE
CHK'D. DATE
ENG. DATE
PROJ. ENG. DATE
PROD. DATE
FIRST USED ON
SCALE
SHEET OF

digital EQUIPMENT CORPORATION
MAYNARD, MASSACHUSETTS

TITLE AR INPUTS

SIZE D CODE B5 NUMBER ARI REV. Ø7

DIST.

REVISIONS
CHANGE NO. WIRE LISTED 2/23 REV. Ø7
CHK.

This drawing and specifications, herein, are the property of Digital Equipment Corporation and shall not be reproduced or copied or used in whole or in part as the basis for the manufacture or sale of items without written permission.

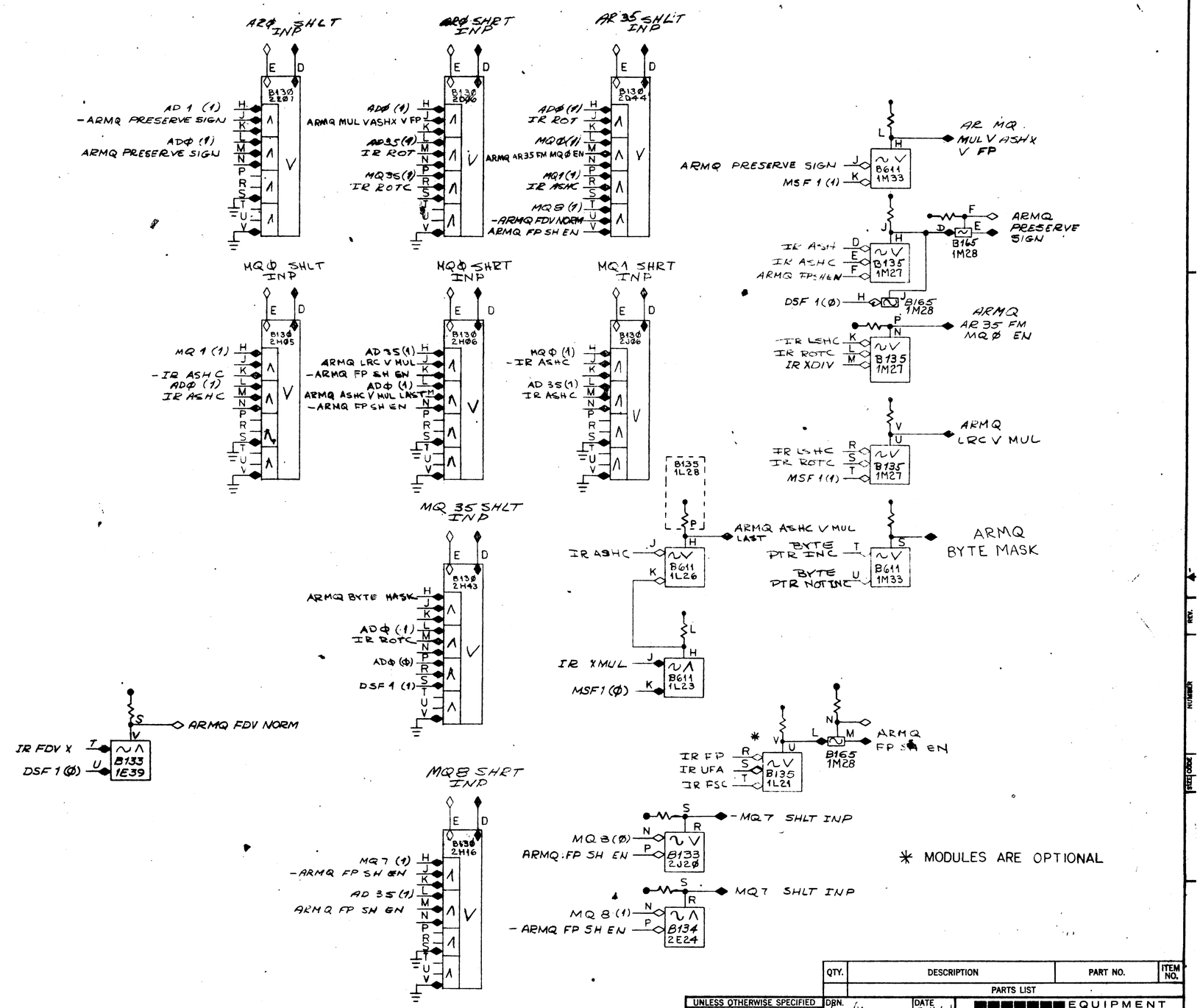

REVISIONS			
CHK	CHANGE NO.	REV.	
	WIRE LISTED 2/23	P00	
	REVISED 3/17/67	P07	
	REVISED 3/31/67	P08	

QTY.	DESCRIPTION	PART NO.	ITEM NO.
	PARTS LIST		

UNLESS OTHERWISE SPECIFIED
UNLESS OTHERWISE SPECIFIED
DIMENSION IN INCHES
TOLERANCES
DECIMALS ± .005 FRACTIONS ± 1/64 ANGLES ± 0°30'
FINAL SURFACE QUALITY √
REMOVE BURRS AND BREAK SHARP CORNERS

MATERIAL

FINISH

DRN.	DATE 8/11/66	digital EQUIPMENT CORPORATION MAYNARD, MASSACHUSETTS
CHK'D.	DATE	
ENG.	DATE	TITLE AR & MQ SHIFT CONNECTIONS
PROJ. ENG.	DATE	
PROD.	DATE	
FIRST USED ON		
SCALE		SIZE D CODE BS NUMBER ARMQ REV. P08
SHEET OF		DIST.

This drawing and specifications, herein, are the property of Digital Equipment Corporation and shall not be reproduced or copied or used in whole or in part as the basis for the manufacture or sale of items without written permission.

✳ MODULES ARE OPTIONAL

QTY	DESCRIPTION	PART NO	ITEM NO

PARTS LIST

DO NOT SCALE DRAWING

UNLESS OTHERWISE SPECIFIED DIMENSIONS IN INCHES TOLERANCES DECIMALS FRACTIONS ANGLES

REMOVE BURRS AND BREAK SHARP CORNERS

MATERIAL

FINISH

DRN | DATE

CHK'D | DATE

ENG | DATE

PROJ ENG | DATE

PROD | DATE

FIRST USED ON

SCALE

digital EQUIPMENT CORPORATION MAYNARD, MASSACHUSETTS

TITLE BR REGISTER

CODE BS SIZE D NUMBER 168-0-BR2 REV

REVISIONS | REV. | CHANGE NO | CHK

SIZE D NUMBER 168-0-BR2 REV

This drawing and specifications, herein, are the property of Digital Equipment Corporation and shall not be reproduced or copied or used in whole or in part as the basis for the manufacture or sale of items without written permission.

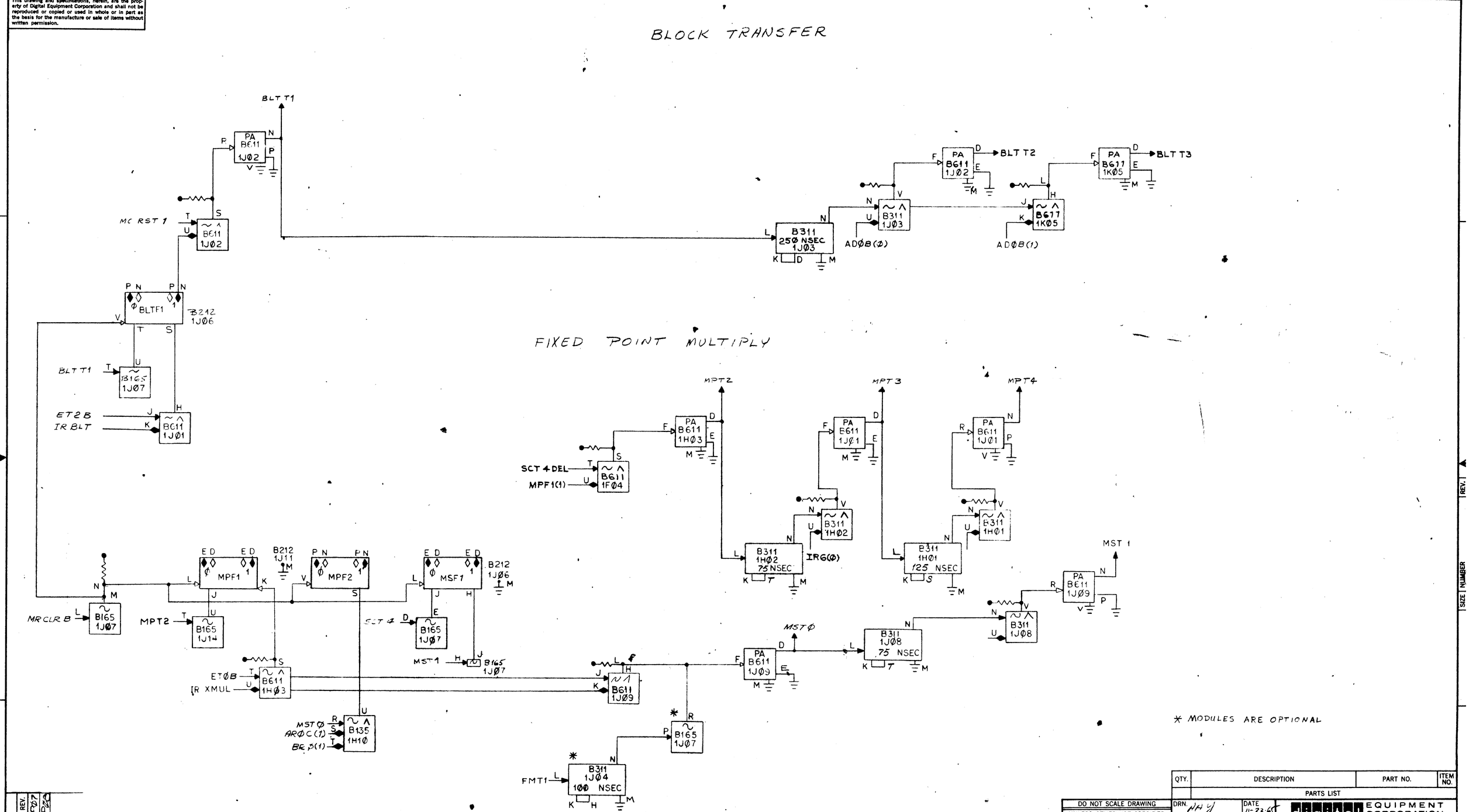

REVISIONS		
CHANGE NO.		REV.
WIRE LISTED 2/23		P07
REVISED 4/9/67		P08
CHK.		

QTY.	DESCRIPTION	PART NO.	ITEM NO.
	PARTS LIST		

DO NOT SCALE DRAWING

UNLESS OTHERWISE SPECIFIED
DIMENSION IN INCHES
TOLERANCES
DECIMALS ± .005 FRACTIONS ± 1/64 ANGLES ± 0°30'
FINAL SURFACE QUALITY ✓
REMOVE BURRS AND BREAK SHARP CORNERS

MATERIAL

FINISH

DRN. HHY	DATE 11-22-65	digital EQUIPMENT CORPORATION MAYNARD, MASSACHUSETTS
CHK'D.	DATE	
ENG.	DATE	TITLE BLOCK TRANSFER, AND MULTIPLY
PROJ. ENG.	DATE	
PROD.	DATE	
FIRST USED ON		
SCALE		CODE BS · SIZE · NUMBER D-168-6-BTMP · REV. P08
SHEET OF		DIST.

DEC FORM NO.

This drawing and specifications, herein, are the property of Digital Equipment Corporation and shall not be reproduced or copied or used in whole or in part as the basis for the manufacture or sale of items without written permission.

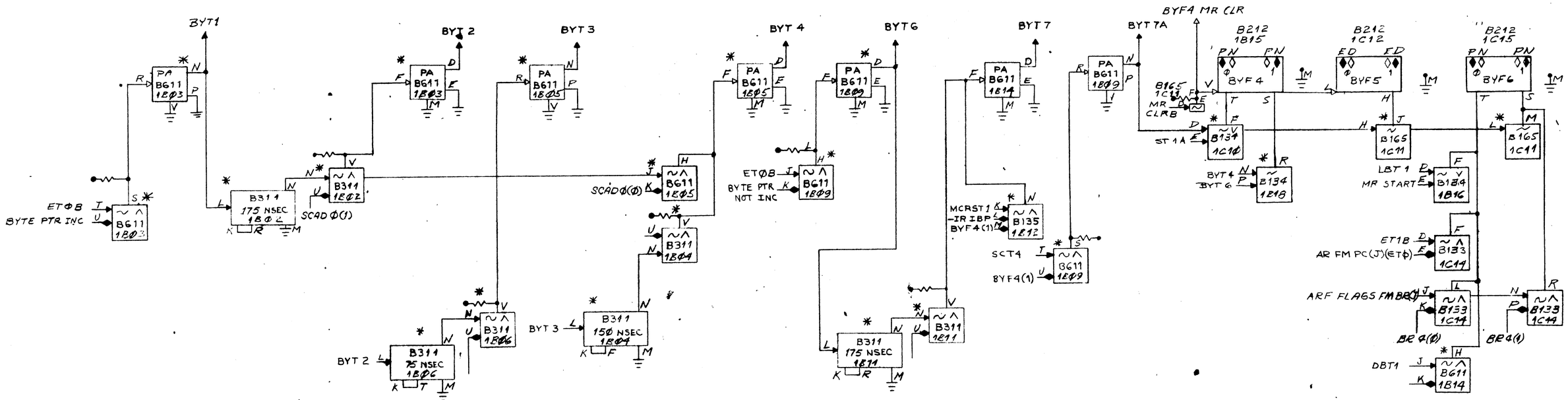

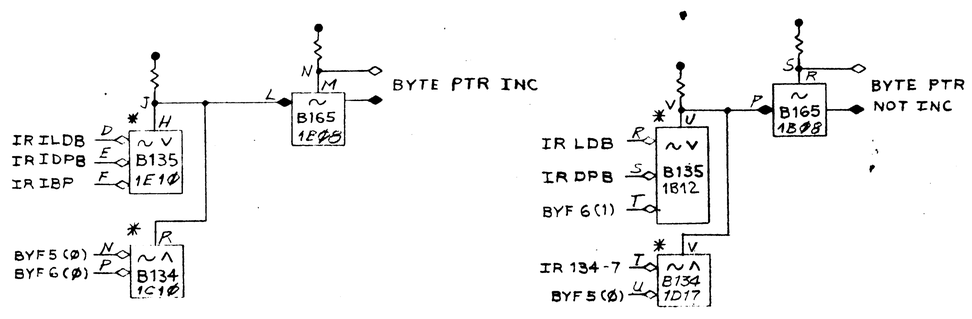

* MODULES ARE OPTIONAL

REVISIONS		
CHK.	CHANGE NO.	REV.
	WIRE LISTED 2/23	P07
	REVISED 4/11/67	P08

DO NOT SCALE DRAWING

UNLESS OTHERWISE SPECIFIED
DIMENSION IN INCHES
TOLERANCES
DECIMALS ± .005 FRACTIONS ± 1/64 ANGLES ± 0°30'
FINAL SURFACE QUALITY √
REMOVE BURRS AND BREAK SHARP CORNERS

MATERIAL

FINISH

QTY.	DESCRIPTION	PART NO.	ITEM NO.
	PARTS LIST		

DRN.		DATE 11-22-66
CHK'D.		DATE
ENG.		DATE
PROJ. ENG.		DATE
PROD.		DATE
FIRST USED ON		
SCALE		
SHEET	OF	

digital EQUIPMENT CORPORATION
MAYNARD, MASSACHUSETTS

TITLE
BYTE INSTRUCTION
FIRST PART

CODE	SIZE	NUMBER	REV.
ES		D-168-0-BYTE	P08

DIST.

This drawing and specifications, herein, are the property of Digital Equipment Corporation and shall not be reproduced or copied or used in whole or in part as the basis for the manufacture or sale of items without written permission.

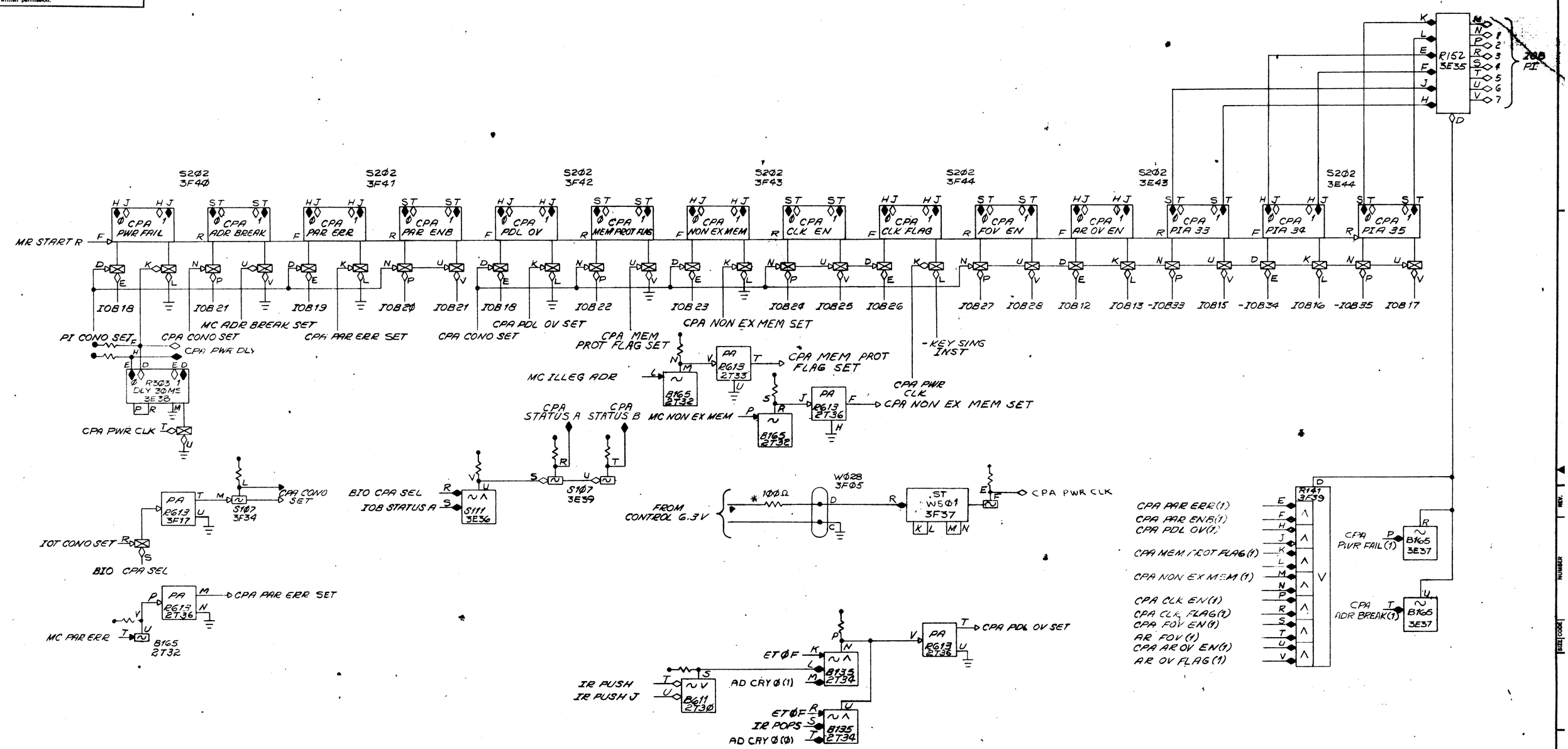

* NOTE:
1ØØΩ ½ WATT RESISTOR MOUNTED ON WØ28 MODULE

REVISIONS			
CHK	CHANGE NO.		REV.
	WIRE LISTED 2/23		P08
	REVISED 3/16/67		P09
	REVISED 3/23/67		P10

QTY.	DESCRIPTION	PART NO.	ITEM NO.
	PARTS LIST		

UNLESS OTHERWISE SPECIFIED
UNLESS OTHERWISE SPECIFIED
DIMENSION IN INCHES
TOLERANCES
DECIMALS ± .005 FRACTIONS ± 1/64 ANGLES ± 0°30'
FINAL SURFACE QUALITY ✓
REMOVE BURRS AND BREAK SHARP CORNERS

MATERIAL

FINISH

DRN. DATE 1/6/66
CHKD. DATE
ENG. DATE
PROJ. ENG. DATE
PROD. DATE
FIRST USED ON
SCALE
SHEET OF

digital EQUIPMENT CORPORATION
MAYNARD, MASSACHUSETTS

TITLE
ARITHMETIC PROCESSOR STATUS REGISTER

SIZE D CODE BS NUMBER CPA REV. P10
DIST.

This drawing and specifications, herein, are the property of Digital Equipment Corporation and shall not be reproduced or copied or used in whole or in part as the basis for the manufacture or sale of items without written permission.

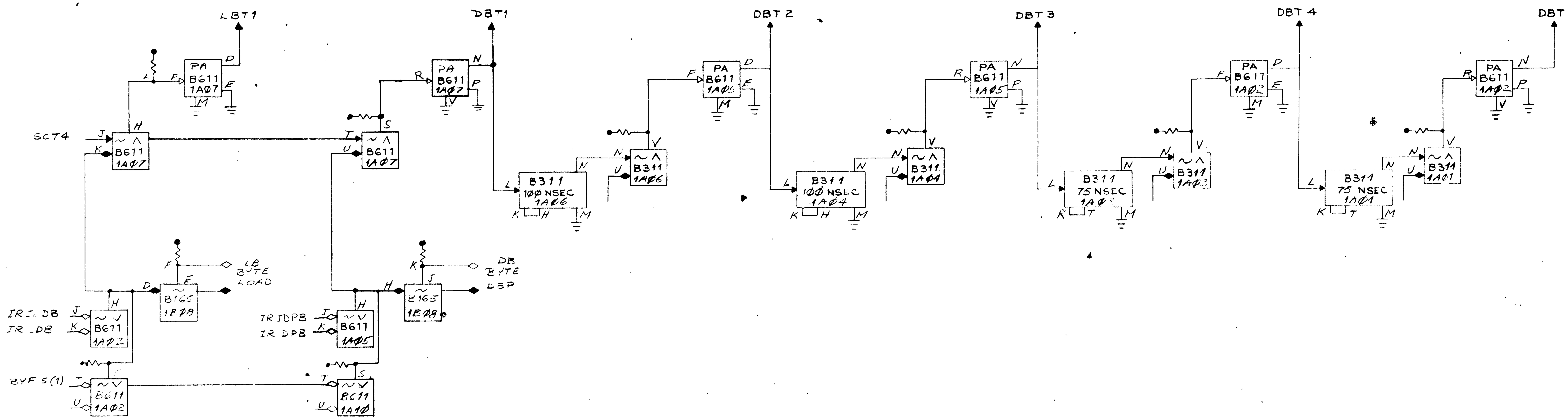

ALL MODULES ON THIS SHEET ARE OPTIONAL

QTY.	DESCRIPTION	PART NO.	ITEM NO.
	PARTS LIST		

DO NOT SCALE DRAWING
UNLESS OTHERWISE SPECIFIED DIMENSION IN INCHES
TOLERANCES
DECIMALS ± .005 FRACTIONS ± 1/64 ANGLES ± 0°30'
FINAL SURFACE QUALITY
REMOVE BURRS AND BREAK SHARP CORNERS
MATERIAL
FINISH

DRN. DATE 11-22-65
CHK'D. DATE
ENG. DATE
PROJ. ENG. DATE
PROD. DATE
FIRST USED ON
SCALE
SHEET OF

digital EQUIPMENT CORPORATION MAYNARD, MASSACHUSETTS

TITLE BYTE INSTRUCTION SECOND PART: DEPOSIT AND LOAD

CODE BS SIZE D NUMBER DBLB REV. P06

REV.	CHANGE NO.	CHK
P05	WIRE LISTED 2/23	
P06	REVISED 9/9/67	

DEC FORM NO.

This drawing and specifications, herein, are the property of Digital Equipment Corporation and shall not be reproduced or copied or used in whole or in part as the basis for the manufacture or sale of items without written permission.

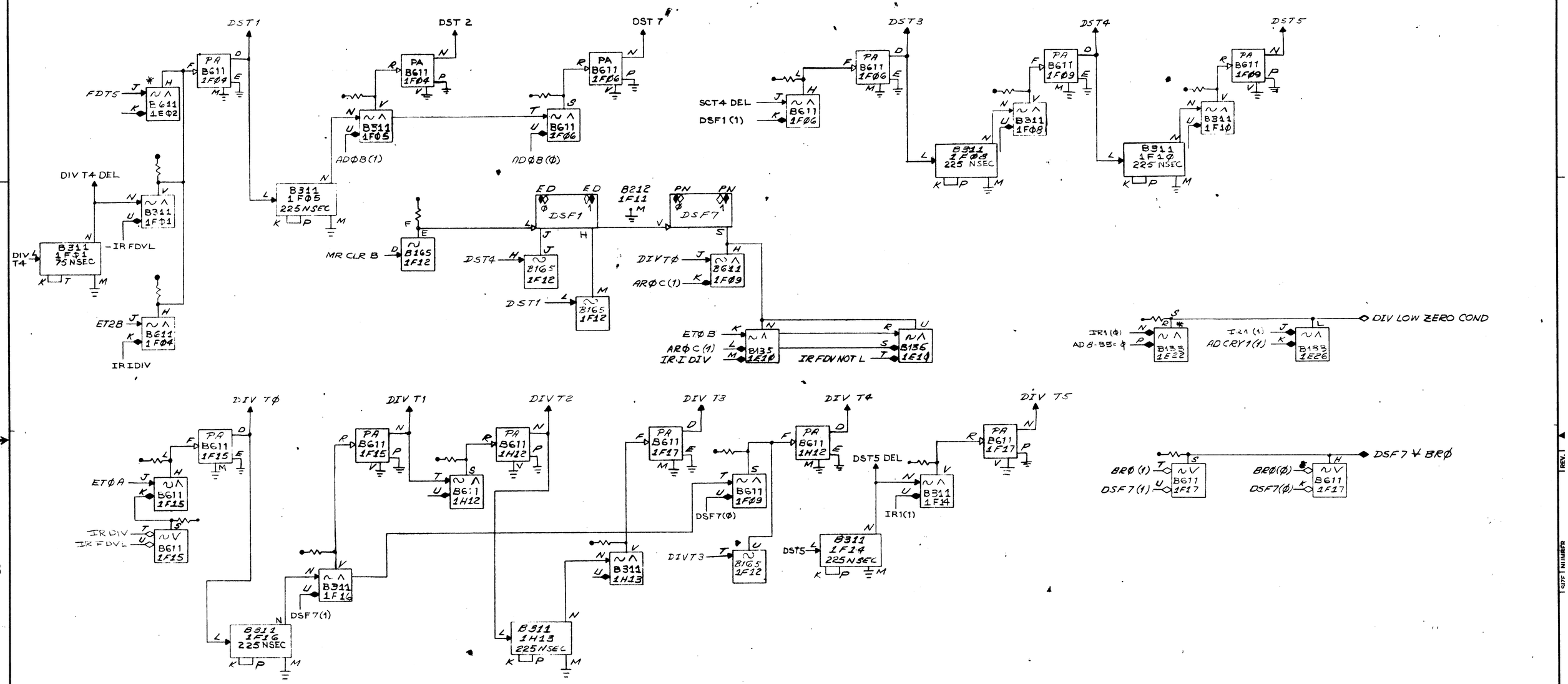

* MODULES ARE OPTIONAL

QTY.	DESCRIPTION	PART NO.	ITEM NO.
	PARTS LIST		

DO NOT SCALE DRAWING

UNLESS OTHERWISE SPECIFIED
DIMENSION IN INCHES
TOLERANCES
DECIMALS ± .005 FRACTIONS ± 1/64 ANGLES ± 0°30'
FINAL SURFACE QUALITY ✓
REMOVE BURRS AND BREAK SHARP CORNERS

MATERIAL

FINISH

DRN. GB DATE 11/23/65
CHK'D. DATE
ENG. DATE
PROJ. ENG. DATE
PROD. DATE
FIRST USED ON
SCALE
SHEET OF

digital EQUIPMENT CORPORATION
MAYNARD, MASSACHUSETTS

TITLE
DIVIDE SUBROUTINE AND FIXED DIVIDE

CODE BS SIZE D NUMBER DSDV REV. PØ8

DIST.

REVISIONS

CHK	CHANGE NO.	REV.
	WIRE LISTED 9/23	PØ7
	REVISED 4/1	PØ8

This drawing and specifications, herein, are the property of Digital Equipment Corporation and shall not be reproduced or copied or used in whole or in part as the basis for the manufacture or sale of items without written permission.

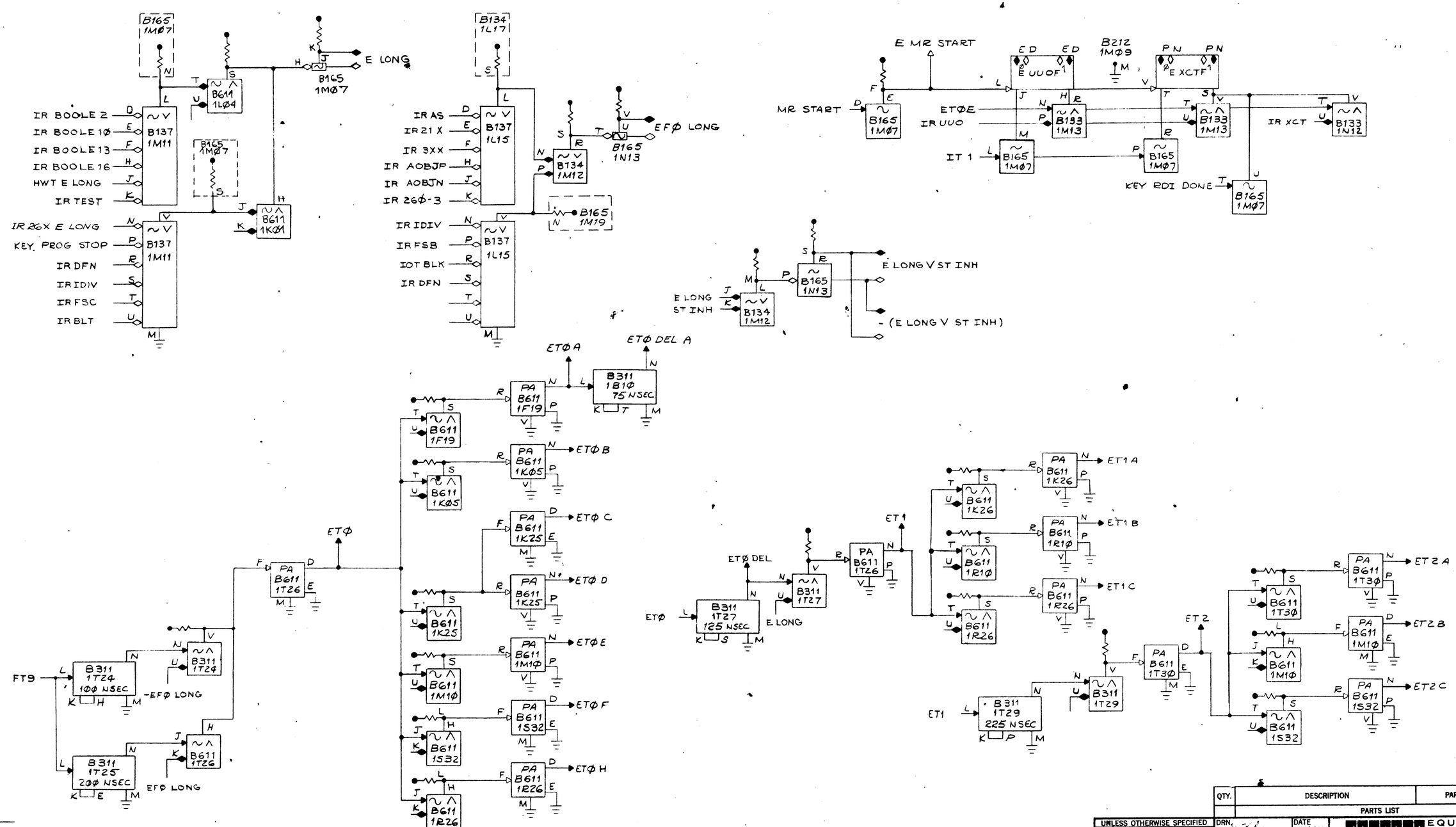

QTY.	DESCRIPTION	PART NO.	ITEM NO.
	PARTS LIST		

UNLESS OTHERWISE SPECIFIED
DIMENSION IN INCHES
TOLERANCES
DECIMALS ± .005 FRACTIONS ± 1/64 ANGLES ± 0°30'
FINAL SURFACE QUALITY ✓
REMOVE BURRS AND BREAK SHARP CORNERS

MATERIAL

FINISH

		DATE
DRN.		11/8/66
CHK'D.		DATE
ENG.		DATE
PROJ. ENG.		DATE
PROD.		DATE

FIRST USED ON

SCALE

SHEET OF

digital EQUIPMENT CORPORATION
MAYNARD, MASSACHUSETTS

TITLE
EXECUTION CYCLE

SIZE	CODE	NUMBER	REV.
D	BS	D-168-O-E	PØ7

DIST.

REVISIONS		
CHK.	CHANGE NO.	REV.
	WIRE LISTED 2/23	PØ7
	REVISED 4/26/67	PØ8

This drawing and specifications, herein, are the property of Digital Equipment Corporation and shall not be reproduced or copied or used in whole or in part as the basis for the manufacture or sale of items without written permission.

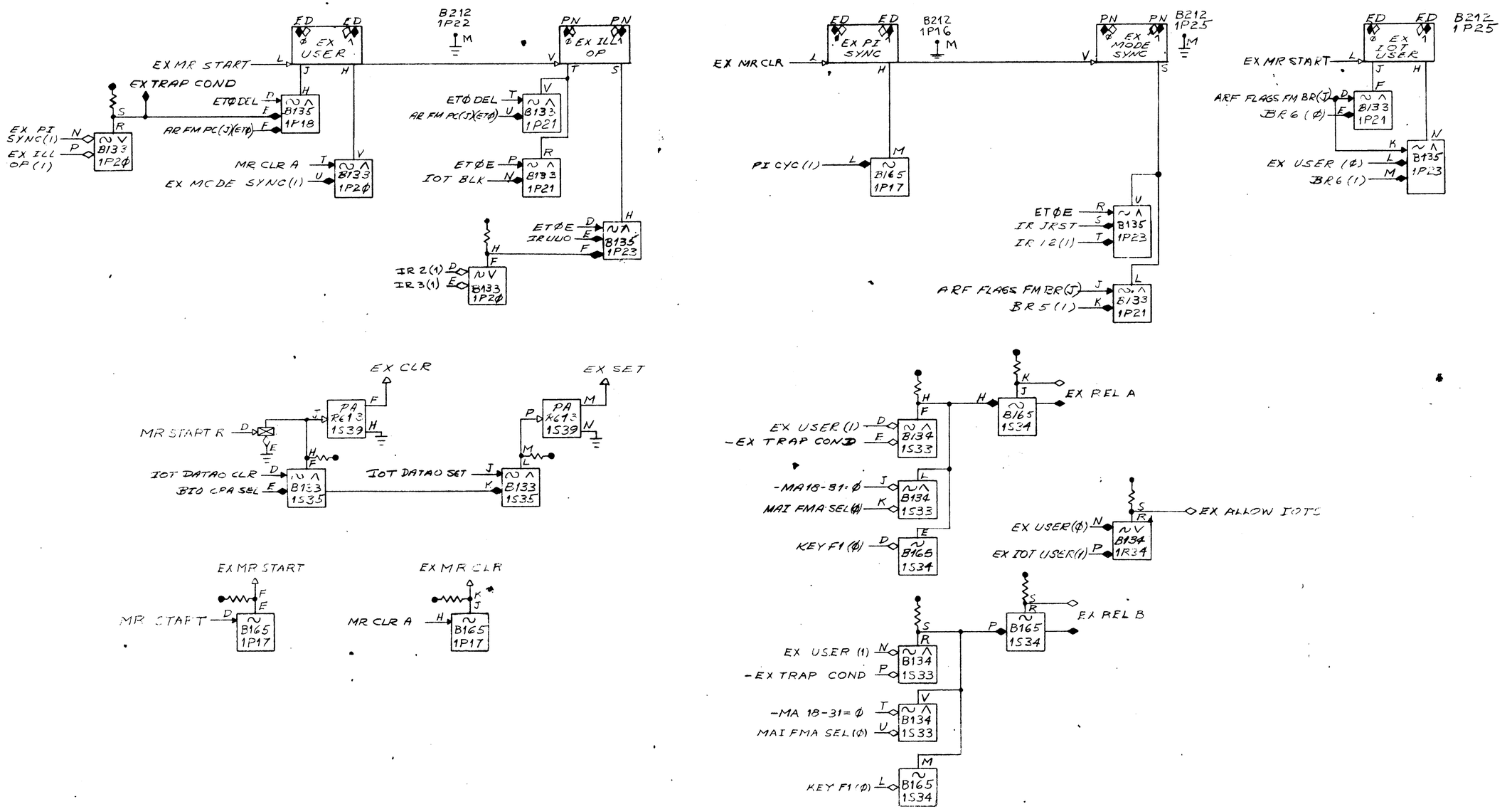

REVISIONS		
CHK	CHANGE NO.	REV.
	WIRE LISTED 2/23	F00
	REVISED 5/25/67	F07

QTY.	DESCRIPTION	PART NO.	ITEM NO.
	PARTS LIST		

DO NOT SCALE DRAWING

UNLESS OTHERWISE SPECIFIED
DIMENSION IN INCHES
TOLERANCES
DECIMALS ± .005 FRACTIONS ± 1/64 ANGLES ± 0°30'
FINAL SURFACE QUALITY ✓
REMOVE BURRS AND BREAK SHARP CORNERS

MATERIAL

FINISH

DRN. G.B.	DATE 12/29/67	digital EQUIPMENT CORPORATION MAYNARD, MASSACHUSETTS
CHK'D.	DATE	
ENG.	DATE	TITLE EXECUTIVE CONTROL
PROJ. ENG.	DATE	
PROD.	DATE	
FIRST USED ON		
SCALE		CODE BS SIZE D NUMBER EX REV. F07
SHEET OF		DIST.

DEC FORM NO.

This drawing and specifications, herein, are the property of Digital Equipment Corporation and shall not be reproduced or copied or used in whole or in part as the basis for the manufacture or sale of items without written permission.

REVISIONS		
REV.	CHANGE NO.	CHK
FΦ6	WIRE LISTED 2/23	
PΦ7	REVISED 4/4/67	

DO NOT SCALE DRAWING

UNLESS OTHERWISE SPECIFIED
DIMENSION IN INCHES
TOLERANCES
DECIMALS ± .005 FRACTIONS ± 1/64 ANGLES ± 0°30'
FINAL SURFACE QUALITY √
REMOVE BURRS AND BREAK SHARP CORNERS

MATERIAL

FINISH

QTY.	DESCRIPTION	PART NO.	ITEM NO.
	PARTS LIST		

DRN. A. [signature] DATE 11-15-65
CHK'D. DATE
ENG. DATE
PROJ. ENG. DATE
PROD. DATE
FIRST USED ON
SCALE
SHEET OF

digital EQUIPMENT CORPORATION
MAYNARD, MASSACHUSETTS

TITLE
FETCH CYCLE
TIME PULSES

CODE BS SIZE D NUMBER 168-0-F1 REV. PΦ7
DIST.

DEC FORM NO.

This drawing and specifications, herein, are the property of Digital Equipment Corporation and shall not be reproduced or copied or used in whole or in part as the basis for the manufacture or sale of items without written permission.

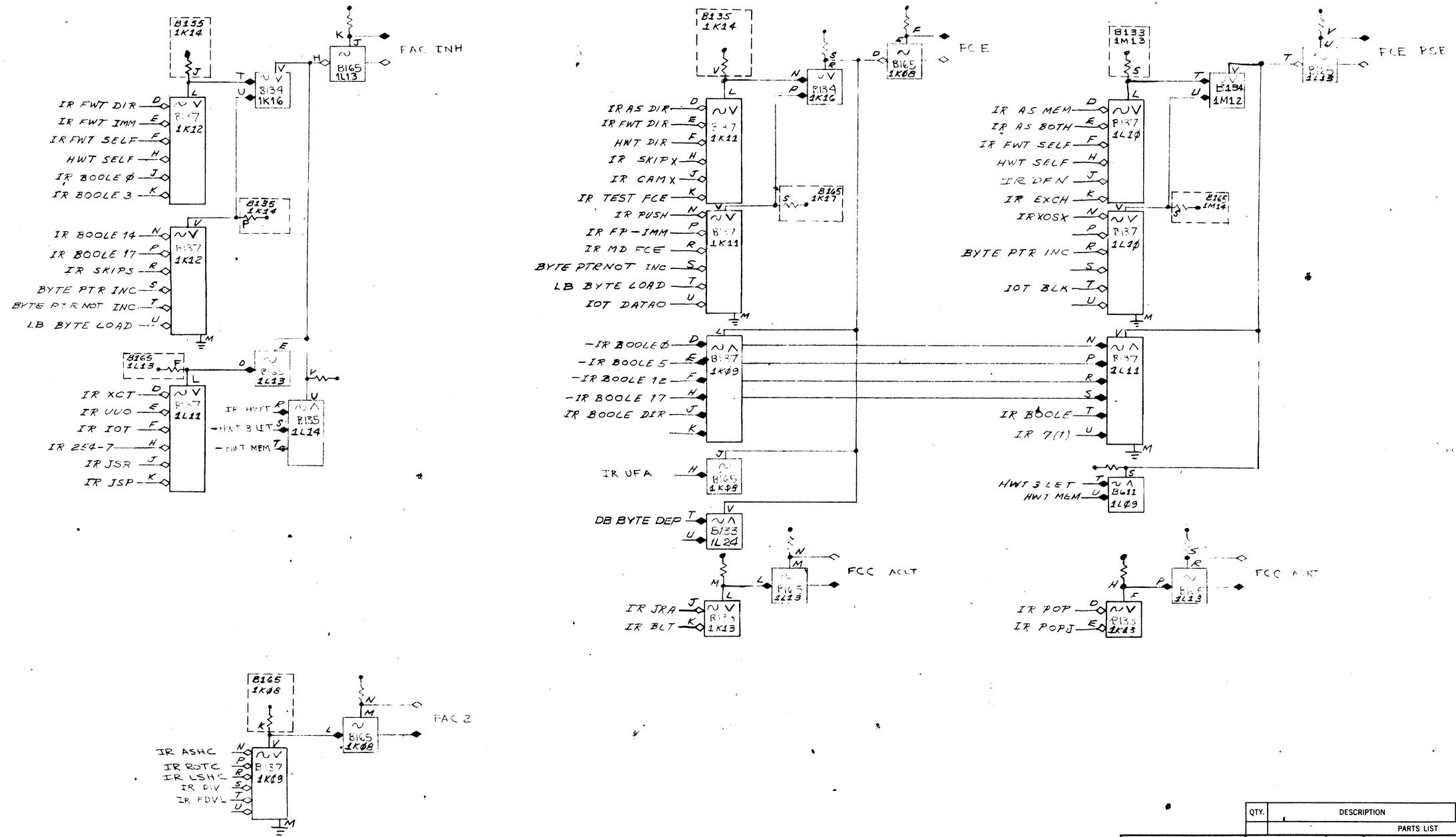

REV.	CHANGE NO.	CHK
P05	WIRE LISTED 7-23	
P06	REVISED 4-14-67	

QTY.	DESCRIPTION	PART NO.	ITEM NO.
	PARTS LIST		

DO NOT SCALE DRAWING

UNLESS OTHERWISE SPECIFIED
DIMENSION IN INCHES
TOLERANCES
DECIMALS ± .005 FRACTIONS ± 1/64 ANGLES ± 0°30'
FINAL SURFACE QUALITY √
REMOVE BURRS AND BREAK SHARP CORNERS

MATERIAL

FINISH

DRN. GB	DATE 11/13/65	digital EQUIPMENT CORPORATION MAYNARD, MASSACHUSETTS
CHK'D.	DATE	TITLE
ENG.	DATE	FETCH CYCLE LEVELS
PROJ. ENG.	DATE	
PROD.	DATE	
FIRST USED ON		CODE BS · SIZE D · NUMBER 168-0-F2 · REV. P06
SCALE		
SHEET OF		DIST.

This drawing and specifications, herein, are the property of Digital Equipment Corporation and shall not be reproduced or copied or used in whole or in part as the basis for the manufacture or sale of items without written permission.

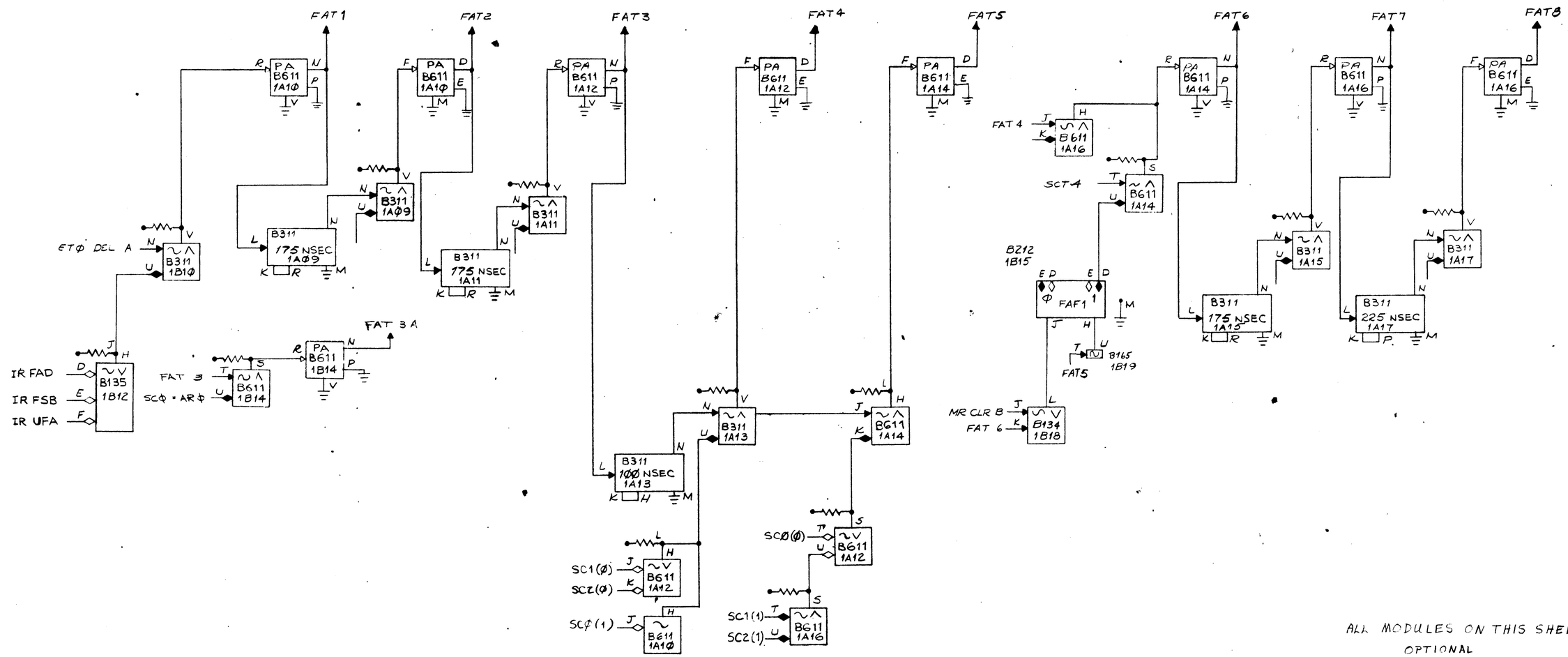

ALL MODULES ON THIS SHEET ARE OPTIONAL

REVISIONS		
CHK	CHANGE NO.	REV.
	WIRE LISTED 2/23	P07
	REVISED 4/4/67	P08

QTY.	DESCRIPTION	PART NO.	ITEM NO.
	PARTS LIST		

DO NOT SCALE DRAWING

UNLESS OTHERWISE SPECIFIED
DIMENSION IN INCHES
TOLERANCES
DECIMALS ± .005 FRACTIONS ± 1/64 ANGLES ± 0°30'
FINAL SURFACE QUALITY ✓
REMOVE BURRS AND BREAK SHARP CORNERS

MATERIAL

FINISH

DRN.		DATE 11-16-65
CHK'D		DATE
ENG.		DATE
PROJ. ENG.		DATE
PROD.		DATE
FIRST USED ON		
SCALE		
SHEET	OF	

digital EQUIPMENT CORPORATION
MAYNARD, MASSACHUSETTS

TITLE
FLOATING ADD INSTRUCTION

CODE	SIZE	NUMBER	REV.
BS	D	D-16B-0-FA	P08

DIST.

This drawing and specifications, herein, are the property of Digital Equipment Corporation and shall not be reproduced or copied or used in whole or in part as the basis for the manufacture or sale of items without written permission.

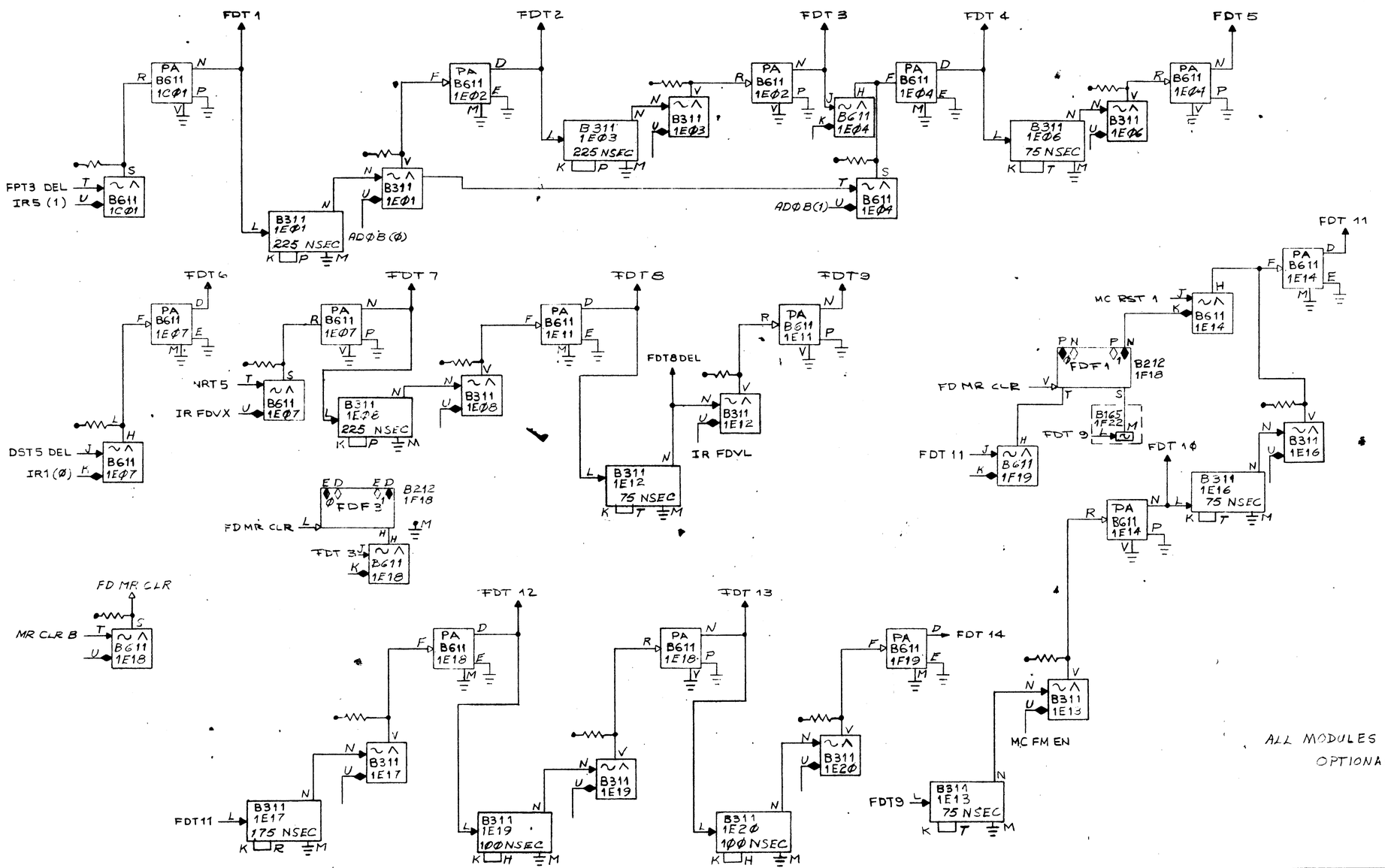

REVISIONS			
CHK	CHANGE NO.		REV.
	WAGE LISTED 2/23		PØ6
	REVISED 3/9/67		PØ7
	REVISED 5/4/67		PØ8

QTY.	DESCRIPTION	PART NO.	ITEM NO.
	PARTS LIST		

UNLESS OTHERWISE SPECIFIED
UNLESS OTHERWISE SPECIFIED
DIMENSION IN INCHES
TOLERANCES
DECIMALS ± .005 FRACTIONS ± 1/64 ANGLES ± 0°30'
FINAL SURFACE QUALITY √
REMOVE BURRS AND BREAK SHARP CORNERS

MATERIAL

FINISH

DRN.		DATE 3/11/66
CHKD.		DATE
ENG.		DATE
PROJ. ENG.		DATE
PROD.		DATE
FIRST USED ON		
SCALE		
SHEET	OF	

digital EQUIPMENT CORPORATION
MAYNARD, MASSACHUSETTS

TITLE
FLOATING DIVIDE

SIZE	CODE	NUMBER	REV.
D	B3	168-Ø- FDV	PØB

DIST.

This drawing and specifications, herein, are the property of Digital Equipment Corporation and shall not be reproduced or copied or used in whole or in part as the basis for the manufacture or sale of items without written permission.

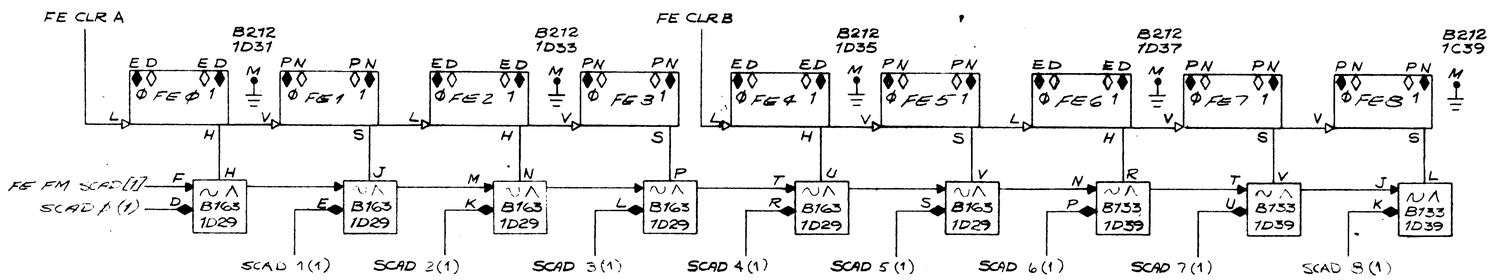

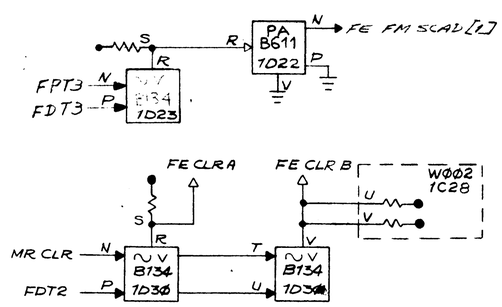

ALL MODULES ON THIS SHEET ARE OPTIONAL

QTY.	DESCRIPTION	PART NO.	ITEM NO.

PARTS LIST

UNLESS OTHERWISE SPECIFIED

UNLESS OTHERWISE SPECIFIED
DIMENSION IN INCHES
TOLERANCES
DECIMALS ± .005 FRACTIONS ± 1/64 ANGLES ± 0°30'
FINAL SURFACE QUALITY √
REMOVE BURRS AND BREAK SHARP CORNERS

MATERIAL

FINISH

DRN. Joe Dynes DATE 8-3-66
CHK. DATE
ENG. DATE
PROJ. ENG. DATE
PROD. DATE
FIRST USED ON
SCALE
SHEET OF

digital EQUIPMENT CORPORATION
MAYNARD, MASSACHUSETTS

TITLE FLOATING EXPONENT REGISTER AND CONTROL

SIZE D CODE B5 NUMBER FE REV. Φ0

DIST.

REVISIONS

CHK.	CHANGE NO.	REV.
	WHLE LISTED 2/23	P06

This drawing and specifications, herein, are the property of Digital Equipment Corporation and shall not be reproduced or copied or used in whole or in part as the basis for the manufacture or sale of items without written permission.

B199

INPUT LEVEL				OUT ENB (-3V)
KF	KJ	KK	KL	
Ø	Ø	Ø	Ø	KR
Ø	Ø	Ø	-3	KP
Ø	Ø	-3	Ø	KT
Ø	Ø	-3	-3	KS
Ø	-3	Ø	Ø	LD
Ø	-3	Ø	-3	KU
Ø	-3	-3	Ø	LF
Ø	-3	-3	-3	LE
-3	Ø	Ø	Ø	LJ
-3	Ø	Ø	-3	LH
-3	Ø	-3	Ø	LL
-3	Ø	-3	-3	LK
-3	-3	Ø	Ø	LP
-3	-3	Ø	-3	LN
-3	-3	-3	Ø	LS
-3	-3	-3	-3	LR

REVISIONS

REV.	CHANGE NO.	CHK
FC7	WIRE LISTED 2/28	
P08	REVISED 3/16/67	
P09	REVISED 4/4/67	
P10	REVISED 4/11/67	
P11	REVISED 4/27/67	

QTY.	DESCRIPTION	PART NO.	ITEM NO.

PARTS LIST

UNLESS OTHERWISE SPECIFIED
DIMENSION IN INCHES
TOLERANCES
DECIMALS ± .005 FRACTIONS ± 1/64 ANGLES ± 0°30'
FINAL SURFACE QUALITY ✓
REMOVE BURRS AND BREAK SHARP CORNERS

MATERIAL

FINISH

DRN. DATE
CHK'D. DATE
ENG. DATE
PROJ. ENG. DATE
PROD. DATE
FIRST USED ON

digital EQUIPMENT CORPORATION MAYNARD, MASSACHUSETTS

TITLE FAST MEMORY ADDRESS

SIZE D CODE BS NUMBER KA10 FMA REV. P11

OF

DIST.

This drawing and specifications, herein, are the property of Digital Equipment Corporation and shall not be reproduced or copied or used in whole or in part as the basis for the manufacture or sale of items without written permission

NOTE: B25Ø GNDS
KC, KM, KV, LC, LM, LT

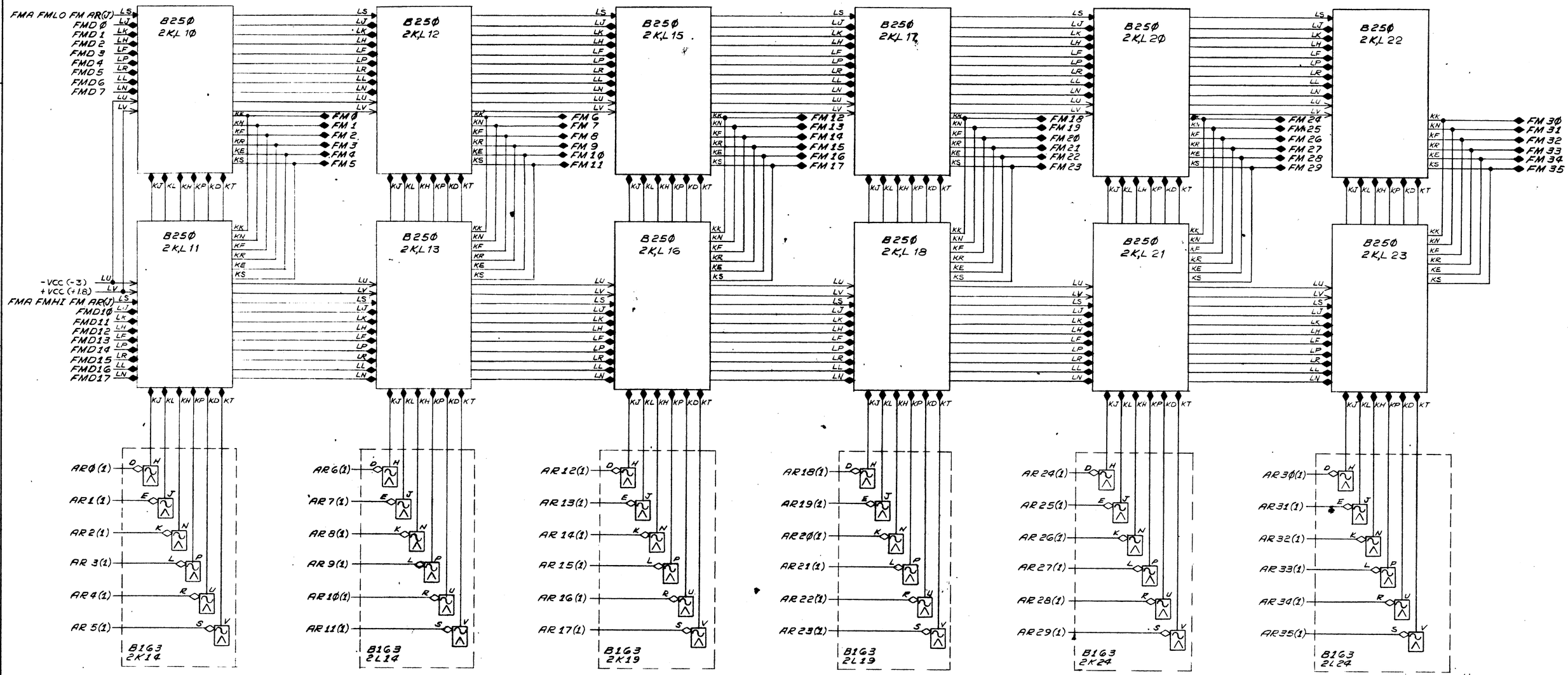

NOTE: ALL MODULES ON THIS SHEET ARE OPTIONAL

QTY.	DESCRIPTION	PART NO.	ITEM NO.
	PARTS LIST		

UNLESS OTHERWISE SPECIFIED
DIMENSION IN INCHES
TOLERANCES
DECIMALS ± .005 FRACTIONS ± 1/64 ANGLES ± 0°30'
FINAL SURFACE QUALITY
REMOVE BURRS AND BREAK SHARP CORNERS

MATERIAL

FINISH

DRN. JS	DATE 1/18/69	
CHK'D.	DATE	
ENG.	DATE	
PROJ. ENG.	DATE	
PROD.	DATE	
FIRST USED ON		
SCALE		
SHEET OF		

digital EQUIPMENT CORPORATION
MAYNARD, MASSACHUSETTS

TITLE
FAST MEMORY

SIZE	CODE	NUMBER	REV.
D		FM	PØ4

DIST.

REVISIONS		
CHK	CHANGE NO	REV
	WIRE LISTED 2/28	PØ4

DEC FORM NO

This drawing and specifications, herein, are the property of Digital Equipment Corporation and shall not be reproduced or copied or used in whole or in part as the basis for the manufacture or sale of items without written permission.

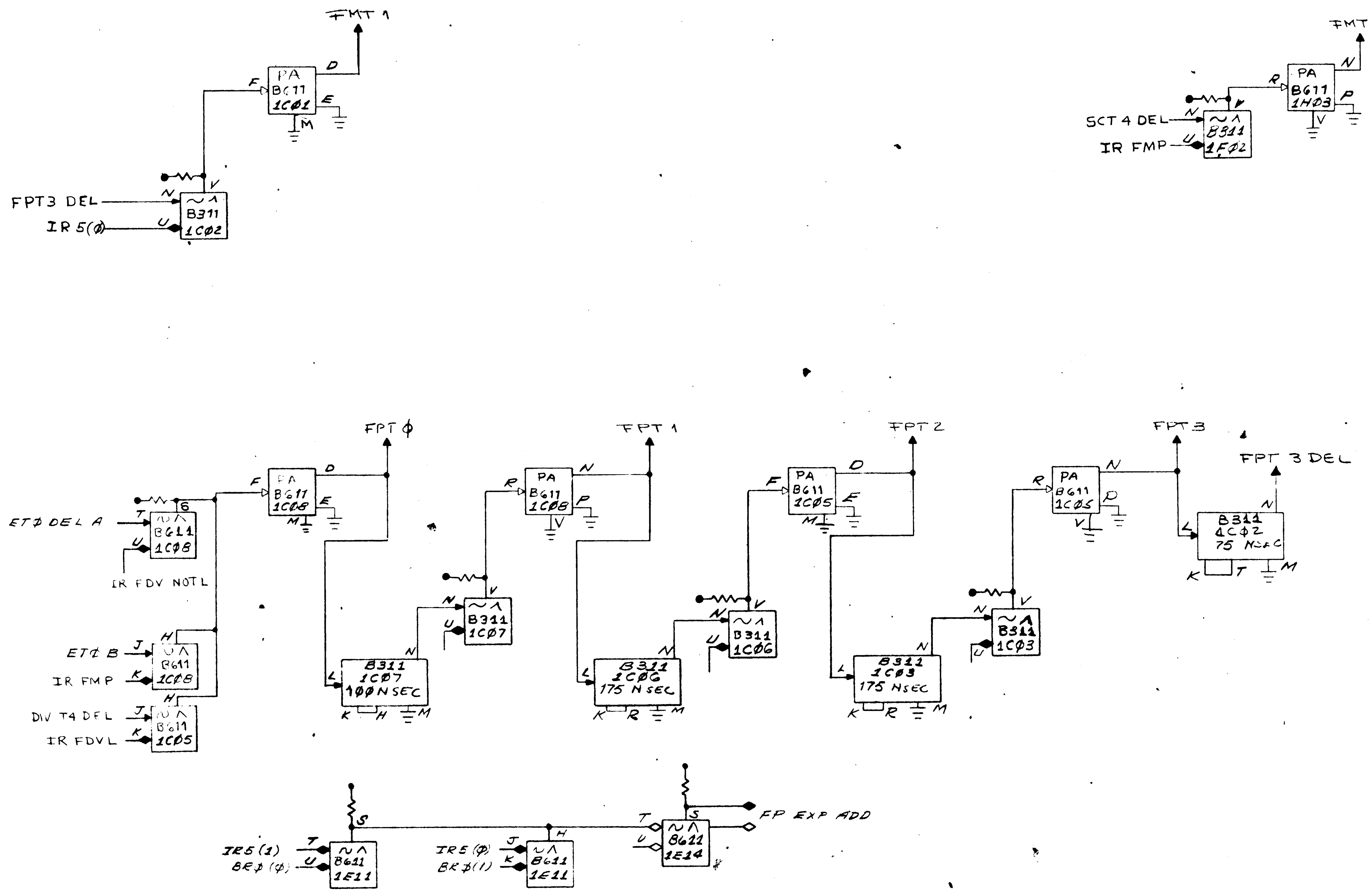

NOTE: ALL MODULES ON THIS SHEET ARE OPTIONAL

REVISIONS		
CHK	CHANGE NO.	REV.
	WIRE LISTED 2/23	P06
	REVISED 9/4/67	P07

QTY.	DESCRIPTION	PART NO.	ITEM NO.

PARTS LIST

UNLESS OTHERWISE SPECIFIED
DIMENSION IN INCHES
TOLERANCES
DECIMALS ± .005 FRACTIONS ± 1/64 ANGLES ± 0°30'
FINAL SURFACE QUALITY ✓
REMOVE BURRS AND BREAK SHARP CORNERS
MATERIAL
FINISH

DRN. Joe Ayres DATE 9/9/66
CHK'D. DATE
ENG. DATE
PROJ. ENG. DATE
PROD. DATE
FIRST USED ON
SCALE
SHEET OF

digital EQUIPMENT CORPORATION MAYNARD, MASSACHUSETTS

TITLE FP EXP CALC FLOATING MULTIPLY

SIZE D CODE BS NUMBER FPFM REV. P07
DIST.

This drawing and specifications, herein, are the property of Digital Equipment Corporation and shall not be reproduced or copied or used in whole or in part as the basis for the manufacture or sale of items without written permission.

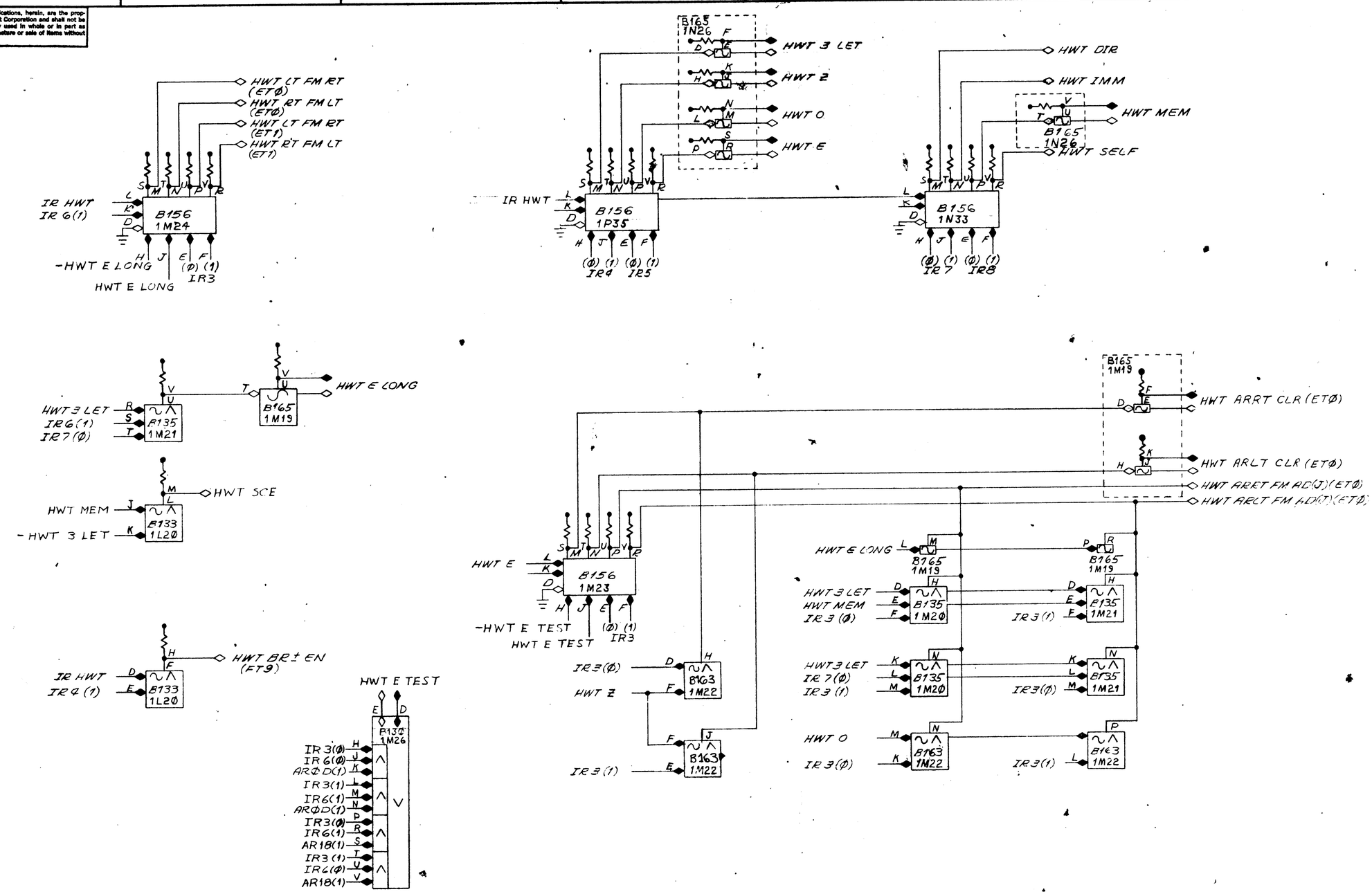

QTY.	DESCRIPTION	PART NO.	ITEM NO.
	PARTS LIST		

UNLESS OTHERWISE SPECIFIED
DIMENSION IN INCHES
TOLERANCES
DECIMALS ± .005 FRACTIONS ± 1/64 ANGLES ± 0°30'
FINAL SURFACE QUALITY ✓
REMOVE BURRS AND BREAK SHARP CORNERS

MATERIAL

FINISH

DRN. Joe Sporea DATE 7/28/66
CHK'D. DATE
ENG. DATE
PROJ. ENG. DATE
PROD. DATE
FIRST USED ON
SCALE
SHEET OF

digital EQUIPMENT CORPORATION
MAYNARD, MASSACHUSETTS

TITLE HALF WORD TRANSFER

SIZE D CODE BS NUMBER D HWT REV. PQ6

DIST.

REVISIONS

CHK.	CHANGE NO.	REV.
	WIRE LISTED 2/23	PQ6

This drawing and specifications, herein, are the property of Digital Equipment Corporation and shall not be reproduced or copied or used in whole or in part as the basis for the manufacture or sale of items without written permission.

NOTE: 1. THIS IS A NOR ('KEY AT INH' STOPS THE TIME CHAIN)

* MODULES ARE OPTIONAL

REV.	CHANGE NO.	CHK
P05	WIRE LISTED 2/23	
P06	REVISED 3/9/67	
P07	REVISED 3/20/67	
P08	REVISED 4/3/67	

QTY.	DESCRIPTION	PART NO.	ITEM NO.

PARTS LIST

DO NOT SCALE DRAWING

UNLESS OTHERWISE SPECIFIED DIMENSION IN INCHES
TOLERANCES
DECIMALS ± .005 FRACTIONS ± 1/64 ANGLES ± 0°30'
FINAL SURFACE QUALITY √
REMOVE BURRS AND BREAK SHARP CORNERS

MATERIAL

FINISH

DRN. A. Yurkstas DATE 11-12-65
CHK'D. DATE
ENG. DATE
PROJ. ENG. DATE
PROD. DATE
FIRST USED ON
SCALE
SHEET OF

digital EQUIPMENT CORPORATION
MAYNARD, MASSACHUSETTS

TITLE INSTRUCTION AND ADDRESS CYCLES

CODE BS SIZE D NUMBER 168-0-IA REV. P08

DIST.

DEC FORM NO.

This drawing and specifications, herein, are the property of Digital Equipment Corporation and shall not be reproduced or copied or used in whole or in part as the basis for the manufacture or sale of items without written permission.

NOTES: 1. * MODULES ARE OPTIONAL
2. GND PINS C,F,J,L,N,R,&U IN ALL W0?? ??

QTY.	DESCRIPTION	PART NO.	ITEM NO.
	PARTS LIST		

UNLESS OTHERWISE SPECIFIED
DIMENSION IN INCHES
TOLERANCES
DECIMALS ±.005 FRACTIONS ±1/64 ANGLES ±0.10
FINAL SURFACE QUALITY
REMOVE BURRS AND BREAK SHARP CORNERS

MATERIAL

FINISH

DRN / DATE
CHKD / DATE
ENG / DATE
PROD ENG / DATE
PROD / DATE
FIRST USED ON
SCALE
SHEET OF

digital EQUIPMENT CORPORATION
MAYNARD, MASSACHUSETTS

TITLE I/O BUS (0-17)

SIZE D CODE FS NUMBER IOB 1 REV

DIST

REVISIONS

CHK	CHANGE NO.	REV.
	WIRE LISTED	
	ECO	

This drawing and specifications, herein, are the property of Digital Equipment Corporation and shall not be reproduced or copied or used in whole or in part as the basis for the manufacture or sale of items without written permission.

NOTES: 1. * MODULES ARE OPTIONAL
2. GND PINS C.F.J.L.N.R.& U

QTY	DESCRIPTION	PART NO.	ITEM NO.

PARTS LIST

UNLESS OTHERWISE SPECIFIED
DIMENSION IN INCHES
TOLERANCES
DECIMALS ±.005 FRACTIONS ±1/64 ANGLES ±0°30'
FINAL SURFACE QUALITY
REMOVE BURRS AND BREAK SHARP CORNERS

MATERIAL

FINISH

DRN. DATE
CHK'D. DATE
ENG. DATE
PROJ ENG DATE
PROD DATE
FIRST USED ON

digital EQUIPMENT CORPORATION MAYNARD, MASSACHUSETTS

TITLE: I/O BUS (18-35)

SIZE: D CODE: FJ NUMBER: IOB-2 REV.: P07

SCALE
SHEET OF

This drawing and specifications, herein, are the property of Digital Equipment Corporation and shall not be reproduced or copied or used in whole or in part as the basis for the manufacture or sale of items without written permission.

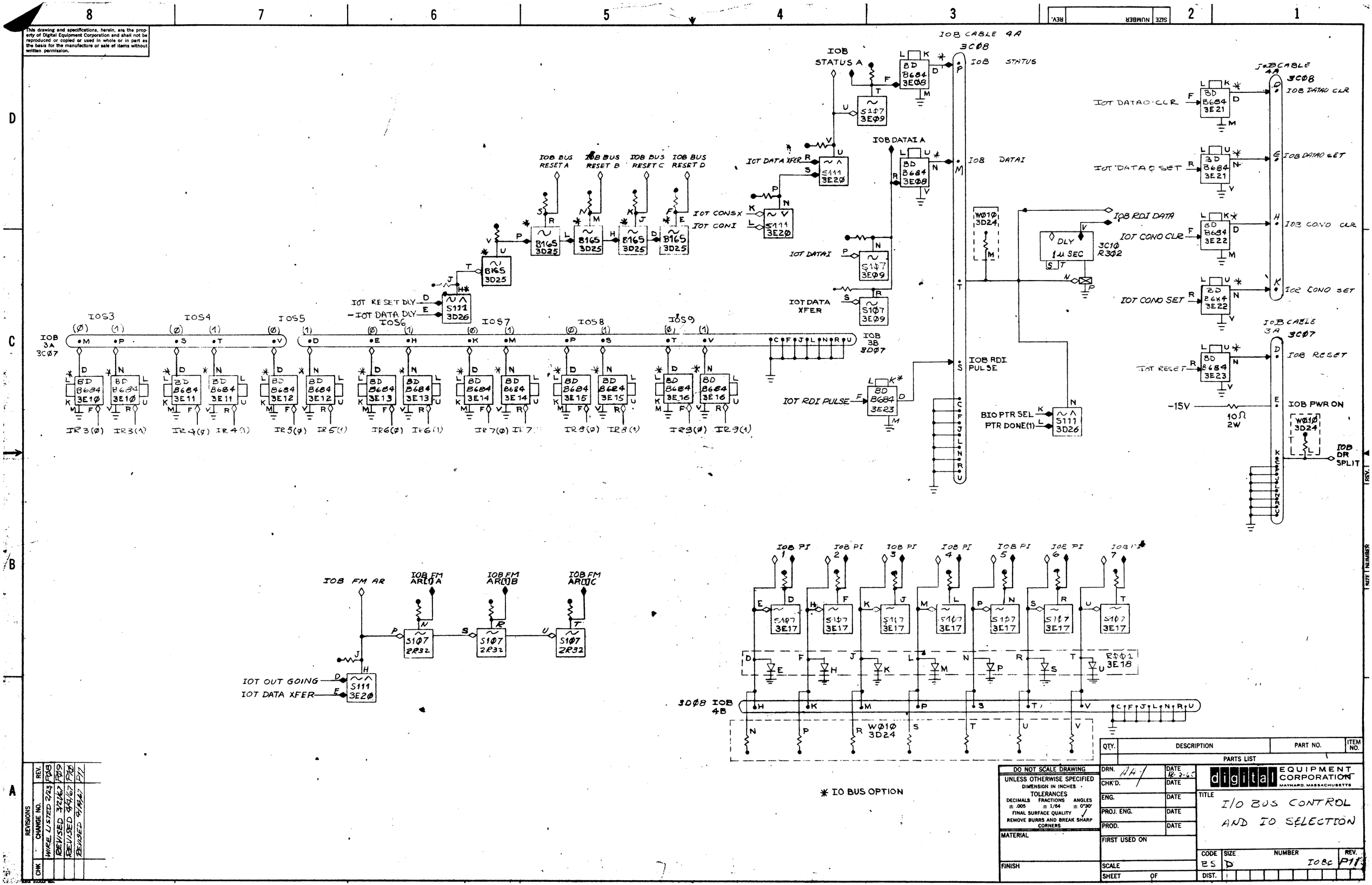

QTY.	DESCRIPTION	PART NO.	ITEM NO.

PARTS LIST

DO NOT SCALE DRAWING

UNLESS OTHERWISE SPECIFIED
DIMENSION IN INCHES
TOLERANCES
DECIMALS ± .005 FRACTIONS ± 1/64 ANGLES ± 0°30'
FINAL SURFACE QUALITY
REMOVE BURRS AND BREAK SHARP CORNERS

MATERIAL

FINISH

		DATE
DRN.	HH	12-2-67
CHK'D.		
ENG.		
PROJ. ENG.		
PROD.		

FIRST USED ON

SCALE

SHEET OF

digital EQUIPMENT CORPORATION
MAYNARD, MASSACHUSETTS

TITLE I/O BUS CONTROL AND IO SELECTION

CODE	SIZE	NUMBER	REV.
BS	D	IOBC	P11

DIST.

REVISIONS

CHK	CHANGE NO.	REV.
	WIRE LISTED 2/23	P08
	REVISED 3/21/67	P09
	REVISED 4/4/67	P10
	REVISED 9/14/67	P11

This drawing and specifications, herein, are the property of Digital Equipment Corporation and shall not be reproduced or copied or used in whole or in part as the basis for the manufacture or sale of items without written permission.

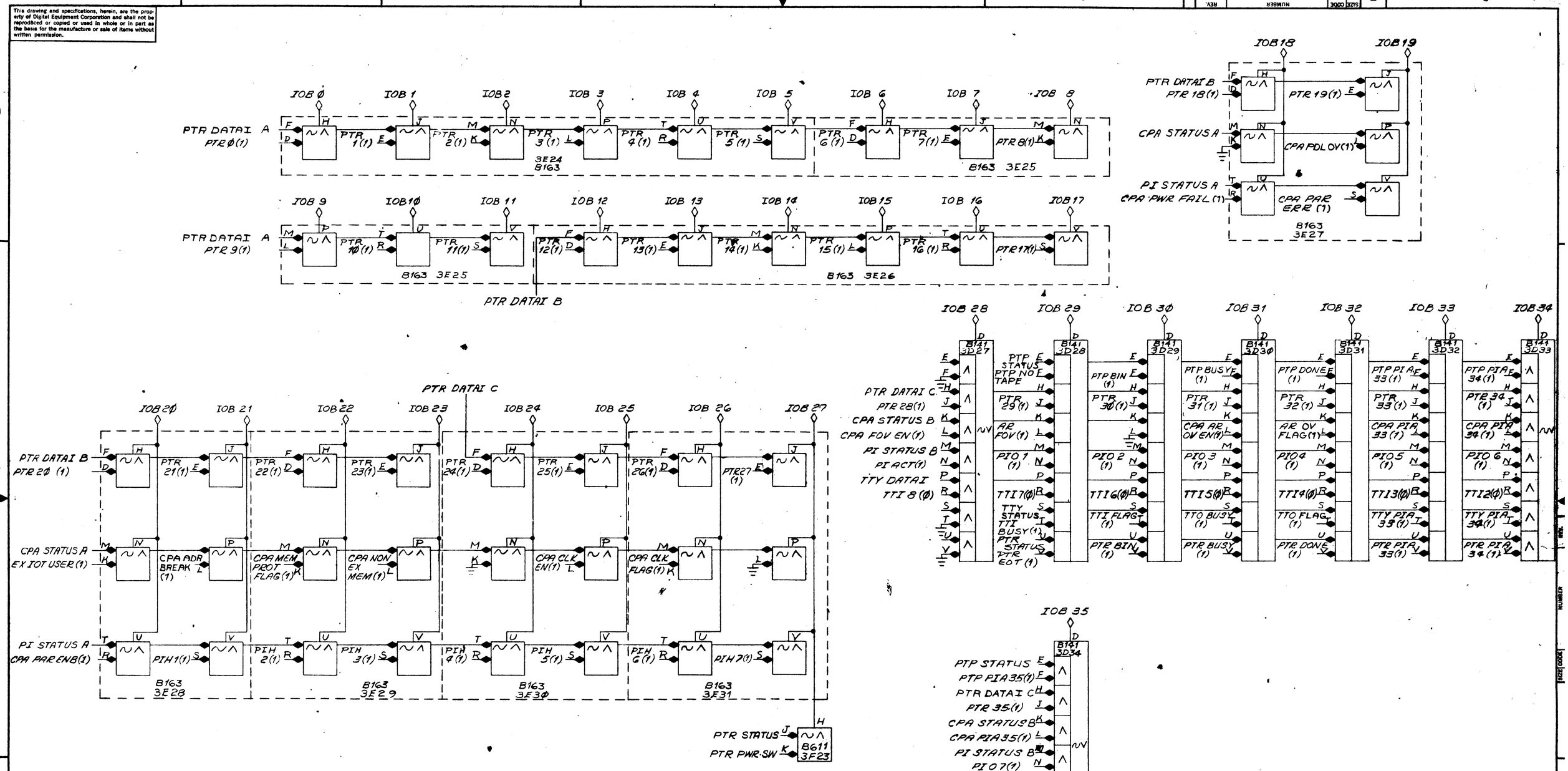

REVISIONS		
CHK.	CHANGE NO.	REV.
	WARE LISTED 2/23	PØ5
	REVISED 3/9/67	PØ6
	REVISED 4/3/67	PØ7

QTY.	DESCRIPTION	PART NO.	ITEM NO.
	PARTS LIST		

UNLESS OTHERWISE SPECIFIED
UNLESS OTHERWISE SPECIFIED
DIMENSION IN INCHES
TOLERANCES
DECIMALS ± .005 FRACTIONS ± 1/64 ANGLES ± 0°30'
FINAL SURFACE QUALITY ✓
REMOVE BURRS AND BREAK SHARP CORNERS

MATERIAL

FINISH

DRN. Kapsea DATE 8/20/66
CHK'D DATE
ENG. DATE
PROJ. ENG. DATE
PROD. DATE
FIRST USED ON
SCALE
SHEET OF

digital EQUIPMENT CORPORATION
MAYNARD, MASSACHUSETTS

TITLE
IOB INPUTS

SIZE	CODE	NUMBER	REV.
D	BS	KA 1Ø IOBI	PØ7

DIST.

This drawing and specifications, herein, are the property of Digital Equipment Corporation and shall not be reproduced or copied or used in whole or in part as the basis for the manufacture or sale of items without written permission.

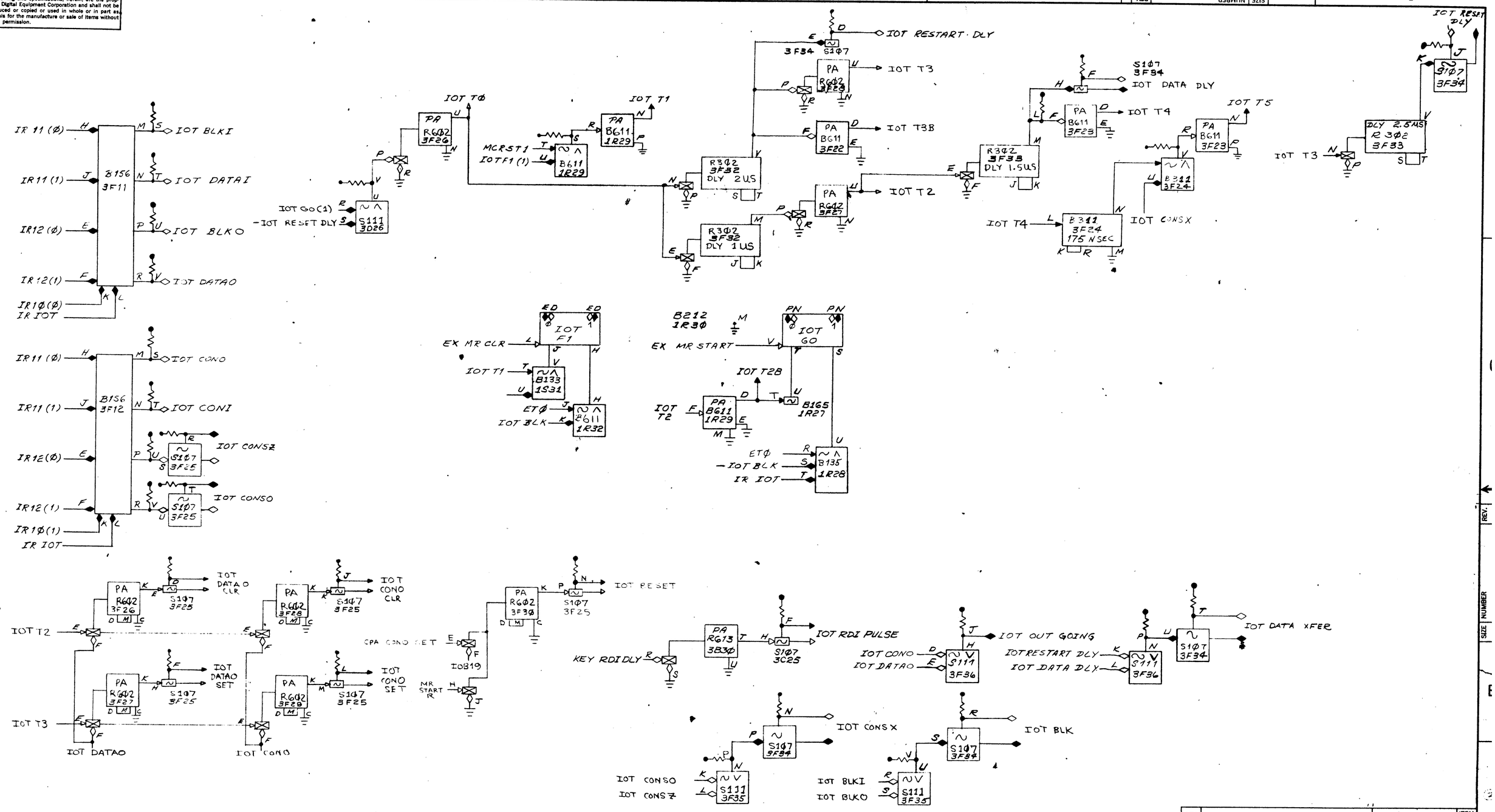

NOTE:
ALL RGØ2'S ON THIS DIAGRAM MUST BE TESTED FOR 4ØØ NSEC PULSES (±5Ø NSEC)

REVISIONS			
CHK.	CHANGE NO.		REV.
	WIRE LISTED 2/23		PØ8
	REVISED 3/9/67		PØ9
	REVISED 4/4/67		PØ

QTY.	DESCRIPTION	PART NO.	ITEM NO.
	PARTS LIST		

DO NOT SCALE DRAWING

UNLESS OTHERWISE SPECIFIED
DIMENSION IN INCHES
TOLERANCES
DECIMALS ± .005 FRACTIONS ± 1/64 ANGLES ± 0°30'
FINAL SURFACE QUALITY
REMOVE BURRS AND BREAK SHARP CORNERS

MATERIAL

FINISH

DRN. GB	DATE 11/30/65	digital EQUIPMENT CORPORATION MAYNARD, MASSACHUSETTS
CHK'D.	DATE	
ENG.	DATE	TITLE IN-OUT TRANSFER CONTROL
PROJ. ENG.	DATE	
PROD.	DATE	
FIRST USED ON		
SCALE		CODE BS SIZE D NUMBER IOT REV. PØ
SHEET OF		DIST.

DEC FORM NO. DRD 102

This drawing and specifications, herein, are the property of Digital Equipment Corporation and shall not be reproduced or copied or used in whole or in part as the basis for the manufacture or sale of items without written permission.

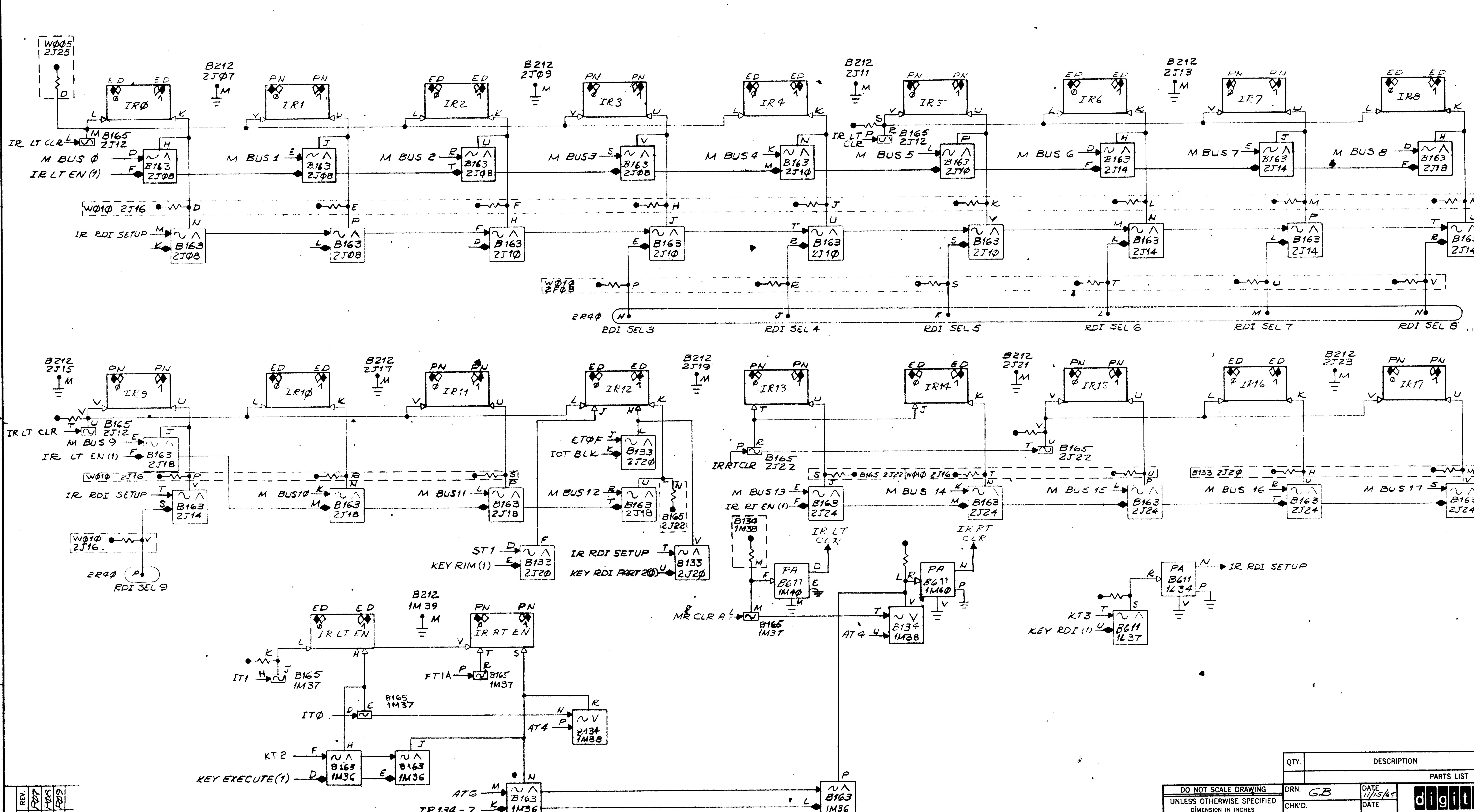

REV.	CHANGE NO.	CHK
P07	WIRE LISTED 2/23	
P08	REVISED 3/9/67	
P09	REVISED 4/1/67	

REVISIONS

DO NOT SCALE DRAWING

UNLESS OTHERWISE SPECIFIED DIMENSION IN INCHES
TOLERANCES
DECIMALS ± .005 FRACTIONS ± 1/64 ANGLES ± 0°30'
FINAL SURFACE QUALITY √
REMOVE BURRS AND BREAK SHARP CORNERS

MATERIAL

FINISH

QTY.	DESCRIPTION	PART NO.	ITEM NO.

PARTS LIST

DRN. GB DATE 11/15/65
CHK'D. DATE
ENG. DATE
PROJ. ENG. DATE
PROD. DATE
FIRST USED ON
SCALE
SHEET OF

digital EQUIPMENT CORPORATION MAYNARD, MASSACHUSETTS

TITLE
INSTRUCTION REGISTER

CODE BS SIZE D NUMBER D-168-0-IR REV. P09

DIST.

This drawing and specifications, herein, are the property of Digital Equipment Corporation and shall not be reproduced or copied or used in whole or in part as the basis for the manufacture or sale of items without written permission.

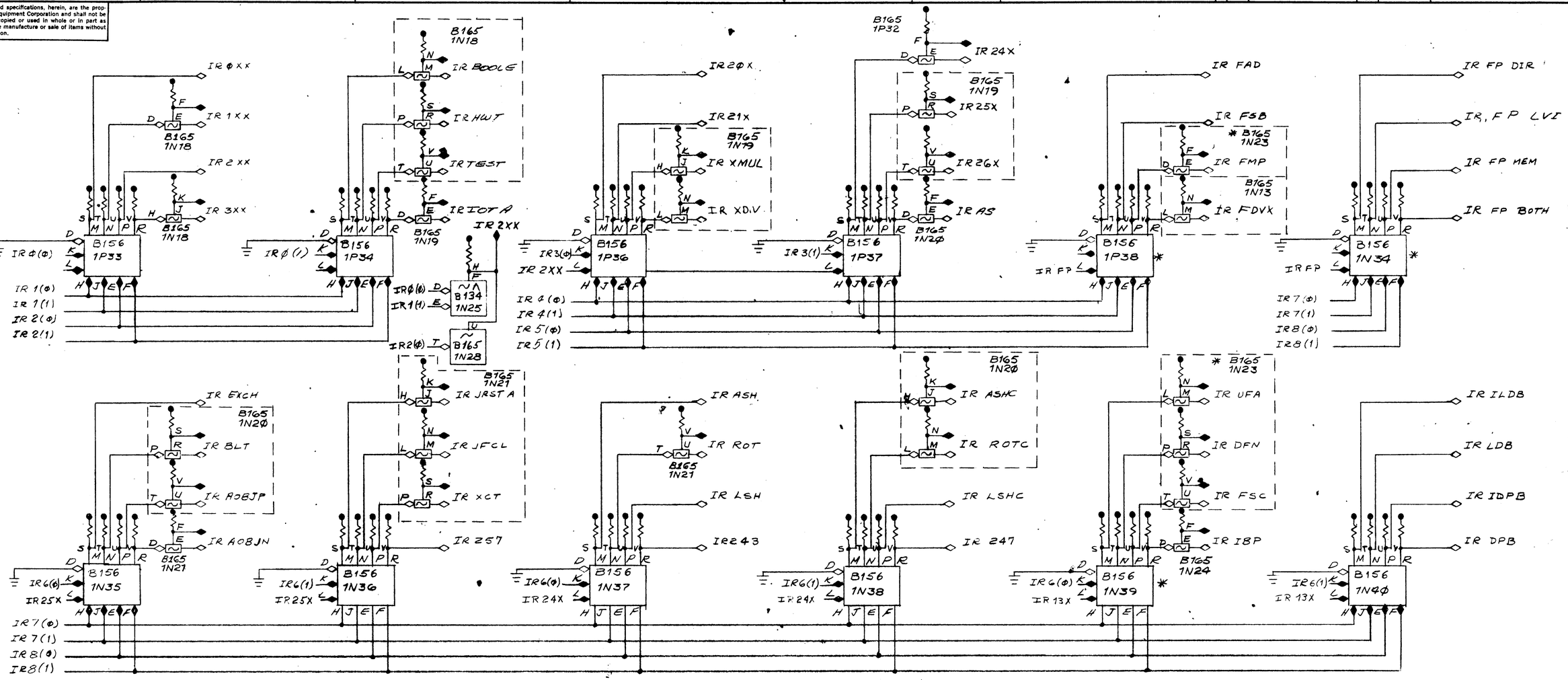

* MODULES ARE OPTIONAL

QTY.	DESCRIPTION	PART NO.	ITEM NO.
	PARTS LIST		

DO NOT SCALE DRAWING

UNLESS OTHERWISE SPECIFIED
DIMENSION IN INCHES
TOLERANCES
DECIMALS ± .005 FRACTIONS ± 1/64 ANGLES ± 0°30'
FINAL SURFACE QUALITY ✓
REMOVE BURRS AND BREAK SHARP CORNERS

MATERIAL

FINISH

DRN.	RAJ	DATE 12-13-65
CHK'D.		DATE
ENG.		DATE
PROJ. ENG.		DATE
PROD.		DATE
FIRST USED ON		
SCALE		
SHEET	OF	

digital EQUIPMENT CORPORATION
MAYNARD, MASSACHUSETTS

TITLE
IR DECODING

CODE	SIZE	NUMBER	REV.
BS	D	IR1	P06

DIST.

REVISIONS			
CHK.	CHANGE NO.	WIRE LISTED 2/23	REV. P06

DEC FORM NO.

This drawing and specifications, herein, are the property of Digital Equipment Corporation and shall not be reproduced or copied or used in whole or in part as the basis for the manufacture or sale of items without written permission.

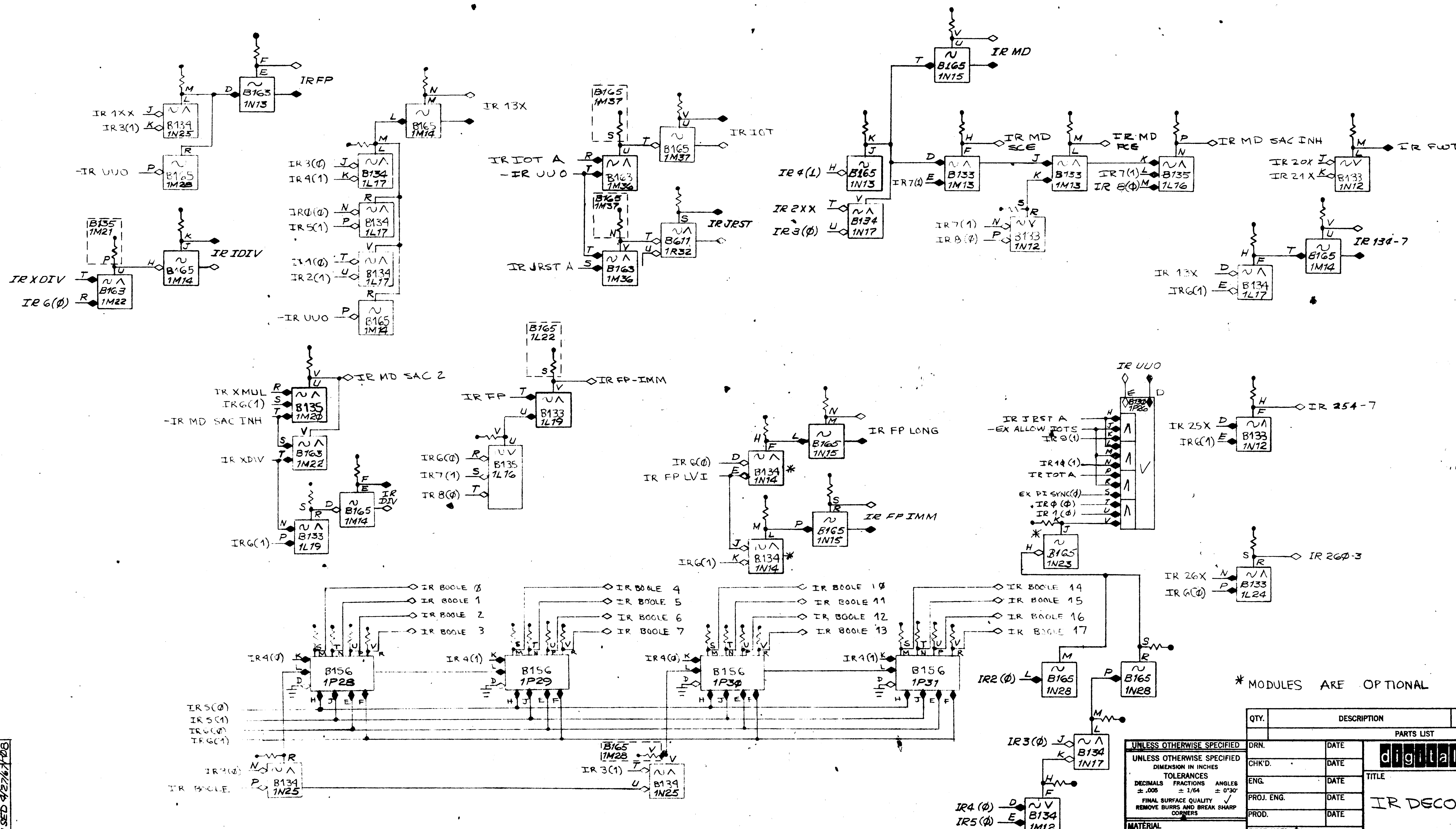

* MODULES ARE OPTIONAL

REVISIONS		
CHK.	CHANGE NO.	REV.
	WIRE LISTED 2/23	PØ7
	REVISED 4/27/67	PØ8

QTY.	DESCRIPTION	PART NO.	ITEM NO.
	PARTS LIST		

UNLESS OTHERWISE SPECIFIED
UNLESS OTHERWISE SPECIFIED
DIMENSION IN INCHES
TOLERANCES
DECIMALS ± .005 FRACTIONS ± 1/64 ANGLES ± 0°30'
FINAL SURFACE QUALITY ✓
REMOVE BURRS AND BREAK SHARP CORNERS

MATERIAL

FINISH

DRN. DATE
CHK'D. DATE
ENG. DATE
PROJ. ENG. DATE
PROD. DATE
FIRST USED ON
SCALE
SHEET OF

digital EQUIPMENT CORPORATION
MAYNARD, MASSACHUSETTS

TITLE
IR DECODING

SIZE D | CODE BS | NUMBER IR2 | REV. PØ8

DIST.

This drawing and specifications, herein, are the property of Digital Equipment Corporation and shall not be reproduced or copied or used in whole or in part as the basis for the manufacture or sale of items without written permission.

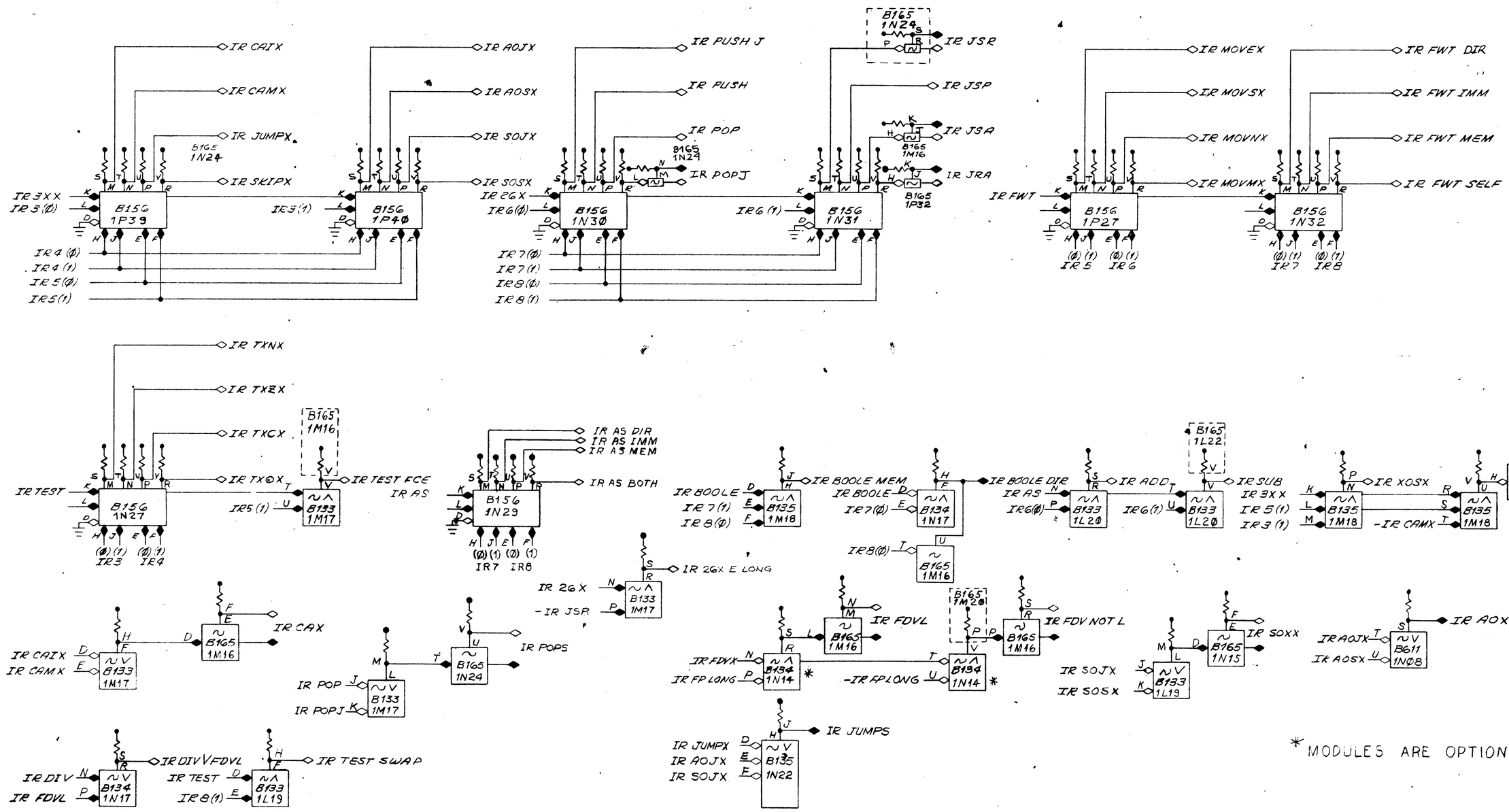

*MODULES ARE OPTIONAL

REVISIONS			
CHK	CHANGE NO.		REV.
	WIRE LISTED 2/27		F03
	REVISED 3/13/67		P04

QTY.	DESCRIPTION	PART NO.	ITEM NO.
	PARTS LIST		

UNLESS OTHERWISE SPECIFIED
UNLESS OTHERWISE SPECIFIED
DIMENSION IN INCHES
TOLERANCES
DECIMALS ± .005 FRACTIONS ± 1/64 ANGLES ± 0°30'
FINAL SURFACE QUALITY √
REMOVE BURRS AND BREAK SHARP CORNERS

MATERIAL

FINISH

DRN. DATE 10/4/66
CHK'D. DATE
ENG. DATE
PROJ. ENG. DATE
PROD. DATE

FIRST USED ON

SCALE

SHEET OF

digital EQUIPMENT CORPORATION
MAYNARD MASSACHUSETTS

TITLE
IR DECODING

SIZE D CODE B5 NUMBER IR3 REV. P04

DIST.

This drawing and specifications, herein, are the property of Digital Equipment Corporation and shall not be reproduced or copied or used in whole or in part as the basis for the manufacture or sale of items without written permission.

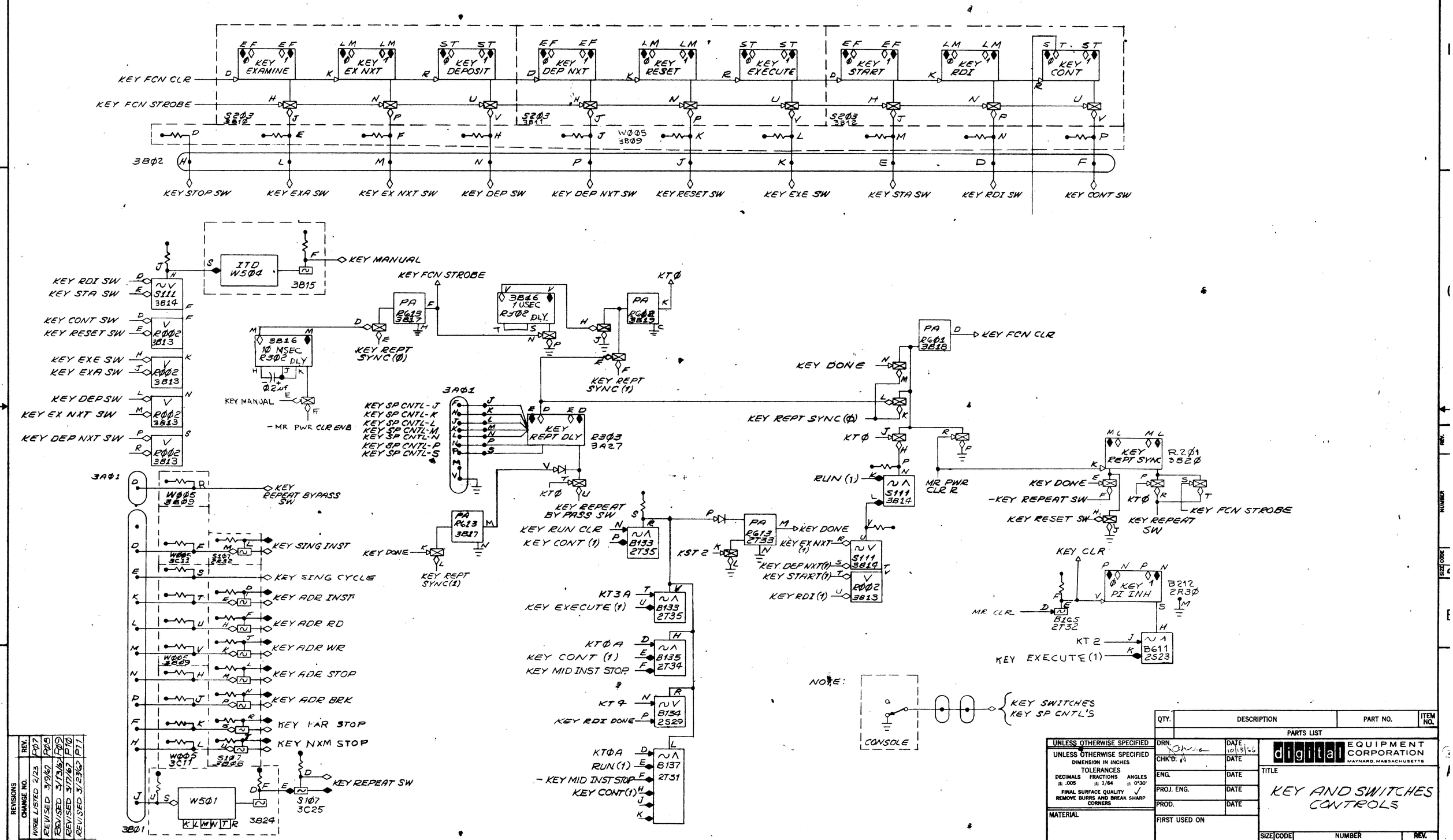

REVISIONS			
CHK	CHANGE NO.		REV.
	WIRE LISTED 2/23	EP07	
	REVISED 3/9/67	PØ6	
	REVISED 3/13/67	PØ9	
	REVISED 3/17/67	P10	
	REVISED 3/23/67	P11	

QTY.	DESCRIPTION	PART NO.	ITEM NO.
	PARTS LIST		

UNLESS OTHERWISE SPECIFIED
UNLESS OTHERWISE SPECIFIED
DIMENSION IN INCHES
TOLERANCES
DECIMALS ± .005 FRACTIONS ± 1/64 ANGLES ± 0°30'
FINAL SURFACE QUALITY ✓
REMOVE BURRS AND BREAK SHARP CORNERS

MATERIAL

FINISH

DRN. DATE 10/13/66
CHK'D. DATE
ENG. DATE
PROJ. ENG. DATE
PROD. DATE
FIRST USED ON
SCALE
SHEET OF

digital EQUIPMENT CORPORATION MAYNARD, MASSACHUSETTS

TITLE KEY AND SWITCHES CONTROLS

SIZE D CODE BS NUMBER KEY 1 REV. P11

DIST.

This drawing and specifications, herein, are the property of Digital Equipment Corporation and shall not be reproduced or copied or used in whole or in part as the basis for the manufacture or sale of items without written permission.

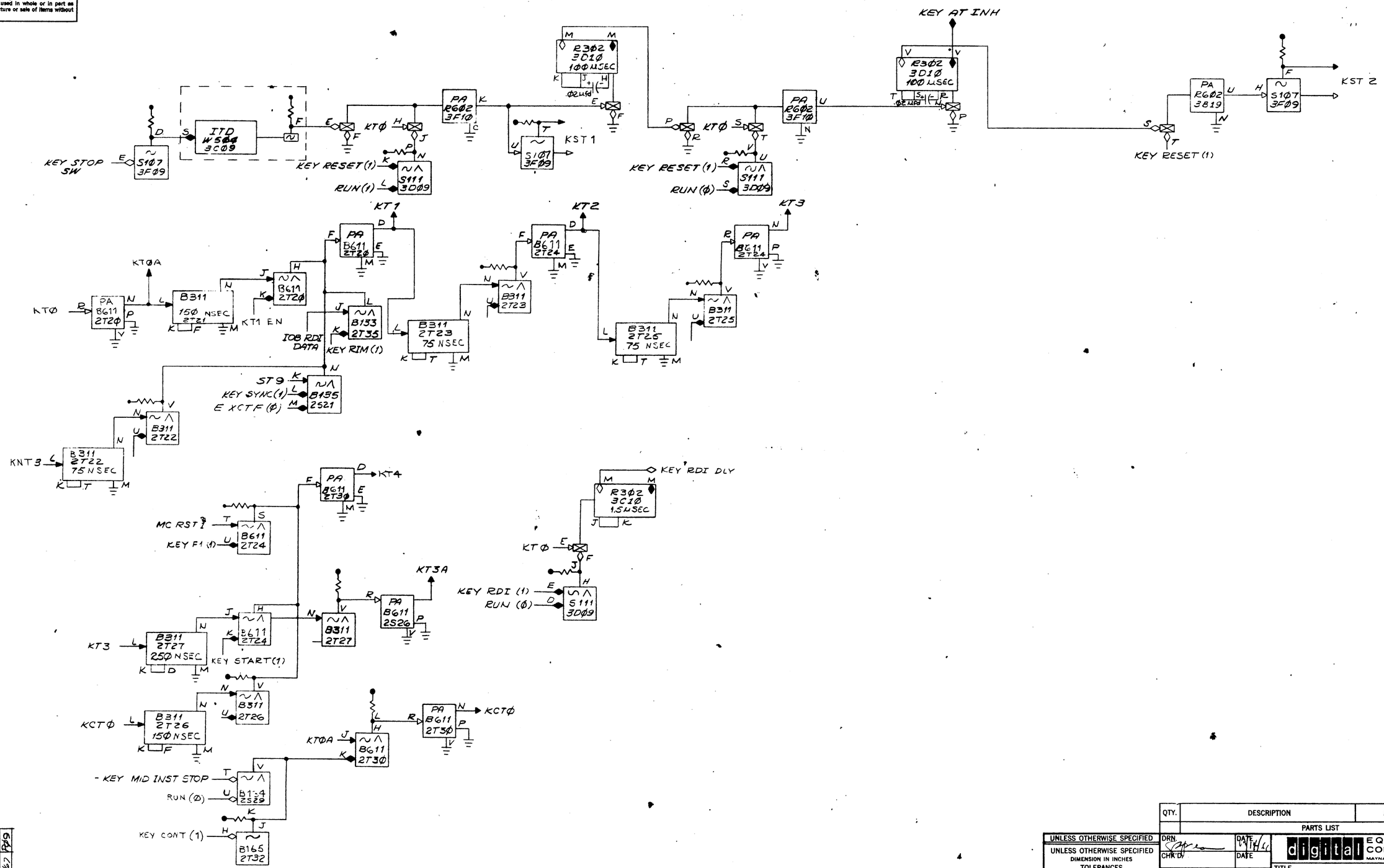

REVISIONS			
CHK	CHANGE NO.		REV.
	WIRE LISTED 2/23		P05
	REVISED 3/13/67		P06
	REVISED 3/17/67		P07
	REVISED 4/3/67		P08
	REVISED 9/14/67		P09

QTY.	DESCRIPTION	PART NO.	ITEM NO.
	PARTS LIST		

UNLESS OTHERWISE SPECIFIED

UNLESS OTHERWISE SPECIFIED
DIMENSION IN INCHES
TOLERANCES
DECIMALS ± .005 FRACTIONS ± 1/64 ANGLES ± 0°30'
FINAL SURFACE QUALITY ✓
REMOVE BURRS AND BREAK SHARP CORNERS

MATERIAL

FINISH

DRN. DATE 11/14/66
CHK'D DATE
ENG. DATE
PROJ. ENG. DATE
PROD. DATE
FIRST USED ON
SCALE
SHEET OF

digital EQUIPMENT CORPORATION
MAYNARD, MASSACHUSETTS

TITLE
KEYS AND SWITCHES CONTROLS

SIZE D | CODE | NUMBER KEY2 | REV. P09
DIST.

This drawing and specifications, herein, are the property of Digital Equipment Corporation and shall not be reproduced or copied or used in whole or in part as the basis for the manufacture or sale of items without written permission.

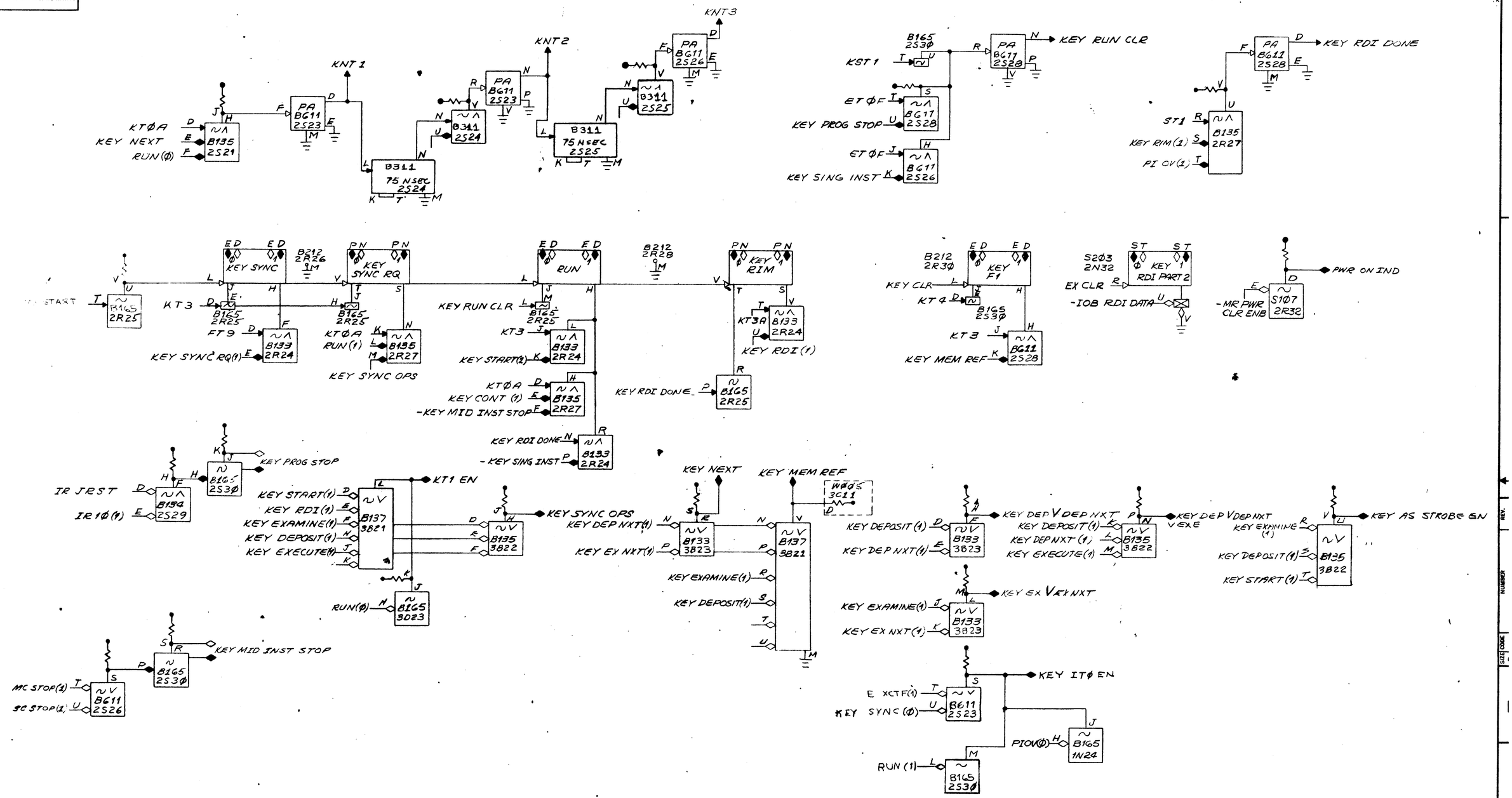

REV.	CHANGE NO.	CHK
P07	WIRE LISTED 2/23	
P08	REVISED 3/17/67	
P09	REVISED 4/7/67	
P10	REVISED 4/4/67	

REVISIONS

QTY.	DESCRIPTION	PART NO.	ITEM NO.
	PARTS LIST		

UNLESS OTHERWISE SPECIFIED
UNLESS OTHERWISE SPECIFIED
DIMENSION IN INCHES
TOLERANCES
DECIMALS ± .005 FRACTIONS ± 1/64 ANGLES ± 0°30'
FINAL SURFACE QUALITY ✓
REMOVE BURRS AND BREAK SHARP CORNERS

MATERIAL

FINISH

DRN. DATE 12/10/66
CHK'D. DATE
ENG. DATE
PROJ. ENG. DATE
PROD. DATE

FIRST USED ON

SCALE

SHEET OF

digital EQUIPMENT CORPORATION
MAYNARD, MASSACHUSETTS

TITLE
KEYS AND SWITCHES CONTROLS

SIZE	CODE	NUMBER	REV.
D	BS	KEY3	P10

DIST

This drawing and specifications, herein, are the property of Digital Equipment Corporation and shall not be reproduced or copied or used in whole or in part as the basis for the manufacture or sale of items without written permission.

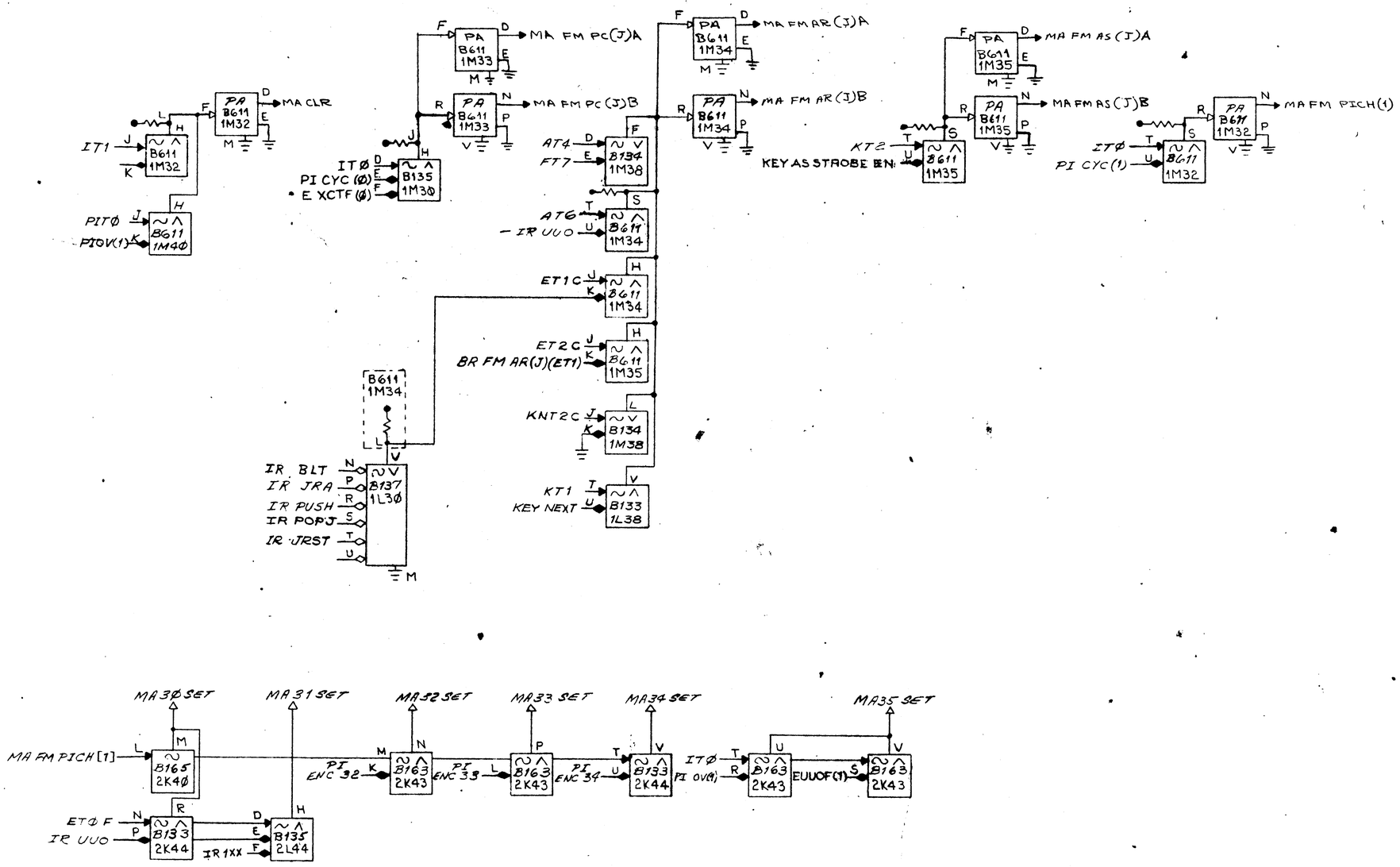

REV.	CHANGE NO.	CHK
FQ17	WIRE LISTED 2/23	
PK6	REVISED 3/14/67	
PD5	REVISED 9/5/67	

REVISIONS

DEC FORM NO.

QTY.	DESCRIPTION	PART NO.	ITEM NO.
	PARTS LIST		

DO NOT SCALE DRAWING

UNLESS OTHERWISE SPECIFIED
DIMENSION IN INCHES
TOLERANCES
DECIMALS ± .005 FRACTIONS ± 1/64 ANGLES ± 0°30'
FINAL SURFACE QUALITY ✓
REMOVE BURRS AND BREAK SHARP CORNERS

MATERIAL

FINISH

DRN. GB	DATE 11/17/65	digital EQUIPMENT CORPORATION MAYNARD, MASSACHUSETTS
CHK'D.	DATE	
ENG.	DATE	TITLE MA CONTROL
PROJ. ENG.	DATE	
PROD.	DATE	
FIRST USED ON		CODE BS · SIZE D · NUMBER D-168-0-MA1 · REV. PD5
SCALE		
SHEET OF		DIST.

This drawing and specifications, herein, are the property of Digital Equipment Corporation and shall not be reproduced or copied or used in whole or in part as the basis for the manufacture or sale of items without written permission.

QTY.	DESCRIPTION	PART NO.	ITEM NO.

PARTS LIST

UNLESS OTHERWISE SPECIFIED
DIMENSION IN INCHES
TOLERANCES
DECIMALS ±.005 FRACTIONS ± 1/64 ANGLES ± 0°30'
FINAL SURFACE QUALITY √
REMOVE BURRS AND BREAK SHARP CORNERS

MATERIAL

FINISH

DRN. | DATE
CHKD. | DATE
ENG. | DATE
PROJ. ENG. | DATE
PROD. | DATE
FIRST USED ON

digital EQUIPMENT CORPORATION MAYNARD, MASSACHUSETTS

TITLE: MA REGISTER

SIZE: D CODE: BS NUMBER: MA2 REV.

SCALE
SHEET OF
DIST.

This drawing and specifications, herein, are the property of Digital Equipment Corporation and shall not be reproduced or copied or used in whole or in part as the basis for the manufacture or sale of items without written permission.

REV.	CHANGE NO.	CHK.
P06	WIRE LISTED 2/23	
P07	REVISED 3/14/67	
P08	REVISED 3/23/67	
P09	REVISED 4/5/67	
P10	REVISED 5/13/67	

QTY.	DESCRIPTION	PART NO.	ITEM NO.

PARTS LIST

DO NOT SCALE DRAWING

UNLESS OTHERWISE SPECIFIED
DIMENSION IN INCHES
TOLERANCES
DECIMALS ±.005 FRACTIONS ±1/64 ANGLES ±0°30'
FINAL SURFACE QUALITY ✓
REMOVE BURRS AND BREAK SHARP CORNERS

MATERIAL

FINISH

DRN. AAY DATE 12-7-65
CHK'D. DATE
ENG. DATE
PROJ. ENG. DATE
PROD. DATE
FIRST USED ON

digital EQUIPMENT CORPORATION MAYNARD, MASSACHUSETTS

TITLE
MEMORY ADDRESS INTERFACE

CODE BS SIZE D NUMBER MAI REV. P10

SCALE
SHEET OF
DIST.

This drawing and specifications, herein, are the property of Digital Equipment Corporation and shall not be reproduced or copied or used in whole or in part as the basis for the manufacture or sale of items without written permission.

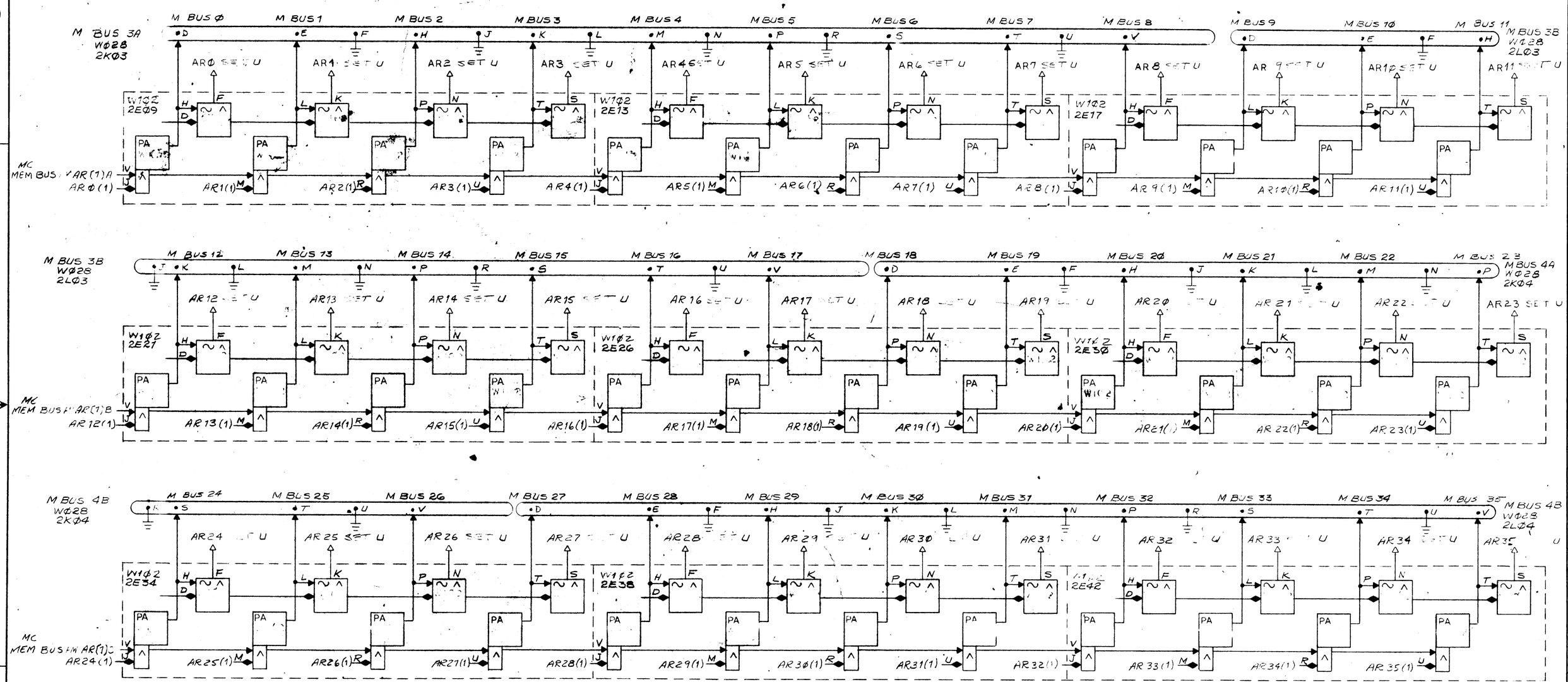

NOTE:
WØ28 MEM. BUS CABLE PIN C, F, J, L, N, R, U WILL BE GROUNDED

QTY.	DESCRIPTION	PART NO.	ITEM NO.

PARTS LIST

DO NOT SCALE DRAWING
UNLESS OTHERWISE SPECIFIED
DIMENSION IN INCHES
TOLERANCES
DECIMALS ± .005 FRACTIONS ± 1/64 ANGLES ± 0°30'
FINAL SURFACE QUALITY ✓
REMOVE BURRS AND BREAK SHARP CORNERS

MATERIAL

FINISH

DRN.		DATE 10-19-65
CHK'D.		DATE
ENG.		DATE
PROJ. ENG.		DATE
PROD.		DATE
FIRST USED ON		
SCALE		
SHEET	OF	

digital EQUIPMENT CORPORATION
MAYNARD, MASSACHUSETTS

TITLE
MEMORY BUS
DATA INTERFACE

CODE	SIZE	NUMBER	REV.
BS	D	D-168-0-MBDI	PØ5

DIST.

REVISIONS		
CHK	CHANGE NO.	REV.

This drawing and specifications, herein, are the property of Digital Equipment Corporation and shall not be reproduced or copied or used in whole or in part as the basis for the manufacture or sale of items without written permission.

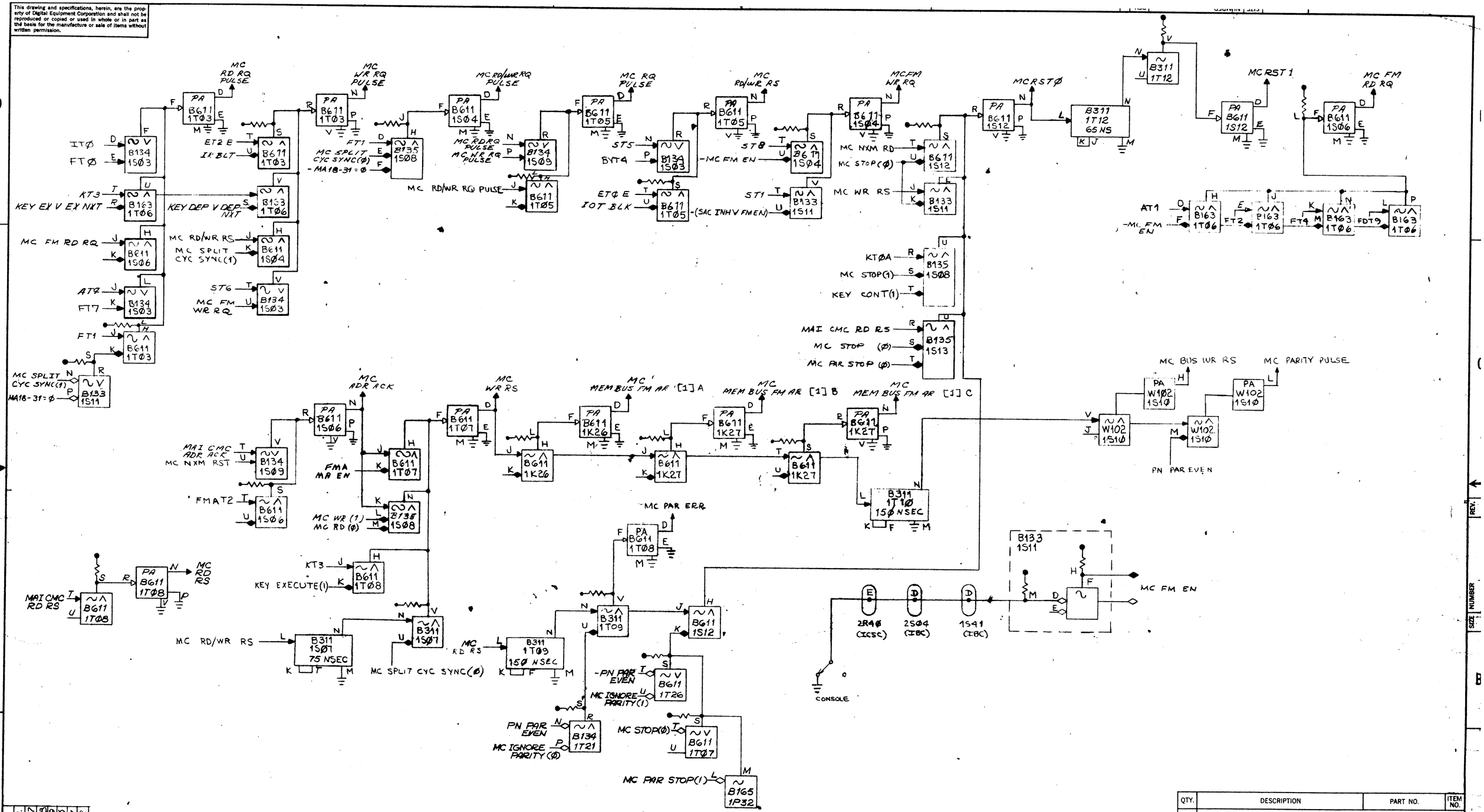

REVISIONS			
CHK	CHANGE NO.		REV.
	WARE LISTED 2/23		P07
	REVISED 3/10/67		P08
	REVISED 3/14/67		P09
	REVISED 3/22/67		P10
	REVISED 4/11/67		P11
	REVISED 5/1/67		P12

DEC FORM NO. DRO 102

QTY.	DESCRIPTION	PART NO.	ITEM NO.
	PARTS LIST		

DO NOT SCALE DRAWING

UNLESS OTHERWISE SPECIFIED
DIMENSION IN INCHES
TOLERANCES
DECIMALS ± .005 FRACTIONS ± 1/64 ANGLES ± 0°30'
FINAL SURFACE QUALITY √
REMOVE BURRS AND BREAK SHARP CORNERS

MATERIAL

FINISH

DRN. GB	DATE 12/1/65	digital EQUIPMENT CORPORATION MAYNARD, MASSACHUSETTS
CHK'D.	DATE	
ENG.	DATE	TITLE MEMORY CONTROL
PROJ. ENG.	DATE	
PROD.	DATE	
FIRST USED ON		
SCALE		CODE BS SIZE D NUMBER MC1 REV. P12
SHEET OF		DIST.

This drawing and specifications, herein, are the property of Digital Equipment Corporation and shall not be reproduced or copied or used in whole or in part as the basis for the manufacture or sale of items without written permission.

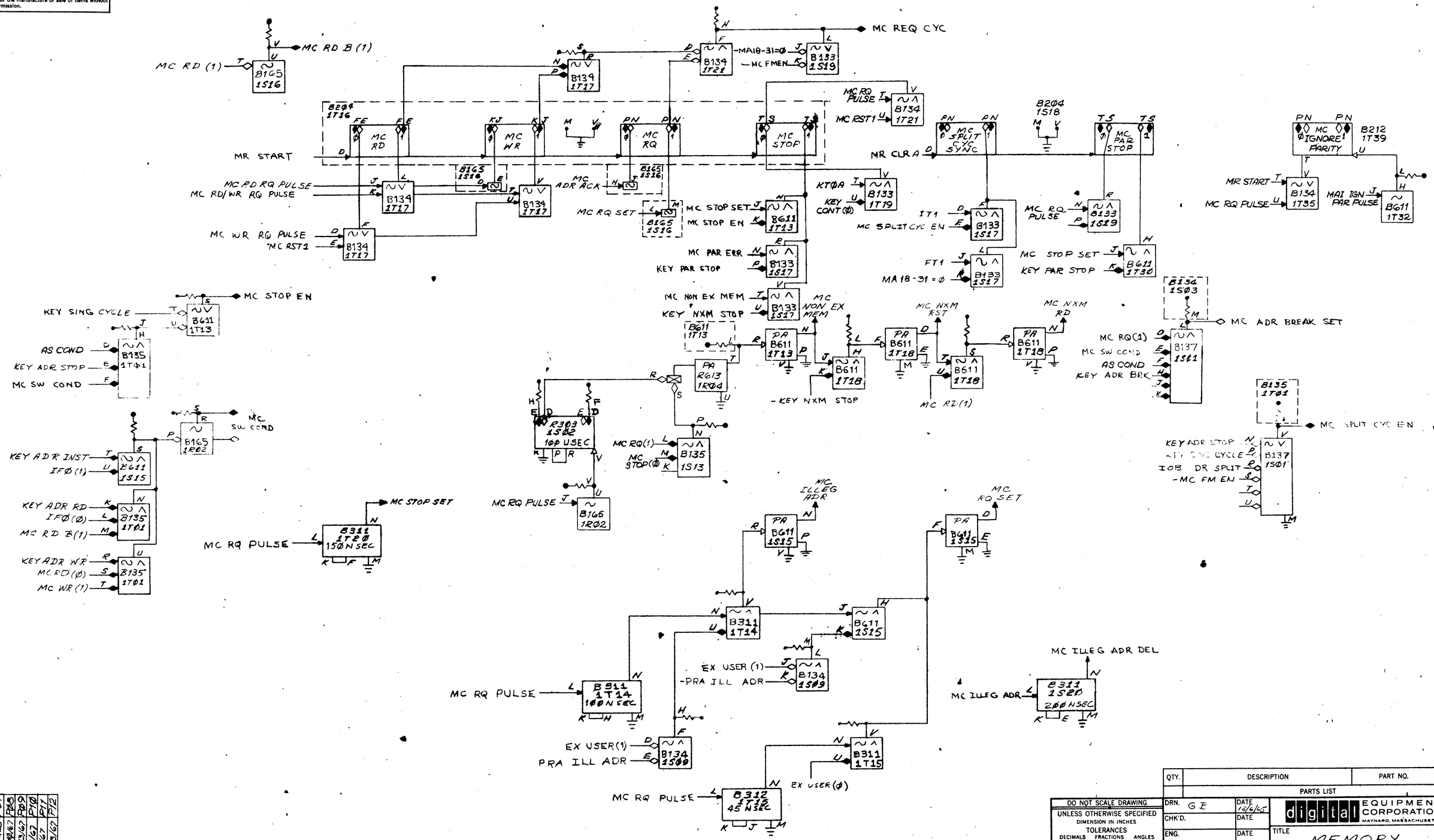

QTY.	DESCRIPTION	PART NO.	ITEM NO.
	PARTS LIST		

DO NOT SCALE DRAWING

UNLESS OTHERWISE SPECIFIED
DIMENSION IN INCHES
TOLERANCES
DECIMALS ± .005 FRACTIONS ± 1/64 ANGLES ± 0°30'
FINAL SURFACE QUALITY
REMOVE BURRS AND BREAK SHARP CORNERS

MATERIAL

FINISH

DRN.	G E	DATE 12/6/65
CHK'D.		DATE
ENG.		DATE
PROJ. ENG.		DATE
PROD.		DATE
FIRST USED ON		
SCALE		
SHEET	OF	

digital EQUIPMENT CORPORATION
MAYNARD, MASSACHUSETTS

TITLE
MEMORY CONTROL

CODE	SIZE	NUMBER	REV.
BS	D	-MC2	P18

DIST.

REVISIONS

CHK	CHANGE NO.	REV.
	WIRE LISTED 2/23	P07
	REVISED 3/10/67	P08
	REVISED 3/23/67	P09
	REVISED 4/7/67	P10
	REVISED 5/1/67	P11
	REVISED 5/13/67	P12

This drawing and specifications, herein, are the property of Digital Equipment Corporation and shall not be reproduced or copied or used in whole or in part as the basis for the manufacture or sale of items without written permission.

QTY.	DESCRIPTION	PART NO.	ITEM NO.

PARTS LIST

UNLESS OTHERWISE SPECIFIED
DIMENSION IN INCHES
TOLERANCES
DECIMALS ±.005 FRACTIONS ±1/64 ANGLES ±0°30'
FINAL SURFACE QUALITY ✓
REMOVE BURRS AND BREAK SHARP CORNERS

MATERIAL

FINISH

DRN. W. Stephenson DATE 3/30/67
CHK'D. J.P.S. DATE 3/31/67
ENG. DATE
PROJ. ENG. DATE
PROD. DATE
FIRST USED ON
SCALE
SHEET OF

digital EQUIPMENT CORPORATION
MAYNARD, MASSACHUSETTS

TITLE

MEMORY INDICATOR

SIZE D CODE BS D NUMBER MI REV. P1Ø

DIST.

REVISIONS	REV.	CHANGE NO.	CHK
	PØ9	REDRAWN 3/30	
	P1Ø	REVISED 4/4/67	

This drawing and specifications, herein, are the property of Digital Equipment Corporation and shall not be reproduced or copied or used in whole or in part as the basis for the manufacture or sale of items without written permission.

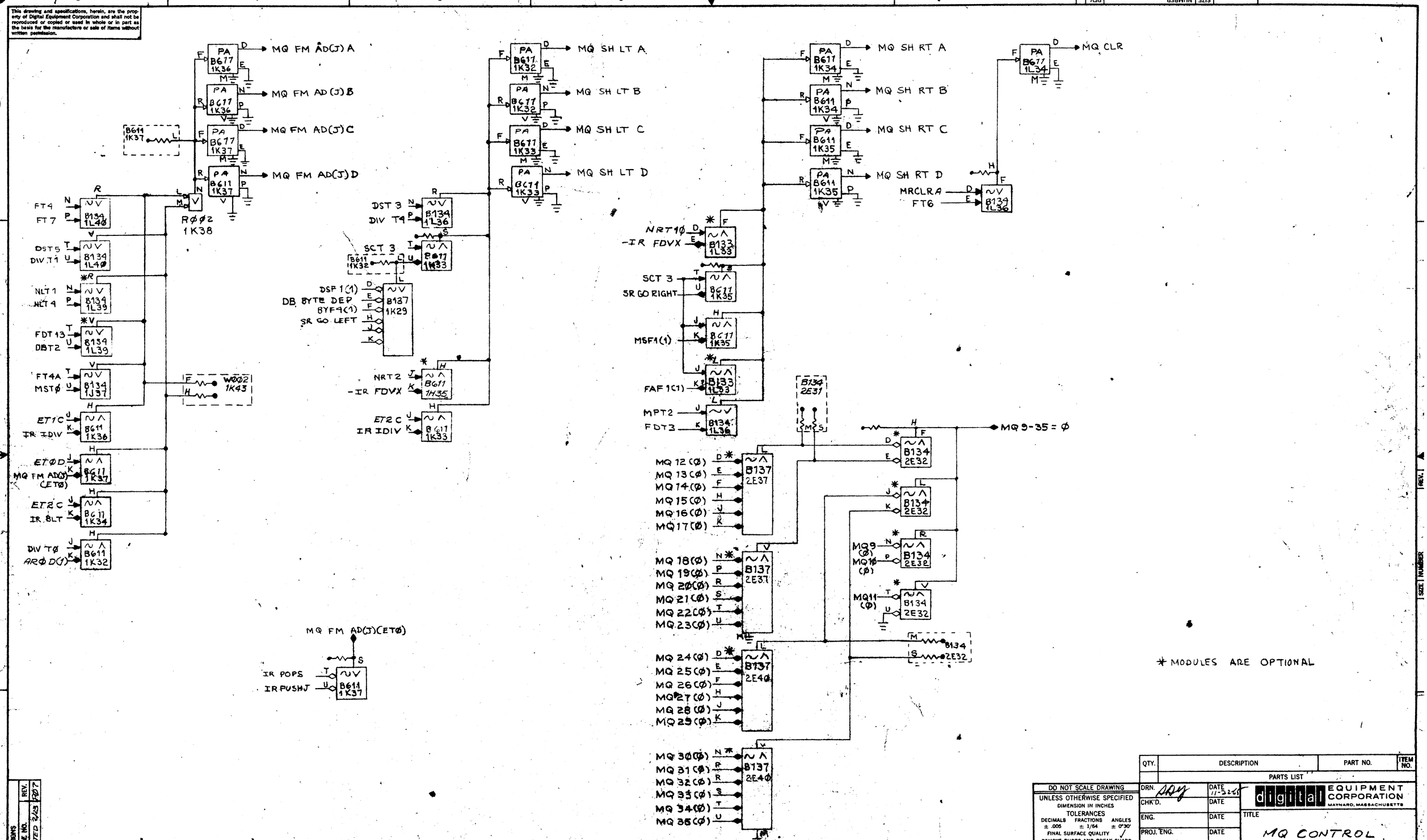

REVISIONS		
CHK.	CHANGE NO.	REV.
	MADE LISTED 2/23	P07

QTY.	DESCRIPTION	PART NO.	ITEM NO.
	PARTS LIST		

DO NOT SCALE DRAWING

UNLESS OTHERWISE SPECIFIED
DIMENSION IN INCHES
TOLERANCES
DECIMALS ± .005 FRACTIONS ± 1/64 ANGLES ± 0°30'
FINAL SURFACE QUALITY ✓
REMOVE BURRS AND BREAK SHARP CORNERS

MATERIAL

FINISH

DRN. ARY	DATE 11-22-65	digital EQUIPMENT CORPORATION MAYNARD, MASSACHUSETTS
CHK'D.	DATE	
ENG.	DATE	TITLE MQ CONTROL
PROJ. ENG.	DATE	
PROD.	DATE	
FIRST USED ON		
SCALE		CODE BS SIZE D NUMBER MQE REV. P07
SHEET OF		DIST.

DEC FORM NO.

This drawing and specifications, herein, are the property of Digital Equipment Corporation and shall not be reproduced or copied or used in whole or in part as the basis for the manufacture or sale of items without written permission.

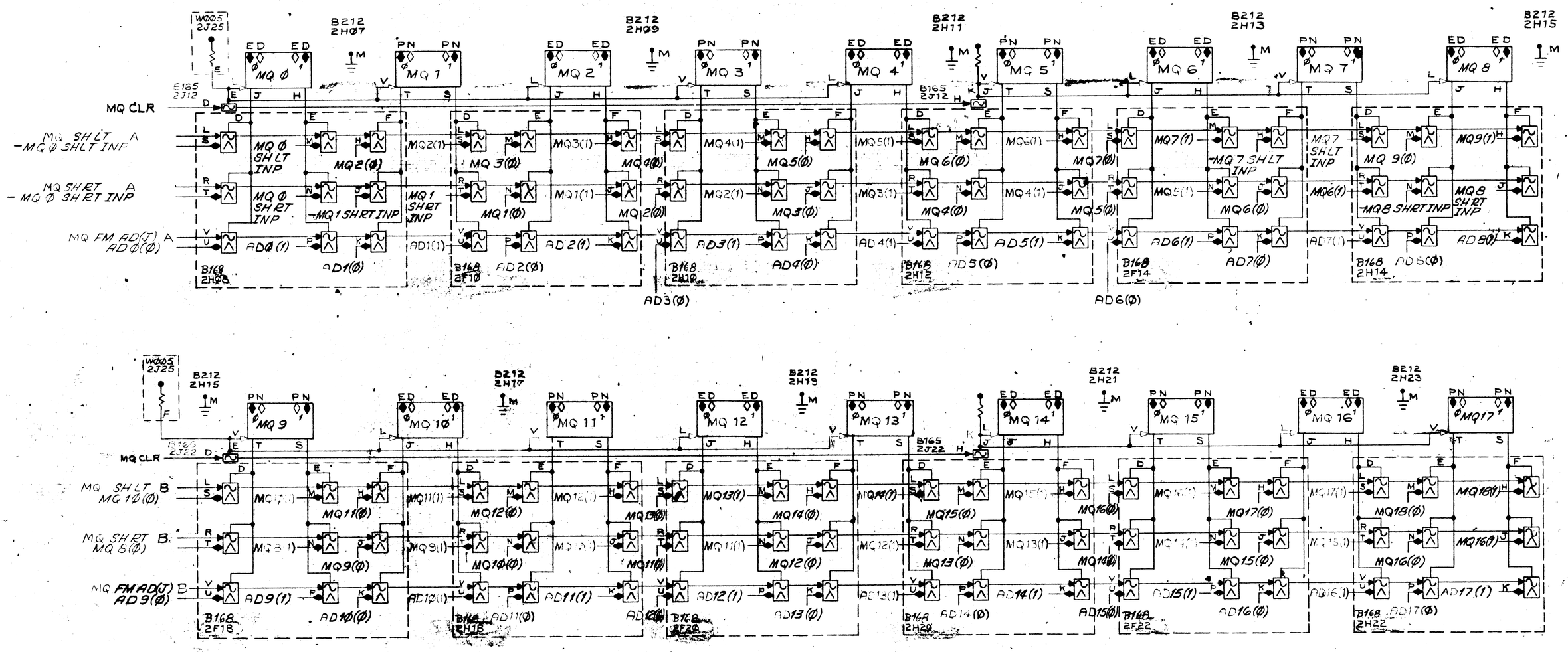

QTY.	DESCRIPTION	PART NO.	ITEM NO.
	PARTS LIST		

UNLESS OTHERWISE SPECIFIED
DIMENSION IN INCHES
TOLERANCES
DECIMALS ± .005 FRACTIONS ± 1/64 ANGLES ± 0°30'
FINAL SURFACE QUALITY ✓
REMOVE BURRS AND BREAK SHARP CORNERS

MATERIAL

FINISH

DRN. Joe Ojeda DATE 8/19/66
CHK'D DATE
ENG. DATE
PROJ. ENG. DATE
PROD. DATE
FIRST USED ON
SCALE
SHEET OF

digital EQUIPMENT CORPORATION MAYNARD, MASSACHUSETTS

TITLE
MULTIPLIER QUOTIENT
(MQ Ø-17)

SIZE D CODE B5 NUMBER MQ2 REV. PØ7
DIST.

REVISIONS
REV. | CHANGE NO. | CHK
PØ7 | WHEE LISTED 2/23

This drawing and specifications, herein, are the property of Digital Equipment Corporation and shall not be reproduced or copied or used in whole or in part as the basis for the manufacture or sale of items without written permission.

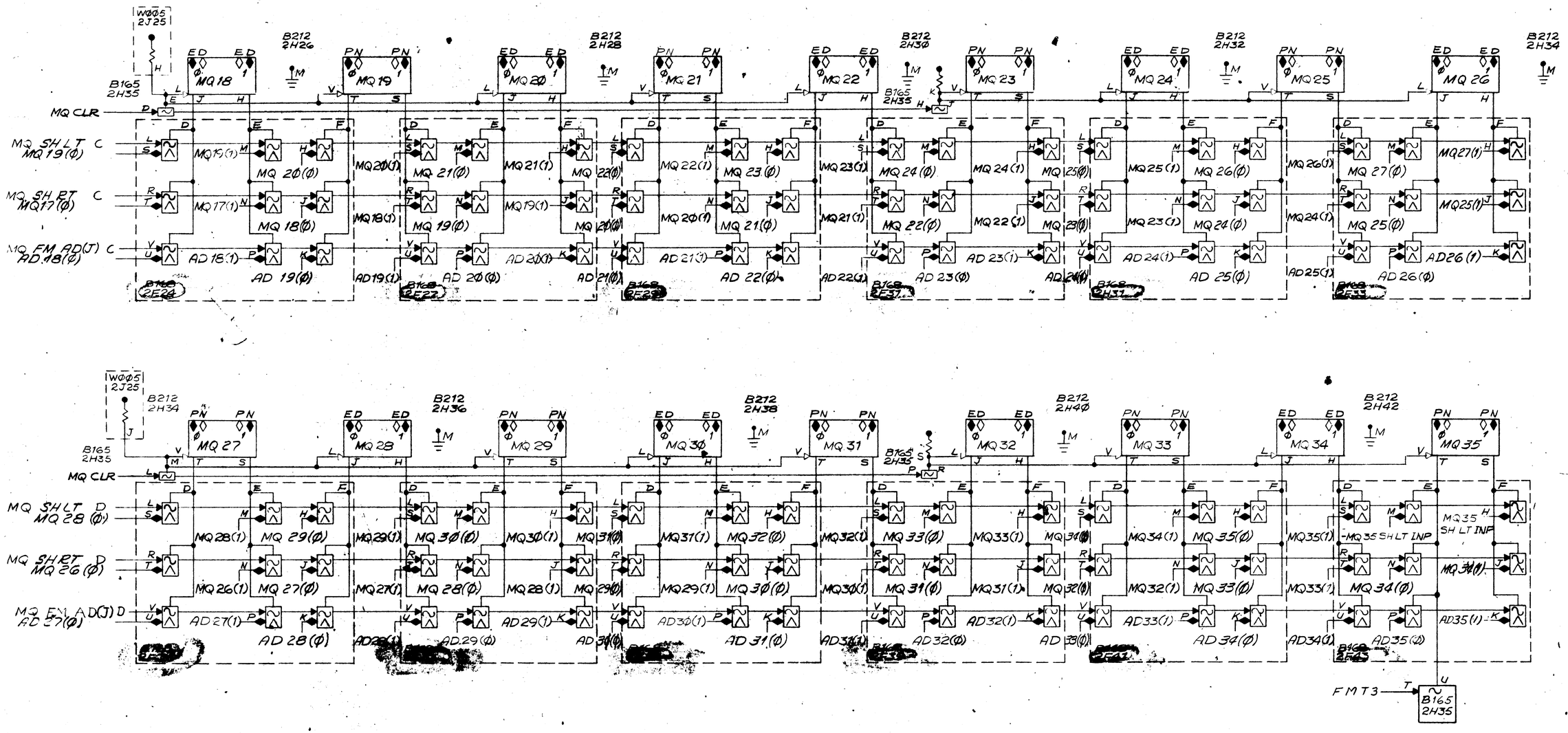

QTY.	DESCRIPTION	PART NO.	ITEM NO.
	PARTS LIST		

UNLESS OTHERWISE SPECIFIED
DIMENSION IN INCHES
TOLERANCES
DECIMALS ± .005 FRACTIONS ± 1/64 ANGLES ± 0°30'
FINAL SURFACE QUALITY ✓
REMOVE BURRS AND BREAK SHARP CORNERS

MATERIAL

FINISH

DRN. Joe Ayers	DATE 8/19/66	digital EQUIPMENT CORPORATION MAYNARD, MASSACHUSETTS
CHK'D	DATE	
ENG.	DATE	TITLE MULTIPLIER QUOTIENT (MQ 18-35)
PROJ. ENG.	DATE	
PROD.	DATE	
FIRST USED ON		SIZE D CODE B5 NUMBER 168-0-MQ3 REV. PØ7
SCALE		
SHEET OF		DIST.

REVISIONS

CHK	CHANGE NO.	REV.
	WIRE LISTED 2/25	PØ7

This drawing and specifications, herein, are the property of Digital Equipment Corporation and shall not be reproduced or copied or used in whole or in part as the basis for the manufacture or sale of items without written permission.

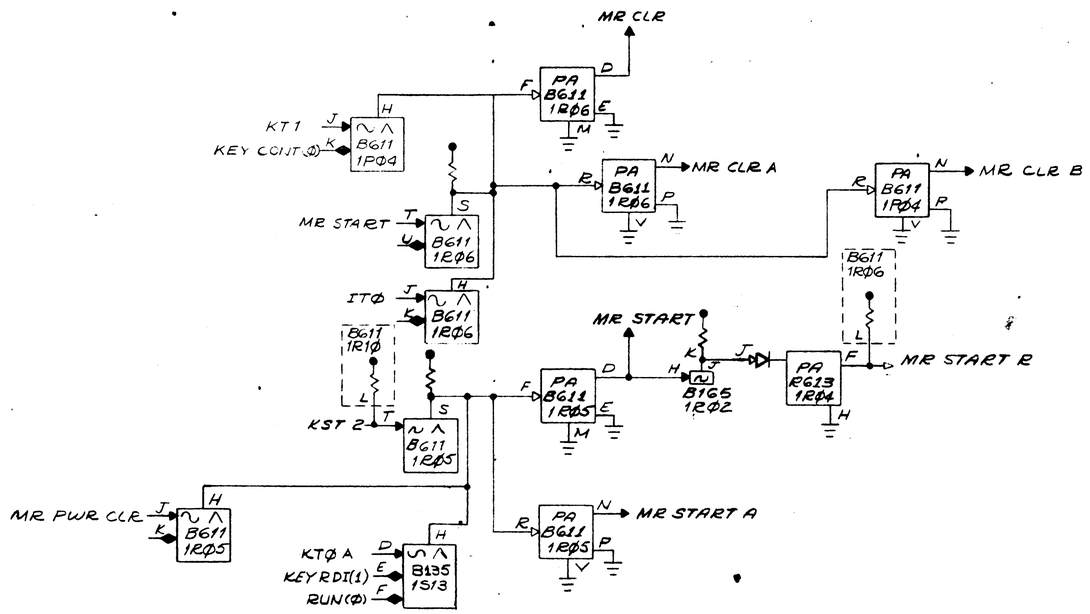

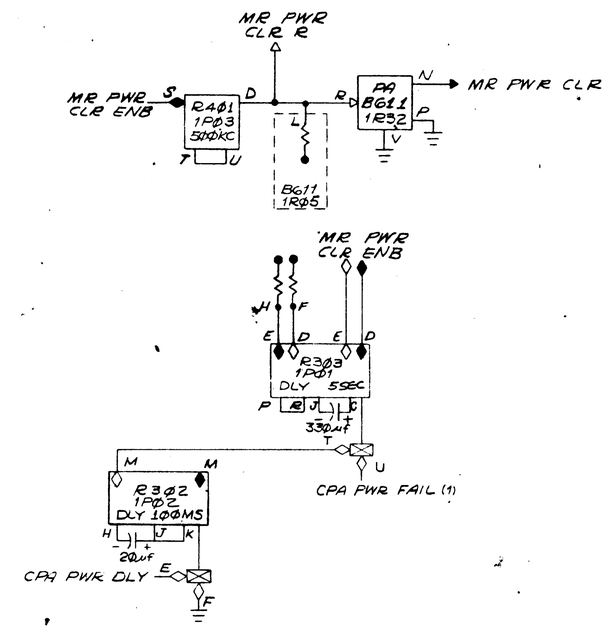

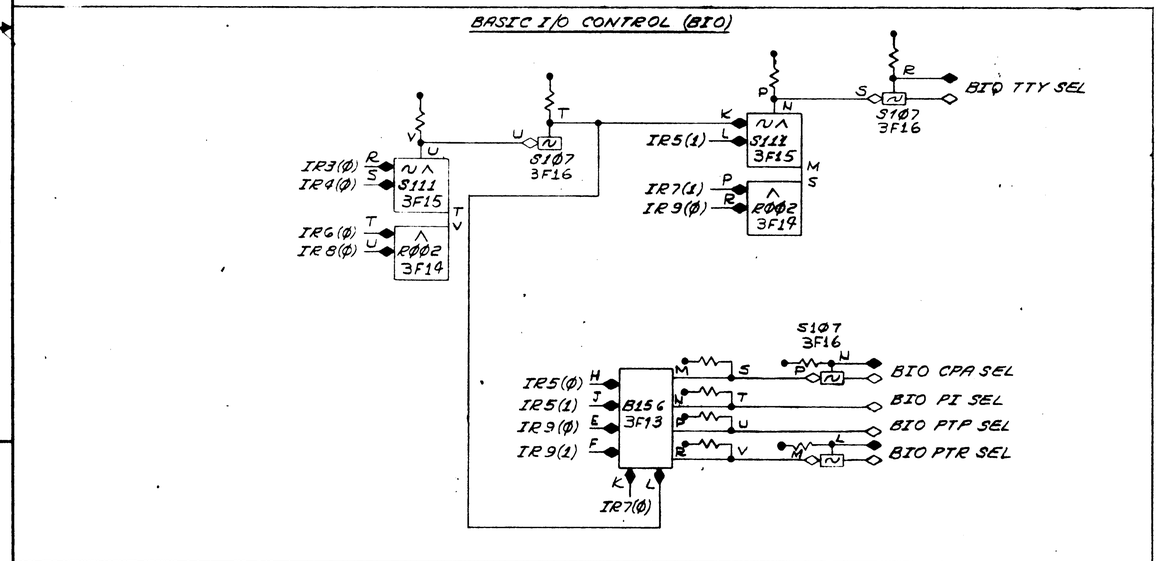

REVISIONS		
CHK	CHANGE NO.	REV.
	WIDE LISTED 2/23	PØ5
	REVISED 3/9/67	PØ6
	REVISED 3/13/67	PØ7

QTY.	DESCRIPTION	PART NO.	ITEM NO.
	PARTS LIST		

UNLESS OTHERWISE SPECIFIED
UNLESS OTHERWISE SPECIFIED
DIMENSION IN INCHES
TOLERANCES
DECIMALS ± .005 FRACTIONS ± 1/64 ANGLES ± 0°30'
FINAL SURFACE QUALITY ✓
REMOVE BURRS AND BREAK SHARP CORNERS

MATERIAL

FINISH

DRN. DATE 11/27/66
CHK'D. DATE
ENG. DATE
PROJ. ENG. DATE
PROD. DATE
FIRST USED ON
SCALE
SHEET OF

digital EQUIPMENT CORPORATION MAYNARD, MASSACHUSETTS

TITLE MASTER CLEAR AND POWER CLEAR

SIZE D CODE BS NUMBER MR REV. PØ7

DIST.

This drawing and specifications, herein, are the property of Digital Equipment Corporation and shall not be reproduced or copied or used in whole or in part as the basis for the manufacture or sale of items without written permission.

ALL MODULES ON THIS SHEET ARE OPTIONAL.

REV.	CHANGE NO.	DATE
PØ6	MADE LISTED	2/23
PØ7	REVISED	9/29/67

QTY.	DESCRIPTION	PART NO.	ITEM NO.

PARTS LIST

UNLESS OTHERWISE SPECIFIED DIMENSION IN INCHES
TOLERANCES: DECIMALS ± .005, FRACTIONS ± 1/64, ANGLES ± 0°30'
FINAL SURFACE QUALITY ✓ REMOVE BURRS AND BREAK SHARP CORNERS
MATERIAL
FINISH

DRN. [signature] DATE 8/12/66
CHK'D. DATE
ENG. DATE
PROJ. ENG. DATE
PROD. DATE
FIRST USED ON
SCALE
SHEET OF

digital EQUIPMENT CORPORATION MAYNARD, MASSACHUSETTS

TITLE: NORMALIZE RETURN AND NR LONG

SIZE D, CODE BS, NUMBER 168-Ø-NRNL, REV. PØ7

DIST.

This drawing and specifications, herein, are the property of Digital Equipment Corporation and shall not be reproduced or copied or used in whole or in part as the basis for the manufacture or sale of items without written permission.

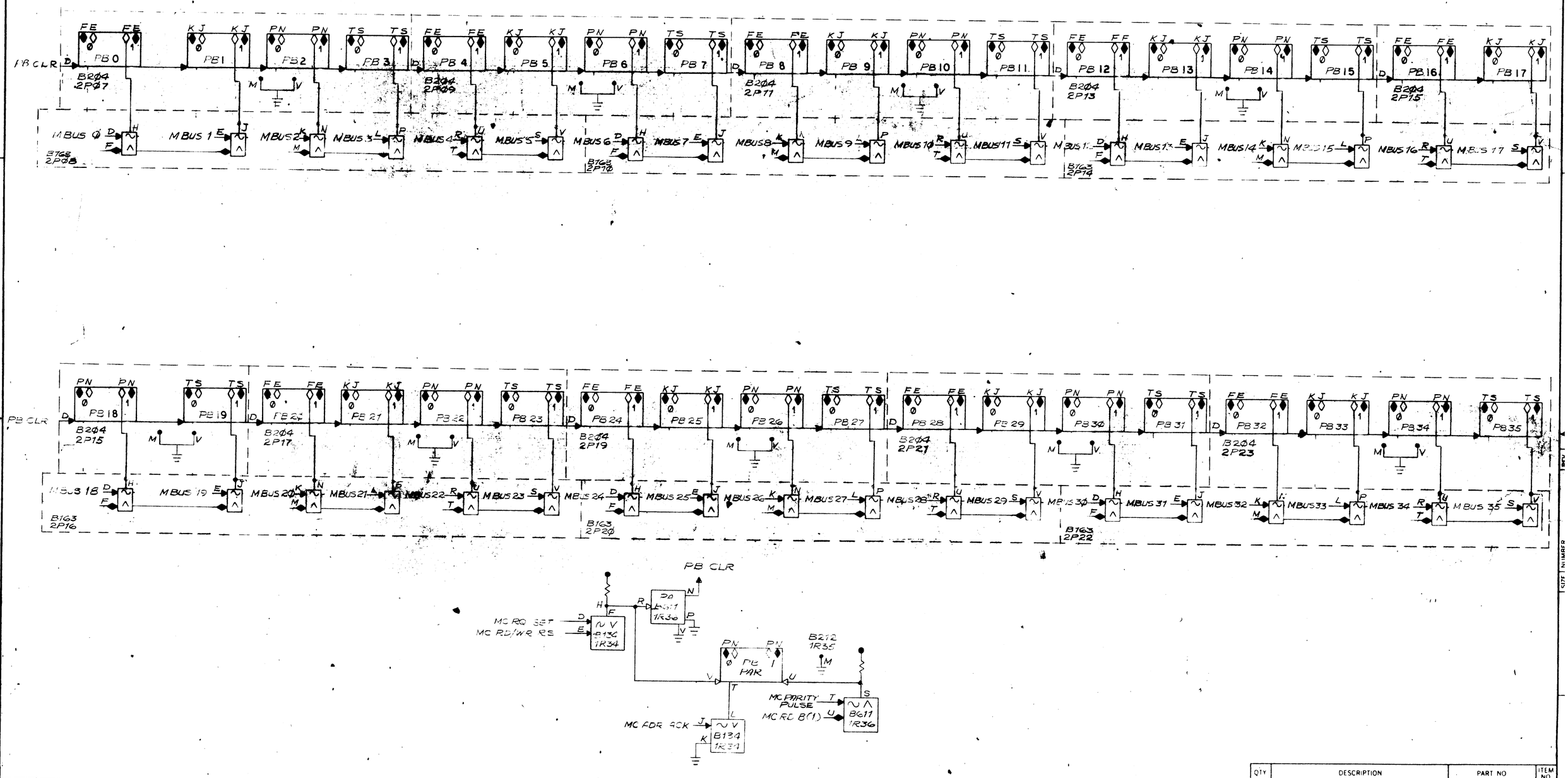

REVISIONS			
CHK	CHANGE NO.		REV.

DEC FORM NO.

QTY	DESCRIPTION	PART NO	ITEM NO
	PARTS LIST		

DO NOT SCALE DRAWING

UNLESS OTHERWISE SPECIFIED
DIMENSION IN INCHES
TOLERANCES
DECIMALS ± .005 FRACTIONS ± 1/64 ANGLES ± 0.30
FINAL SURFACE QUALITY
REMOVE BURRS AND BREAK SHARP CORNERS

MATERIAL

FINISH

DRN	RAY	DATE 12-3-65
CHK D		DATE
ENG		DATE
PROJ ENG		DATE
PROD		DATE
FIRST USED ON		
SCALE		
SHEET	OF	

digital EQUIPMENT CORPORATION
MAYNARD MASSACHUSETTS

TITLE
PARITY BUFFER REGISTER

CODE	SIZE	NUMBER	REV.
B5	D	PB	PØ7

DIST

This drawing and specifications, herein, are the property of Digital Equipment Corporation and shall not be reproduced or copied or used in whole or in part as the basis for the manufacture or sale of items without written permission.

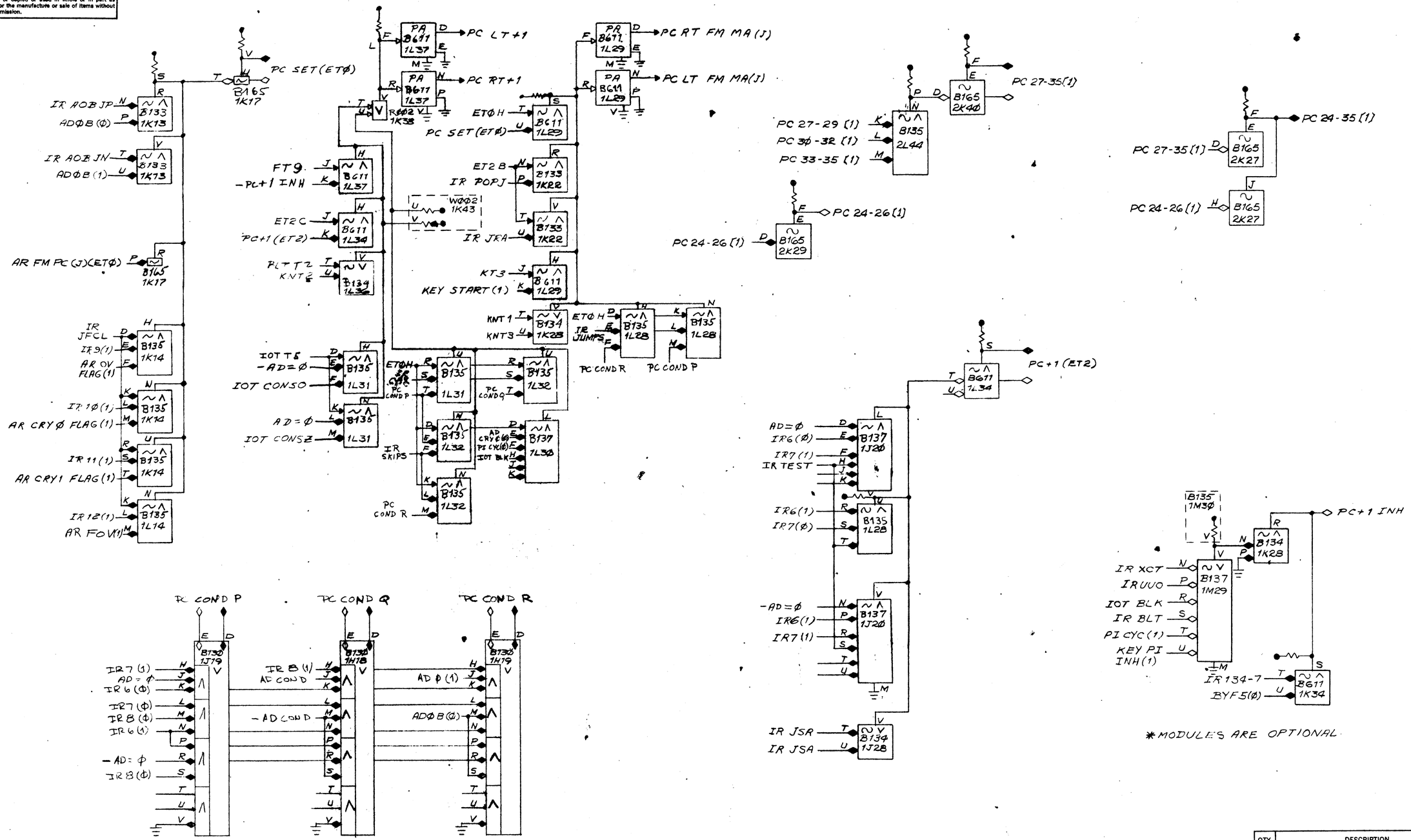

REVISIONS		
CHANGE NO.		REV.
WWE LISTED 2/23		P07
REVISED 3/14/67		P08
REVISED 4/29/67		P09

DEC FORM NO.

QTY.	DESCRIPTION	PART NO.	ITEM NO.
	PARTS LIST		

DO NOT SCALE DRAWING

UNLESS OTHERWISE SPECIFIED
DIMENSION IN INCHES
TOLERANCES
DECIMALS ± .005 FRACTIONS ± 1/64 ANGLES ± 0°30'
FINAL SURFACE QUALITY ✓
REMOVE BURRS AND BREAK SHARP CORNERS

MATERIAL

FINISH

DRN. GB	DATE 11/16/65	digital EQUIPMENT CORPORATION MAYNARD, MASSACHUSETTS
CHK'D.	DATE	
ENG.	DATE	TITLE PROGRAM COUNTER CONTROL
PROJ. ENG.	DATE	
PROD.	DATE	
FIRST USED ON		CODE BS SIZE D NUMBER D-168-0-PC1 REV. P09
SCALE		
SHEET OF		DIST.

SIZE D NUMBER D-168-0-PC1 REV. P09

This drawing and specifications, herein, are the property of Digital Equipment Corporation and shall not be reproduced or copied or used in whole or in part as the basis for the manufacture or sale of items without written permission

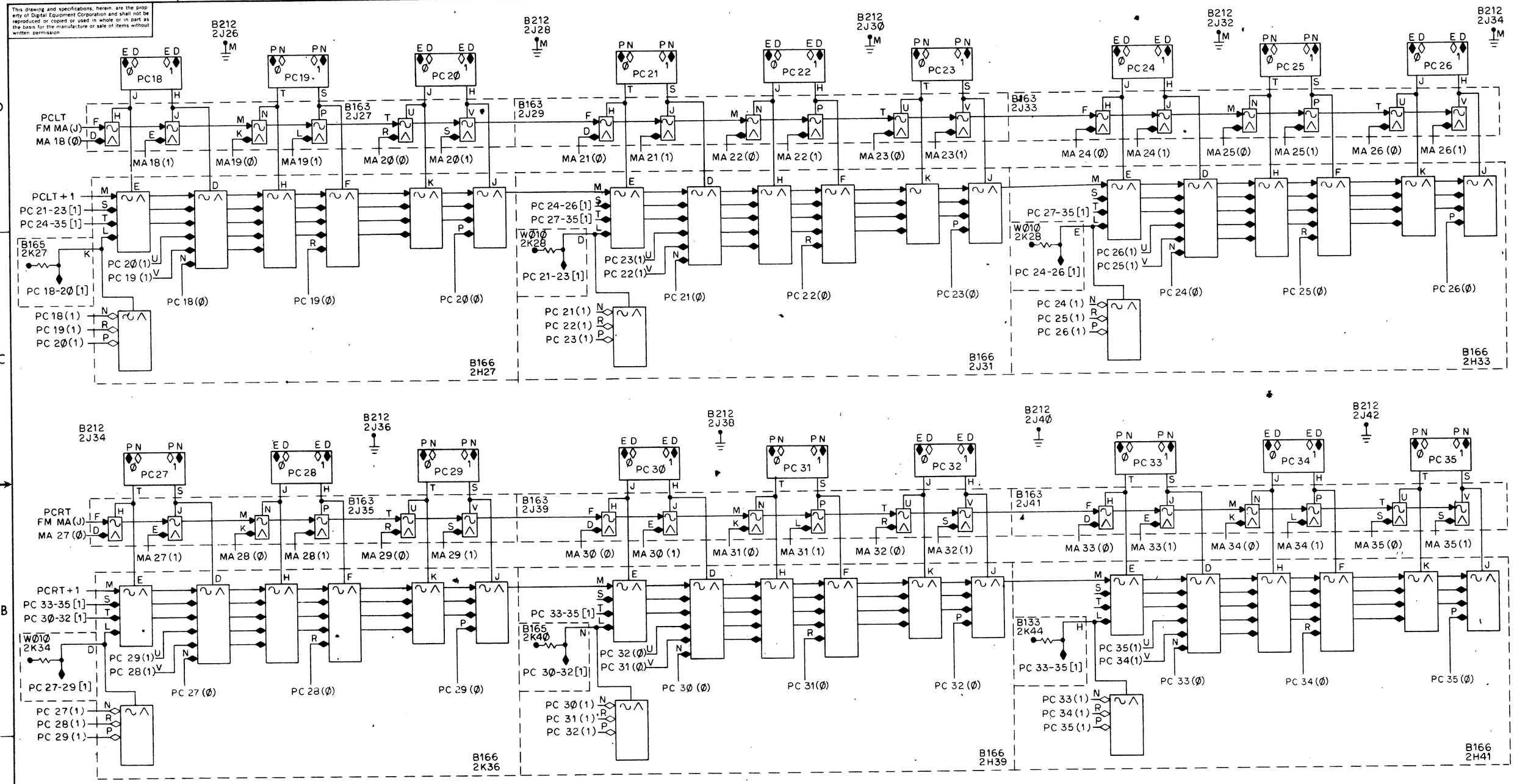

NOTE: ALL FLIP FLOP INPUTS ON THIS DRAWNING ARE WIRE LISTED AS PC N SET OR PC N CLR

QTY.	DESCRIPTION	PART NO.	ITEM NO.
	PARTS LIST		

UNLESS OTHERWISE SPECIFIED
DIMENSION IN INCHES
TOLERANCES
DECIMALS ± .005 FRACTIONS ± 1/64 ANGLES ± 0°30'
FINAL SURFACE QUALITY / REMOVE BURRS AND BREAK SHARP CORNERS

MATERIAL

FINISH

DRN. R. Stephenson DATE 4-12-67
CHK'D. D. F. Adams DATE 4/26/67
ENG. DATE
PROJ. ENG. DATE
PROD. DATE
FIRST USED ON
SCALE
SHEET OF

digital EQUIPMENT CORPORATION
MAYNARD, MASSACHUSETTS

TITLE
PROGRAM COUNTER REGISTER

SIZE D CODE BS NUMBER D-168-0-PC2 REV. PØ1
DIST.

REVISIONS
REV. | CHANGE NO. | CHK

This drawing and specifications, herein, are the property of Digital Equipment Corporation and shall not be reproduced or copied or used in whole or in part as the basis for the manufacture or sale of items without written permission.

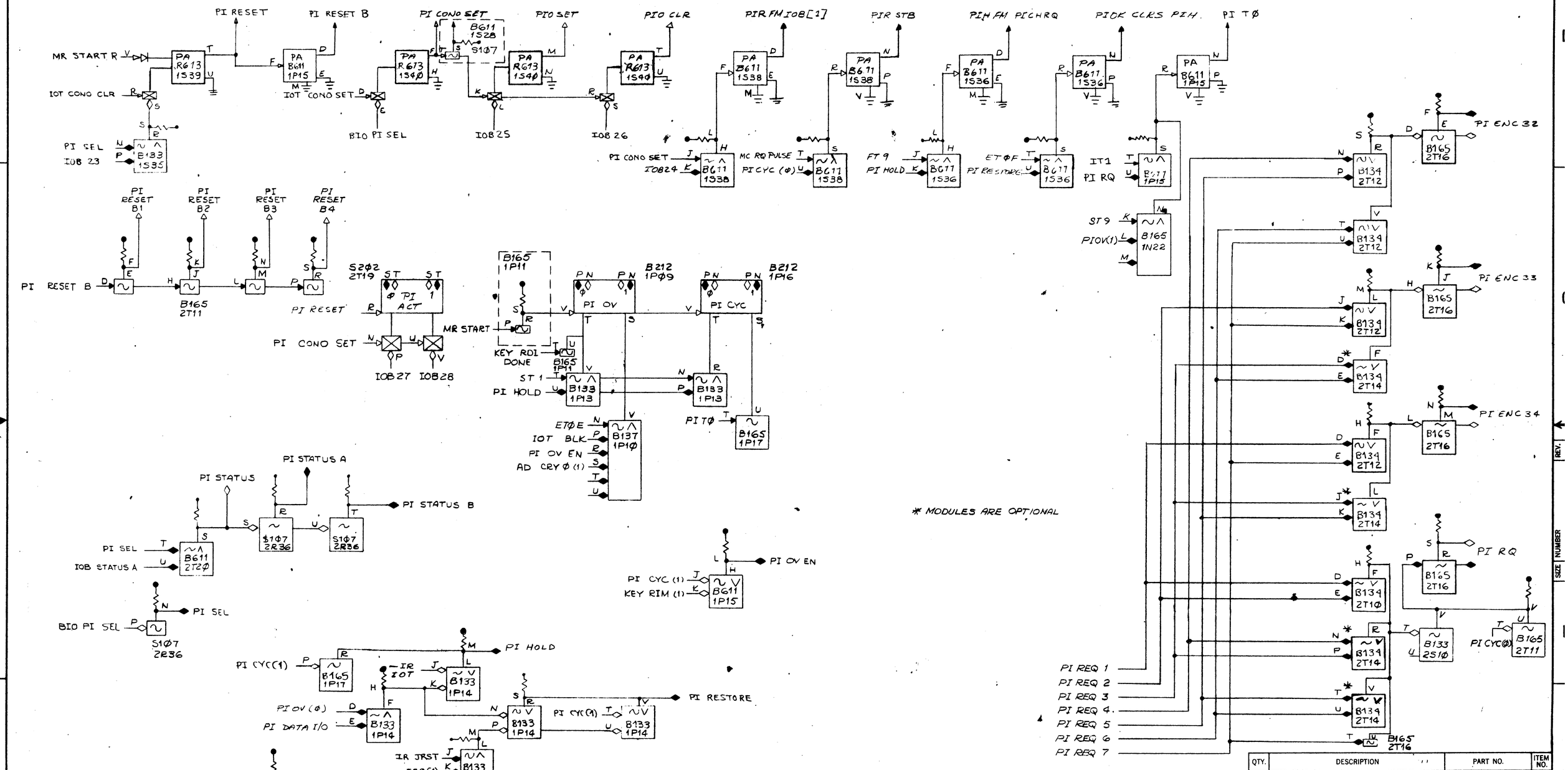

QTY.	DESCRIPTION	PART NO.	ITEM NO.
	PARTS LIST		

DO NOT SCALE DRAWING

UNLESS OTHERWISE SPECIFIED
DIMENSION IN INCHES
TOLERANCES
DECIMALS ± .005 FRACTIONS ± 1/64 ANGLES ± 0°30'
FINAL SURFACE QUALITY ✓
REMOVE BURRS AND BREAK SHARP CORNERS

MATERIAL

FINISH

DRN.		DATE 11-23-65
CHK'D.		DATE
ENG.		DATE
PROJ. ENG.		DATE
PROD.		DATE
FIRST USED ON		
SCALE		
SHEET	OF	

digital EQUIPMENT CORPORATION
MAYNARD, MASSACHUSETTS

TITLE PI CONTROL

CODE	SIZE	NUMBER	REV.
BS	D	PI 1	P09

DIST.

REVISIONS

CHK	CHANGE NO.	REV.
	WIRE LISTED 2/23	P07
	REVISED 3/17/67	P08
	REVISED 4/7/67	P09

This drawing and specifications, herein, are the property of Digital Equipment Corporation and shall not be reproduced or copied or used in whole or in part as the basis for the manufacture or sale of items without written permission.

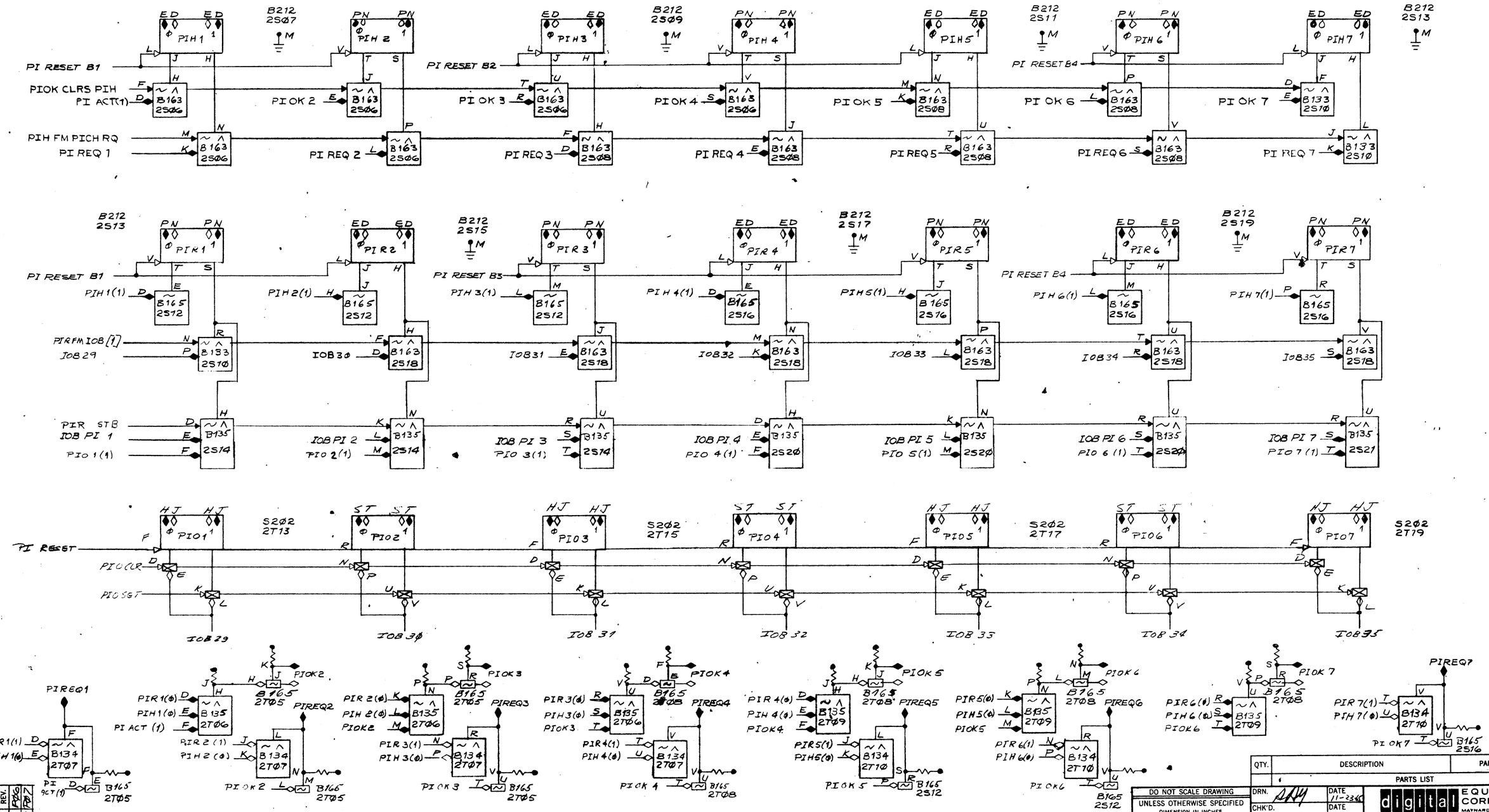

QTY.	DESCRIPTION	PART NO.	ITEM NO.
	PARTS LIST		

DO NOT SCALE DRAWING

UNLESS OTHERWISE SPECIFIED
DIMENSION IN INCHES
TOLERANCES
DECIMALS ± .005 FRACTIONS ± 1/64 ANGLES ± 0°30'
FINAL SURFACE QUALITY ✓
REMOVE BURRS AND BREAK SHARP CORNERS

MATERIAL

FINISH

		DATE
DRN.		11-23-66
CHK'D.		
ENG.		
PROJ. ENG.		
PROD.		

FIRST USED ON

SCALE

SHEET OF

digital EQUIPMENT CORPORATION
MAYNARD, MASSACHUSETTS

TITLE
PRIORITY INTERRUPT
PIH, PIR, PIO

CODE	SIZE	NUMBER	REV.
BS	D	PI2	PØ7

DIST.

REVISIONS

CHK.	CHANGE NO.	REV.
	WIRE LISTED 2/23	PØ6
	REVISED 3/2/67	PØ7

This drawing and specifications, herein, are the property of Digital Equipment Corporation and shall not be reproduced or copied or used in whole or in part as the basis for the manufacture or sale of items without written permission.

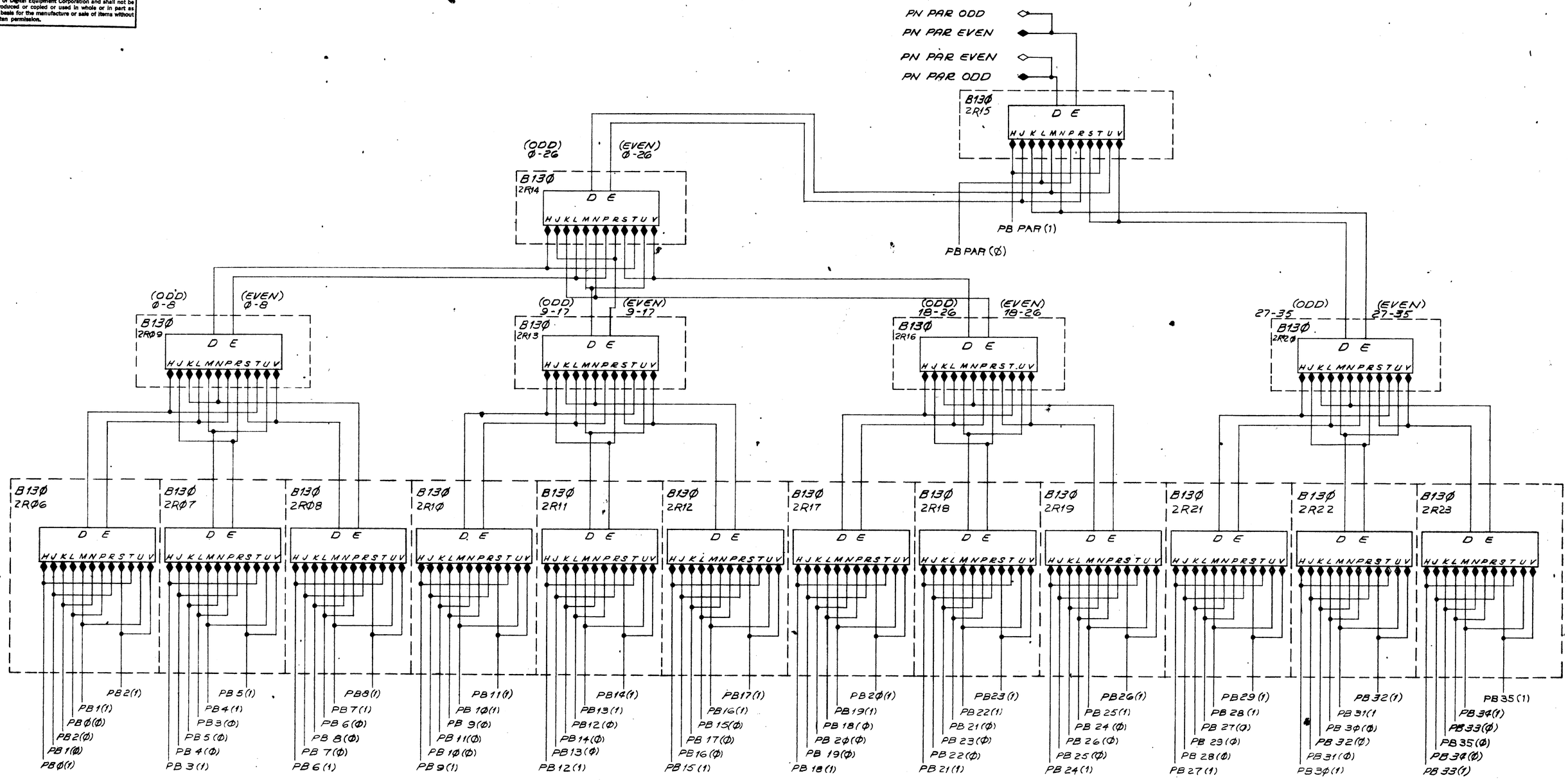

REVISIONS		
CHK.	CHANGE NO.	REV.
	WIRE LISTED 2/23	PØ3

QTY.	DESCRIPTION	PART NO.	ITEM NO.
	PARTS LIST		

UNLESS OTHERWISE SPECIFIED

UNLESS OTHERWISE SPECIFIED
DIMENSION IN INCHES
TOLERANCES
DECIMALS ± .005 FRACTIONS ± 1/64 ANGLES ± 0°30'
FINAL SURFACE QUALITY ✓
REMOVE BURRS AND BREAK SHARP CORNERS

MATERIAL

FINISH

DRN. See Agreement	DATE 8-24-4	digital EQUIPMENT CORPORATION MAYNARD, MASSACHUSETTS
CHK'D.	DATE	
ENG.	DATE	TITLE PARITY NETWORK
PROJ. ENG.	DATE	
PROD.	DATE	
FIRST USED ON		
SCALE		SIZE D CODE BS NUMBER PN REV. PØ3
SHEET OF		DIST.

This drawing and specifications, herein, are the property of Digital Equipment Corporation and shall not be reproduced or copied or used in whole or in part as the basis for the manufacture or sale of items without written permission.

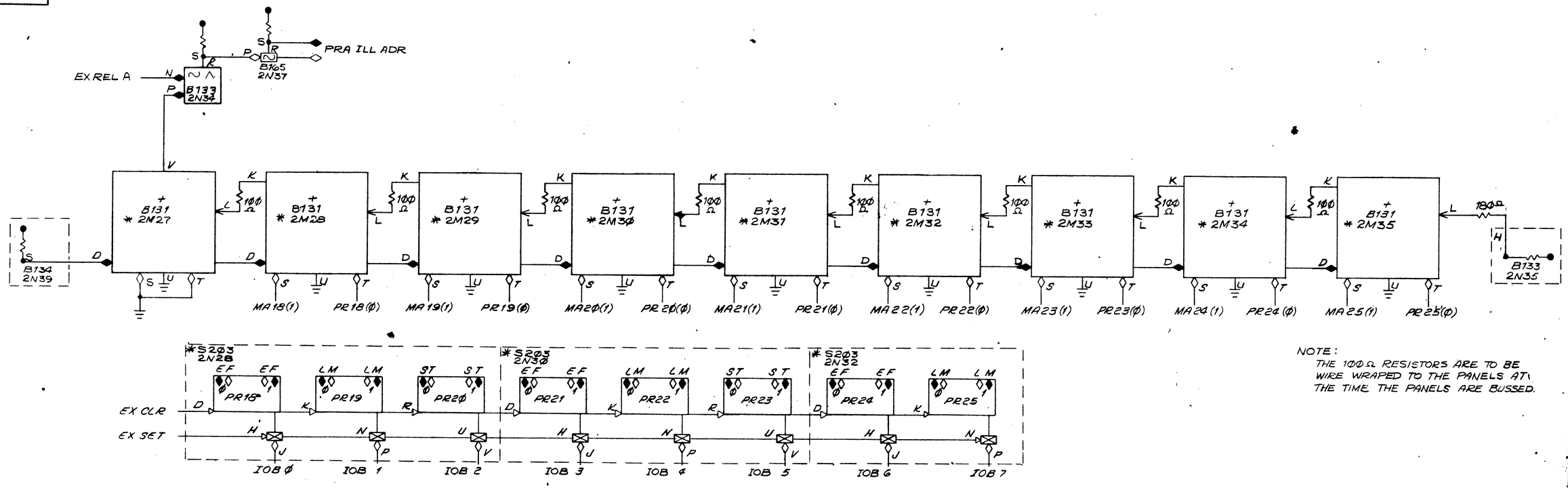

NOTE:
THE 100 Ω RESISTORS ARE TO BE WIRE WRAPED TO THE PANELS AT THE TIME THE PANELS ARE BUSSED.

* MODULES ARE OPTIONAL

QTY.	DESCRIPTION	PART NO.	ITEM NO.

PARTS LIST

UNLESS OTHERWISE SPECIFIED
UNLESS OTHERWISE SPECIFIED
DIMENSION IN INCHES
TOLERANCES
DECIMALS ± .005 FRACTIONS ± 1/64 ANGLES ± 0°30'
FINAL SURFACE QUALITY √
REMOVE BURRS AND BREAK SHARP CORNERS

MATERIAL

FINISH

DRN. Sylvia DATE 3/14/66
CHKD. DATE
ENG. DATE
PROJ. ENG. DATE
PROD. DATE
FIRST USED ON
SCALE
SHEET OF

digital EQUIPMENT CORPORATION
MAYNARD, MASSACHUSETTS

TITLE
PROTECT REGISTER

SIZE D CODE BS NUMBER PR REV. P006
DIST.

REVISIONS

CHK.	CHANGE NO.	REV.
	WIRE LISTED 2/23	P006

This drawing and specifications, herein, are the property of Digital Equipment Corporation and shall not be reproduced or copied or used in whole or in part as the basis for the manufacture or sale of items without written permission.

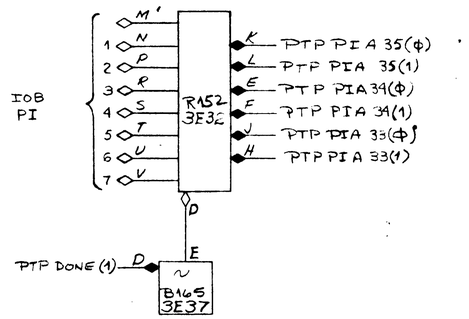

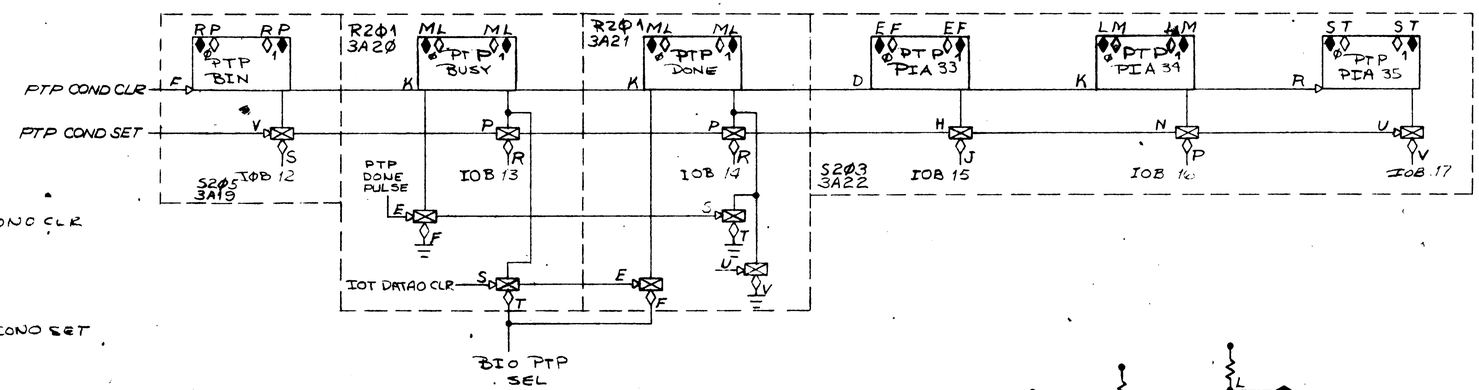

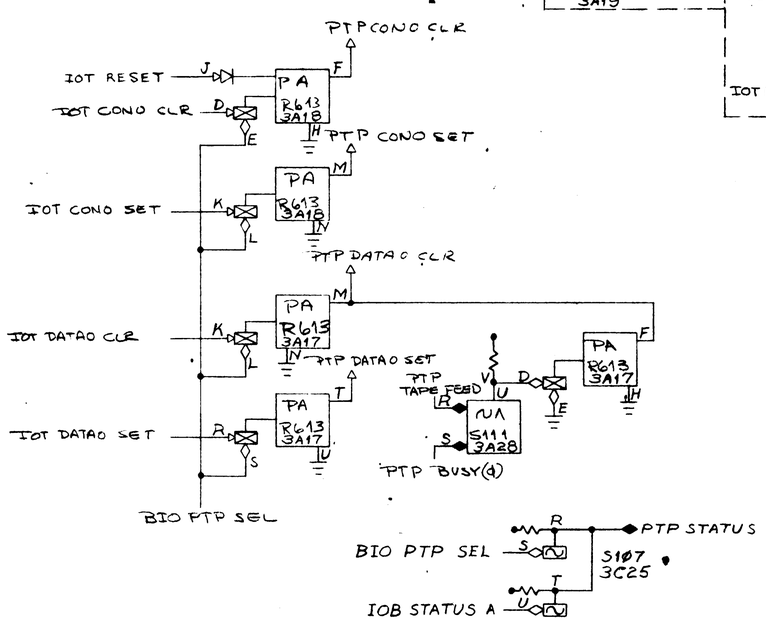

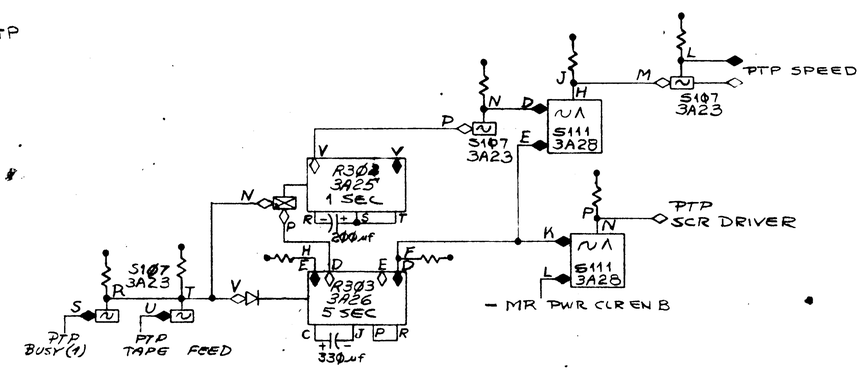

QTY.	DESCRIPTION	PART NO.	ITEM NO.
	PARTS LIST		

UNLESS OTHERWISE SPECIFIED
UNLESS OTHERWISE SPECIFIED
DIMENSION IN INCHES
TOLERANCES
DECIMALS ± .005 FRACTIONS ± 1/64 ANGLES ± 0°30'
FINAL SURFACE QUALITY ✓
REMOVE BURRS AND BREAK SHARP CORNERS

MATERIAL

FINISH

DRN. DATE 8/24/66
CHK'D. DATE
ENG. DATE
PROJ. ENG. DATE
PROD. DATE
FIRST USED ON
SCALE
SHEET OF

digital EQUIPMENT CORPORATION
MAYNARD, MASSACHUSETTS

TITLE
PAPER TAPE PUNCH CONTROL 1

SIZE D CODE BS NUMBER KA10-Φ-PTP1 REV. PØ8
DIST.

REV.	CHANGE NO.	CHK
PØ5	MADE LISTED 2/23/67	
PØ6	REVISED 3/9/67	
PØ7	REVISED 4/3/67	
PØ8	REVISED 4/11/67	

This drawing and specifications, herein, are the property of Digital Equipment Corporation and shall not be reproduced or copied or used in whole or in part as the basis for the manufacture or sale of items without written permission.

QTY.	DESCRIPTION	PART NO.	ITEM NO.

PARTS LIST

UNLESS OTHERWISE SPECIFIED
DIMENSION IN INCHES
TOLERANCES
DECIMALS ± .005 FRACTIONS ± 1/64 ANGLES ± 0°30'
FINAL SURFACE QUALITY ✓
REMOVE BURRS AND BREAK SHARP CORNERS

MATERIAL

FINISH

DRN. | DATE
CHK'D. | DATE
ENG. | DATE
PROJ. ENG. | DATE
PROD. | DATE
FIRST USED ON
SCALE
SHEET OF

digital EQUIPMENT CORPORATION MAYNARD, MASSACHUSETTS

TITLE
PAPER TAPE PUNCH CONTROL 2

SIZE	CODE	NUMBER	REV.
D	BS	KA10-0-PTP2	P10

DIST.

REVISIONS

REV.	CHANGE NO.	CHK
P03	WIRE LISTED 2/23	
P04	REVISED 3/3/67	
P05	REVISED 3/14/67	
P06	REVISED 3/15/67	
P07	REVISED 4/3/67	
P08	REVISED 4/6/67	
P09	REVISED 4/11/67	
P10	REVISED 4/14/67	

This drawing and specifications, herein, are the property of Digital Equipment Corporation and shall not be reproduced or copied or used in whole or in part as the basis for the manufacture or sale of items without written permission.

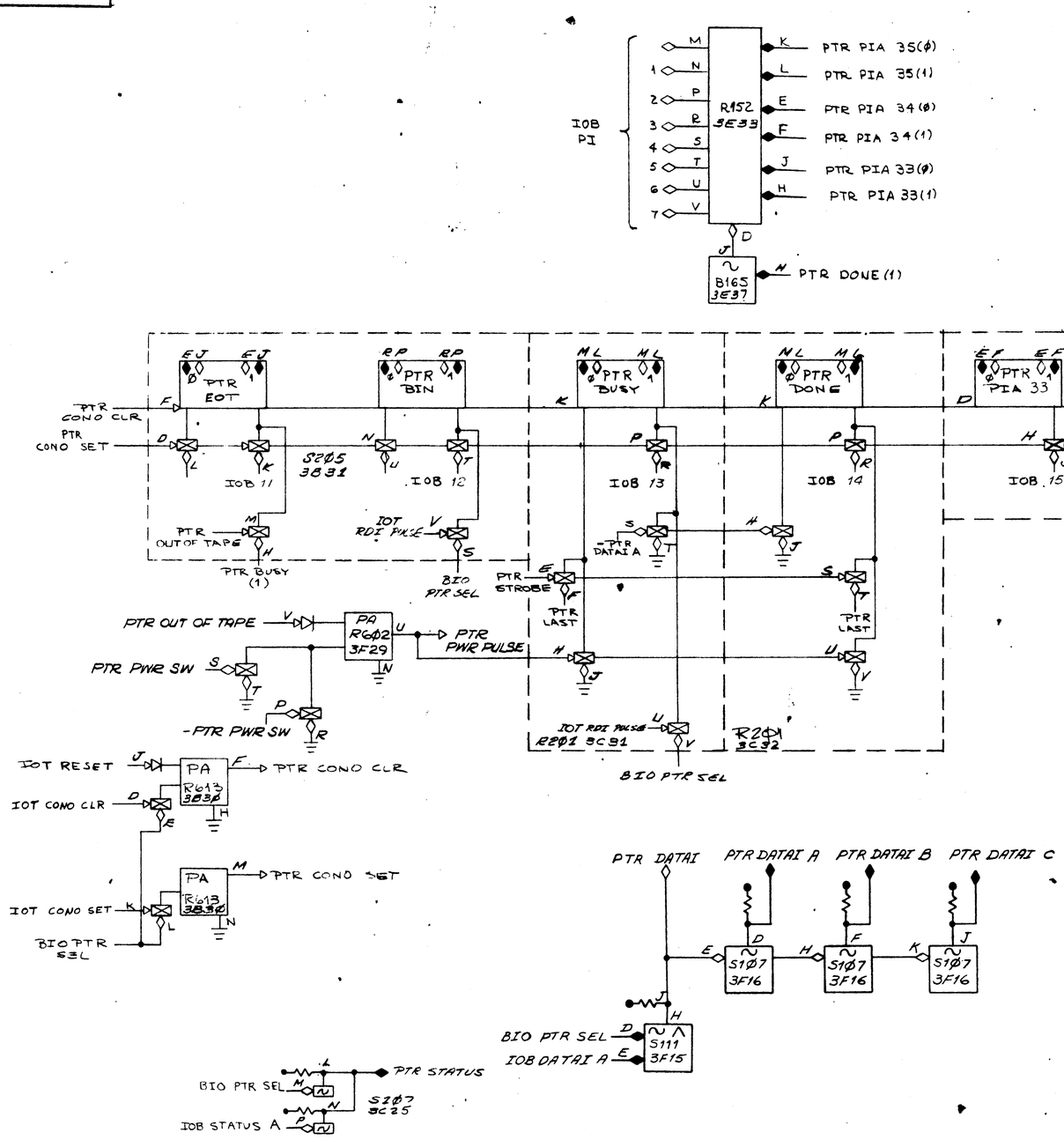

REVISIONS			
CHK	CHANGE NO.		REV.
	WIDE LISTED	2/63	PØ5
	REVISED	3/1967	PØ6
	REVISED	4/3/67	PØ7

QTY.	DESCRIPTION	PART NO.	ITEM NO.
	PARTS LIST		

UNLESS OTHERWISE SPECIFIED

UNLESS OTHERWISE SPECIFIED
DIMENSION IN INCHES
TOLERANCES
DECIMALS ± .005 FRACTIONS ± 1/64 ANGLES ± 0°30'
FINAL SURFACE QUALITY ✓
REMOVE BURRS AND BREAK SHARP CORNERS

MATERIAL

FINISH

DRN.		DATE 6/24/66
CHKD.		DATE
ENG.		DATE
PROJ. ENG.		DATE
PROD.		DATE
FIRST USED ON		
SCALE		
SHEET	OF	

digital EQUIPMENT CORPORATION
MAYNARD, MASSACHUSETTS

TITLE
PAPER TAPE READER CONTROL

SIZE	CODE	NUMBER	REV.
D	BS	KA-1Ø-Ø-PTR1	PØ7

DIST.

This drawing and specifications, herein, are the property of Digital Equipment Corporation and shall not be reproduced or copied or used in whole or in part as the basis for the manufacture or sale of items without written permission.

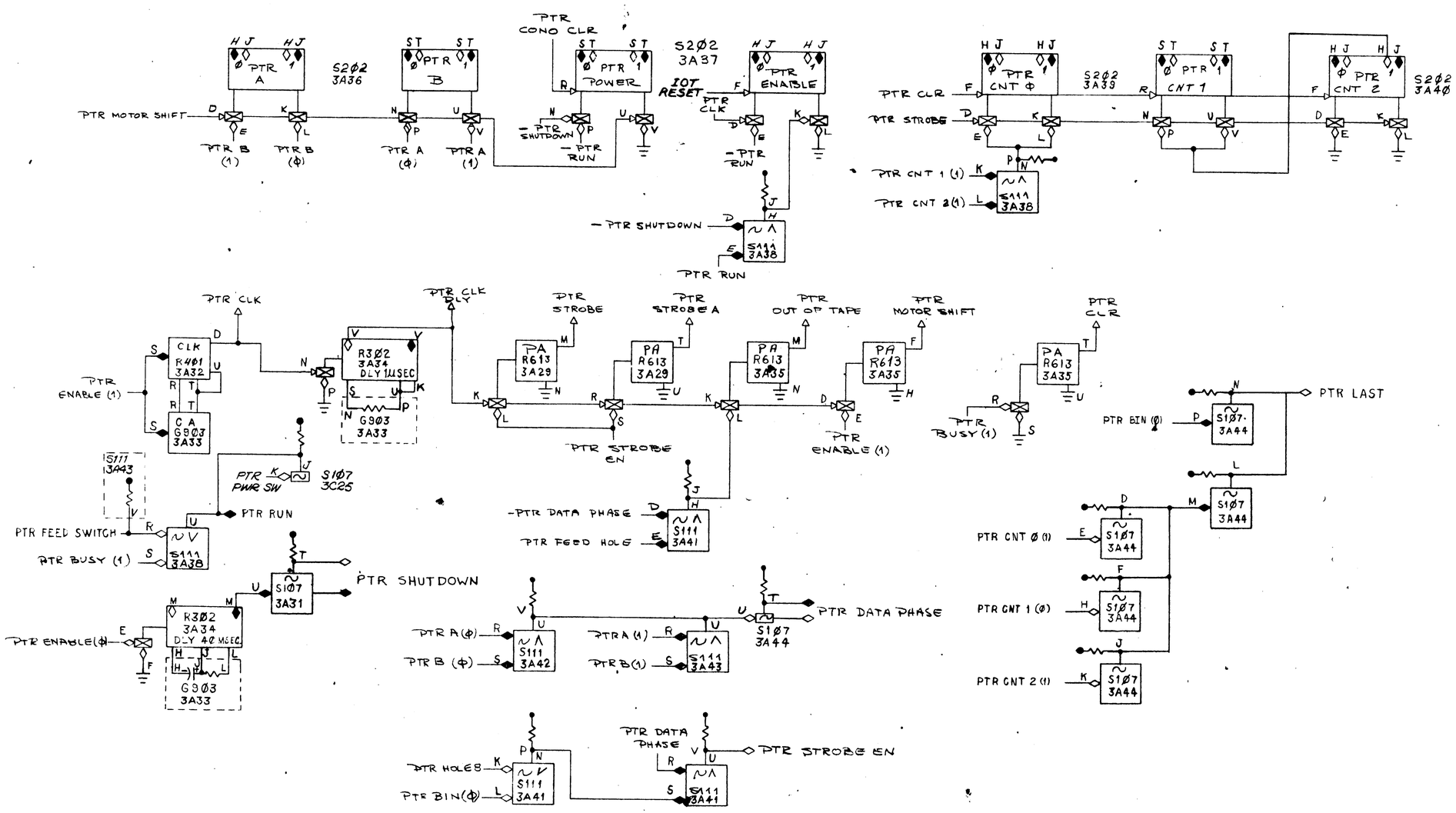

QTY.	DESCRIPTION	PART NO.	ITEM NO.

PARTS LIST

UNLESS OTHERWISE SPECIFIED
UNLESS OTHERWISE SPECIFIED
DIMENSION IN INCHES
TOLERANCES
DECIMALS ± .005 FRACTIONS ± 1/64 ANGLES ± 0°30'
FINAL SURFACE QUALITY ✓
REMOVE BURRS AND BREAK SHARP CORNERS

MATERIAL

FINISH

		DATE
DRN.		8/24/66
CHK'D.		DATE
ENG.		DATE
PROJ. ENG.		DATE
PROD.		DATE
FIRST USED ON		
SCALE		
SHEET	OF	

digital EQUIPMENT CORPORATION
MAYNARD, MASSACHUSETTS

TITLE
PAPER TAPE READER CONTROL

SIZE	CODE	NUMBER	REV.
D	BS	KA-1Ø-Ø-PTR2	PØ6

DIST.

REVISIONS

CH.	CHANGE NO.	REV.
	MADE LISTED 2/23	PØ4
	REVISED 3/14/67	PØ5
	REVISED 9/14/67	PØ6

DEC FORM NO.

This drawing and specifications, herein, are the property of Digital Equipment Corporation and shall not be reproduced or copied or used in whole or in part as the basis for the manufacture or sale of items without written permission.

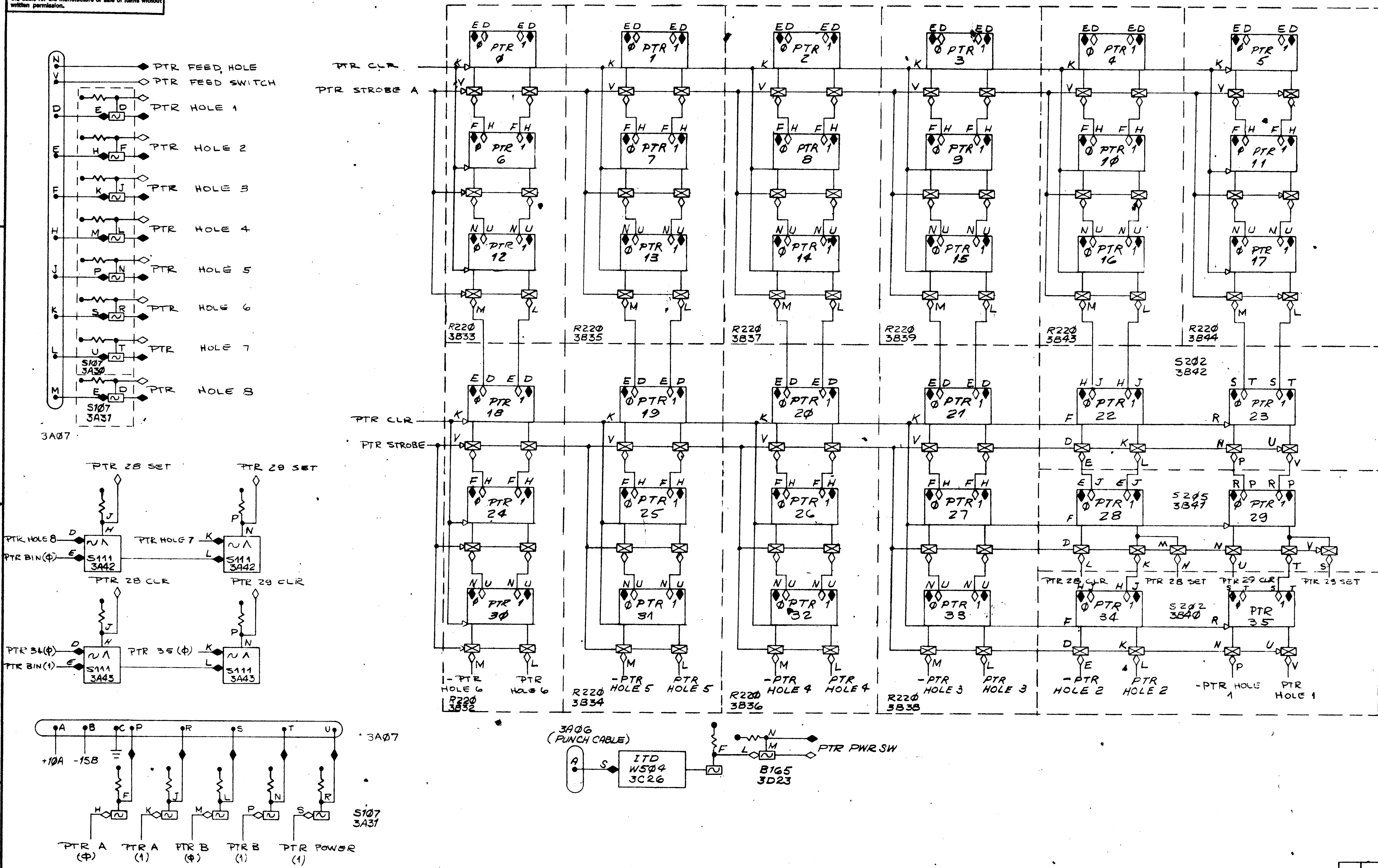

REVISIONS			
CHK	CHANGE NO.		REV.
	WIRE LISTED 2/23		P03
	REVISED 4/4/67		P04

QTY.	DESCRIPTION	PART NO.	ITEM NO.

PARTS LIST

UNLESS OTHERWISE SPECIFIED
DIMENSION IN INCHES
TOLERANCES
DECIMALS ± .005 FRACTIONS ± 1/64 ANGLES ± 0°30'
FINAL SURFACE QUALITY ✓
REMOVE BURRS AND BREAK SHARP CORNERS

MATERIAL

FINISH

DRN. DATE 2/24/67
CHK'D. DATE
ENG. DATE
PROJ. ENG. DATE
PROD. DATE
FIRST USED ON
SCALE
SHEET OF

digital EQUIPMENT CORPORATION MAYNARD, MASSACHUSETTS

TITLE
PAPER TAPE READER CONTROL

SIZE D CODE BS NUMBER KA10-Φ-PTR3 REV. PΦ4

DIST.

This drawing and specifications, herein, are the property of Digital Equipment Corporation and shall not be reproduced or copied or used in whole or in part as the basis for the manufacture or sale of items without written permission.

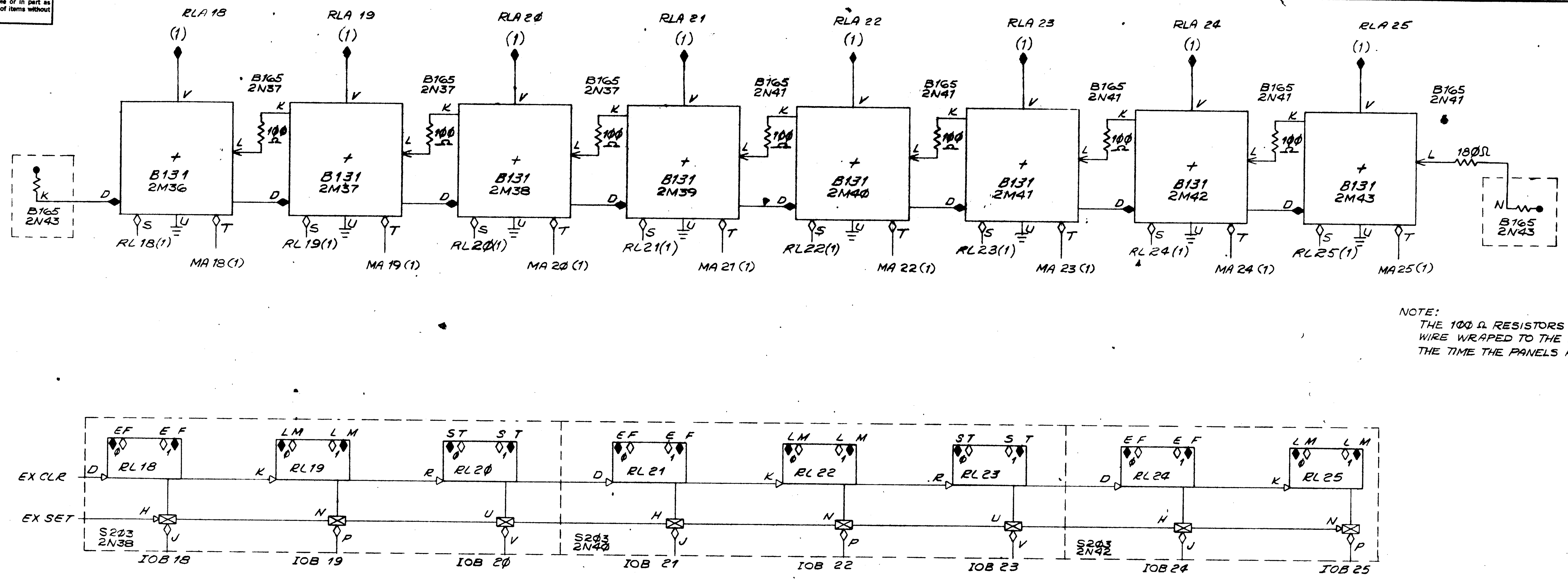

NOTE:
THE 1ØØ Ω RESISTORS ARE TO BE WIRE WRAPED TO THE PANELS AT THE TIME THE PANELS ARE BUSSED.

ALL MODULES ON THIS SHEET ARE OPTIONAL

REV.	CHANGE NO.	CHK
PØ6	WIRE LISTED 2/23	
PØ7	REVISED 3/23/67	

UNLESS OTHERWISE SPECIFIED
DIMENSION IN INCHES
TOLERANCES
DECIMALS ± .005 FRACTIONS ± 1/64 ANGLES ± 0°30'
FINAL SURFACE QUALITY ✓
REMOVE BURRS AND BREAK SHARP CORNERS
MATERIAL
FINISH

QTY.	DESCRIPTION	PART NO.	ITEM NO.

PARTS LIST

DRN. Gajona DATE 9/8/66
CHK'D. DATE
ENG. DATE
PROJ. ENG. DATE
PROD. DATE
FIRST USED ON
SCALE

digital EQUIPMENT CORPORATION MAYNARD, MASSACHUSETTS

TITLE RELOCATE REGISTER

SIZE D CODE BS NUMBER RL REV. PØ7

This drawing and specifications, herein, are the property of Digital Equipment Corporation and shall not be reproduced or copied or used in whole or in part as the basis for the manufacture or sale of items without written permission.

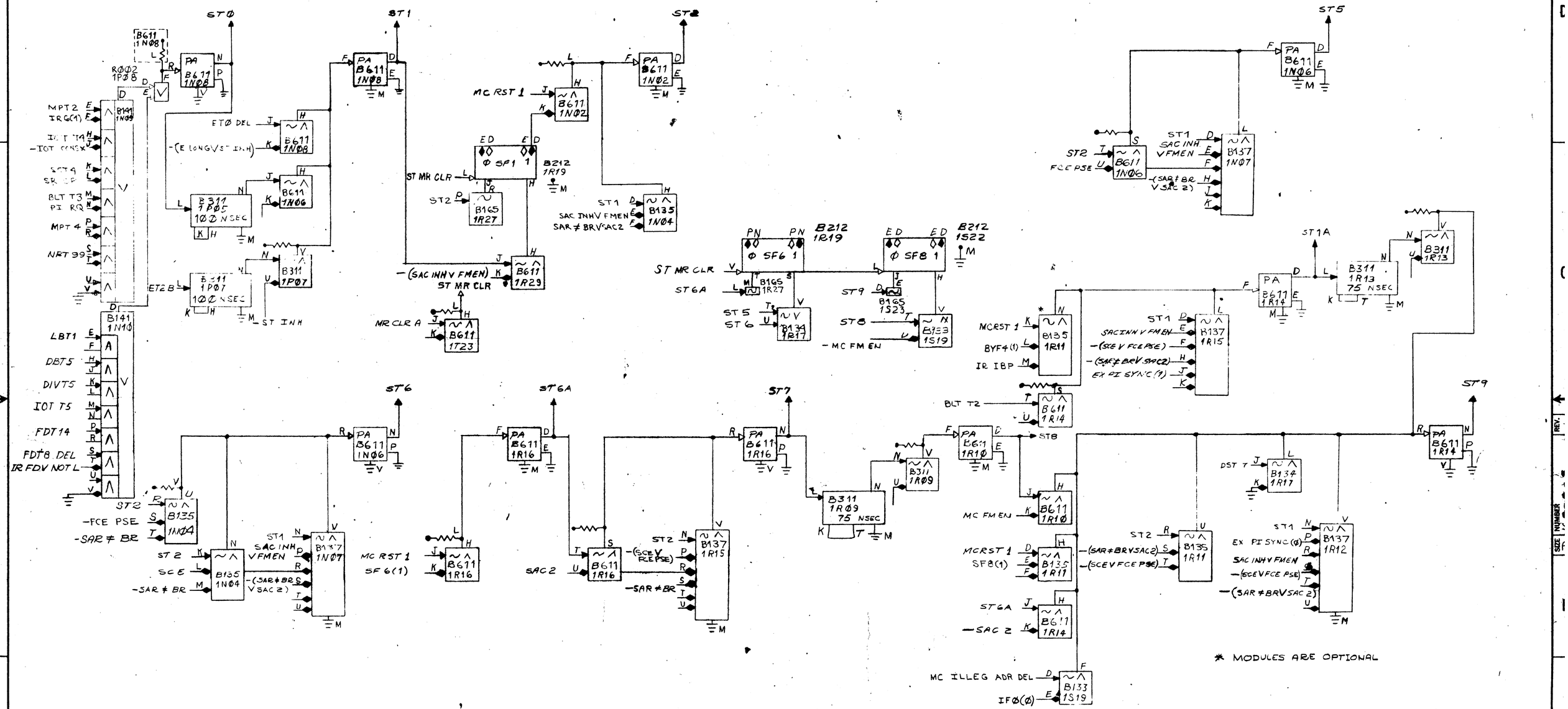

QTY.	DESCRIPTION	PART NO.	ITEM NO.
	PARTS LIST		

DO NOT SCALE DRAWING

UNLESS OTHERWISE SPECIFIED
DIMENSION IN INCHES
TOLERANCES
DECIMALS ± .005 FRACTIONS ± 1/64 ANGLES ± 0°30'
FINAL SURFACE QUALITY ✓
REMOVE BURRS AND BREAK SHARP CORNERS

MATERIAL

FINISH

		DATE
DRN.		11-11-65
CHK'D.		DATE
ENG.		DATE
PROJ. ENG.		DATE
PROD.		DATE

FIRST USED ON

SCALE

SHEET 1 OF 1

digital EQUIPMENT CORPORATION
MAYNARD, MASSACHUSETTS

TITLE
STORE CYCLE
TIME PULSES

CODE	SIZE	NUMBER	REV.
BS	D	168-0-51	P10

DIST.

REVISIONS			
CHK	CHANGE NO.		REV.
	WIRE LISTED 2/23		P07
	REVISED 3/18/67		P08
	REVISED 4/5/67		P09
	REVISED 6/4/67		P10

DEC FORM NO.

This drawing and specifications, herein, are the property of Digital Equipment Corporation and shall not be reproduced or copied or used in whole or in part as the basis for the manufacture or sale of items without written permission.

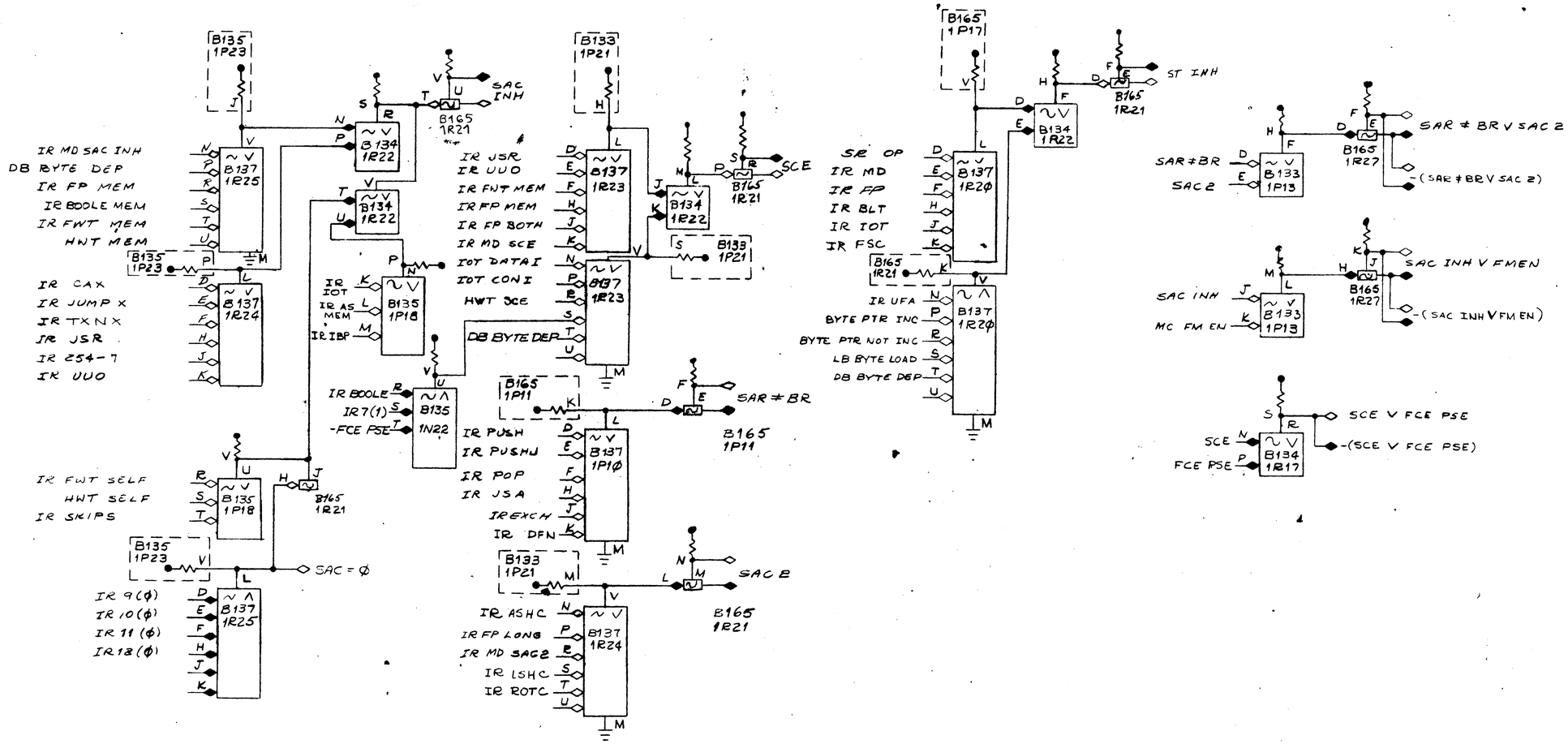

REVISIONS			
CHK.	CHANGE NO.		REV.
	WIRE LISTED 2/23		P06
	REVISED 3/29/67		P07
	REVISED 6/5/67		P08

DEC FORM NO.

QTY.	DESCRIPTION	PART NO.	ITEM NO.
	PARTS LIST		

DO NOT SCALE DRAWING

UNLESS OTHERWISE SPECIFIED
DIMENSION IN INCHES
TOLERANCES
DECIMALS ± .005 FRACTIONS ± 1/64 ANGLES ± 0°30'
FINAL SURFACE QUALITY
REMOVE BURRS AND BREAK SHARP CORNERS

MATERIAL

FINISH

DRN.		DATE 12-11-65
CHK'D		DATE
ENG.		DATE
PROJ. ENG.		DATE
PROD.		DATE
FIRST USED ON		
SCALE		
SHEET 1 OF 1		

digital EQUIPMENT CORPORATION
MAYNARD, MASSACHUSETTS

TITLE
STORE CYCLE LEVELS

CODE	SIZE	NUMBER	REV.
BS	D	168-0-S2	P08

DIST.

SIZE D NUMBER 168-0-S2 REV.

This drawing and specifications, herein, are the property of Digital Equipment Corporation and shall not be reproduced or copied or used in whole or in part as the basis for the manufacture or sale of items without written permission.

UNLESS OTHERWISE SPECIFIED DIMENSION IN INCHES TOLERANCES DECIMALS ± .005 FRACTIONS ± 1/64 ANGLES ± 0°30' FINAL SURFACE QUALITY √ REMOVE BURRS AND BREAK SHARP CORNERS	DRN. W. Stephenson	DATE 4/29/67
	CHK'D. F. Adams	DATE 5/15/67
MATERIAL	ENG.	DATE
FINISH	PROJ. ENG.	DATE
	PROD.	DATE

digital EQUIPMENT CORPORATION MAYNARD, MASSACHUSETTS

TITLE SHIFT COUNT REGISTER

SIZE D CODE BS NUMBER SC REV. PØ1

This drawing and specifications, herein, are the property of Digital Equipment Corporation and shall not be reproduced or copied or used in whole or in part as the basis for the manufacture or sale of items without written permission.

NOTE:
THE 100Ω RESISTORS ARE TO BE WIRE WRAPED TO THE PANELS AT THE TIME THE PANELS ARE BUSSED.

* MODULES ARE OPTIONAL

QTY.	DESCRIPTION	PART NO.	ITEM NO.

PARTS LIST

UNLESS OTHERWISE SPECIFIED
DIMENSION IN INCHES
TOLERANCES
DECIMALS ± .005 FRACTIONS ± 1/64 ANGLES ± 0°30'
FINAL SURFACE QUALITY √
REMOVE BURRS AND BREAK SHARP CORNERS

MATERIAL

FINISH

DRN. [signature] DATE 9/15/66
CHK'D. DATE
ENG. DATE
PROJ. ENG. DATE
PROD. DATE
FIRST USED ON
SCALE

digital EQUIPMENT CORPORATION MAYNARD, MASSACHUSETTS

TITLE
SHIFT COUNT ADDER

SIZE D CODE BS NUMBER SCAD REV. Pϕ6

REVISIONS		
CHANGE NO.	REV.	
WIRE LISTED 2/23	Pϕ6	

This drawing and specifications, herein, are the property of Digital Equipment Corporation and shall not be reproduced or copied or used in whole or in part as the basis for the manufacture or sale of items without written permission.

REV.	CHANGE NO.	CHK
PØ6	WIRE LISTED 2/23	
PØ7	REVISED 3/16/67	
PØ8	REVISED 3/23/67	
PØ9	REVISED 3/31/67	

REVISIONS

QTY.	DESCRIPTION	PART NO.	ITEM NO.

PARTS LIST

UNLESS OTHERWISE SPECIFIED
DIMENSION IN INCHES
TOLERANCES
DECIMALS ± .005 FRACTIONS ± 1/64 ANGLES ± 0°30'
FINAL SURFACE QUALITY √
REMOVE BURRS AND BREAK SHARP CORNERS

MATERIAL

FINISH

DRN. DATE 9/21/66
CHKD. DATE
ENG. DATE
PROJ. ENG. DATE
PROD. DATE
FIRST USED ON

digital EQUIPMENT CORPORATION MAYNARD, MASSACHUSETTS

TITLE
SHIFT COUNTER CONTROL

SIZE D CODE BS NUMBER 168-0-SCC1 REV. PØ9

SCALE
SHEET OF
DIST.

DEC FORM NO.

This drawing and specifications, herein, are the property of Digital Equipment Corporation and shall not be reproduced or copied or used in whole or in part as the basis for the manufacture or sale of items without written permission.

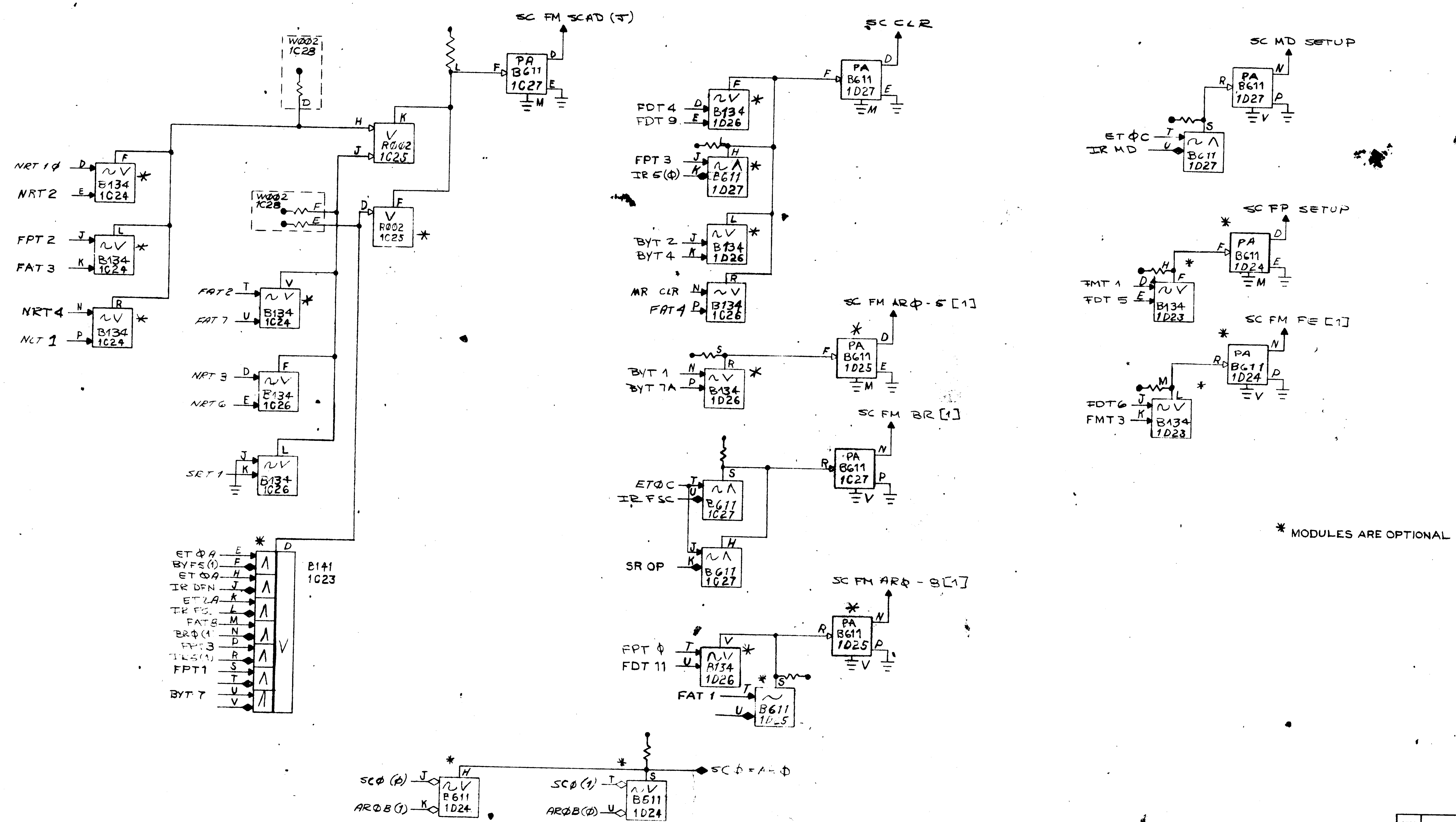

REVISIONS		
REV.	CHANGE NO.	CHK
P07	WIRE LISTED 2/23	
P08	REVISED 4/25/67	

UNLESS OTHERWISE SPECIFIED
DIMENSION IN INCHES
TOLERANCES
DECIMALS ± .005 FRACTIONS ± 1/64 ANGLES ± 0°30'
FINAL SURFACE QUALITY ✓
REMOVE BURRS AND BREAK SHARP CORNERS

MATERIAL

FINISH

QTY.	DESCRIPTION	PART NO.	ITEM NO.

PARTS LIST

DRN. | DATE 7-5-66
CHKD. | DATE
ENG. | DATE
PROJ. ENG. | DATE
PROD. | DATE
FIRST USED ON
SCALE

digital EQUIPMENT CORPORATION MAYNARD, MASSACHUSETTS

TITLE: SHIFT COUNTER CONTROL

SIZE D | CODE BS | NUMBER SCC2 | REV. P08

This drawing and specifications, herein, are the property of Digital Equipment Corporation and shall not be reproduced or copied or used in whole or in part as the basis for the manufacture or sale of items without written permission.

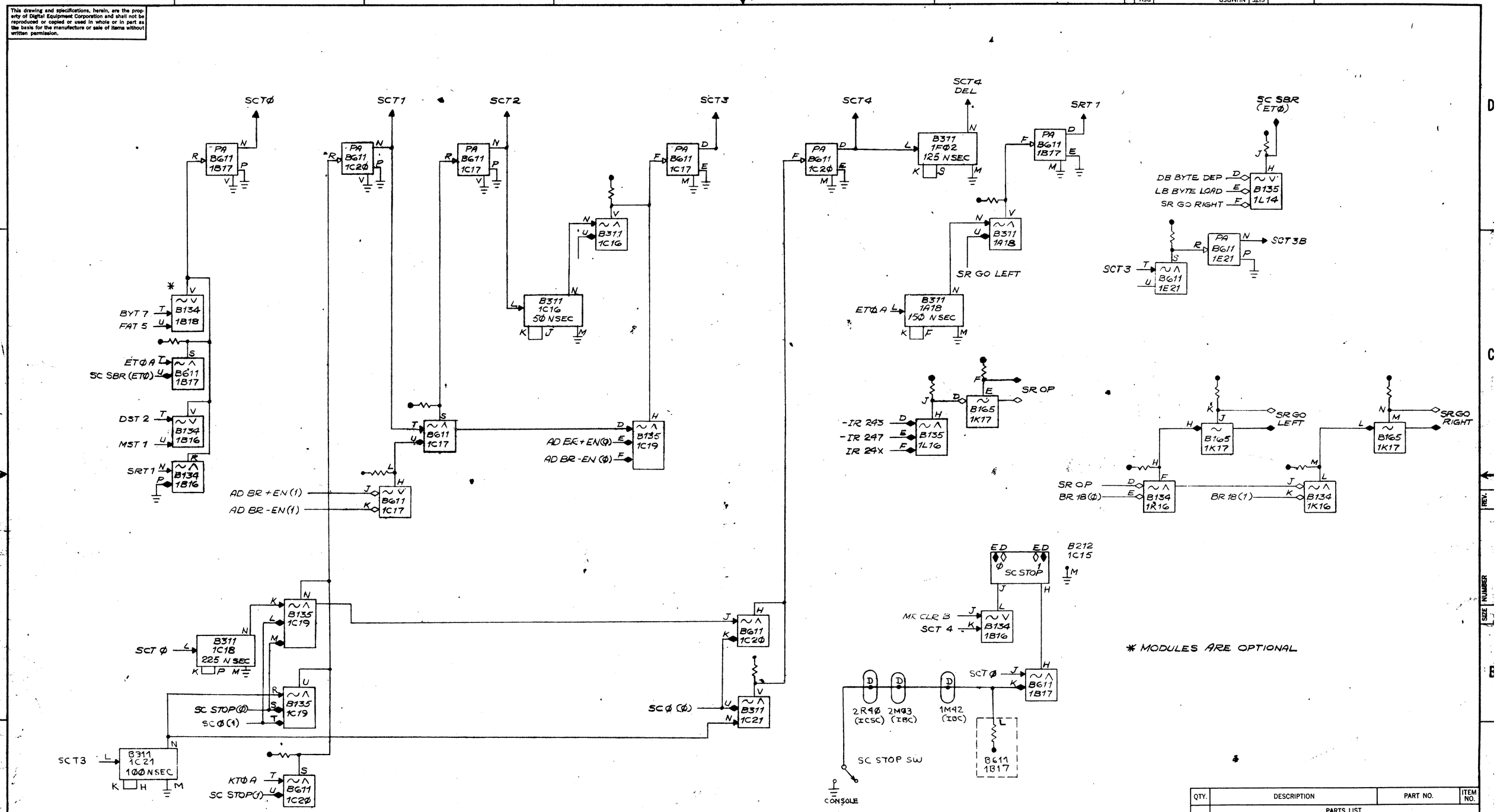

REVISIONS			
CHK	CHANGE NO.		REV.
	WIRE LISTED 2/23		P07
	REVISED 9/4/67		P08
	REVISED 5/25/67		P09

QTY.	DESCRIPTION	PART NO.	ITEM NO.
	PARTS LIST		

DO NOT SCALE DRAWING

UNLESS OTHERWISE SPECIFIED
DIMENSION IN INCHES
TOLERANCES
DECIMALS ± .005 FRACTIONS ± 1/64 ANGLES ± 0°30'
FINAL SURFACE QUALITY ✓
REMOVE BURRS AND BREAK SHARP CORNERS

MATERIAL

FINISH

DRN. NAJ	DATE 11-23-67	digital EQUIPMENT CORPORATION MAYNARD, MASSACHUSETTS
CHK'D.	DATE	
ENG.	DATE	TITLE SHIFT AND COUNT SUBROUTINE AND SHIFT INSTRUCTION
PROJ. ENG.	DATE	
PROD.	DATE	
FIRST USED ON		
SCALE		CODE BS SIZE D NUMBER SCSR REV. P09
SHEET OF		DIST.

This drawing and specifications, herein, are the property of Digital Equipment Corporation and shall not be reproduced or copied or used in whole or in part as the basis for the manufacture or sale of items without written permission.

QTY.	DESCRIPTION	PART NO.	ITEM NO.

PARTS LIST

UNLESS OTHERWISE SPECIFIED
DIMENSION IN INCHES
TOLERANCES
DECIMALS ± .005 FRACTIONS ± 1/64 ANGLES ± 0°30'
FINAL SURFACE QUALITY ✓
REMOVE BURRS AND BREAK SHARP CORNERS
MATERIAL
FINISH

DRN. [signature] DATE 3/17/66
CHKD. DATE
ENG. DATE
PROJ. ENG. DATE
PROD. DATE
FIRST USED ON
SCALE
SHEET OF

digital EQUIPMENT CORPORATION MAYNARD, MASSACHUSETTS

TITLE Teletype Control

SIZE D CODE BS NUMBER TTY1 REV. P04

DIST.

This drawing and specifications, herein, are the property of Digital Equipment Corporation and shall not be reproduced or copied or used in whole or in part as the basis for the manufacture or sale of items without written permission.

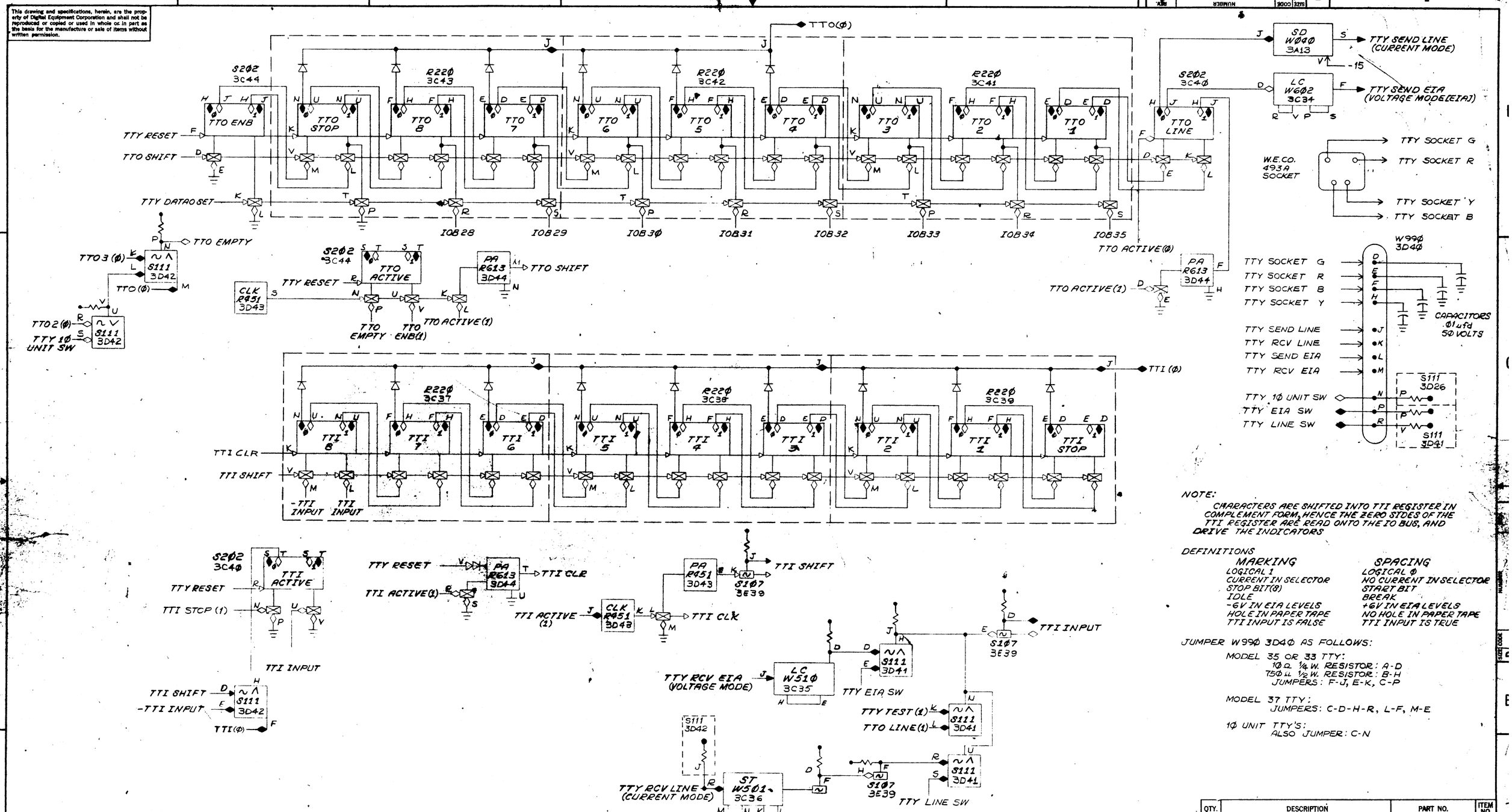

NOTE:

CHARACTERS ARE SHIFTED INTO TTI REGISTER IN COMPLEMENT FORM, HENCE THE ZERO STDES OF THE TTI REGISTER ARE READ ONTO THE IO BUS, AND DRIVE THE INDICATORS

DEFINITIONS

MARKING	SPACING
LOGICAL 1	LOGICAL Ø
CURRENT IN SELECTOR	NO CURRENT IN SELECTOR
STOP BIT(8)	START BIT
IDLE	BREAK
-6V IN EIA LEVELS	+6V IN EIA LEVELS
HOLE IN PAPER TAPE	NO HOLE IN PAPER TAPE
TTI INPUT IS FALSE	TTI INPUT IS TRUE

JUMPER W99Ø 3D4Ø AS FOLLOWS:

MODEL 35 OR 33 TTY:
1Ø Ω ¼ W. RESISTOR: A-D
75Ø Ω ½ W. RESISTOR: B-H
JUMPERS: F-J, E-K, C-P

MODEL 37 TTY:
JUMPERS: C-D-H-R, L-F, M-E

1Ø UNIT TTY'S:
ALSO JUMPER: C-N

QTY.	DESCRIPTION	PART NO.	ITEM NO.

PARTS LIST

REV.	CHANGE NO.	CHK
P03	WIRE LISTED 2/23	
P04	REVISED 3/9/67	
P05	REVISED 3/13/67	
P06	REVISED 4/7/67	

REVISIONS

UNLESS OTHERWISE SPECIFIED
DIMENSION IN INCHES
TOLERANCES
DECIMALS ± .005 FRACTIONS ± 1/64 ANGLES ± 0°30'
FINAL SURFACE QUALITY √
REMOVE BURRS AND BREAK SHARP CORNERS

MATERIAL

FINISH

DRN. DATE 11/29/66
CHK'D DATE
ENG. DATE
PROJ. ENG. DATE
PROD. DATE
FIRST USED ON
SCALE
SHEET OF

digital EQUIPMENT CORPORATION
MAYNARD, MASSACHUSETTS

TITLE
TELETYPE CONTROL

SIZE D CODE B5 NUMBER TTY2 REV. P06

This drawing and specifications, herein, are the property of Digital Equipment Corporation and shall not be reproduced or copied or used in whole or in part as the basis for the manufacture or sale of items without written permission.

PULSES

WØ22	D	E	F	H	J	K	L	M	N	P	R	S	T	U	V
2E25	AR1-8 FM ARØ(J)	M BUS 2Ø	GND	M BUS 21	GND	M BUS 22	GND	M BUS 23	GND	M BUS 24	GND	M BUS 25	M BUS 26	GND	M BUS 27
2E44	M BUS 28	M BUS 29		M BUS 3Ø		M BUS 31		BRRT FM AR (Ø)		BRRT FM AR (1)		ARRT FM FM(1)	ARRT FM IOB(1)		ARRT FM DS(1)
2F44	FMT 3	M BUS 32		M BUS 33		M BUS 34		M BUS 35		MC MEM BUS FM AR1C		MQ SH LT D	MQ SH RT D		MQ FM AD(J)D
2B44	AR RT FM AD (Ø)	ARRT FM MQ (Ø)		ARRT FM PC (J) B		ARRT FM AD (1)		ARRT FM MQ (1)		ARRT FM ARLT(J)B		ARRT SH RT B	ARRT SH LT B		ARRT CLR
2H44	MQ CLR	ITØ		PCLT + 1		MA CLR		PCRT FM MA(J)		MA FM PC(J)B		MA FM AR (J) B	MA FM AS (J)B		MA FM PICH (1)
2B25	AR LT SH LT B	AR LT SH RT B		ARLT FM ARRT(J)B		ARLT FM AD (Ø)		ARLT CLR		ARRT FM ARLT (J)A		ARRT SH RT A	ARRT SH LT A		ARLT FM IR (1)
2C25	BRLT FM AR (Ø)	M BUS 12		ARLT FM MQ (Ø)		ARLT FM FLAGS(J)B		ARLT FM AD (1)		ARLT FM MQ (1)		ARLT FM FM (1)	ARLT FM IOB(1)		ARLT FM DS(1)
2D25	M BUS 13	M BUS 14		M BUS 15		MC MEM BUS FM AR1B		BRLT FM AR(1)		M BUS 16		M BUS 17	M BUS 18		M BUS 19
2F25	ETØ F	AR1-8 FM SCAD1-8(J)		M BUS 8		M BUS 9		M BUS 1Ø		M BUS 11		MC MEM BUS FM AR1 A	MQ SH LT B		MQ SH RT B
2DØ5	ARLT FM ARRT(J)A	ARLT SH RT A		BR 1-8 CLR		BR 1-8 SET		M BUS Ø		M BUS 1		M BUS 2	M BUS 3		ARLT SH LT A
2H25	MA FM PC(J) A	MA FM AR (J) A		MA FM AS (J) A		PCLT FM MA (1)		MQ SH LT C		MQ SH RT C		MQ FM AD (J) C	MQ FM AD (J) B		IR RT CLR
2P25	MI LOAD C	MI LOAD D		MR PWR CLR		PB CLR		ST9		FT9		KEY RUN CLR	ST 1		—
2S27	PIR FM IOB (1)	PIR STB		MC RSTØ DEL		MR CLR		MC ILLEG ADR		MC NON EX MEM		MC PAR ERR	MR START		KCTØ
2FØ5	MQ SH LT A	MQ SH RT A		MQ FM AD(J) A		M BUS 4		M BUS 5		M BUS 6		M BUS 7	ARØ-5 FM SCAD3-8(J)		IR LT CLR
2P12	PIOK CLRS PIH	FMA FM HI FM AR(J)		FMA FM LO FM AR(J)		MI LOAD A		MI LOAD B		PIH FM PIGH RQ		—	—		PI RESET B
1P12	BLT T2	MC RD RS		AT3		DST 7		MC FM RD RQ		MC FM WR RQ		MC NXM RD	ST5		ST6
1FØØ	DBT1	FAT 1		NRTØ		MPT 3		FMT 1		FAT 6		FAT 5	AT 3		FDT 2
1LØ5	AT6	ST8		AT4		IT 1		KEY RDI DONE		MR START A		NRT 4	SCT 4		ETØ
1E28	SC CLR	FDT 1		DST.1		BLT T1		DIV T2		SCT Ø		FDT 7	NRT 6		IOT T3B
1L35	FDT 1A	FT6		NRT 2		FDT 3		DST 3		DIV T4		FAT 7	BLT T2		KNT 2
1BØØ	FPTØ	NRT 1		NRT 3		BYT 1		SC + EN		SCAD SC+BR SETUP		KTØ A	FPT 1		BYT 7
1J41	DST 4	ST2		FMT 3		NRT 7		BYT 2		DIV T3		DIV T5	FDT 8		FAT 8
1C22	SCT 1	SRT 1		FAT 3		FAT 2		BYT 3		FDT 4		NLT 3	SCTØ		NRT 5
1SØ5	MR PWR CLR	FT Ø		ITØ		MC NXM RST		FMA T2		BYT 4		FDT 9	FT4		KT 3
1A3Ø	SC - EN	SCAD SC+1 SETUP		MR CLR		SC NEGATE SETUP		SCAD SC COMP SETUP		FPT 2		SCAD SC-BR SETUP	SCAD ALL DIS		—
1S21	ST2	MC RSTØ		MC ADR ACK		FT1		BYT 7A		MAI IGN PAR PULSE		PITØ	FT9		MC WR RQ PULSE
1K42	DBT 3	FT 7		FAT 3A		NLT 4		NLT 1		FDT 13		DST 5	DBT 2		DIV T1'
1K31	KNT 1	DBT 4		FDT 11		ST 7		MPT 4		MPT 2		FT 8	MST Ø		DIV TØ
1NØ5	—	LBT 1		DBT 5		IOT T4		IOT T5		FDT 14		NRT 99	KT 1		—
1CØ9	—	ST 1A		MR START		DST 2		MST 1		SCT 2		NLTØ	MCRST 1		MR CLR B
1J21	FDT 6	FAT 4		FDT 1Ø		FT 2		NLT 2		MC RD RQ PULSE		FT 5	FMA T1		KT 2
1C41	FDT 5	FE FM SCAD (1)		SC FM FE (1)		SC FM ARØ-8 (1)		SC FP SETUP		SC FM ARØ-5(1)		SC FM BR(1)	SC FM SCAD(J)		SC MD SETUP
1M25	FDT 12	MC RD/WR RQ PULSE		MC WR RS		FPT 3		KNT 3		MR CLR A		NRT 1Ø	SCT 3		ET 1
1R33	ST6A	KT4		MC RD/WR RS		ST1		MC RQ SET		KT3A		MC RQ PULSE	FT4A		FT3
1PØ6	ET2	—	GND	—	GND	—	GND	—	GND	ETØ E	GND	ET1	AT1	GND	ETØ E
1J42	ET1A	BLT T3	GND	SCT-3B	GND	ETØH	GND	AT2	GND	FT9	GND	ETØD	ET1C	GND	ET2C
1D11	ETØ B	ETØ A	GND	ET1B	GND	ETØ C	GND	—	GND	ET2A	GND	ET2B	ETØ	GND	ET2B
1T11	MAI CMC ADR ACK	MC BUS WR RS	GND	MC PARITY PULSE	GND	—	GND	—	GND	—	GND	—	—	GND	MAI CMC RD RS

LEVELS

G796	D	E	F	H	J	K	L	M	N	P	R	S	T	U	V
2L25	IOB Ø	IOB 1	IOB 2	IOB 3	IOB 4	IOB 5	IOB 6	IOB 7	IOB 8	IOB 9	IOB 1Ø	IOB 11	AR FOV(1)	IOT BLK	GND
2JØ5	IOB 12	IOB 13	IOB 26	IOB 27	IOB 28	IOB 29	IOB 3Ø	IOB 31	IOB 32	IOB 33	IOB 34	IOB 35	AD CRYØ(Ø)	AD CRYØ(1)	
2K25	IOB 14	IOB 15	IOB 16	IOB 17	IOB 18	IOB 19	IOB 2Ø	IOB 21	IOB 22	IOB 23	IOB 24	IOB 25	AR OV FLAG(1)	EX USER(1)	
2P18	IR 3(Ø)	IR 3(1)	IR 4(Ø)	IR 4(1)	IR 5(Ø)	IR 5(1)	IR G(Ø)	IR G(1)	IR 7(Ø)	IR 7(1)	IR 8(Ø)	IR 8(1)	AD CRYØ(Ø)	AD CRYØ(1)	
2N25	MAI FMA SEL(Ø)	EX REL A	MAI FMA SEL (1)	EX CLR	EX SET	—	—	—	—	—	—	—	—	—	
2E43	AD CRY INS (Ø)	AD CRY 36(Ø)	AD AD+EN(1)	AD AR-EN(1)	AD BR+EN(1)	AD BR-EN(1)	PC 2Ø(1)	PC 21(1)	PC 29(1)	IR ASHC	ADØ(1)	ADØ(Ø)	—	—	
1D21	IR FSB	IR IBP	IR DFN	BR 4(1)	AR 1(1)	IR FDVX	IR G(Ø)	ADØ(1)	IR TEST	ST INH	IR 1(1)	IR BOOLE	IR UFA	IR 6(1)	
1EØ9	IR ILDB	IR IDPB	SC STOP SW	IR DPB	IR UFA	IR LDB	SC STOP(Ø)	IR FSC	IR 1(Ø)	IR IDIV	—	ADØ B (Ø)	ADØ B(1)	BRØ(Ø)	
1HØ4	IR XMUL	IR 3XX	IR JSA	IR POPS	IR TXCX	IR TXOX	IR JRA	HWT E LONG	IR 3(1)	BRØ(1)	IR DFN	IR XMUL	IR 6(Ø)	IR BLT	
1J15	BYF4(1)	IR FAD	FAF 4 (1)	IR PUSH	IR AOBJN	IR BLT	IR 8(1)	IR 7(Ø)	IR 7(1)	IR 3(Ø)	IR BOOLE 17	IR JSR	IR 8(Ø)	—	
1L18	BYF 5(Ø)	IR FAD	IR ROTC	IR POP	BR 18(1)	IR 4(1)	ARØB(Ø)	IR FP LONG	KEY RIM(1)	—	—	—	ARØD(1)	DSF1(1)	
1RØ8	IR 21X	IR4(Ø)	IR EXCH	—	—	—	—	—	—	—	—	—	MA 19-31 = Ø	AS COND	
1R18	BR6(1)	BR6(Ø)	BR5(1)	BYTE PTR INC	BYTE PTR NOT INC	LB BYTE LOAD	DB BYTE DEP	—	—	—	—	MA 18-31 = Ø	IR 13(1)	IR 13(Ø)	GND

BACK PANEL

LEVEL	NAME	POINT	COMPONENT	POINT
	AD 35 (1)	2DØ6L	D664	2DØ6C
	AR MQ RP SHEN	2H16M	D664	2H16C
	KEY RIM(1)	2J2ØE	D664	2J19C

PULSE	NAME	POINT	COMPONENT	POINT
	PCRT+1	2H41M	1ØØΩ	2J41C
	ARLT FM FLAGS(J)A	2D14L	1ØØΩ	2D14C
	ARRT FM PC(J)A	2D33L	1ØØΩ	2D33C
	ARF CRY STB	1K21T	1ØØΩ	1K21C
	ARF FLAGS FM BR (J)	1C14J	1ØØΩ	
	BYT6	1B27U	1ØØΩ	
	IOT T1	1S34T	1ØØΩ	
	MI TØ	1R37L	1ØØΩ	
	MI T1	1R32J	1ØØΩ	
	AR OV SET	1L22L	1ØØΩ	

REVISIONS

CHK	CHANGE NO.	REV.
	REVISED 3/31	PØ1
	REVISED 4/6/67	PØ2
	REVISED 4/11/67	PØ3
	REVISED 4/17/67	PØ4
	REVISED 4/25/67	PØ5
	REVISED 5/13/67	PØ6
	REVISED 5/25/67	PØ7
	REVISED 6/5/67	PØ8

QTY.	DESCRIPTION	PART NO.	ITEM NO.

PARTS LIST

UNLESS OTHERWISE SPECIFIED

UNLESS OTHERWISE SPECIFIED
DIMENSION IN INCHES
TOLERANCES
DECIMALS ± .005 FRACTIONS ± 1/64 ANGLES ± 0°30'
FINAL SURFACE QUALITY √
REMOVE BURRS AND BREAK SHARP CORNERS

MATERIAL

FINISH

DRN. DR Stephenson DATE 3/30/67
CHK'D. DATE
ENG. DATE
PROJ. ENG. DATE
PROD. DATE
FIRST USED ON
SCALE
SHEET OF

digital EQUIPMENT CORPORATION
MAYNARD, MASSACHUSETTS

TITLE
PULSE & LEVEL TERMINATIONS (BAY 1 & BAY 2)

SIZE D CODE NUMBER D- -TERM REV. PØ8

DIST

This drawing and specifications, herein, are the property of Digital Equipment Corporation and shall not be reproduced or copied or used in whole or in part as the basis for the manufacture or sale of items without written permission.

INSTRUCTION	BOOLE	ADD SUBTRACT	FWT	HWT $-H^{LR}_{RL}-\binom{-}{I}$	HWT $H^{LR}_{RL}-\binom{-}{I}$	EXCH	UUO
INITIAL SWITCHES	BOOLE 2,1Ø,13,16: E LONG BOOLE Ø,3,14,17: FAC INH BOOLE Λ-(Ø,5,12,17)Λ XXX-: FCE BOOLE Λ-(Ø,5,12,17)Λ XXX$^{M}_{B}$: FCE PSE	EFØ LONG XXX-: FCE XXX$^{M}_{B}$: FCE PSE	MOV$^{M}_{N}$X: EFØ LONG MOVX$^{I}_{S}$: FAC INH MOVX-: FCE MOVXS: FCE PSE	HXXXS V HXX$^{O-}_{ZI}{}_{ES}$: FAC INH HXXX-: FCE HXXXS V HXX-M: FCE PSE	E LONG	FCE PSE	FAC INH PC+1 INH
INITIAL REGISTERS	AR; C(AC) or % BR; (Ø, E) or C(E) MA; E	AR; C(AC) BR; (Ø, E) or C(E) MA; E	AR; C(AC) or (Ø, E) or C(E) BR; (Ø, E) or C(E) MA; E	AR; C(AC) or (Ø, E) or C(E) BR; (Ø, E) or C(E) NOTE: IF HWT IS F(1 OPERAND), OPERAND IS IN AR. IF TWO OPERANDS, MEM IS IN BR, AC IS IN AR	AR; C(AC) BR; C(E) or (Ø, E)	AR; C(AC) BR; C(E)	MA; Ø AR; Ø, E IR; INST
FT9	BOOLE 6,11,12,17: AD AR-EN SET BOOLE 1,6,7,1Ø,16: AD BR+EN SET BOOLE 2,4,11,13,14,15: AD BR-EN SET BOOLE 6,11: AD CRY INS SET	AD AR+EN SET ADDX: AD BR+EN SET SUBX: AD BR-EN SET AD CRY 36 SET	MOV$^{N}_{M}$X: AD AR NEGATE	AD BR+EN SET HXXOX V HXXEX: AD BR± EN		AD BR+ EN SET	
ETØ	BOOLE Ø,6,11,12,14: AR FM AD(J) BOOLE 1,4,13,16: AR FM AD[Ø] BOOLE 2,7,1Ø,15,17: AR FM AD[1]	AR FM AD(J) ARF CRY STB	MOVSX: AR SWAP MOVNX V (MOVMX Λ ARØ(1)): AR FM AD(J) ARF CRY STB	HLRXX: ARRT FM ARLT(J) HRLXX: ARLT FM ARRT (J) HXLOX V (HXLEX Λ HWT E TEST) V HXL-M V HXR-$\frac{-}{I}$: ARRT FM AD(J) HXROX V (HXREX Λ HWT E TEST) V HXR-M V HXL-$\frac{-}{I}$: ARLT FM AD(J) HXLZX V (HXLEX Λ -HWT E TEST): ARRT CLR HXRZX V (HXREX Λ -HWT E TEST): ARLT CLR	AR FM AD(J) BR FM AR(J) AD BR + ONLY EN	AR FM AD(J) BR FM AR(J)	ARLT FM IRØ-12[1] MA3Ø SET IR2(1) V IR3(1): EX ILL OP SET EXCTF SET EUUOF SET IR1XX: MA31 SET
ET1	AD CRY INS CLR AD AR-EN SET AD BR+EN CLR AD BR-EN CLR				HLRXX: ARRT FM ARLT(J) HRLXX: ARLT FM ARRT(J) HXRXX: ARLT FM AD(J) HXLXX: ARRT FM AD(J)		
ET2	AR FM AD(J)						
FINAL SWITCHES	XXXM: SAC INH	XXXM: SAC INH	MOVXM: SCE MOVXS Λ AC(Ø) V MOVXM: SAC INH	(HXXXS Λ AC=Ø) V HXXXM: SAC INH HXX$^{O}_{Z}{}_{E}$M: SCE		SAR ≠ BR	SCE SAC INH

NOTES:

1. UUO = (IR JRST A Λ - EX ALLOW IOTS Λ IR9(1)) V (IR JRST A Λ - EX ALLOW IOTS Λ IR1Ø(1)) V (IR IOT A Λ - EX ALLOW IOTS Λ EX PI SYNC(Ø)) V (IRØ(Ø) Λ IR1(Ø) Λ IR2(Ø))*
   * OPEN IR2(Ø) FROM TERM TO DISABLE FLOATING POINT HARDWARE
2. FLAGS:
   - Ø) AR OV FLAG
   - 1) AR CRY Ø FLAG
   - 2) AR CRY 1 FLAG
   - 3) AR FOV
   - 4) BYFG
   - 5) EX USER (SAVED)
EX MODE SYNC (RESTORE)
   - 6) EX IOT USER (CANNOT BE TURNED ON IN USER MODE)
   - 7)
   - 8)
   - 9)
   - 10)
   - 11) AR FXU
   - 12) AR DCK
3. AR OV COND = (AD CRY Ø(Ø) Λ AD CRY 1(1)) V (AD CRY Ø(1) Λ AD CRY 1(Ø))
4. HWT E TEST = (IR3(Ø) Λ IR6(Ø) Λ ARØ(1)) V (IR3(1) Λ IR6(1) Λ ARØ(1)) V (IR3(Ø) Λ (IR6(1) Λ AR18(1)) V (IR3(1) Λ IR6(Ø) Λ AR18(1))
5. ARF CRY STB
   - Λ AR OV COND : AR OV FLAG SET
   - Λ AD CRY Ø(1) : AR CRY Ø FLAG SET
   - Λ AD CRY 1(1) : AR CRY 1 FLAG SET

QTY.	DESCRIPTION	PART NO.	ITEM NO.

PARTS LIST

REVISIONS		
CHANGE NO.	REV.	CHK
REDRAWN 11-10-66	PØ2	
REVISED 2/27	PØ3	

UNLESS OTHERWISE SPECIFIED
DIMENSION IN INCHES
TOLERANCES
DECIMALS ± .005 FRACTIONS ± 1/64 ANGLES ± 0°30'
FINAL SURFACE QUALITY ✓
REMOVE BURRS AND BREAK SHARP CORNERS
MATERIAL
FINISH

DRN. [signature] DATE 11-10-66
CHKD. DATE
ENG. DATE
PROJ. ENG. DATE
PROD. DATE
FIRST USED ON
SCALE
SHEET OF

digital EQUIPMENT CORPORATION MAYNARD, MASSACHUSETTS

TITLE: BASIC INSTRUCTION FLOW

SIZE: D CODE: FD NUMBER: BIF1 REV. PØ3

DIST.

This drawing and specifications, herein, are the property of Digital Equipment Corporation and shall not be reproduced or copied or used in whole or in part as the basis for the manufacture or sale of items without written permission.

INSTRUCTION	JSR	JSP	JSA AC FM (E PC+1) E FM C(AC) PC FM E+1	JRA AC FM C(C(ACLT)) PC FM E	JFCL	JRST	TEST	AOBJX
INITIAL SWITCHES	FAC INH E LONG	FAC INH	E LONG	FC C ACLT E LONG	FAC INH	FAC INH IR 1Ø (1) : E LONG	TDXX: FCE TSXX: FCE E LONG	EFØ LONG
INITIAL REGISTERS	AR; Ø, E BR; Ø, E MA; E	MA; E	AR; C(AC) BR; (Ø, E) MA; E	AR; AC SWAPPED BR; (Ø, E) MQ; C(C(ACLT)) MA; C(ACLT)	MA; E	MA; E BR; LAST MEM REF (FLAGS LT HALF)	AR; C(AC) BR; (Ø, E) C(E); MASK	AR; C(AC) MA; E
FT9			AD BR+EN	AD BR+EN			TXOX: AD BR+EN SET TXCX: AD AR+EN SET TX$^{Z}_{C}$X: AD BR-EN SET TXCX: AD CRY INS SET	AD AR+EN SET AD+1 BOTH
ETØ	PC FM MA(J) ARRT FM PC(J) ARLT FM FLAGS(J)	PC FM MA(J) ARRT FM PC(J) ARLT FM FLAGS(J)	ARRT FM PC(J); PC+1 BR FM AR(J); C(AC) PC FM MA(J); E	AR FM AD(J); (Ø, E)	CONDITION Z; PC FM MA(J) IR9(1): AR OV CLR IR1Ø(1): AR CRY Ø CLR IR 11(1): AR CRY 1 CLR IR 12(1): AR FOV CLR	AR FM PC(J) PC FM MA(J) IR12(1): EX MODE SYNC SET IR11(1): ARF FLAGS FM BR(J) IR9(1): PIOK CLEARS PIH IR1Ø(1): RUN CLR	T$^{S}_{L}$XX: AR SWAP	AR FM AD(J) (AOBJN ∧ ADØ(1)) : PC FM MA(J) (AOBJP ∧ ADØ(Ø)) : PC FM MA(J)
ET1			ARLT FM ARRT(J); PC+1 ARRT FM PC(J); E	MA FM AR(J); E AR FM MQ(J); C(C(ACLT))		MA FM AR (J)	AD CRY INS CLR BR FM AR[Ø] TX$^{O}_{C}$X: AR FM AD[1] TX$^{C}_{Z}$X: AR FM AD[Ø] AD BR-EN CLR AD BR+EN SET AD AR+EN CLR	
ET2	PC+1 ; E+1		PC+1; E+1 AR SWAP	PC FM MA(J); E			T$^{S}_{L}$XX: AR SWAP TXXA V (TXXE ∧ AD=Ø) V (TXXN ∧ AD≠Ø): PC+1	
FINAL SWITCHES	SCE SAC INH		SAR≠BR		SAC INH	SAC INH	TXNX: SAC INH	

NOTES:

1. CONDITION Z = (IR9(1) ∧ AR OV(1)) V (IR1Ø(1) ∧ AR CRY Ø FLAG (1)) V (IR11(1) ∧ AR CRY 1 FLAG (1)) V (IR12(1) ∧ AR FOV(1))
2. FLAGS:
   - Ø) AR OV FLAG
   - 1) AR CRY Ø FLAG
   - 2) AR CRY 1 FLAG
   - 3) AR FOV
   - 4) BYF6
   - 5) EX USER (SAVED)
EX MODE SYNC (RESTORE)
   - 6) EX IOT USER (CANNOT BE TURNED ON IN USER MODE)
   - 7)
   - 8)
   - 9)
   - 1Ø)
   - 11) AR FXU
   - 12) AR DCK

QTY.	DESCRIPTION	PART NO.	ITEM NO.

PARTS LIST

UNLESS OTHERWISE SPECIFIED
DIMENSION IN INCHES
TOLERANCES
DECIMALS ±.005 FRACTIONS ±1/64 ANGLES ±0°30'
FINAL SURFACE QUALITY ✓
REMOVE BURRS AND BREAK SHARP CORNERS

MATERIAL

FINISH

DRN. Ajorea	DATE 11-11-66	
CHK'D.	DATE	
ENG.	DATE	
PROJ. ENG.	DATE	
PROD.	DATE	
FIRST USED ON		
SCALE		
SHEET	OF	

digital EQUIPMENT CORPORATION MAYNARD, MASSACHUSETTS

TITLE: BASIC INSTRUCTION FLOW

SIZE	CODE	NUMBER	REV.
D	FD	BIF2	PØ3

DIST.

REVISIONS CHANGE NO.	REV.	CHK
REDRAWN 11-11-66	PØ2	
REVISED 2/27/67	PØ3	

DEC FORM NO.

This drawing and specifications, herein, are the property of Digital Equipment Corporation and shall not be reproduced or copied or used in whole or in part as the basis for the manufacture or sale of items without written permission.

INSTRUCTION	SKIP (AOSX, SKIPX, SOSX)	JUMP (AOJX, JUMPX, SOJX)	CAM, CAI	PUSH	PUSH J	POP	POPJ	XCT
INITIAL SWITCHES	EFØ LONG XOSX: FCE PSE SKIPX: FCE FAC INH	EFØ LONG	EFØ LONG CAMX: FCE	EFØ LONG FCE E LONG	EFØ LONG E LONG	EFØ LONG FC C ACRT E LONG		FAC INH PC+1, INH
INITIAL REGISTERS	AR; C(E)	AR; C(AC) MA; E	AR; C(AC) BR; (Ø, E) OR C(E)	AR; C(AC) BR; C(E) MA; E	AR; C(AC) BR; E MA; E MQ; Ø	AR: C (AC) BR: (Ø, E) MQ; (C(ACRT)) MA; C(ACRT)		MA; E
FT9	AD AR+EN SET AOXX: CRY36 SOXX: AD BR+EN SET AD BR-EN SET		AD MINUS BR AD AR+EN SET	AD AR+EN SET AD CRY 36 SET AD+1 LH SET		AD AR+EN SET AD BR+EN AD-1 LH SET		
ETØ	AR FM AD(J) PC COND P V PC COND R: PC+1	AR FM AD(J) PC COND P V PC COND R: PC FM MA(J)	AR FM AD(J) PC COND P V PC COND Q: PC+1	AR FM AD(J) AD CRYØ: CPA PDL OV SET	AR FM PC FLAGS(J) MQ FM AD(J) PC FM MA(J) AD CRYØ: CPA PDL OV SET	MQ FM AD(J) AR FM MQ(J) -AD CRYØ: CPA PDL OV SET AD AR+ ONLY EN		EXCTF SET
	XOXX ∧ { AR OV COND: AR OV FLAG SET V AD CRYØ(1): AR CRY Ø FLAG SET V AD CRY1(1): AR CRY 1 FLAG SET							
ET1				MA FM AR(J)	BR FM AR(J) AR FM MQ(J)	AR FM AD(J) BR FM AR(J)	MA FM AR(J) AR FM MQ(J)	
ET2					MA FM AR(J)	MA FM AR(J) AR FM MQ(J)	PC FM MA(J)	
FINAL SWITCHES	AC=Ø: SAC INH	JUMPX: SAC INH	SAC INH	SAR≠BR	SAR≠BR	SAR≠BR		SAC INH

NOTES:

1. PC COND P = (IR6(Ø) ∧ AD = Ø ∧ IR7(1)) V (IR6(1) ∧ IR7(Ø) ∧ IR8(Ø)) V (IR6(1) ∧ − AD = Ø ∧ IR8(Ø))
   PC COND Q = (IR6(Ø) ∧ AD COND ∧ IR8(1)) V (IR6(1) ∧ IR7(Ø) ∧ − AD COND) V (IR6(1) ∧ − AD = Ø ∧ − AD COND)
   PC COND R = (IR6(Ø) ∧ IR8(1) ∧ ADØ(1)) V (IR6(1) ∧ IR7(Ø) ∧ ADØ(Ø)) V (IR6(1) ∧ − AD = Ø ∧ ADØ(1))
2. AR OV COND = (AD CRYØ(Ø) ∧ AD CRY1(1)) V (AD CRYØ(1) ∧ AD CRY1(Ø))
3. AD COND = (ADØ(1) ∧ AD CRYØ(1) ∧ AD CRY1(1)) V (ADØ(1) ∧ AD CRYØ(Ø) ∧ AD CRY1(Ø)) V (ADØ(Ø) ∧ AD CRYØ(1) ∧ AD CRY1(Ø))
   V (ADØ(Ø) ∧ AD CRYØ(Ø) ∧ AD CRY1(1))

REVISIONS	CHK	CHANGE NO.	REV.
		REDRAWN 11-14-66	PØ2
		REVISED 2/27/67	PØ3

UNLESS OTHERWISE SPECIFIED
DIMENSION IN INCHES
TOLERANCES
DECIMALS ± .005 FRACTIONS ± 1/64 ANGLES ± 0°30'
FINAL SURFACE QUALITY ✓
REMOVE BURRS AND BREAK SHARP CORNERS

MATERIAL

FINISH

QTY.	DESCRIPTION	PART NO.	ITEM NO.
	PARTS LIST		

		DATE
DRN.	[illegible]	11-14-66
CHK'D.		
ENG.		
PROJ. ENG.		
PROD.		

FIRST USED ON

SCALE

SHEET OF

digital EQUIPMENT CORPORATION
MAYNARD, MASSACHUSETTS

TITLE
BASIC INSTRUCTION FLOW

SIZE	CODE	NUMBER	REV.
D	FD	BIF3	PØ3

DIST.

DEC FORM NO.

This drawing and specifications, herein, are the property of Digital Equipment Corporation and shall not be reproduced or copied or used in whole or in part as the basis for the manufacture or sale of items without written permission.

DEVICE NAME	ABBREV	DEV #	FUNCTION	18	19	2Ø	21	22	23	24	25	26	27	28	29	3Ø	31	32	33	34	35	DATAI/DATAO ACTIONS
PROCESSOR	CPA	ØØØ	CONO	CPA PDL OV CLR	IOB RESET	—	CPA ADR BREAK CLR	CPA MEM PROT FLAG CLR	CPA NON EX MEM CLR	CPA CLK EN CLR	CPA CLK EN SET	CPA CLK FLAG CLR	CPA FOV EN CLR	CPA FOV EN CLR	AR FOV CLR	CPA AR OV EN CLR	CPA AR OV EN SET	AR OV CLR	CPA PIA 33	CPA PIA 34	CPA PIA 35	
			CONI	—	CPA PDL OV (1)	EX IOT USER(1)	CPA ADR BREAK (1)	CPA MEM PROT FLAG (1)	CPA NON-EX MEM(1)	—	CPA CLK EN (1)	CPA CLK FLAG (1)	—	CPA FOV EN (1)	AR FOV(1)	—	CPA AR OV EN(1)	AR OV (1)	CPA PIA 33	CPA PIA 34	CPA PIA 35	
			DATAO LEFT HALF	PRØ	PR1	PR2	PR3	PR4	PR5	PR6	PR7	—	—	—	—	—	—	—	—	—	—	NONE
			DATAO RIGHT HALF	RL18	RL19	RL2Ø	RL21	RL22	RL23	RL24	RL25	—	—	—	—	—	—	—	—	—	—	
			DATAI LEFT/RIGHT	DSØ/DS18	DS1/DS19	DS2/DS2Ø	DS3/DS21	DS4/DS22	DS5/DS23	DS6/DS24	DS7/DS25	DS8/DS26	DS9/DS27	DS1Ø/DS28	DS11/DS29	DS12/DS3Ø	DS13/DS31	DS14/DS32	DS15/DS33	DS16/DS34	DS17/DS35	NONE
PRIORITY INTERRUPT SYSTEM	PI	ØØ4	CONO	CPA PWR FAIL CLR	CPA PAR ERR CLR	CPA PAR EN CLR	CPA PAR EN SET	—	PI RESET	PIR FM IOB[1]	PIO(1) FM IOB[1]	PIO(Ø) FM IOB[1]	PI ACT CLR	PI ACT SET	PI 1 SELECT	PI 2 SELECT	PI 3 SELECT	PI 4 SELECT	PI 5 SELECT	PI 6 SELECT	PI 7 SELECT	
			CONI	CPA PWR FAIL (1)	CPA PAR ERR (1)	CPA PAR EN (1)	PIH 1 (1)	PIH 2 (1)	PIH3 (1)	PIH4 (1)	PIH5 (1)	PIH6 (1)	PIH7 (1)	PI ACT (1)	PIO1 (1)	PIO2 (1)	PIO3 (1)	PIO4 (1)	PIO5 (1)	PIO6 (1)	PIO7 (1)	
			DATAO LT/RT	MI Ø/18	MF 1/19	2/2Ø	MI 3/21	4/22	5/23	MF 6/24	7/25	8/26	MI 9/27	1Ø/28	11/29	MI 12/3Ø	13/31	14/32	MI 15/33	16/34	17/35	DATAO SET MI PROG
PAPER TAPE PUNCH	PTP	1ØØ	CONO	—	—	—	—	—	—	—	—	—	—	—	—	PTP BIN	PTP BUSY	PTP DONE	PTP PIA 33	PTP PIA 34	PTP PIA 35	
			CONI	—	—	—	—	—	—	—	—	—	—	—	PTP NO TAPE	PTP BIN(1)	PTP BUSY(1)	PTP DONE(1)	PTP PIA 33 (1)	PTP PIA 34 (1)	PTP PIA 35 (1)	
			DATAO	—	—	—	—	—	—	—	—	—	—	PTP HOLE 8	PTP HOLE 7	PTP HOLE 6	PTP HOLE 5	PTP HOLE 4	PTP HOLE 3	PTP HOLE 2	PTP HOLE 1	PTP DONE CLR PTP BUSY SET
PAPER TAPE READER	PTR	1Ø4	CONO	—	—	—	—	—	—	—	—	—	—	—	PTR EOT	PTR BIN	PTR BUSY	PTR DONE	PTR PIA 33	PTR PIA 34	PTR PIA 35	
			CONI	—	—	—	—	—	—	—	—	—	—	—	PTR EOT (1)	PTR BIN (1)	PTR BUSY (1)	PTR DONE (1)	PTR PIA 33 (1)	PTR PIA 34 (1)	PTR PIA 35 (1)	
			DATAI LEFT/RIGHT	PTRØ/PTR18	PTR1/PTR19	PTR2/PTR2Ø	PTR3/PTR21	PTR4/PTR22	PTR5/PTR23	PTR6/PTR24	PTR7/PTR25	PTR8/PTR26	PTR9/PTR27	PTR1Ø/PTR28	PTR11/PTR29	PTR12/PTR3Ø	PTR13/PTR31	PTR14/PTR32	PTR15/PTR33	PTR16/PTR34	PTR17/PTR35	PTR DONE CLR PTR BUSY SET
TELETYPE	TTY	12Ø	CONO	—	—	—	—	—	—	—	TTI BUSY CLR	TTI FLAG CLR	TTO BUSY CLR	TTO DONE CLR	TTI BUSY SET	TTI FLAG SET	TTO BUSY SET	TTO DONE SET	TTY PIA 33	TTY PIA 34	TTY PIA 35	
			CONI	—	—	—	—	—	—	—	—	—	—	—	TTI BUSY (1)	TTI FLAG (1)	TTO BUSY (1)	TTO DONE (1)	TTY PIA 33 (1)	TTY PIA 34 (1)	TTY PIA 35 (1)	
			DATAO	—	—	—	—	—	—	—	—	—	—	TTO Ø	TTO 1	TTO 2	TTO 3	TTO 4	TTO5	TTO6	TTO7	TTO DONE CLR TTO BUSY SET
			DATAI	—	—	—	—	—	—	—	—	—	—	TTI Ø	TTI 1	TTI 2	TTI 3	TTI 4	TTI 5	TTI 6	TTI 7	TTI FLAG CLR
				Ø	1	2	3	4	5	6	7	8	9	1Ø	11	12	13	14	15	16	17	
PROGRAM COUNTER FLAGS SAVED BY JSP, ETC.				AR OV FLAG(1)	AR CRY Ø FLAG(1)	AR CRY1 FLAG(1)	AR FOV(1)	BYF6 (1)	EX USER (1)	CPA IOT USER(1)	—	—	—	—	AR FXU(1)	AR DCK(1)	— *	— *	— *	— *	— *	

* THESE BITS NOT AVAILABLE FOR FLAGS SINCE THEY WILL CAUSE ADDRESS MODIFICATION WHEN INDIRECTED THRU

REVISIONS	CHANGE NO.	REV.	CHK
	PRE-RELEASE 11/1/66	PØ1	
	REVISED 2/27/67	PØ2	
	REVISED 3/31/67	PØ3	

QTY.	DESCRIPTION	PART NO.	ITEM NO.
	PARTS LIST		

UNLESS OTHERWISE SPECIFIED

UNLESS OTHERWISE SPECIFIED DIMENSION IN INCHES
TOLERANCES
DECIMALS ± .005 FRACTIONS ± 1/64 ANGLES ± 0°30'
FINAL SURFACE QUALITY ✓
REMOVE BURRS AND BREAK SHARP CORNERS

MATERIAL

FINISH

DRN. Sapreo DATE 3/31/66
CHK'D. DATE
ENG. DATE
PROJ. ENG. DATE
PROD. DATE
FIRST USED ON
SCALE
SHEET OF

DIGITAL EQUIPMENT CORPORATION
MAYNARD, MASSACHUSETTS

TITLE
BASIC I-O REGISTERS

SIZE	CODE	NUMBER	REV.
D	FD	KA1Ø-O-BIOR	PØ3

DIST.

DEC FORM NO.

This drawing and specifications, herein, are the property of Digital Equipment Corporation and shall not be reproduced or copied or used in whole or in part as the basis for the manufacture or sale of items without written permission.

INSTRUCTION	BYTE (FIRST PART BYF5(Ø))		BYTE (SECOND PART BYF5(1)) XLDB	XDPB
INITIAL SWITCHES	FAC INH BYTE PTR INC: FCE PSE BYTE PTR NOT INC: FCE -IR IBP: PC+1 INH BYTE PTR INC ∨ BYTE PTR NOT INC: ST INH		FAC INH FCE ST INH	FCE ST INH
INITIAL REGISTERS	AR;C(E); POINTER BR;C(E); POINTER IR 13-17;C(E 13-17); I, X OF POINTER		AR;C(E); DATA WORD BR;C(E); DATA WORD SC;P MQ;MASK	AR;C(AC);BYTE BR;C(E): DESTINATION WORD SC;P MQ;MASK
FTØ	BYTE PTR INC: AD AR+EN SET AD CRY 36 SET			
ETØ			SC FM SCAD(J);-P ;CALL SC SBR	SC FM SCAD(J);-P ;CALL SC SBR
FINAL SWITCHES	IBP: SAC INH			SAC INH SCE

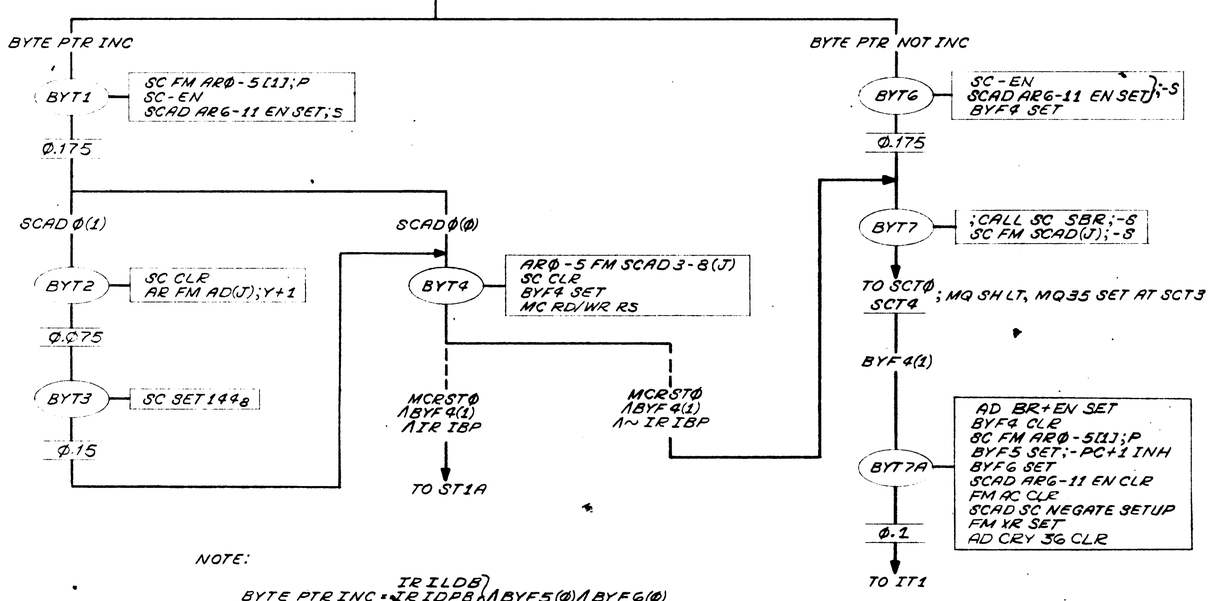

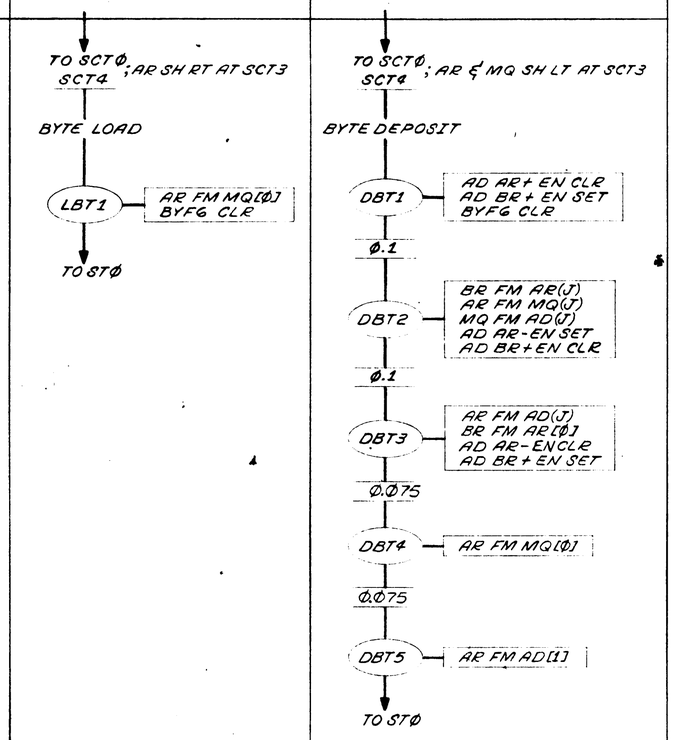

NOTE:

BYTE PTR INC = (IR ILDB ∨ IR IDPB ∨ IR IBP) ∧ BYF5(Ø) ∧ BYF6(Ø)

BYTE PTR NOT INC = ((IR LDB ∨ IR DPB) ∧ (BYF5(Ø)) ∨ (IR 134-137 ∧ BYF6(1) ∧ BYF5(Ø))
[(IBP ∧ BYF6(1)) IS NOT INCLUDED IN EITHER CASE]

BYTE LOAD = (IR ILDB ∨ IR LDB) ∧ BYF5(1)

BYTE DEPOSIT = (IR IDPB ∨ IR DPB) ∧ BYF5(1)

REVISIONS	CHK	CHANGE NO.	REV.
		REDRAWN 7/18/66	PØ1
		REVISED 2/27/67	PØ2
		REVISED 3/27/67	PØ3
		REVISED 4/5/67	PØ4
		REVISED 5/5/67	PØ5
		REVISED 6/5/67	PØ6

QTY.	DESCRIPTION	PART NO.	ITEM NO.
	PARTS LIST		

UNLESS OTHERWISE SPECIFIED

UNLESS OTHERWISE SPECIFIED
DIMENSION IN INCHES
TOLERANCES
DECIMALS ± .005 FRACTIONS ± 1/64 ANGLES ± 0°30'
FINAL SURFACE QUALITY ✓
REMOVE BURRS AND BREAK SHARP CORNERS

MATERIAL

FINISH

DRN.		DATE 11-8-66
CHK'D.		DATE
ENG.		DATE
PROJ. ENG.		DATE
PROD.		DATE
FIRST USED ON		
SCALE		
SHEET	OF	

digital EQUIPMENT CORPORATION
MAYNARD, MASSACHUSETTS

TITLE
BYTE INSTRUCTION FLOW

SIZE	CODE	NUMBER	REV.
D	FD	BYTF	PØ6

DIST.

DEC FORM NO.

This drawing and specifications, herein, are the property of Digital Equipment Corporation and shall not be reproduced or copied or used in whole or in part as the basis for the manufacture or sale of items without written permission.

INSTRUCTION	IDIVX	DIVX
INITIAL SWITCHES	-IDIVI: FCE EFØ LONG E LONG ST INH	FAC2 -DIVI: FCE ST INH
INITIAL REGISTERS	AR; C(AC); DIVIDEND BR; Ø, E OR C(E); DIVISOR MQ; Ø	AR; C(AC); HIGH DIVIDEND BR; Ø, E OR C(E); DIVISOR MQ; C(AC2); LOW DIVIDEND
FT9	AD AR NEGATE	AD AR-EN SET
ETØ	ARØB(1): AR FM AD(J); -DVND DSF7 SET SC MD SETUP AD AR-EN CLR AD AR+EN SET AD CRY 36 CLR	SC MD SETUP (TO DIVT Ø)
ET1	MQ FM AD(J) AR CLR	
ET2	MQ SH LT (TO DST 1)	
FINAL SWITCHES	XDIVM: SAC INH XDIV(I/B): SAC 2 XDIV(M/B): SCE	

FIXED POINT DIVIDE

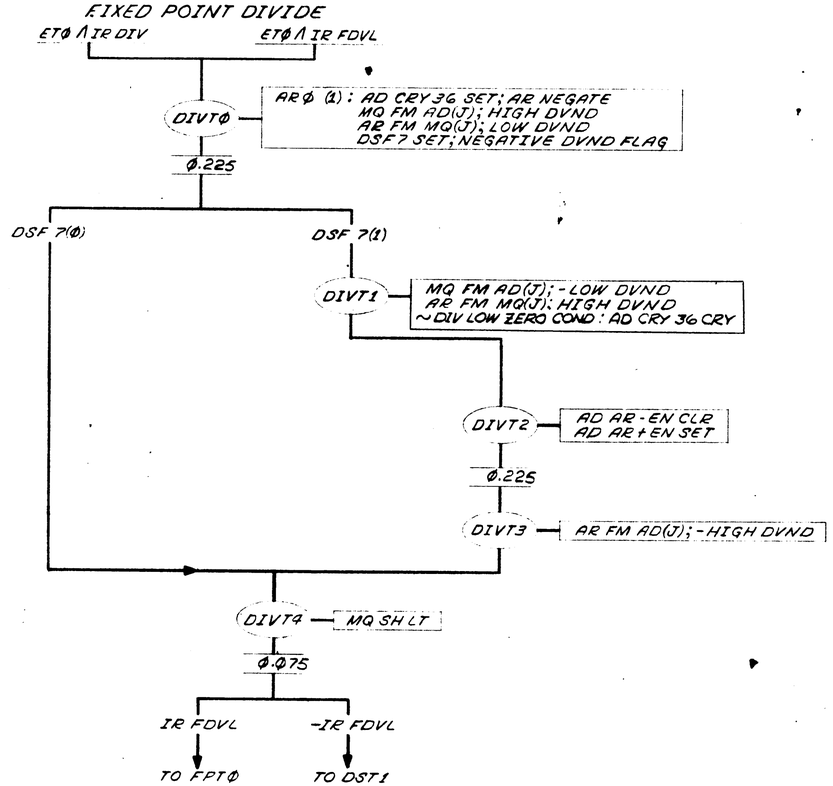

DIVIDE SUBROUTINE

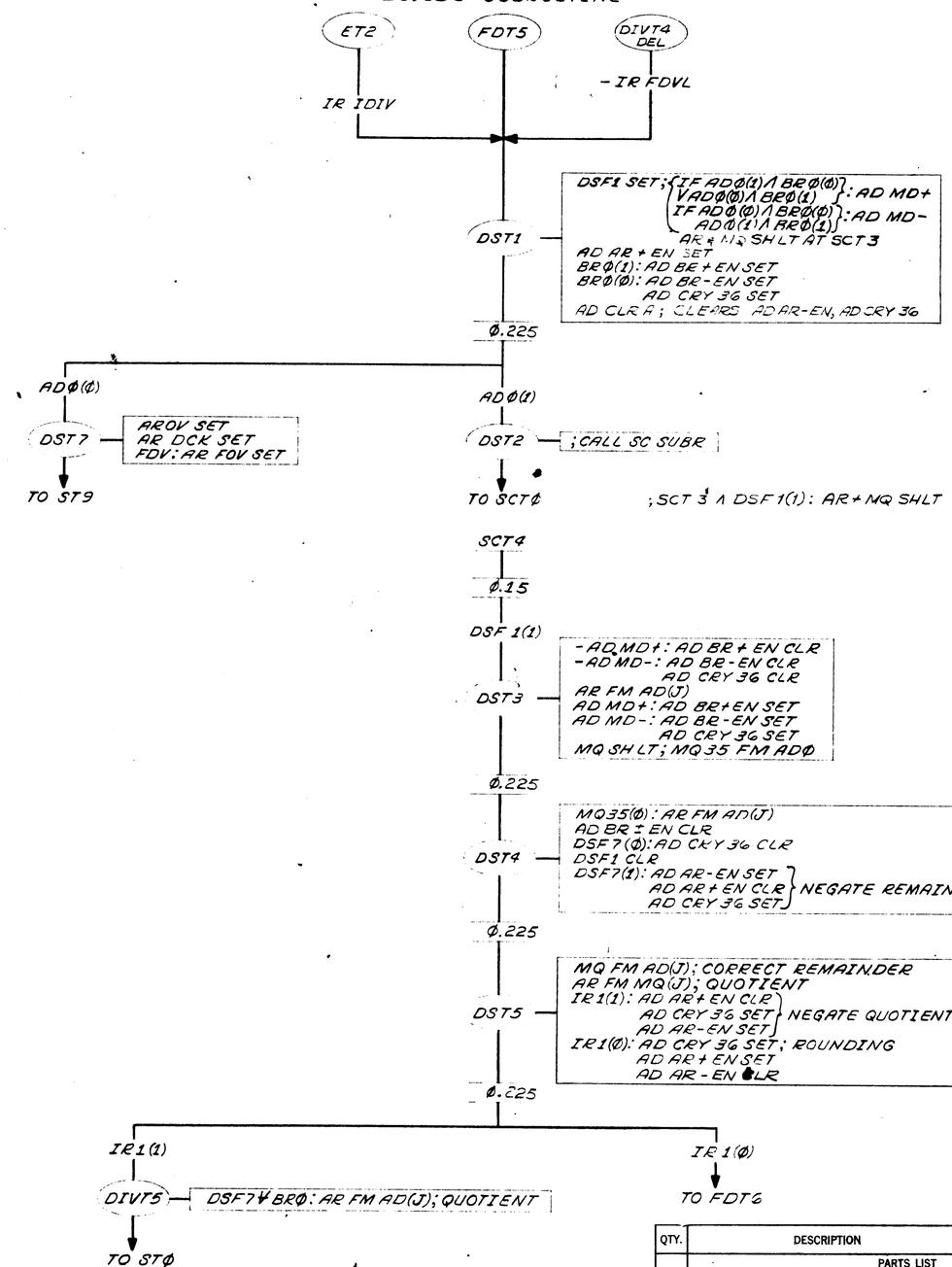

DIV LOW ZERO COND = (IR1(Ø) ∧ AD8-35 = Ø) ∨ (IR1(1) ∧ AD CRY 1)

REV.	CHANGE NO.	CHK
P01	REDRAWN 11-1-64	
P02	REVISED 2/25/67	
P03	REVISED 3/31/67	
P04	REVISED 9/5/67	

QTY.	DESCRIPTION	PART NO.	ITEM NO.
	PARTS LIST		

UNLESS OTHERWISE SPECIFIED
UNLESS OTHERWISE SPECIFIED
DIMENSION IN INCHES
TOLERANCES
DECIMALS ± .005 FRACTIONS ± 1/64 ANGLES ± 0°30'
FINAL SURFACE QUALITY ✓
REMOVE BURRS AND BREAK SHARP CORNERS

MATERIAL

FINISH

		DATE
DRN.	Ogren	11-4-66
CHKD.		
ENG.		
PROJ. ENG.		
PROD.		

FIRST USED ON

SCALE

SHEET OF

digital EQUIPMENT CORPORATION
MAYNARD, MASSACHUSETTS

TITLE
FIXED POINT DIVIDE & DIVIDE SUBROUTINE

SIZE	CODE	NUMBER	REV.
D	FD	DIVF	PØ4

DIST.

DEC FORM NO.

This drawing and specifications, herein, are the property of Digital Equipment Corporation and shall not be reproduced or copied or used in whole or in part as the basis for the manufacture or sale of items without written permission.

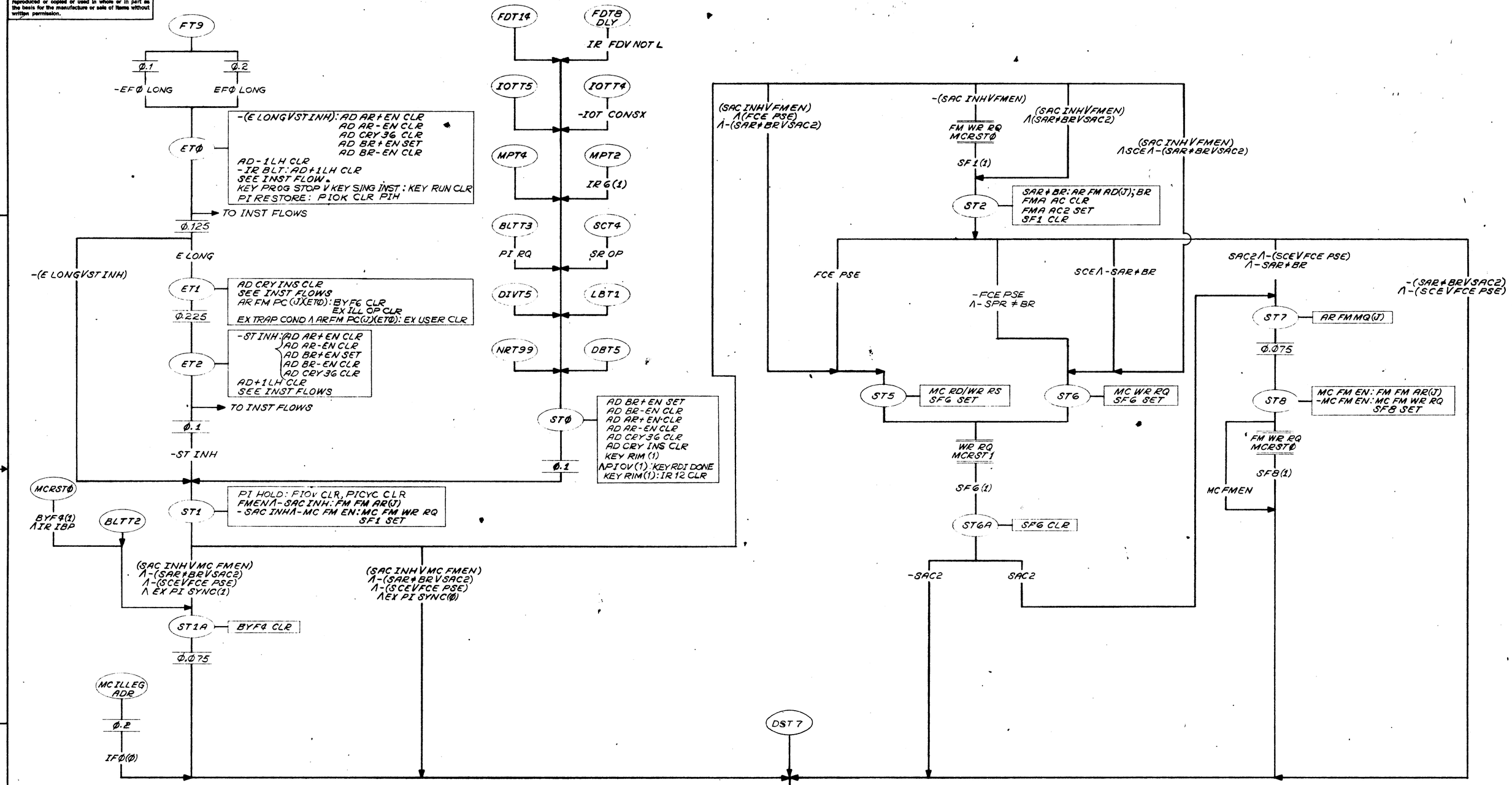

EX TRAP COND = EX ILL OP(1) V EX PI SYNC(1)

REVISIONS			
CHK	CHANGE NO.		REV.
	REDRAWN	11-18-66	PØ1
	REVISED	2/28/67	PØ2
	REVISED	9/5/67	PØ3
	REVISED	9/5/67	PØ4

QTY.	DESCRIPTION	PART NO.	ITEM NO.
	PARTS LIST		

UNLESS OTHERWISE SPECIFIED
UNLESS OTHERWISE SPECIFIED
DIMENSION IN INCHES
TOLERANCES
DECIMALS ± .005 FRACTIONS ± 1/64 ANGLES ± 0°30'
FINAL SURFACE QUALITY √
REMOVE BURRS AND BREAK SHARP CORNERS

MATERIAL

FINISH

DRN.		DATE 11-15-66
CHKD.		DATE
ENG.		DATE
PROJ. ENG.		DATE
PROD.		DATE
FIRST USED ON		
SCALE		
SHEET	OF	

digital EQUIPMENT CORPORATION
MAYNARD, MASSACHUSETTS

TITLE
EXECUTE AND STORE CYCLES

SIZE	CODE	NUMBER	REV.
D	FD	ESC	PØ4

DIST.

This drawing and specifications, herein, are the property of Digital Equipment Corporation and shall not be reproduced or copied or used in whole or in part as the basis for the manufacture or sale of items without written permission.

INSTRUCTION	FAD	FSB	UFA
INITIAL SWITCHES	IR FP-IMM : FCE ST INH	EFØ LONG IR FP-IMM : FCE ST INH	FCE ST INH
INITIAL REGISTERS	AR; C(AC) BR; C(E)/E,Ø SC; Ø MQ; Ø	AR; C(AC) BR; C(E)/E,Ø SC; Ø MQ; Ø	AR; C(AC) BR; C(E) SC; Ø MQ; Ø
FT9		AD MINUS BR	
ETØ		AR FM AD(J) BR FM AR(J)	FMA AC2 SET FMA AC CLR

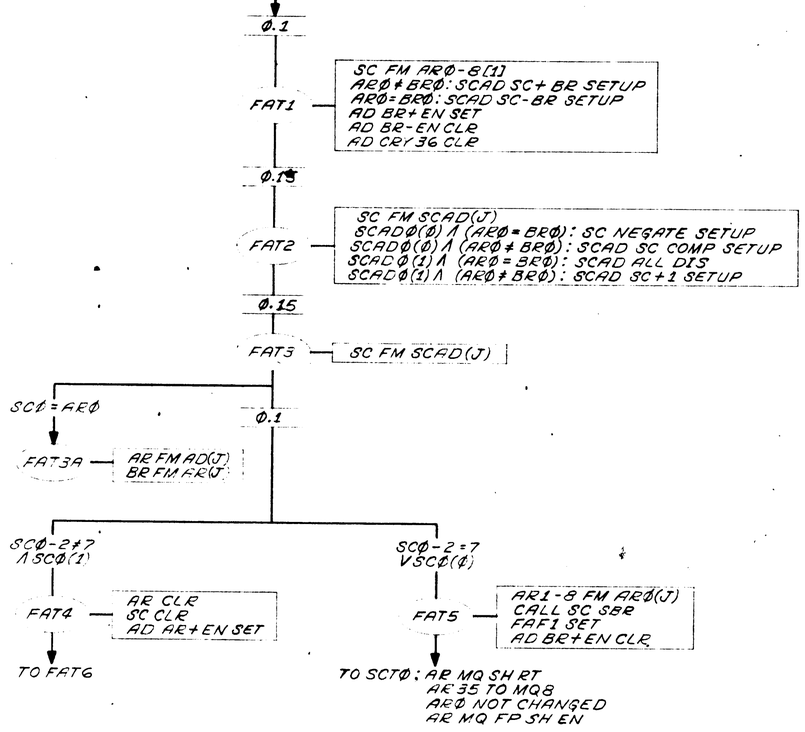

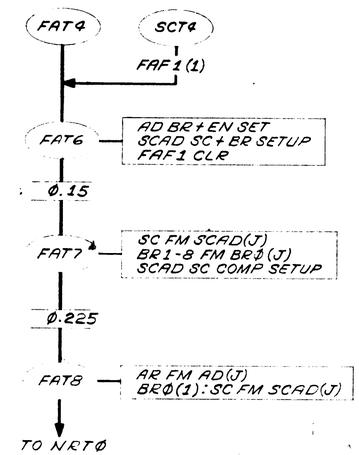

FAD, FSB

	-LONG	LONG
FINAL SWITCHES	XXX M/B: SCE XXXM: SAC INH	• SAC2

REVISIONS		
CHK	CHANGE NO.	REV.
	REDRAWN 11/1/65	PØ1
	REVISED 2/28/67	PØ2
	REVISED 4/5/67	PØ3

QTY.	DESCRIPTION	PART NO.	ITEM NO.
	PARTS LIST		

UNLESS OTHERWISE SPECIFIED

UNLESS OTHERWISE SPECIFIED
DIMENSION IN INCHES
TOLERANCES
DECIMALS ± .005 FRACTIONS ± 1/64 ANGLES ± 0°30'
FINAL SURFACE QUALITY ✓
REMOVE BURRS AND BREAK SHARP CORNERS

MATERIAL

FINISH

DRN. DATE 11/1/66
CHKD. DATE
ENG. DATE
PROJ. ENG. DATE
PROD. DATE
FIRST USED ON
SCALE
SHEET OF

digital EQUIPMENT CORPORATION
MAYNARD, MASSACHUSETTS

TITLE
FLOATING ADD, SUB, & UFA FLOW

SIZE D CODE FD NUMBER FAF REV. PØ3
DIST.

DEC FORM NO.

This drawing and specifications, herein, are the property of Digital Equipment Corporation and shall not be reproduced or copied or used in whole or in part as the basis for the manufacture or sale of items without written permission.

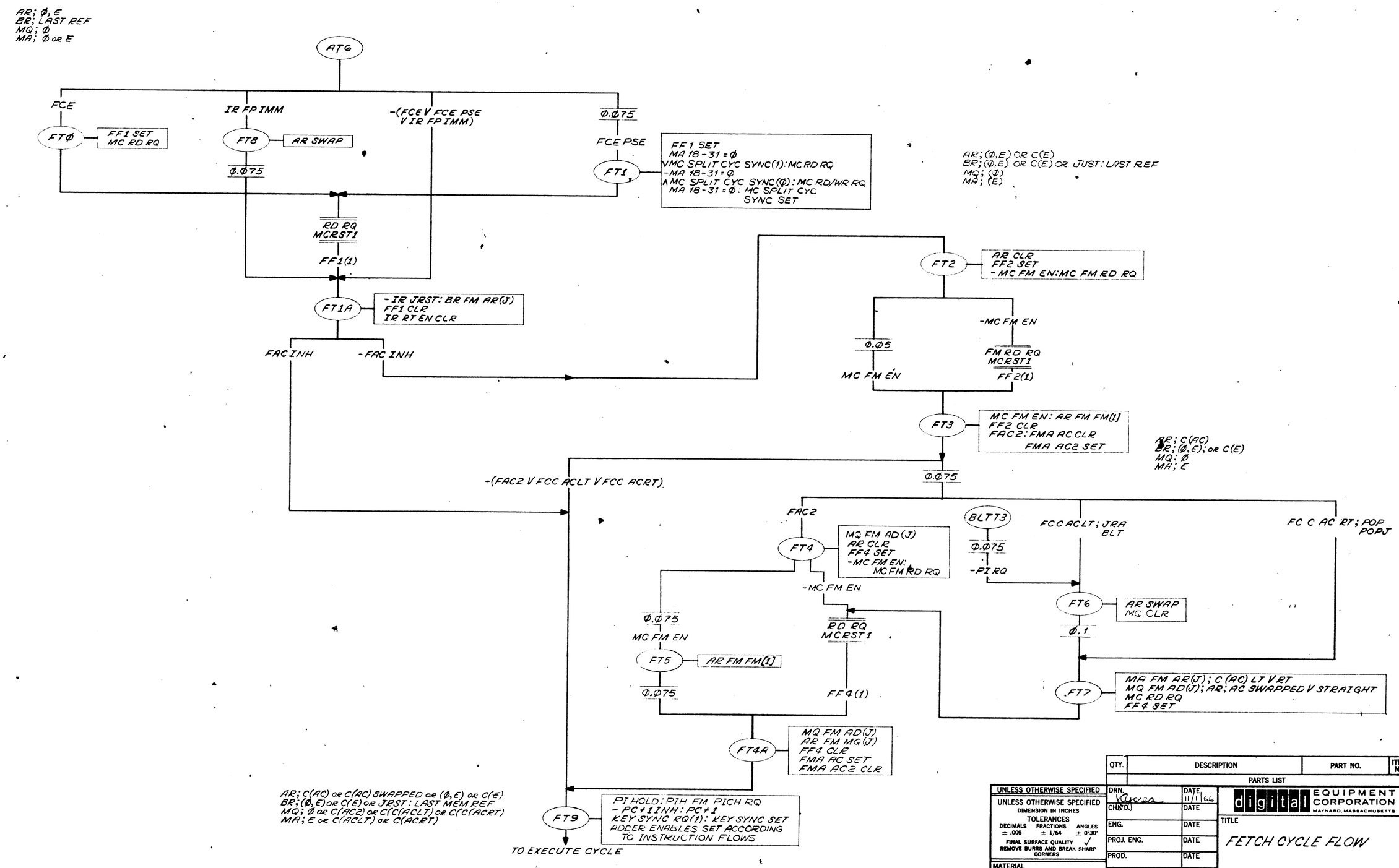

REVISIONS			
CHK	CHANGE NO.		REV.
	REDRAWN 11-1-66		PØ2
	REVISED 2/28/67		PØ3
	REVISED 4/5/67		PØ4

QTY.	DESCRIPTION	PART NO.	ITEM NO.
	PARTS LIST		

UNLESS OTHERWISE SPECIFIED
UNLESS OTHERWISE SPECIFIED
DIMENSION IN INCHES
TOLERANCES
DECIMALS ± .005 FRACTIONS ± 1/64 ANGLES ± 0°30'
FINAL SURFACE QUALITY ✓
REMOVE BURRS AND BREAK SHARP CORNERS

MATERIAL

FINISH

		DATE
DRN.	Kurera	11/1/66
CHK'D.		DATE
ENG.		DATE
PROJ. ENG.		DATE
PROD.		DATE

FIRST USED ON

SCALE

SHEET OF

digital EQUIPMENT CORPORATION
MAYNARD, MASSACHUSETTS

TITLE
FETCH CYCLE FLOW

SIZE	CODE	NUMBER	REV.
D	FD	FC	PØ4

DIST.

DEC FORM NO.

This drawing and specifications, herein, are the property of Digital Equipment Corporation and shall not be reproduced or copied or used in whole or in part as the basis for the manufacture or sale of items without written permission.

INSTRUCTION	FDV	FDVL
INITIAL SWITCHES	FDVL:FAC2 IR EP-IMM:FCE ST INH	
INITIAL REGISTERS	AR;AC;DIVIDEND BR;C(E) OR E;Ø;DIVISOR SC;Ø MQ;Ø OR C(AC2) FE:Ø	
FT9	AD AR NEGATE	AD AR-EN SET
ETØ	ARØB(1):AR FM AD(J) DSF7 SET	

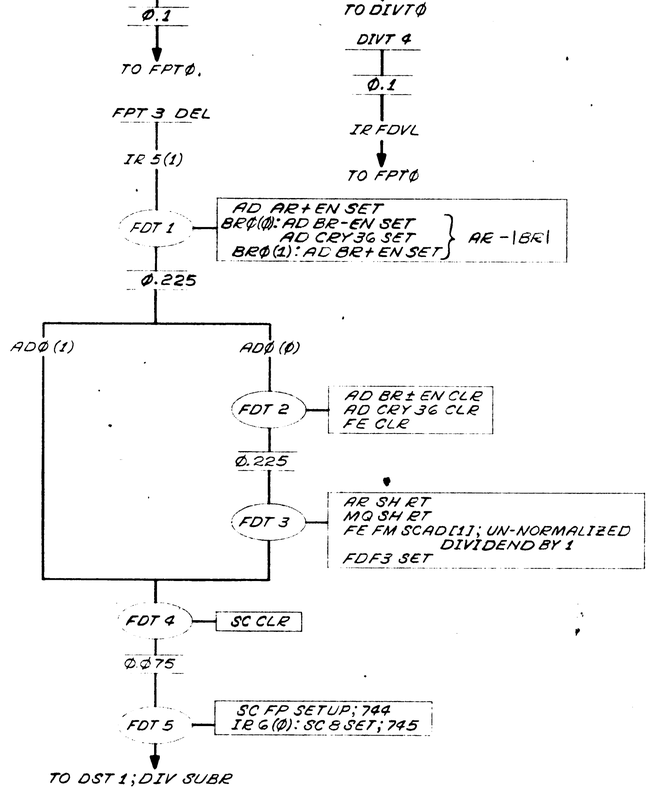

FINAL SWITCHES	XXX M/B:SCE XXX M:SAC INH	SAC 2

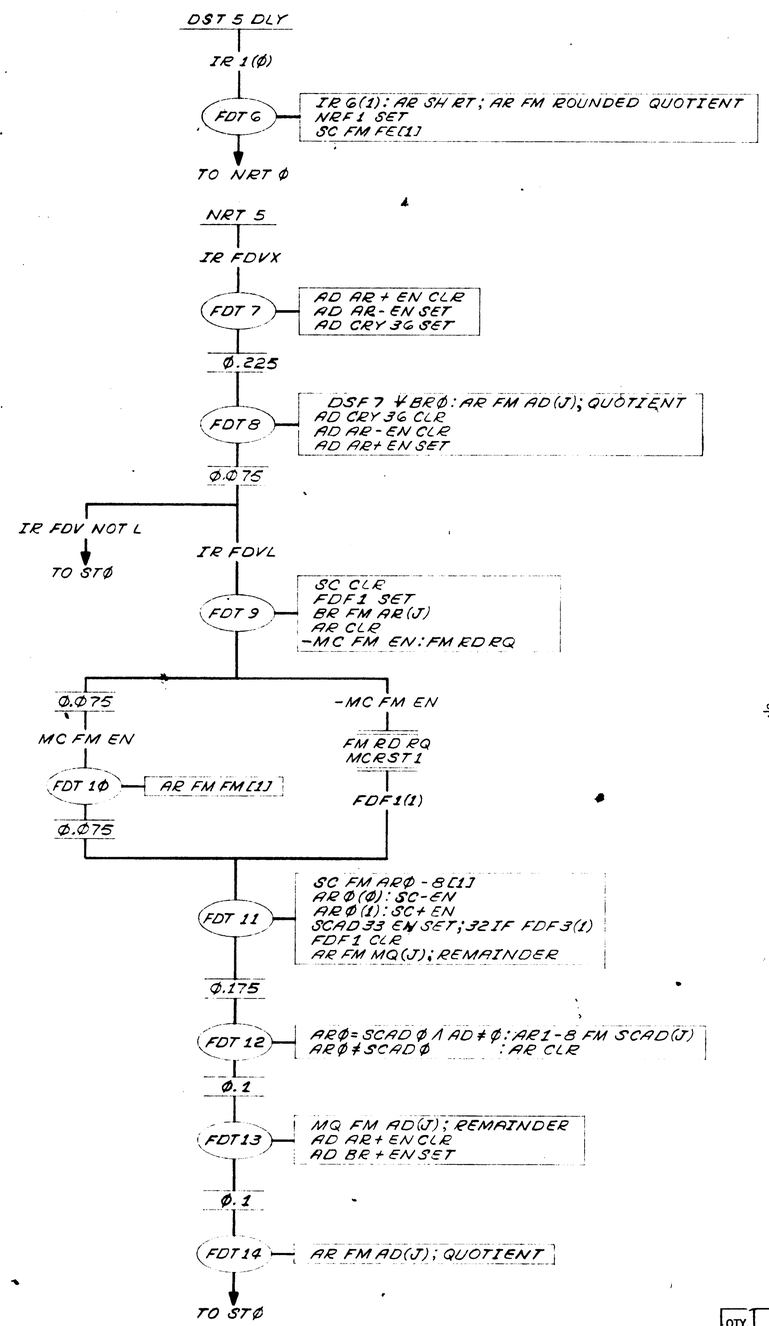

SUMMARY

BR; QUOTIENT W/ EXPONENT
MQ; REMAINDER W/O EXPONENT
AR; DIVIDED W/ EXPONENT
SC; EXPONENT OF DIVIDEND

REVISIONS			
CHK	CHANGE NO.		REV.
	REDRAWN 10/29/66		PØ1
	REVISED 2/28/67		PØ2
	REVISED 4/5/67		PØ3

QTY.	DESCRIPTION	PART NO.	ITEM NO.

PARTS LIST

UNLESS OTHERWISE SPECIFIED

UNLESS OTHERWISE SPECIFIED
DIMENSION IN INCHES
TOLERANCES
DECIMALS ± .005 FRACTIONS ± 1/64 ANGLES ± 0°30'
FINAL SURFACE QUALITY ✓
REMOVE BURRS AND BREAK SHARP CORNERS

MATERIAL

FINISH

DRN.		DATE 10-29-66
CHK'D.		DATE
ENG.		DATE
PROJ. ENG.		DATE
PROD.		DATE
FIRST USED ON		
SCALE		
SHEET	OF	

digital EQUIPMENT CORPORATION
MAYNARD, MASSACHUSETTS

TITLE

FLOATING DIVIDE

SIZE	CODE	NUMBER	REV.
D	FD	FDVF	PØ3

DIST.

This drawing and specifications, herein, are the property of Digital Equipment Corporation and shall not be reproduced or copied or used in whole or in part as the basis for the manufacture or sale of items without written permission.

INSTRUCTION	FMP
INITIAL SWITCHES	-FP IMM: FCE ST INH
INITIAL REGISTERS	AR; C(AC) BR; C(E) OR (E,Ø) SC; Ø
FT9	
ETØ	

FPTØ

FINAL SWITCHES:	XXXM : SAC INH XXXM : SCE XXXL : SAC 2 XXXB : SCE

F.P. EXPONENT CALCULATE

ETØ → Ø.1 → IR FDV NOT L

DIVT4 → Ø.1 → IR FDVL

ETØ → FMP

FPTØ — SC FM ARØ-8[1]
ARØ(1): SCAD SC COMP SETUP.

Ø.1

FPT1 — SC FM SCAD(J)
SCAD BR EN SET
-FP EXP ADD: SCAD DATA 1 EN
FP EXP ADD: SCAD DATA Ø EN
IR5(1): SCAD+1 EN SET

Ø.175

FPT2 — SC FM SCAD(J)
SCAD BR EN CLR
IR5(Ø): SC-EN
IR5(1): SC+EN
SCAD 2ØØ EN SET

Ø.175

FPT3 — BR1-8 FM BRØ(J)
AR1-8 FM ARØ(J)
SCAD SC+1 SETUP
FE FM SCAD[1]
IR5(Ø): SC CLR
IR5(1): SC FM SCAD(J)
AD AR-EN CLR
AD CRY 36 CLR

Ø.ØØ75

IR 5(Ø) → TO FMT 1

IR 5(1) → TO FDT 1

NOTE : FP EXP ADD = IR5 ∀ BRØ

FLT MPY

FROM FPT3 DEL IR5(Ø)

FMT1 — SC FP SETUP; 745
AD BR+EN SET

FROM ETØ ∧ IR XMUL → Ø.1

MSTØ — MQ FM AD(J)
BR FM AR(J)
ARØ(1) ∧ BRØ(1): MPF 2 SET

Ø.Ø75

MST 1 — MSF1 SET: AR MQ SH RT AT SCT3, IF MQ35(1) ∧ MQ34(Ø): AD MD+
IF MQ35(Ø) ∧ MQ34(1): AD MD-
AD BR+EN CLR
MQ35(1): AD BR-EN SET
AD CRY 36 SET
MQ35(Ø): AD BR-EN CLR
AD CRY 36 CLR
TO SC SUBR
AR CLR

TO SCTØ

SCT4 — MSF1 CLR

Ø.125

MPF1(1) → TO MPT 2

IR FMP

FMT3 — AR FM AD(J)
SC FM FE[1]
MQ35 CLR

TO NRETØ

REVISIONS		
CHK	CHANGE NO.	REV.
	REDRAWN 11/1/66	PØ2
	REVISED 2/28/67	PØ3
	REVISED 4/5/67	PØ4

QTY.	#	DESCRIPTION	PART NO.	ITEM NO.

PARTS LIST

UNLESS OTHERWISE SPECIFIED
UNLESS OTHERWISE SPECIFIED
DIMENSION IN INCHES
TOLERANCES
DECIMALS ± .005 FRACTIONS ± 1/64 ANGLES ± 0°30'
FINAL SURFACE QUALITY ✓
REMOVE BURRS AND BREAK SHARP CORNERS

MATERIAL

FINISH

DRN.		DATE 11/1/66
CHK'D.		DATE
ENG.		DATE
PROJ. ENG.		DATE
PROD.		DATE
FIRST USED ON		
SCALE		
SHEET	OF	

digital EQUIPMENT CORPORATION
MAYNARD, MASSACHUSETTS

TITLE
FP EXP CALCULATE SUBR
FM & MPY SUBR

SIZE	CODE	NUMBER	REV.
D	FD	FPMC	PØ4

DIST.

This drawing and specifications, herein, are the property of Digital Equipment Corporation and shall not be reproduced or copied or used in whole or in part as the basis for the manufacture or sale of items without written permission.

INSTRUCTION	FSC FLOATING SCALE (132)	DFN DOUBLE FLOATING NEGATE (131)
INITIAL SWITCHES	ST INH E LONG	E LONG FCE PSE EFØ LONG
INITIAL REGISTERS	BR; Ø. E AR: C(AC) SC; Ø	BR; C(E) AR; C(AC) SC; Ø
FT9		AD MINUS BR SCAD SC+BR SETUP
ETØ	SC FM BR(1); E ARØ(Ø): SCAD SC+BR SETUP ARØ(1): SCAD SC-BR SETUP	SC FM SCAD(J) BR FM AR(J) AR FM AD(J) AD 9-35 ≠ Ø: AD CRY 36 CLR SCAD FDL DIS
ET1	AR1-8 FM ARØ(J)	ARØ-8 FM SCAD(J)
ET2	SC FM SCAD(J)	BR FM AR(J) AR FM AD(J)

TO NRTØ

FINAL SWITCHES		SAR ≠ BR

REVISIONS		
CHK	CHANGE NO.	REV.
	REDRAWN 11/1/66	PØ1
	REVISED 2/28/67	PØ2

QTY.	DESCRIPTION	PART NO.	ITEM NO.
	PARTS LIST		

UNLESS OTHERWISE SPECIFIED
UNLESS OTHERWISE SPECIFIED
DIMENSION IN INCHES
TOLERANCES
DECIMALS ± .005 FRACTIONS ± 1/64 ANGLES ± 0°30'
FINAL SURFACE QUALITY ✓
REMOVE BURRS AND BREAK SHARP CORNERS
MATERIAL
FINISH

DRN. DATE 11/1/66
CHK'D. DATE
ENG. DATE
PROJ. ENG. DATE
PROD. DATE
FIRST USED ON
SCALE
SHEET OF

digital EQUIPMENT CORPORATION
MAYNARD, MASSACHUSETTS

TITLE
FLOATING SCALE & DOUBLE FLOATING NEGATE

SIZE	CODE	NUMBER	REV.
D	FD	FSDN	PØ2

DIST.

This drawing and specifications, herein, are the property of Digital Equipment Corporation and shall not be reproduced or copied or used in whole or in part as the basis for the manufacture or sale of items without written permission.

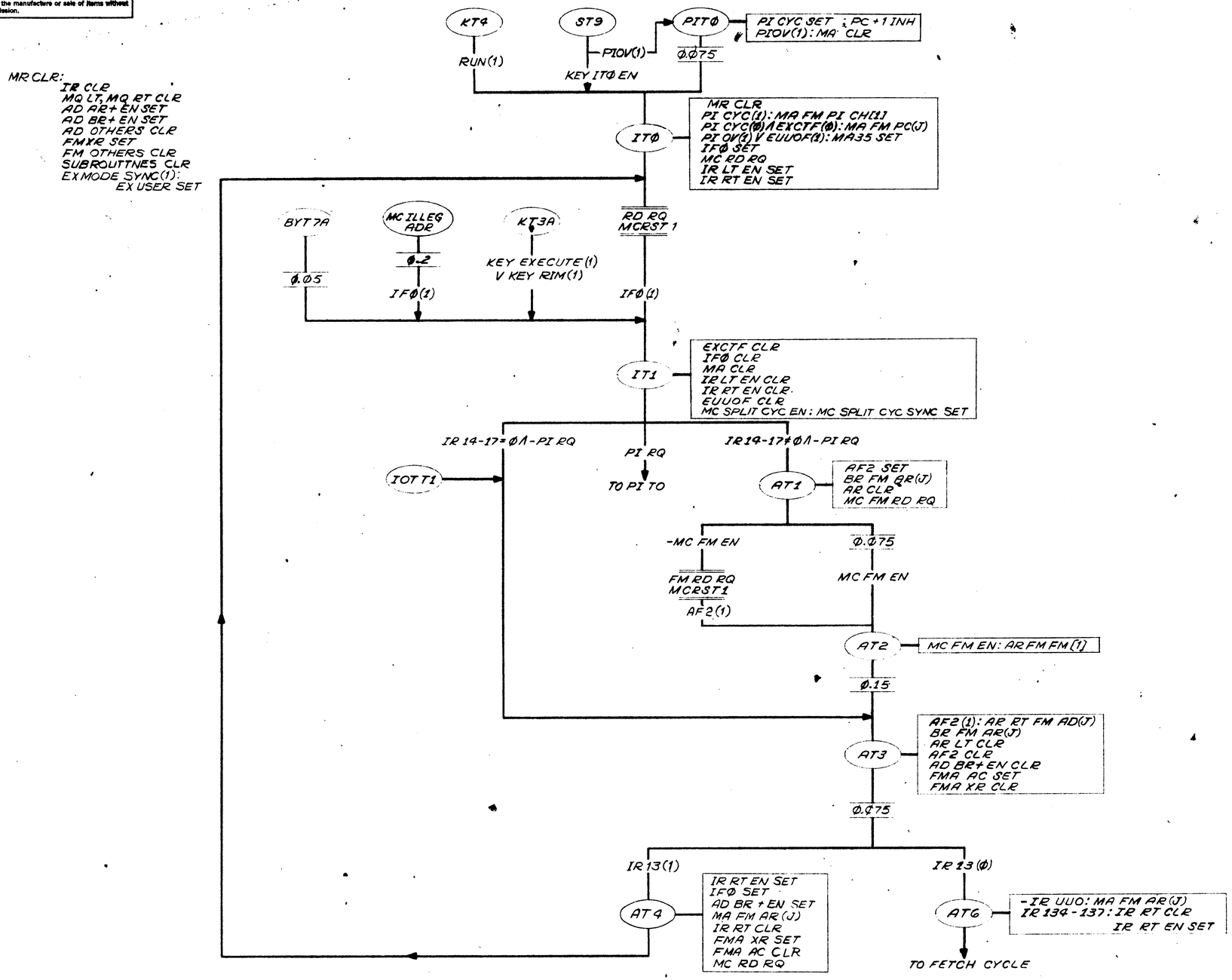

AR; Ø, E
BR; LAST REF
MQ; Ø
MA; Ø or E

REVISIONS		
CHK	CHANGE NO.	REV.
	REDRAWN 11-9-66	P02
	REVISED 3/1/67	P03
	REVISED 3/23/67	P04
	REVISED 3/31/67	P05
	REVISED 4/15/67	P06
	REVISED 4/18/67	P07

QTY.	DESCRIPTION	PART NO.	ITEM NO.
	PARTS LIST		

UNLESS OTHERWISE SPECIFIED
UNLESS OTHERWISE SPECIFIED
DIMENSION IN INCHES
TOLERANCES
DECIMALS ± .006 FRACTIONS ± 1/64 ANGLES ± 0°30'
FINAL SURFACE QUALITY ✓
REMOVE BURRS AND BREAK SHARP CORNERS

MATERIAL

FINISH

DRN.	DATE 11-9-66	
CHK'D.	DATE	
ENG.	DATE	
PROJ. ENG.	DATE	
PROD.	DATE	
FIRST USED ON		
SCALE		
SHEET OF		

digital EQUIPMENT CORPORATION
MAYNARD, MASSACHUSETTS

TITLE
INSTRUCTION AND ADDRESS CYCLES

SIZE	CODE	NUMBER	REV.
D	FD	IAC	P07

DIST.

This drawing and specifications, herein, are the property of Digital Equipment Corporation and shall not be reproduced or copied or used in whole or in part as the basis for the manufacture or sale of items without written permission.

INSTRUCTION	BLKO/BLKI	CONO	CONI	CONSX	DATAO	DATAI
INITIAL SWITCHES	FAC INH FCE PSE EFØ LONG PC+1 INH ST INH	FAC INH ST INH	FAC INH ST INH	FAC INH ST INH	FAC INH FCE ST INH	FAC INH ST INH
INITIAL REGISTERS	AR; C(E); OLD POINTER	AR; Ø, E BR; Ø, E	BR; Ø, E	BR; Ø, E	AR; C(E)	
FINAL SWITCHES	SAC INH	SAC INH	SAC INH SCE	SAC INH	SAC INH	SAC INH SCE
FT9	AD+1 BOTH					
ETØ	AR FM AD(J); NEW POINTER AD CRY Ø(Ø) ∧ PI CYC (Ø): PC+1 AD CRY Ø(1) ∧ PI OV EN: PI OV SET IOT F1 SET MC RD/WR RS IR 12 SET EX ILL OP CLR	ARLT FM ARRT(J) IOT GO SET	AR CLR IOT GO SET	AR CLR IOT GO SET	IOT GO SET	AR CLR IOT GO SET

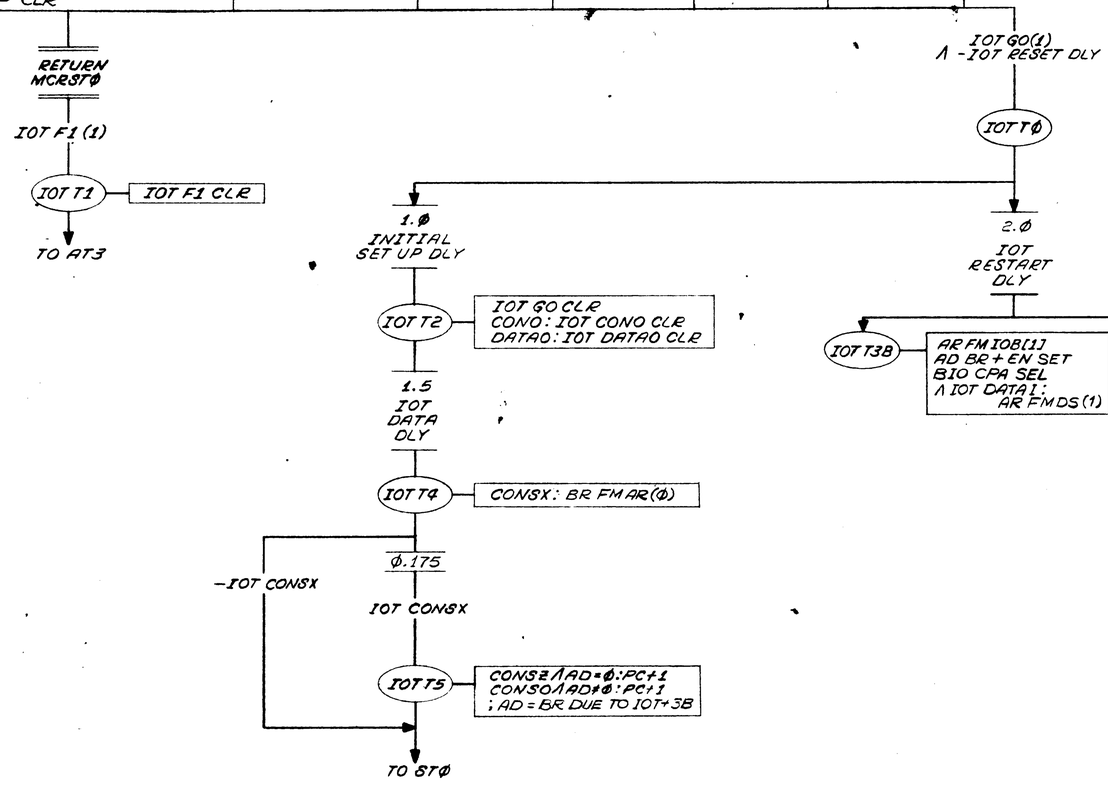

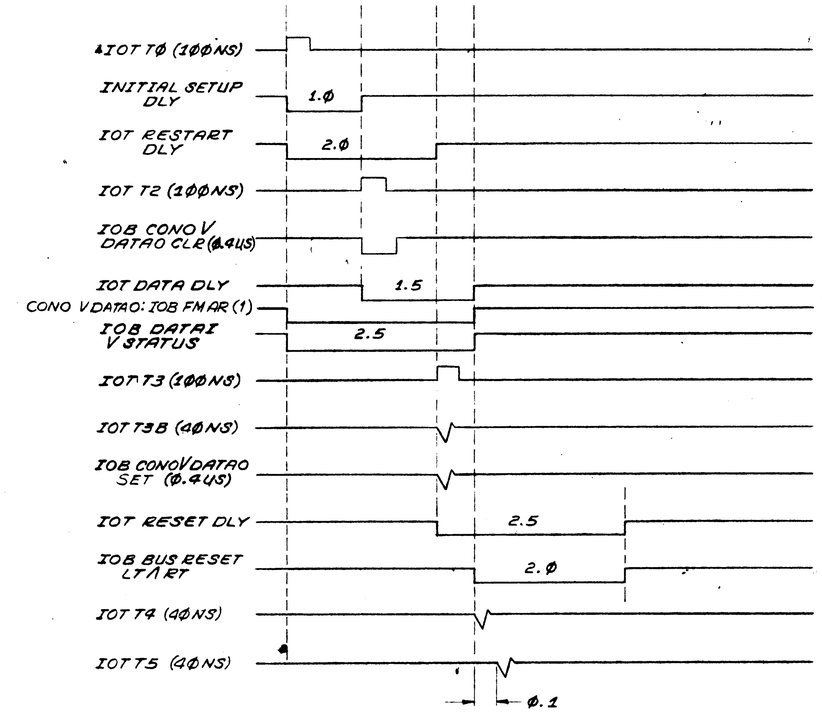

IOB DATAI = IOT DATAI ∧ (IOT RESTART DLY V IOT DATA DLY)
IOB STATUS = (IOT CONI V IOT CONSX) ∧ (IOT RESTART DLY V IOT DATA DLY)
IOT RESET = MR START V (CPA CONO SET ∧ IOB19)

REVISIONS		
CHK	CHANGE NO.	REV.
	REDRAWN 10/21	PØ2
	REVISED 3/1/67	PØ3
	REVISED 9/5/67	PØ4

QTY.	DESCRIPTION	PART NO.	ITEM NO.
	PARTS LIST		

UNLESS OTHERWISE SPECIFIED
UNLESS OTHERWISE SPECIFIED
DIMENSION IN INCHES
TOLERANCES
DECIMALS ± .005 FRACTIONS ± 1/64 ANGLES ± 0°30'
FINAL SURFACE QUALITY ✓
REMOVE BURRS AND BREAK SHARP CORNERS

MATERIAL

FINISH

DRN.		DATE 10/21/66
CHK'D		DATE
ENG.		DATE
PROJ. ENG.		DATE
PROD.		DATE
FIRST USED ON		
SCALE		
SHEET	OF	

digital EQUIPMENT CORPORATION
MAYNARD, MASSACHUSETTS

TITLE
IN-OUT TRANSFER
CONTROL FLOW

SIZE	CODE	NUMBER	REV.
D	FD	IOTF	PØ4

DIST.

This drawing and specifications, herein, are the property of Digital Equipment Corporation and shall not be reproduced or copied or used in whole or in part as the basis for the manufacture or sale of items without written permission.

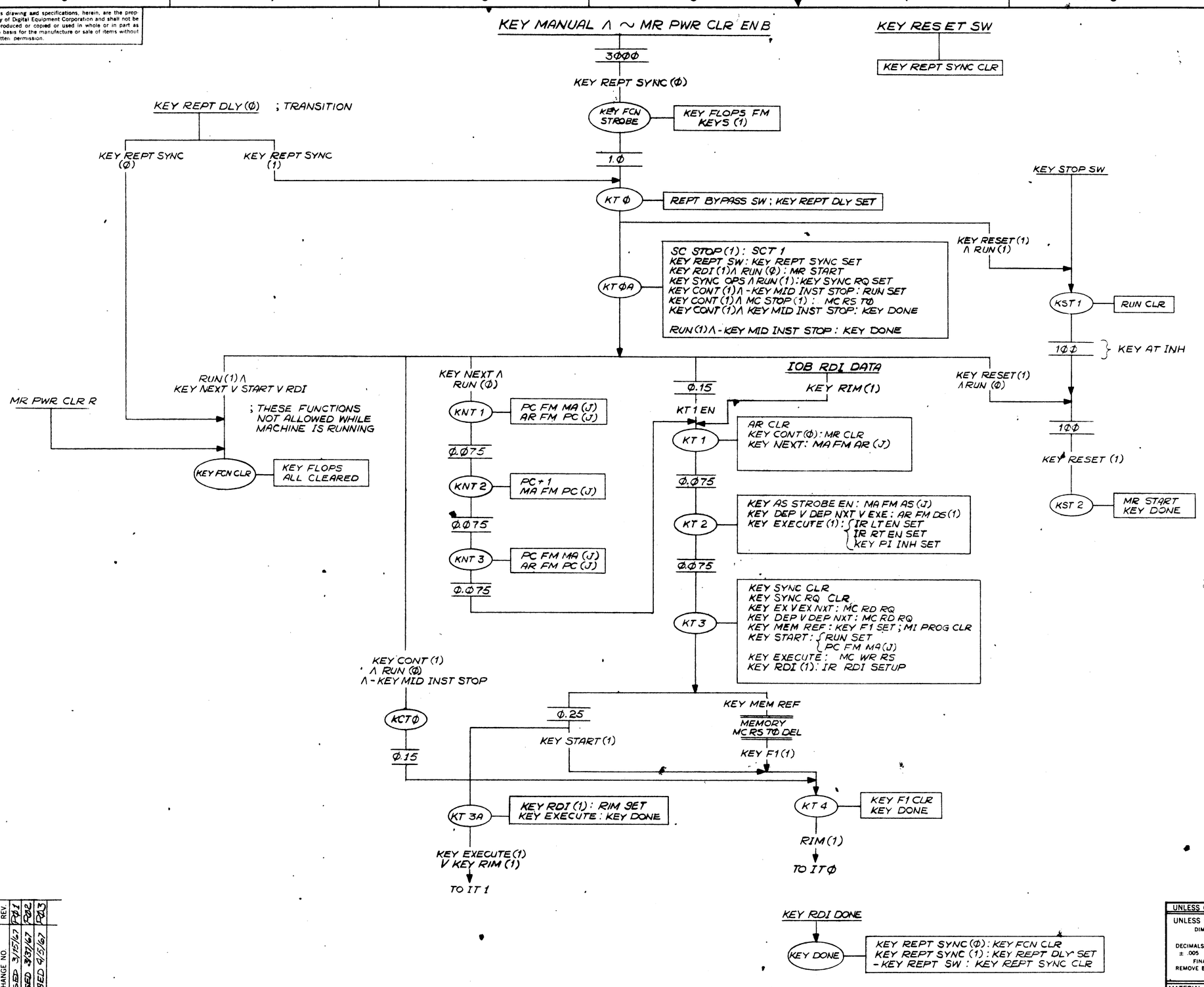

NOTES:

KEY LEVELS

KEY MANUAL = KEY RDI SW V STA SW V CONT SW V RESET SW V EX SW V SW V EXA SW V DEP SW V EX NXT SW V DP NXT SW

KEY SYNC OPS = KEY EXAMINE (1) V KEY DEPOSIT (1) V KEY EXECUTE (1)

KT 1 EN = RUN (Ø) ∧ (KEY START (1) V KEY EXAMINE (1) V KEY DEPOSIT (1) V KEY EXECUTE (1))

KEY NEXT = KEY EX NXT (1) V KEY DEP NXT (1)

KEY MEM REF = KEY EXAMINE (1) V KEY DEPOSIT (1) V KEY EX NXT (1) V KEY DEP NXT (1)

KEY AS STROBE EN = KEY EXAMINE (1) V KEY DEPOSIT (1) V KEY START (1)

KEY ITØ EN = (E XCTF (1) V KEY SYNC (Ø)) ∧ RUN (1)

REVISIONS			
CHANGE NO.	REVISED 3/15/67	REVISED 3/31/67	REVISED 4/15/67
REV.	RØ1	RØ2	RØ3
CHK			

QTY.	DESCRIPTION	PART NO.	ITEM NO.
	PARTS LIST		

UNLESS OTHERWISE SPECIFIED
DIMENSION IN INCHES
TOLERANCES
DECIMALS ± .005 FRACTIONS ± 1/64 ANGLES ± 0°30'
FINAL SURFACE QUALITY
REMOVE BURRS AND BREAK SHARP CORNERS

MATERIAL

FINISH

DRN. N. Stephenson DATE 3-1-67
CHK'D. DATE
ENG. DATE
PROJ. ENG. DATE
PROD. DATE
FIRST USED ON
SCALE
SHEET OF

digital EQUIPMENT CORPORATION MAYNARD MASSACHUSETTS

TITLE KEY OPERATIONS FLOW DIAGRAM

SIZE D CODE FD NUMBER KA1Ø-Ø-KO REV. RØ3

DIST.

DEC FORM NO.

specifications, herein, are the property of Digital Equipment Corporation and shall not be copied or used in whole or in part as for the manufacture or sale of items without permission.

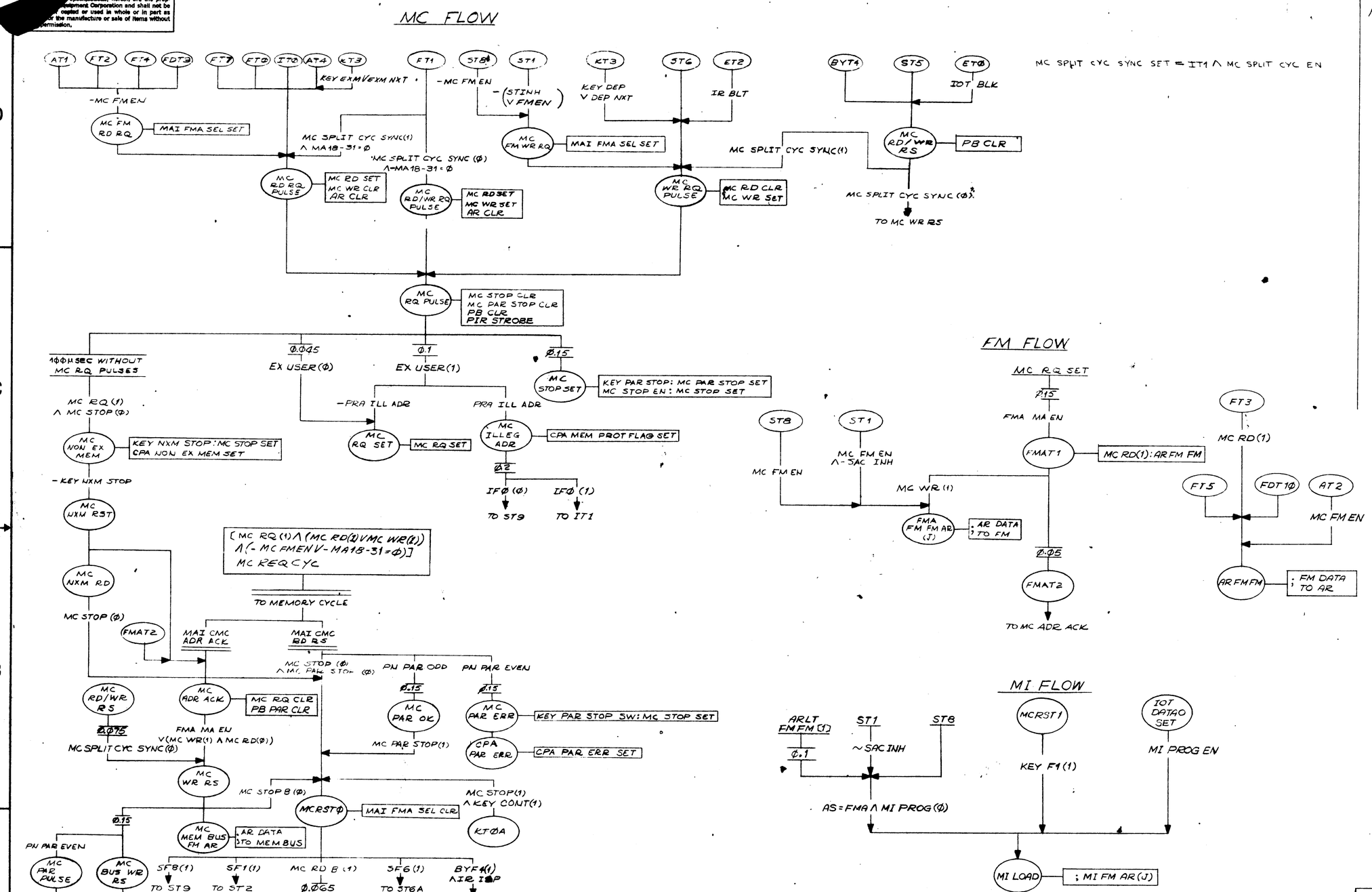

NOTES:

1. MC FLOW

KEY SING CYCLE
V (AS = RLA ∧ KEY ADR STOP ∧ MC SW COND) : MC STOP EN

SW FM ENABLE
∧ KEY RIM (Ø) : MC FM EN

KEY ADR STOP
V KEY SING CYC
V IOB DR SPLIT
V -MC FM EN : MC SPLIT CYC EN

MC RQ (1)
∧ MC SW COND
∧ AS = RLA
∧ KEY ADR BREAK : MC ADR BREAK SET

(KEY ADR INST ∧ IFØ(1))
V (KEY ADR RD ∧ IFØ(Ø) ∧ MC RD B (1))
V (KEY ADR WR ∧ MC RD(Ø) ∧ MC WR (1)) : MC SW COND

MC ADR BREAK SET : CPA ADR BREAK SET

2. FM FLOW

MC RQ(1)
∧ MA 18-31 = Ø
∧ MC FM EN : FMA MA EN

EX REL = EX USER (1)
∧ ~EX TRAP COND
∧ ~MA 18-31 = Ø
∧ MAI FMA SEL (Ø)
∧ KEY F1 (Ø)

REV.	CHANGE NO.	CHK
PØ1	REVISED 3/1/67	
PØ2	REVISED 3/31/67	
PØ3	REVISED 4/5/67	
PØ4	REVISED 4/17/67	
PØ5	REVISED 5/1/67	

REVISIONS

QTY.	DESCRIPTION	PART NO.	ITEM NO.

PARTS LIST

UNLESS OTHERWISE SPECIFIED
DIMENSION IN INCHES
TOLERANCES
DECIMALS ± .005 FRACTIONS ± 1/64 ANGLES ± 0°30'
FINAL SURFACE QUALITY √
REMOVE BURRS AND BREAK SHARP CORNERS

MATERIAL

FINISH

DRN. DATE
CHK'D. DATE
ENG. DATE
PROJ. ENG. DATE
PROD. DATE
FIRST USED ON
SCALE
SHEET OF

digital EQUIPMENT CORPORATION
MAYNARD, MASSACHUSETTS

TITLE MEMORY CONTROL & FAST MEMORY FLOW

SIZE D CODE NUMBER FD-D-KA1Ø-MCFM REV. PØ5

DIST.

DEC FORM NO.

This drawing and specifications, herein, are the property of Digital Equipment Corporation and shall not be reproduced or copied or used in whole or in part as the basis for the manufacture or sale of items without written permission.

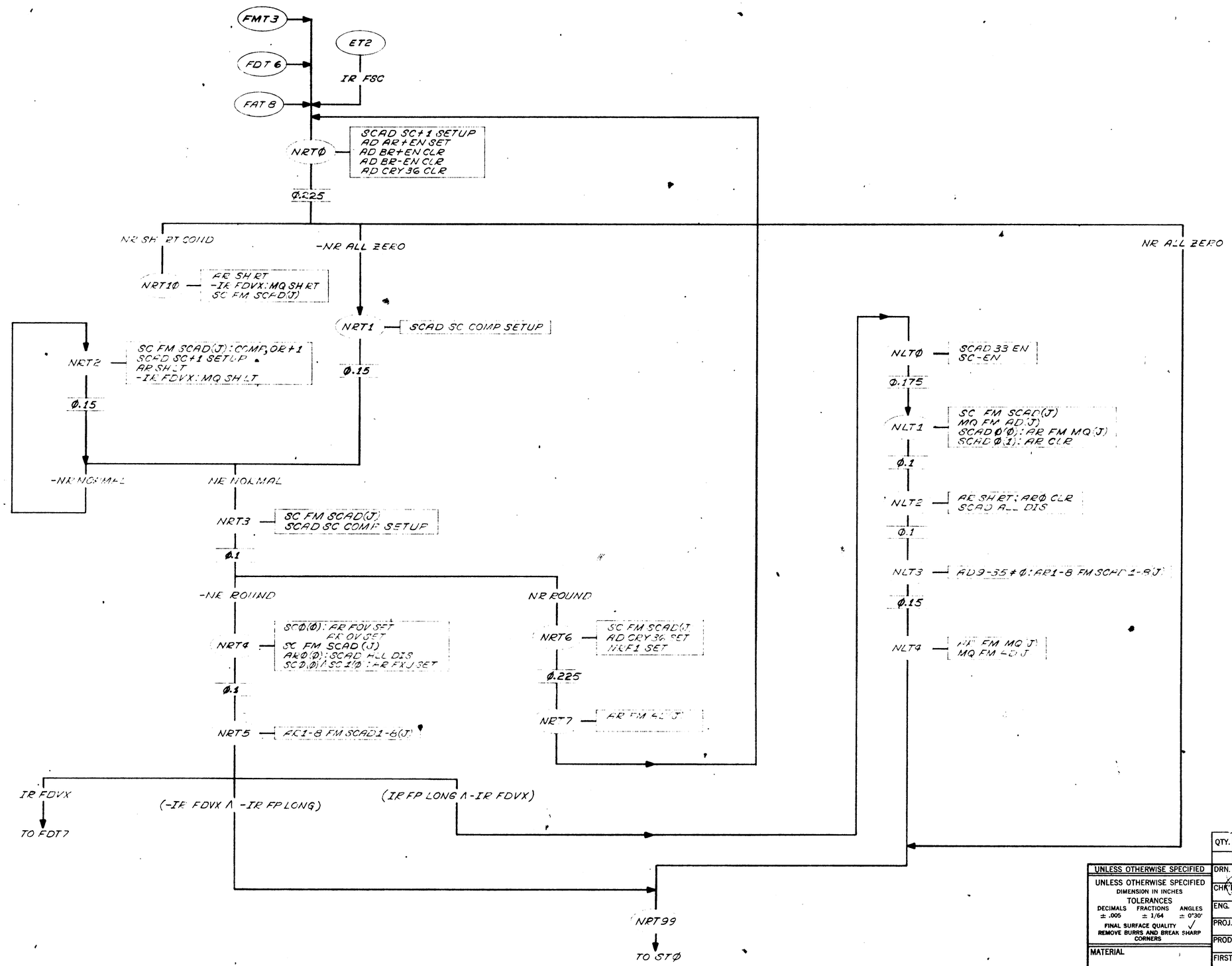

NOTES:

NR SHRT COND = (ARØ ≠ ARB) ∨ (AR9(1) ∧ AD9-35 = Ø)

NR NORMAL = (ARØ ≠ AR9) ∨ (AD9(1) ∧ AD1Ø-35 = Ø) ∨ IR UFA

NR ROUND = NRF1(Ø) ∧ IRG(1) ∧ MQ8(1) ∧ -(MQ9-35 = Ø ∧ ARØ(1))

NR ALL ZERO = AD = Ø ∧ MQ8(Ø) ∧ MQ9-35 = Ø

REVISIONS			
CHK	CHANGE NO.		REV.
	REDRAWN	11-3-66	PØ3
	REVISED	3/1/67	PØ4
	REVISED	3/31/67	PØ4
	REVISED	4/5/67	PØ5

QTY.	DESCRIPTION	PART NO.	ITEM NO.
	PARTS LIST		

UNLESS OTHERWISE SPECIFIED
DIMENSION IN INCHES
TOLERANCES
DECIMALS ± .005 FRACTIONS ± 1/64 ANGLES ± 0°30'
FINAL SURFACE QUALITY ✓
REMOVE BURRS AND BREAK SHARP CORNERS

MATERIAL

FINISH

DRN. DATE 11-3-66
CHK'D. DATE
ENG. DATE
PROJ. ENG. DATE
PROD. DATE
FIRST USED ON
SCALE
SHEET OF

digital EQUIPMENT CORPORATION
MAYNARD, MASSACHUSETTS

TITLE
NORMALIZE RETURN SUBROUTINE

SIZE	CODE	NUMBER	REV.
D	FD	NRF	PØ5

DIST.

This drawing and specifications, herein, are the property of Digital Equipment Corporation and shall not be reproduced or copied or used in whole or in part as the basis for the manufacture or sale of items without written permission

; START: READ-IN KEY PRESSED

KEY RDI SW

KEY MANUAL

3MS

KEY FCN STROBE — KEY RDI FM KEY RDI SW

1.Ø

KTØ — RUN(Ø)∧KEY RDI(1): KEY RDI DLY SET

RUN(1)

KEY FCN CLR

; READ-IN NOT ALLOWED WHILE MACHINE IS RUNNING

KTØA — RUN(Ø)∧KEY RDI(1): MR START; I/O BUS PWR CLR

Ø.15

RUN(Ø)∧KEY RDI(1)

KT1 — MR CLR
AR CLR

Ø.Ø75

KT2

ØØ75

KT3 — KEY RDI(1): IR RDI SETUP
KEY RDI PART 2(Ø): IR SET TO (DATAI DEV, Ø)
KEY RDI PART 2(1): IR SET TO (BLKI DEV, Ø)

Ø.25

KT3A — KEY RDI(1): RIM SET

RIM(1)

TO IT1

IOB RDI DATA ; DEVICE HAS DATA

1.Ø

KEY RDI PART 2 SET

RIM(1)

; 1.5MSEC AFTER KTØ

KEY RDI DLY(Ø)

IOB RDI PULSE — ; SELECTED DEVICE BEGINS READ-IN OPERATION

KT3A

RIM(1)

IT1

MACHINE EXECUTES INSTRUCTION IN IR, WITH ADDRESS OF Ø.

1) FOR FIRST WORDS, THIS IS "DATAI DEV, Ø" WHICH READS A POINTER INTO LOCATION Ø.

2) FOR SUCCEEDING WORD, THIS IS "BLKI DEV, Ø" WHICH READS A WORD OF DATA ACCORDING TO THE POINTER.

ETØ — KEY RIM(1)
∧AD CRY Ø(1)
∧IOT BLK: PI OV SET
; END OF BLOCK OF DATA

ST1 — RIM(1): IR12 CLR; TURN DATAI INTO BLKI

KEY RIM(1)
∧PI OV(1)

KEY RDI DONE — -KEY SING INST: RUN SET
RIM CLR
E XCTF SET
PI OV CLR

ST9

NOTE; MACHINE STOPS UNLESS RUN HAS BEEN SET BY KEY RDI DONE. IF RUN(1), THEN SINCE E XCTF(1), MACHINE WILL EXECUTE C(C(MA)).

DATA FORMAT TO BE READ-IN BY READ-IN FUNCTION

FIRST WORD:

Ø	17 18	35
-N		ADDRESS - 1

SUCCEEDING WORDS:

N WORDS — DATA (A BOOTSTRAP PROG)

THE DATA WILL BE LOADED STARTING AT LOCATION "ADDRESS." THE LAST DATA WORD WILL THEN BE EXECUTED AS IF BY AN XCT INSTRUCTION.

REVISIONS			
CHK	CHANGE NO.	REV	
	REVISED 3/1/67	PØ1	
	REVISED 4/11/67	PØ2	

QTY.	DESCRIPTION	PART NO.	ITEM NO.
	PARTS LIST		

UNLESS OTHERWISE SPECIFIED
DIMENSION IN INCHES
TOLERANCES
DECIMALS ± .005 FRACTIONS ± 1/64 ANGLES ± 0°30'
FINAL SURFACE QUALITY
REMOVE BURRS AND BREAK SHARP CORNERS

MATERIAL

FINISH

DRN.	Joe Cyrea	DATE 2-8-67
CHK'D.		DATE
ENG.		DATE
PROJ. ENG.		DATE
PROD.		DATE

FIRST USED ON

SCALE

SHEET OF

digital EQUIPMENT CORPORATION
MAYNARD MASSACHUSETTS

TITLE
READ-IN FUNCTION
ISOLATED FLOW
DIAGRAM

SIZE	CODE	NUMBER	REV.
D	FD	RIMF	PØ2

DIST.

DEC FORM NO
DRD 102

This drawing and specifications, herein, are the property of Digital Equipment Corporation and shall not be reproduced or copied or used in whole or in part as the basis for the manufacture or sale of items without written permission.

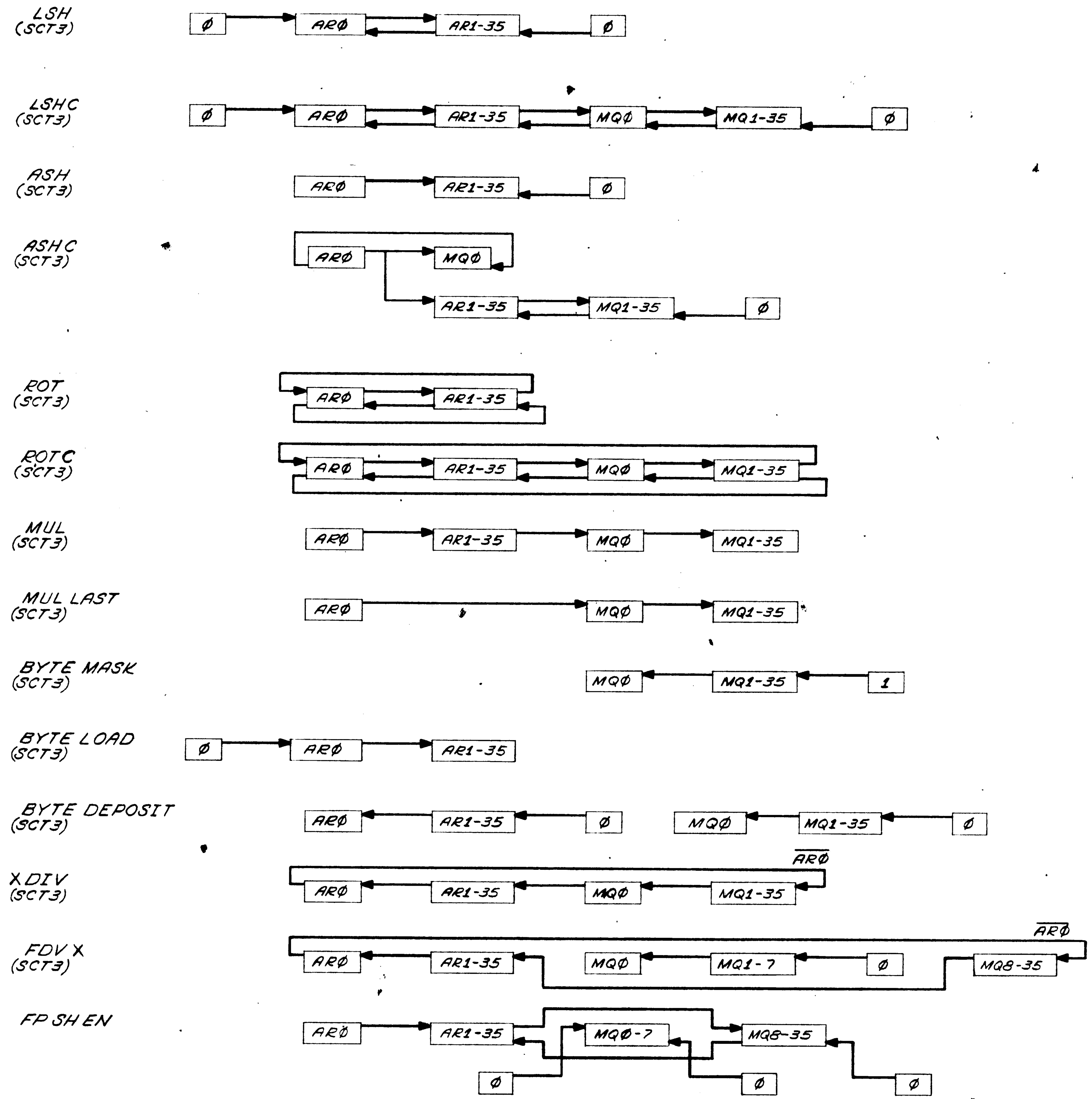

REVISIONS		
CHK	CHANGE NO.	REV.
	REVISED 3/7/67	PØ1

QTY.	DESCRIPTION	PART NO.	ITEM NO.

PARTS LIST

UNLESS OTHERWISE SPECIFIED

UNLESS OTHERWISE SPECIFIED
DIMENSION IN INCHES
TOLERANCES
DECIMALS ± .005 FRACTIONS ± 1/64 ANGLES ± 0°30'
FINAL SURFACE QUALITY √
REMOVE BURRS AND BREAK SHARP CORNERS

MATERIAL

FINISH

DRN. [signature]	DATE 11-4-66	
CHK'D.	DATE	
ENG.	DATE	
PROJ. ENG.	DATE	
PROD.	DATE	
FIRST USED ON		
SCALE		
SHEET	OF	

digital EQUIPMENT CORPORATION
MAYNARD, MASSACHUSETTS

TITLE
SHIFT COUNT ACTION FLOW

SIZE	CODE	NUMBER	REV.
D	FD	SCAF	PØ1

DIST.

DEC FORM NO.

This drawing and specifications, herein, are the property of Digital Equipment Corporation and shall not be reproduced or copied or used in whole or in part as the basis for the manufacture or sale of items without written permission.

INSTRUCTION	BLT
INITIAL SWITCHES	PC+1 INH FC C ACLT ST INH E LONG
INITIAL REGISTERS	AR; TO, FROM BR; Ø, LAST MQ: DATA; C(FROM) MA; FROM PC: ADDRESS (BLT)
FT9	AD AR+EN SET AD+1 BOTH
ETØ	AR SWAP; FROM, TO
ET1	MA FM AR(J); TO
ET2	AR FM MQ(J); DATA MQ FM AD(J); (FROM+1, TO+1) AD+1 LH CLR MC WR RQ BLT F1 SET

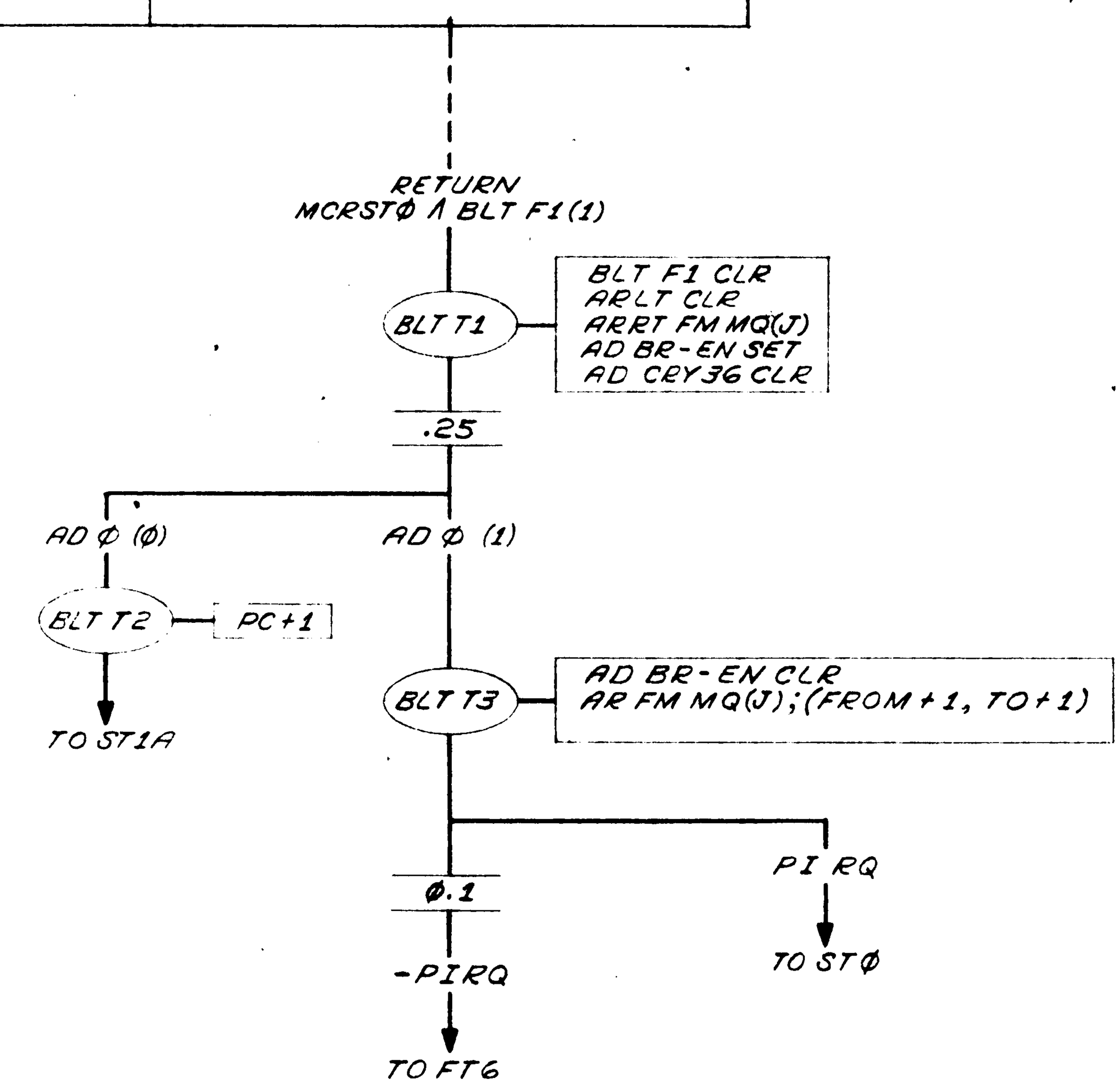

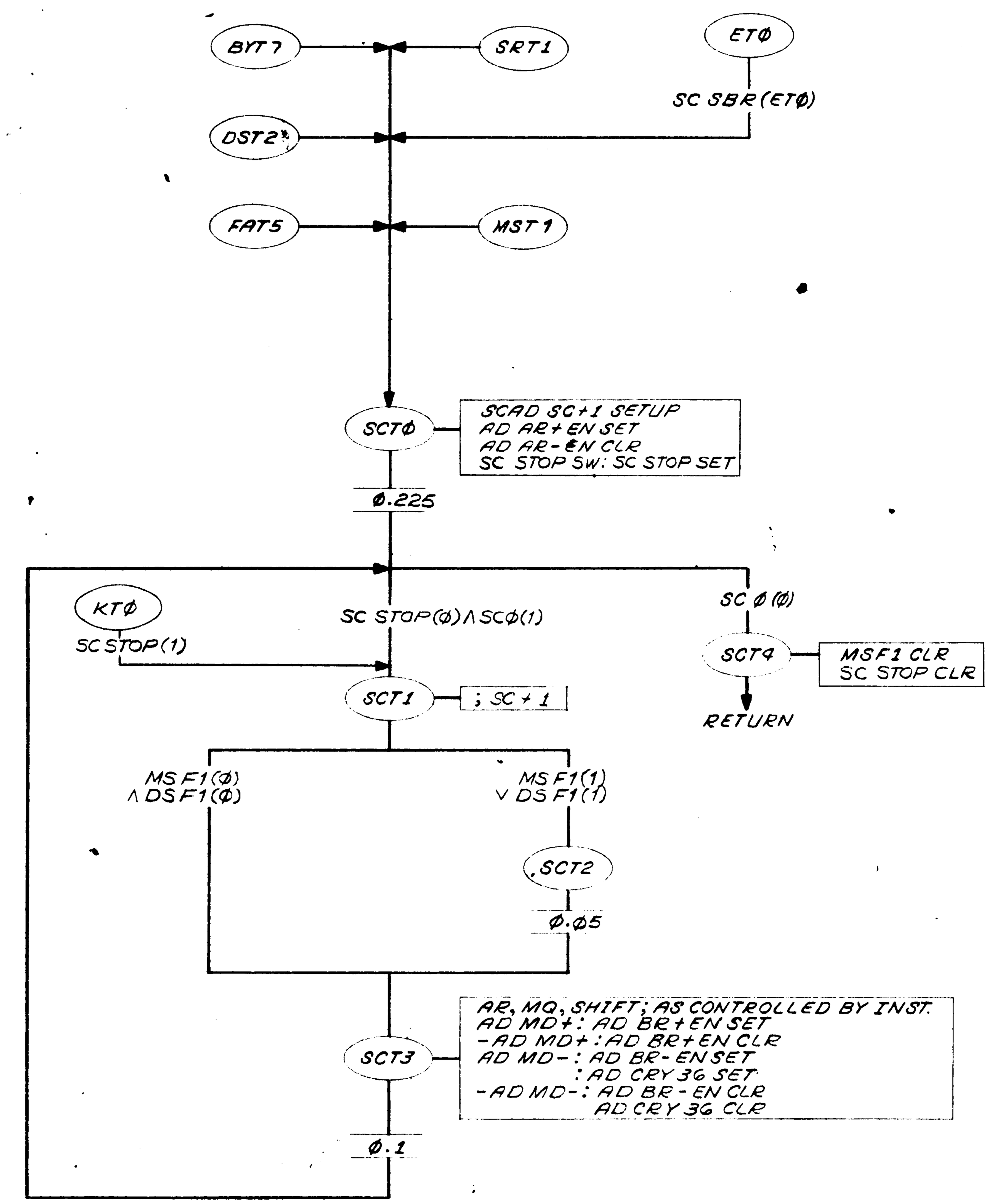

$$AD\ MD+ = (MSF1(1) \wedge MQ34(\emptyset) \wedge MQ35(1)) \vee [DSF1(1) \wedge (AD\emptyset(1) \wedge BR\emptyset(\emptyset)) \vee (AD\emptyset(\emptyset) \wedge BR\emptyset(1))]$$

$$AD\ MD- = (MSF1(1) \wedge MQ34(1) \wedge MQ35(\emptyset)) \vee [DSF1(1) \wedge (AD\emptyset(\emptyset) \wedge BR\emptyset(\emptyset)) \vee (AD\emptyset(1) \wedge BR\emptyset(1))]$$

SUMMARY

BR: (Ø, FINAL)
AR; (NEW FROM, TO)
MA; (OLD, TO)
MQ; (NEW FROM, TO)

REVISIONS CHANGE NO.	REV.	CHK
REDRAWN 10/29/66	PØ1	
REVISED 3/1/67	PØ2	
REVISED 4/5/67	PØ3	
REVISED 4/25/67	PØ4	

QTY.	DESCRIPTION	PART NO.	ITEM NO.

PARTS LIST

UNLESS OTHERWISE SPECIFIED
DIMENSION IN INCHES
TOLERANCES
DECIMALS ± .005 FRACTIONS ± 1/64 ANGLES ± 0°30'
FINAL SURFACE QUALITY √
REMOVE BURRS AND BREAK SHARP CORNERS
MATERIAL
FINISH

DRN. [signature] DATE 10/29/66
CHKD. DATE
ENG. DATE
PROJ. ENG. DATE
PROD. DATE
FIRST USED ON
SCALE
SHEET 1 OF 2

digital EQUIPMENT CORPORATION MAYNARD, MASSACHUSETTS

TITLE: SHIFT COUNT SUB-ROUTINE & BLT FLOW

SIZE D | CODE | NUMBER SCBT | REV. PØ4

DIST.

This drawing and specifications, herein, are the property of Digital Equipment Corporation and shall not be reproduced or copied or used in whole or in part as the basis for the manufacture or sale of items without written permission.

INSTRUCTION	SHIFT ROTATE	MULX IMULX
INITIAL SWITCHES	XXXC: FAC 2 ST INH	-IR XMULI: FCE ST INH
INITIAL REGISTERS	AR; C (AC) BR; Ø, E MQ; Ø or C (AC2) SC; Ø	AR; C (AC) BR; Ø, E or C(E) MQ; Ø SC; Ø
FT9		AD BR+ EN
ETØ	SC FM BR (11); BR18, 28-35 BR 18(Ø): SC NEGATE SETUP; -E	SC MD SETUP (735) MPF 1 SET

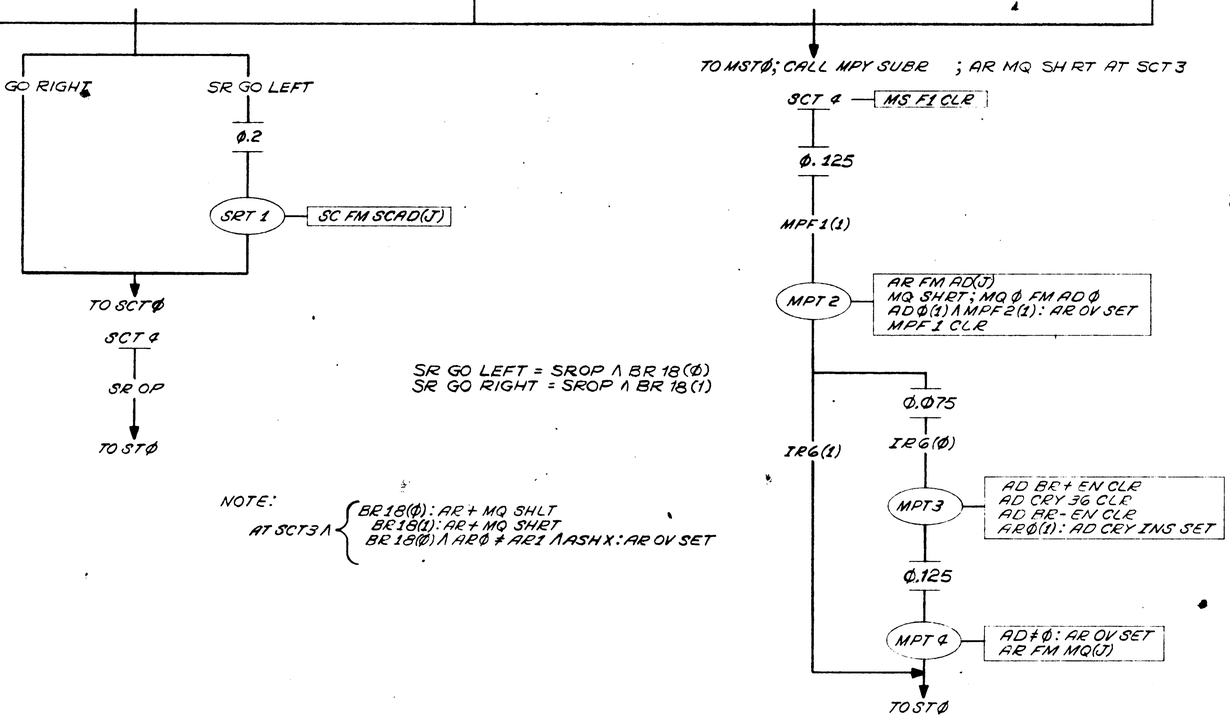

FINAL SWITCHES	XXXXC: SAC2	-MUL (I/B): SAC2 XMUL M: SAC INH XMUL (M/B): SCE

SR OP = IR 24X ∧ - (IR 243 ∨ IR 247)

REVISIONS			
CHK	CHANGE NO.		REV.
	REDRAWN	10/25/66	PØ1
	REVISED	3/1/67	PØ2
	REVISED	4/5/67	PØ3

QTY.	DESCRIPTION	PART NO.	ITEM NO.
	PARTS LIST		

UNLESS OTHERWISE SPECIFIED
UNLESS OTHERWISE SPECIFIED
DIMENSION IN INCHES
TOLERANCES
DECIMALS ± .005 FRACTIONS ± 1/64 ANGLES ± 0°30'
FINAL SURFACE QUALITY ✓
REMOVE BURRS AND BREAK SHARP CORNERS

MATERIAL

FINISH

DRN. Ayorea DATE 10/25/66
CHK'D DATE
ENG. DATE
PROJ. ENG. DATE
PROD. DATE
FIRST USED ON
SCALE
SHEET OF

digital EQUIPMENT CORPORATION
MAYNARD, MASSACHUSETTS

TITLE
SHIFT & MUL FLOW

SIZE D CODE FD NUMBER SMF REV. PØ3
DIST.

This drawing and specifications, herein, are the property of Digital Equipment Corporation and shall not be reproduced or copied or used in whole or in part as the basis for the manufacture or sale of items without written permission.

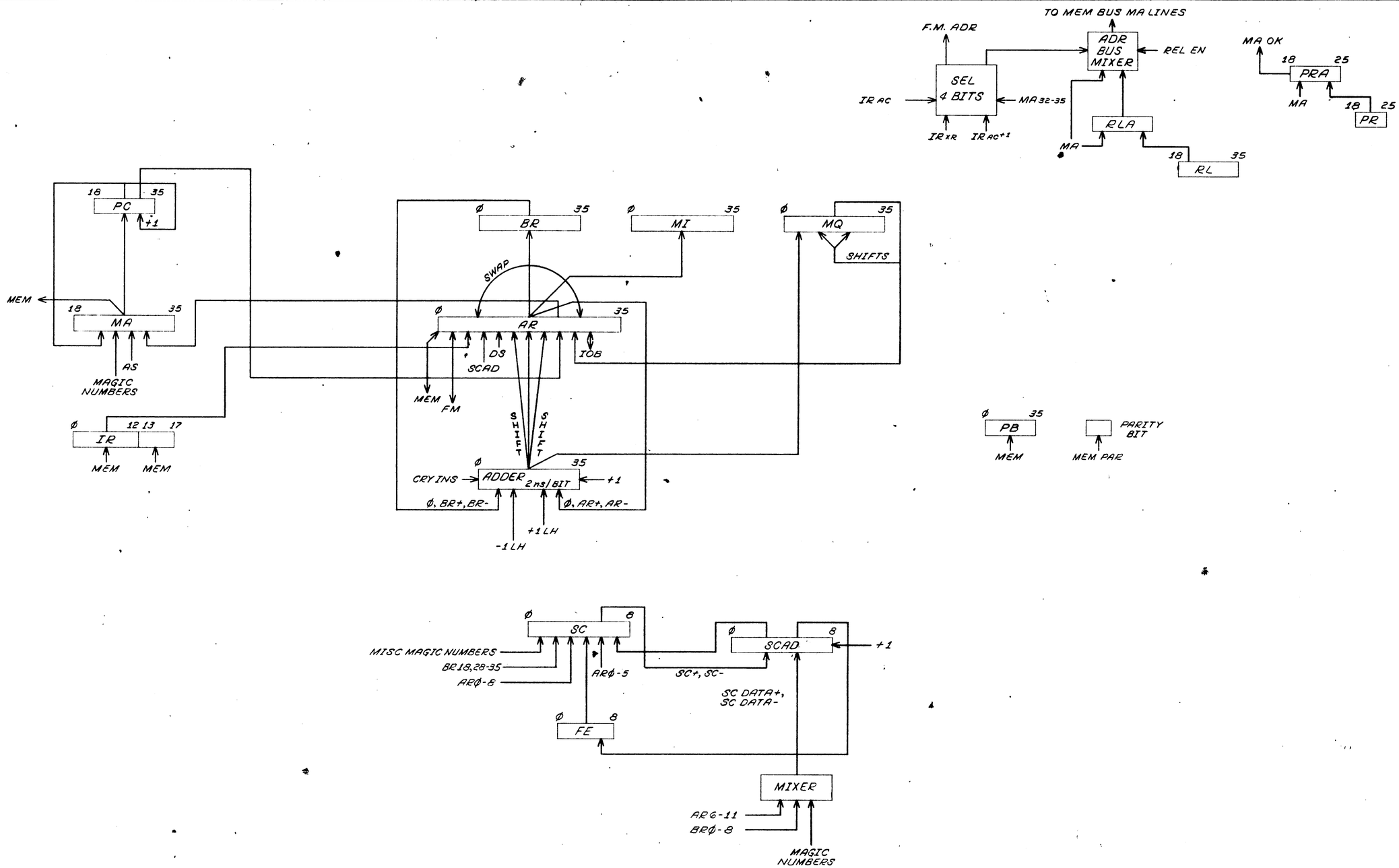

QTY.	DESCRIPTION	PART NO.	ITEM NO.

PARTS LIST

UNLESS OTHERWISE SPECIFIED

UNLESS OTHERWISE SPECIFIED
DIMENSION IN INCHES
TOLERANCES
DECIMALS ± .005 FRACTIONS ± 1/64 ANGLES ± 0°30'
FINAL SURFACE QUALITY ✓
REMOVE BURRS AND BREAK SHARP CORNERS

MATERIAL

FINISH

DRN.		DATE 10/27/66
CHK'D.		DATE
ENG.		DATE
PROJ. ENG.		DATE
PROD.		DATE
FIRST USED ON		
SCALE		
SHEET	OF	

digital EQUIPMENT CORPORATION
MAYNARD, MASSACHUSETTS

TITLE
PDP1Ø
REGISTER ORGANIZATION

SIZE	CODE	NUMBER	REV.
D	FD	REG	PØ1

DIST.

REVISIONS			
CHK	CHANGE NO.		REV.
	REDRAWN 10/27/66		PØ1

This drawing and specifications, herein, are the property of Digital Equipment Corporation and shall not be reproduced or copied or used in whole or in part as the basis for the manufacture or sale of items without written permission.

	1	2	3	4	5	6	7	8	9	10	11	12	13	14	15	16	17	18	19	20	21	22	23	24	25	26	27	28	29	30	31	32	33	34	35	36	37	38	39	40	41	42	43	44
1A	B311*	B611*	B311*	B311*	B611*	B311*	B611*		B311*	B611*	B311*	B611*	B311*	B611*	B311*	B611*	B311*	B311		B135*	B611	B134*	B611	B134*	B212	B163	B134	B212	B134	G700	B131	B131	B131	B131	B131	B131	B131	B131	B131	B131			G796	W012
	DBT5	DBT4 LB BYTE LOAD DBT5 LB BYTE LOAD	DBT4	DBT3	DBT2 DB BYTE DEP DBT3 DB BYTE DEP	DBT2	LBT1 DBT1		FAT2	FAT2 FAT4 FAT1 DB BYTE DEP	FAT3	FAT4 FAT3 FAT5	FAT3 DELAYED	FAT5 FAT6	FAT7	FAT8 FAT6 FAT7 FAT5	FAT8	SRT1		SCAD SC COMP SETUP SCAD NEGATE SETUP SCAD SC+1 SETUP	SCAD COMP SETUP SCAD SC+1 SETUP	SCAD COMP SETUP SCAD SC+1 SETUP SCAD MISC CLR SC EN	SCAD ALL DIS SCAD +1 EN SC NEGATE SETUP SC NEGATE SETUP	SCAD +1 EN SCAD SC COMP SCAD MISC CLR SCAD 33 EN	SCAD DATA Ø SCAD Ø SCAD DATA 1	SCAD DATA Ø SCAD DATA 1 SCAD SC COMP SCAD +1 EN SCAD DATAØ SCAD DATA 1	SCAD DATA Ø SCAD DATA Ø SCAD ALL DIS SCAD DATA 1	SC COMP SC +1 EN	SCAD SC COMP SCAD SC COMP SCAD +1 EN SCAD DATA 1	PULSE TERM	SCAD Ø	SCAD 1	SCAD 2	SCAD 3	SCAD 4	SCAD 5	SCAD 6	SCAD 7	SCAD 8	SCAD +1 INPUT			IBC LEVEL CABLE TO 2BØ3	IND ICSC
1B		B311*	B611*	B311*	B611*	B311*		B165	B611*	B311*	B311*	B135*		B611*	B212*	B134	B611	B134*	B165*	G700	B611*	B163*	B135*	B611*	B212*	B165*	B134*	B212*	B212	B168	B167	B167	B165*	B167	B167	B163*	B167	B167	B165*	B163*	G796	B166	G796	W012
	BYT1 DELAYED		BYT2 BYT1	BYT3 DELAYED	BYT4 BYT3	BYT3		LB BYTE LOAD DB BYTE DEP BYTE PTR INC BYTE PTR NOT INC	BYT6 BYT7A	ETØ DEL A	BYT7	FAT1 BYT7 BYTE PTR NOT INC		BYT7 BYF6 FAT3A	FAF1 BYF4	BYF6 SC STOP SCTØ SCTØ	SRT1 SC STOP SC STOP SW SCTØ	SC-EN FAF1 BYF4 SCTØ	SCAD SC COMP SC NEGATE SETUP SCAD SC +1 SETUP SCAD SC +BR SETUP FAF1	PULSE TERM	SC-EN SCAD ALL DIS SG+EN	SCAD SC+BR SETUP SCAD ALL DIS SC+EN SC-EN SG+EN SC-EN	SCAD ALL DIS SCAD SC+BR SETUP SCAD SC-BR SETUP	SCAD SC+BR SETUP SCAD SC-BR SETUP	SCAD 2ØØ EN SCAD 33 EN	SCAD DATAØ SCAD DATA 1 SCAD BREN SCAD 2ØØ EN	SCAD BREN SCAD BREN SCAD ARG6-11 EN SCAD ARG6-11 EN	SCAD BR EN SCAD AR6-11 EN	P.R Ø	SC Ø,1,2 INPUT	SCAD Ø IN SCAD 1 IN SCAD 2 IN SCAD Ø SCAD 1	SCAD Ø IN SCAD 1 IN SCAD 2 IN SCAD 2 SCAD CRY INS	SC DATA 3 SC DATAØ SC DATA 1 SC DATA Ø SC DATA 1	SCAD 3 IN SCAD 4 IN SCAD 5 IN SCAD 3 SCAD 4	SCAD 3 IN SCAD 4 SCAD 5 IN SCAD 5	SC DATA 3 SC DATA 4 SC DATA 3 SC DATA 4 SC DATA 5 SC DATA 6	SCAD 6 IN SCAD 7 IN SCAD 8 IN SCAD 6	SCAD 6 IN SCAD 7 IN SCAD 8 IN SCAD 6	SC DATA 7 SC DATA 5 SC DATA 6 SC DATA 7 SC DATA 8	SC DATA 5 SC DATA 6 SC DATA 7 SC DATA 8 SC DATA 8		SC 6-8	IBC LEVEL CABLE TO 2BØ2 IBC LEVEL CABLE TO 2BØ4	IND ICSC
1C		B611*	B311*		B611*	B311*	B311*	B611*	B611*	B134*	B165*	B212*		B133	B212	B311	B611	B311	B135	B611	B311	G700	B141*	B134*	R002	B134	B611	W002	B165	B165*	B212	B163	B212	B165*	B212	B163	B212	B133*	B212	B163	G700	B166	G796	W012
	FMT1	FPT3 DELAYED FDT1 FDT1	FPT3		FPT2 FPTØ FPT3 FPT3	FPT2	FPT1	FPTØ FPT1 FPTØ	PULSE TERM	BYF4 BYTE PTR INC NRF1	BYF4 MR CLR BYF5 BYF6 BYF6 NR ROUND NR ROUND	BYF5 NRF1		BYF6 BYF6 BYF6 BYF6 SCAD +1 EN	SC STOP BYF6	SGT2 DELAYED	SCT3 SCT2 SCT2	SCTØ DELAYED	SCT3 SCT1 SCT1	SCT4 SCT1	SCT3 DELAYED	PULSE TERM	SC FM SCAD (J)	SC FM SCAD(J) SC FM SCAD(J) SC FM SCAD(J) SC FM SCAD(J) SC FM SCAD(J)	SC FM SCAD(J) SC FM SCAD(J) SC FM SCAD(J)	SC FM SCAD(J) SC FM SCAD(J) SC CLR ADØ (Ø) B ADØ (Ø) B	SC FM SCAD(J) SC FM SCAD(J) SC FM BR(1) SC FM SCAD(J) SC FM SCAD(J) SC FM BR(1)	SC FM BR(1) SC FM BR(1)	FE CLR B FE CLR B	SC Ø SC Ø SC 1 CLR SC 3 SC 2 CLR SC 6 SC 2 INPUT	SC 2 INPUT SC 2 INPUT SC 3 INPUT SC 6 INPUT	SC Ø	SC Ø INPUT SC 1 INPUT SC 2 INPUT	SC 2	SC 3	SC 3 INPUT SC 4 INPUT SC 5 INPUT	SC 6	SC 7	SC 8	SC 6 INPUT SC 7 INPUT SC 8 INPUT	PULSE TERM	SC 3-5	IBC LEVEL CABLE TO 2CØ4	IND ICSC
1D		B311*	B611*	B311*	B611*	B311*	B311*	B611*	B311*	B311*	G700	B611*	B311*	B611	B311*	B611*	B134*	B311*	B611*	B135*	G796	B611*	B134*	B611*	B611*	B134*	B611	B166	B163	B134	B212*	B168*	B212*	B168*	B212*	B163	B212*	B168*	B133*	B168	G796	G796	G796	W012
	NL T1	NL T1 NL T2	NL T2	NL T3	NL T3 NRT3 NL T4	NL T4	NR T2 DEL	NRT2 NRT2 NRT3	NR T1 DEL	NR T3 DEL	PULSE TERM	NRT6 NRT4 NRT4	NR T6 DEL	NRT5 ARØ ↓ AR1 NRT7 ARØ ↓ AR1	NR T4 DEL	NRTØ NRT1	NRTØ NRTØ NR ROUND BYTE PTR NOT INC	NRTØ DEL	NRT 1ØL NR ROUND NRT 99	NL TØ NRT 99 NR ALL ZERO	LEVEL TERM	NL TØ NRT 99 FE CLR NR ALL ZERO	SC FP SETUP SC FM FE (1) FE CLR	SC FP SETUP SC Ø = ARØ SC FM FE (1) SC Ø = ARØ	SC FM ARO-5 (1) SC FM ARO-8 (1) SC FM ARO-8 (1)	SC CLR SC CLR SC FM ARO-5 (1) SC FM ARO-8 (1)	SC CLR SC MD SETUP SC MD SETUP SC MD SETUP	SC Ø-2	FE Ø INPUT FE 1 INPUT FE 2 INPUT FE 3 INPUT FE 4 INPUT FE 5 INPUT	SC Ø INPUT SC 1 INPUT FE CLR FE CLR	FE Ø FE 1	SC 3,4,5 INPUT	FE 2 FE 3	SC 3,4,5 INPUT	FE 4 FE 5	FE 6 FE 7	SC 6,7,8 INPUT	SC 6,7,8, INPUT	IBC LEVEL CABLE TO 2DØ4	IBC LEVEL CABLE TO 2DØ3	IBC LEVEL CABLE TO 2AØ2	IND ICSC

REV.	CHANGE NO.	CHK
PØ1	WIRE LISTED 2/23	
PØ2	REVISED 3/22/67	
PØ3	REVISED 4/27/67	

REVISIONS

UNLESS OTHERWISE SPECIFIED
DIMENSION IN INCHES
TOLERANCES
DECIMALS ± .005 FRACTIONS ± 1/64 ANGLES ± 0°30'
FINAL SURFACE QUALITY / REMOVE BURRS AND BREAK SHARP CORNERS

MATERIAL

FINISH

DRN. | DATE 1-26-67
CHK'D. | DATE
ENG. | DATE
PROJ. ENG. | DATE
PROD. | DATE
FIRST USED ON
SCALE
SHEET OF

digital EQUIPMENT CORPORATION
MAYNARD, MASSACHUSETTS

TITLE
MODULE UTILIZATION
PDP-1Ø
PANELS 1A-1D

SIZE D | CODE UML | NUMBER 1A-1D | REV. PØ3
DIST.

This drawing and specifications, herein, are the property of Digital Equipment Corporation and shall not be reproduced or copied or used in whole or in part as the basis for the manufacture or sale of items without written permission.

Panel 1E

Slot	Module	Signals
1	B311*	FDT1 DE-LAYED
2	B611*	FDT2; DST1; FDT3
3	B311*	FDT2 DE-LAYED
4	B611*	FDT4; FDT4; FDT5; FDT4
5	G796	
6	B311*	FDT4 DE-LAYED
7	B611*	FDT6; FDT6; FDT6; FDT7; FDT 7
8	B311*	FDT7 DE-LAYED
9	G796	LEVEL TERM
10	B135	BYTE PTR INC; DSF7; DSF7
11	B611*	FDT8; FP EXP ADD; FDT9; FP EXP ADD
12	B311*	FDT8 DE-LAYED
13	B311*	FDT9 DE-LAYED
14	B611*	FDT11; FDT11; FDT10; FP EXP ADD
15		
16	B311*	FDT10 DE-LAYED
17	B311*	FDT11 DE-LAYED
18	B611*	FDT12; FDF3; FDT13; FDF3 FDF1
19	B311*	FDT12 DE-LAYED
20	B311*	FDT13 DE-LAYED
21	B611	SCT3B
22	B133	ARØ = BRØ; ARØ = BRØ; DIV LOW ZERO COND; AR1-8 FM SCAD(J)
23	B165	ARØB; ARØB; ARØ = BRØ; ARØ = SCAD Ø
24	B130*	NR SHRT COND
25	B130*	NR NORMAL
26	B133	AD CR7 INS SET; DIV LOW ZERO COND; ARØ = SCAD Ø; ARØ = SCADØ
27	B165	AD -1 LH CLR; AD CR7 INS CLR; AD10-35 = Ø; AD CR7 INS CLR; AD8-35 = Ø; MR CLR; AD +1 LH CLR
28	G7ØØ	PULSE TERM
29	B133	AD -1 LH SET; AD +1 LH CLR; AD +1 LH SET; AD CRY INS SET
30	B212	AD CRY INS; AD +1 LH
31	B141	AD CRY 36 SET
32	B141	AD CRY 36 CLR
33	B212	AD -1 LH; AD CRY 36
34	B141	AD AR-EN CLR
35	B141	AD AR-EN SET
36	B134*	AD AR+EN SET; AD AR+ EN SET; AD AR+ EN CLR; AD AR- EN CLR
37	B134	AD AR+EN SET; AD AR+ EN SET; MR CLR; AD AR+EN CLR
38	B141	AD AR+ EN CLR
39	B133	AD BR+ EN SET; AD CRY 36 CLR; ADAR- EN LLR; ARMQ FDV NORM
40		
41		
42		
43		
44	WØ12	IND; ICSC

Panel 1F

Slot	Module	Signals
1	B311	DIVT4 DEL
2	B311	SCT4 DEL
3		
4	B611	DST1; DST1; DST2; MPT2
5	B311	DST1 DE-LAYED
6	B611	DST3; DST3; DST3; DST7; DST7
7		
8	B311	DST3 DE-LAYED
9	B611	DST4; DSF7; AD-BR(FT9); DST5; DIVT4
10	B311	DST4 DE-LAYED
11	B212	DSF7; DSF1
12	B165	DSF1 DSF7; DSF1; DSF1; AD CR4 36(FT9); DIVT4
13		
14	B311	DST5 DEL
15	B611	DIVTØ; DIVTØ; DIVTØ; DIVT1; DIVTØ
16	B311	DIVTØ DEL
17	B611	DIVT3; DSF7 V BRØ; DIVT5; DSF7 V BRØ
18	B212*	FDF3; FDF1
19	B611	FDT14; FDF1; ETØA; ETØA
20	B134*	ARØ CLR V; ARØ SET V; AD Ø (1) B; AR1-8 FM ARØ (J)
21		
22	B165*	AD8-35 = Ø; AD10-35 = Ø; FDF1; ARØ-5 FM SCAD 3-8(J); AR1-8 FM SCAD (J)
23	B137*	AR 1-8 FM SCAD (J); AD 9-35 = Ø
24	B137*	AD 8-35 = Ø; AD 10-35 = Ø
25	B13Ø	AD COND
26	B13Ø	AD MD +
27	B130	AD MD -
28	WØØ2	ARFM MQ; ARFM MQ; ARFM PC; ARFM MQA; ARFM MQA; ARFM MQB; ARFM MQB; AR CLR A; AR CLR A; AR CLR; AR CLR
29	B135*	AD CRY 36 CLR; AD CRY 36 SET; AD BR+ EN SET
30	B134	AD CRY 36 SET; AD CRY 36 SET; AD BR+ EN SET; AD BR+ EN SET
31	B168*	AD BR+EN CLR; AD BR-EN CLR; AD CRY 36 CLR
32	B168	AD BR+EN CLR; AD BR-EN CLR; AD CRY 36 CLR
33	B168	AD BR+EN CLR; AD BR-EN CLR; AD CRY 36 CLR
34	B141	AD BR-EN SET
35	B134*	AD BR+ EN SET; AD BR+ EN SET; AD BR+ EN SET; AD BR+ EN CLR
36	B141	AD BR +EN SET
37	B141	AD BR -EN CLR
38	B133	AD AR+ EN SET; AD AR+ EN SET; AD BR+ EN CLR; AD BR+ EN CLR
39	WØØ2	ARLT FMAD; ARLT FM AD; ARRT FMAD; ARRT FMAD; ARFM ADA; ARFM ADB; ARFM ADB; ARFM ADA; AR SWAP; ARLT FMRT; ARRT FMLT
40	G7ØØ	PULSE TERM
41	G796	IBC; LEVEL CABLE TO 2FØ4
42	G796	IBC; LEVEL CABLE TO 2FØ3
43	G796	IBC; LEVEL CABLE TO 2FØ2
44		

Panel 1H

Slot	Module	Signals
1	B311	MPT3 DEL
2	B311	MPT2 DEL
3	B611	MPT2; FMT3; MPF1 SET
4	G796	LEVEL TERM
5	B137	AD AR+ EN (FT9); AR FM AD(J) (ETØ)
6	B137	AD BR+ EN; AD -BR (FT9)
7	B137	AD BR+ EN; AD BR- EN
8	B134	AD CRY 36 (FT9); AD CRY 36 FT9; AR RT FM AD (J) (ET1); AR FM AD (J) (ETØ)
9		
10	B135	AD BR- EN (FT9); AD BR+- (FT9); MPF2 SET
11	B137	AD +1 BOTH (FT9); AD AR- EN (FT9)
12	B611	DIVT4; AD +1 BOTH (FT9); DIVT2; DIVT2
13	B311	DIVT2 DEL
14		
15	B135	AD CRY INS (FT9); AD AR NEGATE (FT9); AD BR+ ONLY (FT9)
16	B134	AD AR+ EN (FT9); AD BR- EN (FT9); AD BR- EN (FT9); AD BR+ EN (FT9)
17	B165	AD BR-EN (FT9); AD BR+EN (FT9) +; AD BR-EN (FT9) +; AD AR NEGATE (FT9); AD CRY 36 (FT9)
18	B13Ø	PC COND Q
19	B13Ø	PC COND R
20		
21	B611*	AR 1-8 FM ARØ (J); AR 1-8 FM ARØ (J); AR 1-8 FM ARØ (J); AR 1-8 FM; SCAD 1-8 (J)
22	B137	AD = Ø; AR SH RT
23	B611	ARØ-5 FM SCAD 3-8(J); AR SH RT; AR SH RT; ARLT FMIR (1); ARLT FMIR (1)
24	B611	ARLT SHLT A; AR SHRT; AD = Ø; ARLT SHLT B; AR SH LT
25	B611	ARRT SHLT A; ARLT CLR A; ARRT SHLT B; ARLT FM AR RT (ET1)
26	B611	ARLT SHRT A; ARRT CLR A; ARLT SHRT B; ARSH RT
27	B611	ARRT SHRT A; ARRT CLR A; ARLT CLR; ARRT SHRT B; ARRT FM AR LT (ET1)
28	B611	AR LT CLR; AR CLR; ARRT CLR; AR RT CLR; AR SWAP (ET2)
29	B611	AR RT FM PC (J) A; ARLT CLR A; AR RT FM PC (J) A; ARRT FM PC (J) B; ARLT FM AD(J) (ETØ)
30	RØØ2	ARLT FM MQ (1); ARLT FM MQ(1); ARRT FM MQ (1); ARRT FM MQ (1)
31	RØØ2	ARLT FM MQ (Ø); ARLT FM MQ (Ø); ARRT FM MQ(Ø); AR RT FM MQ(Ø)
32	B611	ARLT FM MQ (Ø); AR FM MQ(Ø) B; AR LT FM MQ (1); AR LT FM MQ (1); ARRT FM MQ (1)
33	B611	ARRT FM MQ (Ø); AR FM MQ (1) B; ARLT FM MQ (Ø); ARRT FM MQ (1); ARRT FM MQ (Ø)
34	RØØ2	ARLT FMAD (Ø); ARLT FMAD (Ø); ARLT FM AD (1); ARLT FM (1); ARLT FM ARRT(J)
35	B611	ARLT FM AR RT(J) A; MQ SHLT; ARLT FM AR RT (J); ARLT FM AR RT(J) B; ARRT FM AD (J)(ETØ)
36	B611	ARRT FM AR LT(J) A; ARRT FM AD (J) B; ARRT FM AR LT (J); ARRT FM AR LT(J) B; AR FM AD(J) (ET2)
37	B168	ARLT FM AD(J) A; AR RT FM AD (J) A; AR FM AD (Ø) A
38	RØØ2	ARRT FM AD (Ø); ARNT FMAD (Ø); ARRT FM AD (1); AR RT FM AD (1); ARRT FM ARLT (J)
39	B611	ARLT FMAD (Ø); ARFM AD(Ø) B; ARLT FM AD (Ø); ARLT FM AD (1); AR FM MQ (J) (ET2)
40	B611	ARRT FMAD (Ø); AR FM AD(1) B; ARRT FM AD (Ø); ARRT FM AD (1)
41	G799	IBC; PULSE CABLE TO 2DØ2
42	G799	IBC; PULSE CABLE TO 2CØ3
43	G799	IBC; PULSE CABLE TO 2CØ2
44	G799	IBC; PULSE CABLE TO 2BØ3

Panel 1J

Slot	Module	Signals
1	B611	MPT3; BLTF1 SET; MPT4
2	B611	BLTT2; BLTT1; BLTT1
3	B311	BLT T1 DEL
4	B311*	FMT1 DEL
5		
6	B212	MSF1; BLTF1
7	B165	MSF1; MSF1; MR CLR; MSTØ; BLT F1
8	B311	MSTØ DEL
9	B611	MSTØ; MSTØ; MSTØ; MST1; AR FM AD (J) (ETØ)
10		
11	B212	MPF1; MPF2
12	B135	AR FM AD (J) (ET Ø); AR FM AD (J) (ETØ); AR FM FLAGS (ETO)
13	B135	AR FM AD (J) (ET1); AR FM AD (D) (ET1); AR FM MQ (J) (ET1)
14	B165	AD=Ø; AR FM AD(J)(ETØ); ARLT FM AD (J) (ET1); MPF1 CLR
15	G796	LEVEL TERM
16	B137	AR FM AD (J) (ETØ); AR FM PC (J) (ETØ)
17	B137	AR FM AD(1) (ETØ); AR FM AD [O] (ETØ)
18	B137	AR LT FM AR RT (ETØ); ARRT FM AR LT (ETØ)
19	B13Ø	PC COND P
20	B137	PC +1 (ETØ)
21	G7ØØ	PULSE TERM
22	B135	AR CLR; AR SHLT; AR FM DS (1)
23	B611	ARRT FM IOB (1); AR SH LT; ARLT FM IOB (1); AR FM IOB (1)
24	B611	ARLT FM FLAG (J) A; AR FM FM; ARLT FM FLAG (J) B; AR FM FLAGS (J)
25	B611	ARRT FM DS (1); AR CLR; ARLT FM DS (1); AR FM DS (1)
26	B611*	ARLT FM FM (1); AR FM FM; ARRT FM FM (1); AR FM FM
27	B134*	AR CLR; AR SH RT; AR FM FM
28	B134	AR CLR; AR CLR; AR CLR; PC+1 (ET2)
29	B133*	AR FM MQ (Ø) B; AR FM MØ (1) B; AR CLR; AR CLR
30	RØØ2	ARLT CLR; ARLT CLR; ARRT CLR; ARRT CLR
31	B168	AR FM MQ (Ø); AR FM MQ(1); AR FM PC (J)
32	B134	AR FM MQ (Ø); AR FM MQ(1); ARLT CLR A; AR FM PC(J)
33	B134*	AR FM MQ (Ø) A; AR FM MQ(Ø) B; AR FM MQ (1) A
34	B134	AR FM MQ (Ø) A; AR FM MQ(Ø) B; AR FM MQ (1) A; AR FM MQ (1) B
35	B165	AR LT FM AD (J) B; ARRT FM AD (J) B; AR FM MQ(Ø); AR FM MQ (1)
36	B168	AR FM AD [1] A; AR LT FM ARRT (J); AR RT FM ARLT (J)
37	B134	ARLT FM AD(J) A; ARLT FM AD (J); ARRT FM AD (J) A; AR SWAP; MQ FM AD (J)
38	B134*	AR FM AD(Ø) A; AR FM AD(1) A; AR FM AD(Ø) B; AR FM AD (1) B
39	B134*	ARLT FM AD(J) B; ARRT FM AD (J) B; AR FM AD (Ø); AR FM AD (1)
40	B163	ARLT FM AD(J) A; ARRT FM AD(J) A; ARLT FM AD(J) B; ARRT FM AD(J) B; ARLT FM AD(J) B; ARRT FM AD(J) B
41	G7ØØ	PULSE TERM
42	G7ØØ	PULSE TERM
43		
44	WØ12	IND; ICSC

REV.	CHANGE NO.
FØ1	WIRE LISTED 2/23
FØ2	REVISED 3/21/67
FØ3	REVISED 3/31/67
FØ4	REVISED 4/28/67
FØ5	REVISED 5/15/67
FØ6	REVISED 5/25/67

UNLESS OTHERWISE SPECIFIED DIMENSION IN INCHES TOLERANCES DECIMALS ± .005 FRACTIONS ± 1/64 ANGLES ± 0°30' FINAL SURFACE QUALITY √ REMOVE BURRS AND BREAK SHARP CORNERS

DRN. GJB DATE 1-1-67
CHK'D. J. C. PELETIER DATE 2-1-67
ENG. / PROJ. ENG. / PROD. / FIRST USED ON
MATERIAL / FINISH / SCALE / SHEET OF

digital EQUIPMENT CORPORATION MAYNARD, MASSACHUSETTS

TITLE: MODULE UTILIZATION PDP-10 PANELS 1E - 1J

SIZE D CODE UMU NUMBER 1E-1J REV. FØ6

DEC FORM NO.

This drawing and specifications, herein, are the property of Digital Equipment Corporation and shall not be reproduced or copied or used in whole or in part as the basis for the manufacture or sale of items without written permission.

MODULE UTILIZATION PDP-1Ø PANELS 1K-1N

Panel 1K

Slot	Module	Signals
1	B611	FT1; E LONG; FTØ
2	B311	AT6 DEL
3	B611	FT1A; FT1A; FT9
4		
5	B611	BLTT3; ETØ B
6	B137	FT1A; FT9
7	B311	FT1A
8	B165	FCE; FCE; FAC 2; FT9; FT4A
9	B137	FCE; FAC2
10		
11	B137	FCE; FCE
12	B137	FAC INH; FAC INH
13	B133	FCC AC RT; FCC ACLT; PC SET (ETØ)
14	B135	PC SET (ETØ); PC SET (ETØ); PC SET (ETØ)
15		
16	B134	SR GO LEFT; SR GO RIGHT; FCE; FAC INH
17	B165	SR OP; SR GO LEFT; SR GO RIGHT; PC SET (ETØ); PC SET (ETØ)
18	B212	AR OV FLAG; AR CRYØ FLAG
19	B163	AR OV FLAG; AR CRYØ FLAG; AR CRY1 FLAG
20	B212	AR CRY1 FLAG; AR FØV
21	B163	AR OV FLG CLR; AR CRYØ FLG CLR; AR CRY1 FLG CLR; AR FOV CLR; AR OV FLG SET; AR CRYØ FLG SET
22	B133	FMA FN FM AR; FMA FM FM AR; PC FM MA (J); PC FM MA (J)
23	B212	AR FXU; AR DCK
24	B163	AR FOV; AR FXU; AR DCK
25	B611	ETØ C; AR CRY1 FLG SET; ETØ D
26	B611	MC MEM BUS FM AR (1) A; ET1 A
27	B611	MC MEM BUS FM AR (1) B; MC MEM BUS FM AR (1) C
28	B134	ARF CRY STB; ARF CRY STB; PC+1 INH; PC FM MA (J)
29	B137	MQ SH LT; BR FM AR (J) (ETØ)
30	B611	BR 1-8 CLR; BR 1-8 SET
31	G7ØØ	PULSE TERM
32	B611	MQ SHLT A; MQ FM AD (J); MQ SHLT; MQ SHLT B; ARF CRY STB
33	B611	MQ SHLT C; MQ SHLT; BR FM AR (J) (ETØ); MQ SHLT D; MQ SHLT
34	B611	MQ SHRT A; MQ FM AD (J); MQ SHRT B; PC+1 INH
35	B611	MQ SHRT C; MQ SHRT; MQ SHRT D; MQ SHRT
36	B611	MQ FM AD (J) A; MQ FM AD (J); MQ FM AD (J) B; BR FM AR (J) (ET1)
37	B611	MQ FM AD (J) C; MQ FM AD (J); MQ FM AD (J); MQ FM AD (J) D; MQ FM AD (J) (ETØ)
38	RØØ2	BR FM AR (Ø); BR FM AR (1); MQ FM AD (J); PC+1
39	B611	BR LT FM AR (Ø); BR FM AR (J); BRLT FM AR (1); FMA FM FM AR
40	B611	BR RT FM AR (Ø); BR FM AR (J); BR FM AR (1); BRRT FM AR (1); BR FM AR Ø
41	G799	IBC; PULSE CABLE TO 2HØ4
42	G7ØØ	PULSE TERM
43	WØØ2	BR FM AR; BR FM AR; MQ FM AD; MQ FM AD; PC+1; PC+1
44	WØ12	IND; ICSG

Panel 1L

Slot	Module	Signals
1	B311	FT 4A
2	B611	FT7; FT7; FT4A; FT4A
3	B311	FT5
4	B611	FT6; FT6; FT5; E LONG
5	G7ØØ	PULSE TERM
6	B311	FT2 DEL
7	B311	FT3 DEL
8	B611	FT2; FT2; FT2; FT8; FT8
9	B611	FT3; FT3; FT4; FCE
10	B137	FCE PSE
11	B137	FAC INH; FCE PSE
12		
13	B165	FAC INH; FAC INH; FCC ACLT; FCC ACRT; FCE PSE
14	B135	SC SBR (ETØ); PC SET (ETØ); FAC INH
15	B137	EFØ LONG
16	B135	SR OP; IR MD SAC INH; IR FP -IMM
17	B134	IR 134-7; IR 13X; IR 13X; EFØ LONG; IR 13X
18	G796	LEVEL TERM
19	B133	IR TEST SWAP; IR SOXX; IR DIV; IR FP -IMM
20	B133	HWT BR+EN (FT9); HWT SCE; IR ADD; IR SUB
21	B136*	AROV SET; ARF FXU; ARMQ FPSH EN
22	B165	MR START; MR START; AR OV FLAG; AR DCK; AR OV SET
23	B611	ARF FLG FM BR (J); ARMQ ASHC OR MUL LAST; AROV SET; AROV SET
24	B133	AR OV COND; AROV COND; IR 26Ø-3; FCE
25	B163	ARF JFCL CCR; ARF CRY STB; AROV FLG CLR; AR FOV CLR; AR FOV SET
26	B611	ARF JFCL CLR; ARMQ ASHCV MVL LAST; ARF CRY STB
27		
28	B135	PC FM MA (J); PC FM MA (J); PC+1 (ET2)
29	B611	PC RT FM MA (J); PC FM MA (J); PC LT FM MA (J); PC FM MA (J)
30	B137	PC+1; MA FM AR (J)
31	B135	PC+1; PC+1; PC+1
32	B135	PC+1; PC+1; PC+1
33	B133*	MQ SHRT; MQ SHRT; BR 1-8 CLR; BR 1-8 SET
34	B611	MQ CLR; PC+1; IR RDI SETUP; PC+1 (ET2)
35	G7ØØ	PULSE TERM
36	B134	MQ CLR; MQ SHRT; MQ SHLT; PC+1
37	B611	PC LT +1; PC+1; PC+1; PC RT +1; IR RDI SETUP
38	B133	BR FM AR(J); BR FM AR(J); BR FM AR (Ø); MA FM AR(J)
39	B134*	BR FM AR (Ø); BR FM AR (J); MQ FM AD (J); MQ FM AD (J)
40	B134	BR FM AR (J); BR FM AR (J); MQ FM AD(J); NQ FM AD(J)
41	G799	IBC; PULSE CABLE TO 2JØ4
42	G799	IBC; PULSE CABLE TO 2JØ3
43	G799	IBC; PULSE CABLE TO 2JØ2
44	G796	IBC; LEVEL CABLE TO 3EØ6

Panel 1M

Slot	Module	Signals
1	B311	FT7
2		
3	B134	FF1 SET; FF4 SET; IFØ CLR; IFØ SET
4	B212	FF1; FF2
5	B212	FF4; IFØ
6	B165	MR CLR; FF1 CLR; FF2 CLR; FF2 SET; FF4 CLR
7	B165	MR START; E LONG; EUUO F CLR; E XCT F CLR; E XCT F SET
8		
9	B212	E UUO F; E XCT F
10	B611	ET2 B; ET2 B; ET2 B; ETØ E; ETØ E
11	B137	E LONG; E LONG
12	B134	IR UUO; E LONG V ST INH; EFØ LONG; FCE PSE
13	B133	IR MD SCE; IR MD FCE; EUUO F SET; E XCT F SET
14	B165	IR DIV; IR ID IV; IR 13X; IR 13X; IR 134-7
15		
16	B165	IR CAX; IR JSA; IR FDVL; IR FDV NOT L; IR BOOLE DIR
17	B133	IR CAX; IR POPS; IR 26X ∧ NOT JSP; IR TEST FCE
18	B135	IR BOOLE MEM; IR XOSX; IR SKIPS
19	B165	HWT AR RT CLR (ETØ); HWT AR LT CLR (ETØ); HWT ARRT FMAD(J) (ETØ); EFØ LONG; HWT ARLT FMAD(J) (ETØ); HWT E LONG
20	B135	HWT ABRT FM AD(J) (ETØ); AHWT ARRT FM AD(J) (ETØ); IR MD SAC2
21	B135	HWT ARLT FM AD(J) (ETØ); HWT ARLT FM AD(J) (ETØ); HWT E LONG
22	B163	HWT AR RT CLR (ETØ); HWT AR LT CLR (ETØ); HWT ARRT FM AD(J) (ETØ); HWT ARLT FM AD(J) (ETØ); IR IDIV; IRMD SAC 2
23	B156	HWT AR RT CLR (ETØ); HWT AR LT CLR (ETØ); HWT ARRT FMAD(J) (ETØ); HWT ARLT FM AD(J) (ETØ)
24	B156	HWT LT FM RT (ETØ); HWT RT FM LT (ETØ); HWT LT FM RT (ET1); HWT RT FM LT (ET1)
25	G7ØØ	PULSE TERM
26	B13Ø	HWT E TEST
27	B135	ARMQ PRESERVE SIGN; ARMQ AR35FM MQØ EN; ARMQ LRC V MUL
28	B165	ARMQ PRESERVE SIGN; ARMQ FPSH EN; IR FP; IR 2XX
29	B137	AROV SET; PC +1 INH
30	B135	MA FM PC (J); ARF FLAGS FM BR(J); AROV SET
31		
32	B611	MA CLR; MA FM PICH(1)
33	B611	MA FM PC(J) A; AR MQ MULV ASHX VFP; MA FM PC (J) B; AR MQ BYTE MASK
34	B611	MA FM AR (J) A; MA FM AR (J); MA FM AR(J) B; MA FM AR(J)
35	B611	MA FM AS(J)A; MA FM AR (J); MA FM AS (J) B
36	B163	IRLT EN; IRRT EN; IRRT EN; IR RT CLR; IR IOT; IR JRST
37	B165	IRLT EN SET; IR LT EN CLR; IR LT CLR; IR JRST; IR RT EN CLR; IR IOT; IR IOT
38	B134	MA FM AR (J); MA FM AR (J); IR LT CLR; IR RT EN; IR RT CLR
39	B212	IR LT EN; IR RT EN
40	B611	IR LT CLR; MA CLR; IR RT CLR; IRRT CLR; MI PROG EN
41	G796	IBC; LEVEL CABLE TO 2MØ4
42	G796	IBC; LEVEL CABLE TO 2MØ3
43	G799	IBC; PULSE CABLE TO 2MØ2
44	WØ12	IND; ICSC

Panel 1N

Slot	Module	Signals
1	B311	BLT T3 DEL
2	B611	ST2
3		
4	B135	ST2; ST6; ST6
5	G7ØØ	PULSE TERM
6	B611	ST5; ST1; ST6; ST5
7	B137	ST5; ST6
8	B611	ST1; ST1; STØ; STØ; IR AOXX
9	B141	STØ
10	B141	STØ
11	G7ØØ	PULSE TERM
12	B133	IR 254-7; IR FWT; IR MD FCE; E XCT F SET
13	B165	IR FP; IR MD; IR FDVX; E LONG V ST INH; EFØ LONG
14	B134*	IR FP LONG; IR FP IMM; IR FDVL; IR FDV NOT L
15	B165	IR SOXX; IR SKIPS; IR FP LONG; IR FP IMM; IR MD
16		
17	B134	IR BOOLE DIR; IR UUO; IR DIV V FDVL; IR MD
18	B165	IR 1XX; IR 3XX; IR BOOLE; IR HWT; IR TEST
19	B165	IR IOT A; IR XMUL; IR XDIV; IR 25X; IR 26X
20	B165	IR AS; IR ASHC; IR ROTC; IR BLT; IR AOBJP
21	B165	IR AOBJN; IR JRSTA; IR JFCL; IR XCT; IR ROT
22	B135	IR JUMPS; PIOV; SCE
23	B165*	IR FMP; IR UUO; IR UFA; IR DAN; IR FSC
24	B165	IR IBP; KEY ITØ EN; IR POPJ; IR JSR
25	B134	IR 2XX; IR FP; IR BOOLE; IR BOOLE
26	B165	HWT 3 LET; HWT Z; HWT O; HWT E; HWT MEM
27	B156	IR TXOX; IR TXCX; IR TX ZX; IR TXNX
28	B165	IR UUO; IR UUO; IR 2XX
29	B156	IR AS DIR; IR AS IMM; IR AS MEM; IR AS BOTH
30	B156	IR PUSH J; IR PUSH; IR POP; IR POPJ
31	B156	IR JSR; IR JSP; IR JSA; IR JRA
32	B156	IR FWT DIR; IR FWT IMM; IR FWT MEM; IR FWT SELF
33	B156	HWT DIR; HWT IMM; HWT MEM; HWT SELF
34	B156	IR FP DIR; IR FP LVI; IR FP MEM; IR FP BOTH
35	B156	IR EXCH; IR BLT; IR AOBJP; IR AOBJN
36	B156	IR JRSTA; IR JFCL; IR XCT; IR 257
37	B156	IR ASH; IR ROT; IR LSH; IR 243
38	B156	IR ASHC; IR ROTC; IR LSHC; IR 247
39	B156	IR UFA; IR DFN; IR FSC; IR IBP
40	B156	IR IL DB; IR LDB; IR IDPB; IR DPB
41	G796	IBC; LEVEL CABLE TO 2NØ4
42	G799	IBC; PULSE CABLE TO 2NØ3
43	G796	IBC; LEVEL CABLE TO 2HØ2
44	WØ12	IND; ICSC

Revisions

CHK	CHANGE NO.	REV.
	WIRE LISTED 2/23	PØ1
	REVISED 3/13/67	PØ2
	REVISED 3/21/67	PØ3
	REVISED 4/28/67	PØ4
	REVISED 6/3/67	PØ5

UNLESS OTHERWISE SPECIFIED
DIMENSION IN INCHES
TOLERANCES
DECIMALS ± .005 FRACTIONS ± 1/64 ANGLES ± 0°30'
FINAL SURFACE QUALITY
REMOVE BURRS AND BREAK SHARP CORNERS

MATERIAL
FINISH

DRN. H. Stephenson DATE 1-21-67
CHK'D. J.C. PELLETIER DATE 1-31-67
ENG. DATE
PROJ. ENG. DATE
PROD. DATE
FIRST USED ON
SCALE
SHEET OF

digital EQUIPMENT CORPORATION MAYNARD, MASSACHUSETTS

TITLE MODULE UTILIZATION PDP-1Ø PANELS 1K-1N

SIZE D CODE UML NUMBER 1K-1N REV. PØ5

DIST.

This drawing and specifications, herein, are the property of Digital Equipment Corporation and shall not be reproduced or copied or used in whole or in part as the basis for the manufacture or sale of items without written permission.

Panel 1P

Slot	Module	Signals
1	R303	MR PWR CLR ENB
2	R302	MR PWR CLR ENB
3	R4Ø1	MR PWR CLR R
4	B611	MR CLR; MR CLR B; MR CLR B
5	B311	STØ DEL
6	G7ØØ	PULSE TERM
7	B311	ST1
8	RØØ2	STØ
9	B212	AF 2; PI OV
10	B137	SAR ≠ BR; PI OV SET
11	B165	SAR ≠ BR; AF2 CLR; AF2 SET; MR START; PI OV CLR
12	G7ØØ	PULSE TERM
13	B183	SAR ≠ BR V SAC2; SAC INH V FM EN; PI CYC CLR; PI OV CLR
14	B133	PI HOLD; PI HOLD; PI RE-STORE; PI RE-STORE
15	B611	PI RESET B; PI OV EN; PI OV EN; PI TØ
16	B212	EX PI SYNC; PI CYC
17	B165	MR START; MR CLR; EX PI SYNC SET; PI HOLD; PI CYC SET
18	B135	EX USER CLR; SAC INH; SAC INH
19		
20	B133	EX ILL OP SET; PI RE-STORE; EX TRAP COND; EX USER SET
21	B133	EX IOT USER CLR; EX MODE SYNC SET; EX ILL OP CLR; EX ILL OP CLR
22	B212	EX USER; EX ILL OP
23	B135	EX ILL OP SET; EX IOT USER SET; EX MODE SYNC SET
24		
25	B212	EX IOT USER; EX MODE SYNC
26	B13Ø	IR UUO
27	B156	IR MOVEX; IR MOVSX; IR MOVNX; IR MOVMX
28	B156	IR BOOLE Ø; IR BOOLE 1; IR BOOLE 2; IR BOOLE 3
29	B156	IR BOOLE 4; IR BOOLE 5; IR BOOLE 6; IR BOOLE 7
30	B156	IR BOOLE 1Ø; IR BOOLE 11; IR BOOLE 12; IR BOOLE 13
31	B156	IR BOOLE 14; IR BOOLE 15; IR BOOLE 16; IR BOOLE 17
32	B165	IR 24X; IR JRA; MC PAR OK; MI PROG CLR; AS COND
33	B156	IR ØXX; IR 1XX; IR 2XX; IR 3XX
34	B156	IR BOOLE; IR HWT; IR TEST; IR IOTA
35	B156	HWT 3 LET; HWT 2; HWT O; HWT E
36	B156	IR 2ØX; IR 21X; IR XMUL; IR XDIV
37	B156	IR 24X; IR 25X; IR 26X; IR AS
38	B156*	IR FAD; IR FSB; IR FMP; IR FDVX
39	B156	IR CAIX; IR CAMX; IR JUMPX; IR SKIPX
40	B156	IR AOJX; IR AOSX; IR SOJX; IR SOSX
41	G796	IBC; LEVEL CABLE TO 2PØ4
42	G796	IBC; LEVEL CABLE TO 2PØ3
43	G799	IBC; PULSE CABLE TO 2PØ2
44	G796	IBC; LEVEL CABLE TO 2HØ3

Panel 1R

Slot	Module	Signals
1		
2	B165	MR CLR; MR START R; MR CLR R; MC SW COND; MC NON EX MEM
3		
4	R613	MR START R; MR CLR R; MC NONEX MEM
5	B611	MR START; MR PWR CLR R; MR START A; MR START
6	B611	MR CLR; MR START R; MR CLR A; MR CLR
7		
8	G796	LEVEL TERM
9	B311	ST 7 DEL
10	B611	ST8; ST9; KST2; ET1 B; ET1 B
11	B135	ST9; ST1A; ST9
12	B137	ST9
13	B311	ST1A DEL
14	B611	ST1A; ST1A; ST9; ST1A
15	B137	ST1 A; ST7
16	B611	ST6A; ST7
17	B134	MAI FMA SEL; ST9; SCE V FCE PSE; SF6 SET
18	G796	LEVEL TERM
19	B212	SF1; SF6
20	B137	ST INH; ST INH
21	B165	ST INH; SAC INH; SAC 2; SCE; SAC INH
22	B134	ST INH; SCE; SAC INH; SAC INH
23	B137	SCE; SCE
24	B137	SAC INH; SAC 2
25	B137	S AC = Ø; SAC INH
26	B611	ETØ H; ETØ H; ETØ H; ET1 C; ET1 C
27	B165	SAR ≠ BR V SAC 2; SAC INH V FM EN; SF6 CLR; SF1 CLR; IOT GO CLR
28	B135	AT1; ITØ; IOT GO SET
29	B611	IOT T2B; SF1 SET; IOT T1; IOT T1
30	B212	IOT F1; IOT GO
31	B137	AT 3; AT1
32	B611	AT3; IOT F1 SET; MR PWR CLR; IR JRST
33	G7ØØ	PULSE TERM
34	B134	PB CLR; PB PAR; EX ALLOW IOTS; MI PROG CLR
35	B212	MI PROG; PB PAR
36	B611	MI T1; MI LOAD; PB CLR; PB PAR
37	B311	MI T1
38	B135	MI T1; MI T1; MI TØ
39	B611	MI LOAD A; MI T1; MI LOAD B; MI LOAD
40	B611	MI LOAD C; MI PROG SET; MI PROG DIS SW; MI LOAD D; MI PROG EN
41	G796	IBC; LEVEL CABLE TO 2RØ4
42	G799	IBC; PULSE CABLE TO 2RØ3
43	G799	IBC; PULSE CABLE TO 3FØ3
44	WØ12	IND; ICSC

Panel 1S

Slot	Module	Signals
1	B137	MC ADR BRK SET; MC SPLIT CYC EN
2	R3Ø3	MC NON EX MEM
3	B134	MC RD RQ PULSE; MC RD RQ PULSE; MC ADR BRK SET; MC RD/WR RS; MC WR RQ PULSE
4	B611	MC RD/WR RQ PULSE; MC WR RQ PULSE; MC FM WR RQ
5	G7ØØ	PULSE TERM
6	B611	MC FM RD RQ; MC RD RQ PULSE; MC FM RD RQ; MC ADR ACK
7	B311	MC WR RS
8	B135	MC RD/WR RQ PULSE; MC WR RS; MC RS TØ
9	B134	MC ILLEG ADR; MC RQ SET; MC RQ PULSE; MC ADR ACK
10	W1Ø2	MC BUS WR RS; MC PARITY PULSE
11	B133	MC FM EN; MC RSTØ; MC RD RQ PULSE; MC FM WR RQ
12	B611	MC RST1; MC RSTØ; MC RSTØ
13	B135	MR START; MC NON EX MEM; MC RS TØ
14		
15	B611	MC RQ SET; MC ILLEG ADR; MC SW COND
16	B165	MC WR; MC RQ; MC RQ; MC RD B
17	B133	MC SPLIT CYC SYNC; MC SPLIT CYC SYNC; MC STOP; MC STOP
18	B2Ø4	MC SPLIT CYC SYNC; MC PAR STOP
19	B133	ST9; MC REQ CYC; MC PAR STOP; SF8 SET
20	B311	MC ILLEG ADR DEL
21	G7ØØ	PULSE TERM
22	B212	SF 8; MAI FMA SEL
23	B165	SF8 CLR; IT1; MAI FMA SEL; MR START
24	B311	ITØ
25	B311*	IT1
26	B611	AT2; AT2; IT1; IT1
27	B311	AT2
28	B611	ITØ; ITØ; AT1; PI CONO SET
29		
30	B311	AT3
31	B133	IT1; IT1; IT1; IOT F1 CLR
32	B611	ETØ F; ETØ F; ETØ F; ET2 C; ET2 C
33	B134	EX REL A; EX REL A; EX REL B; EX REL B
34	B165	EX REL A; EX REL A; EX REL B; EX REL B; AT3
35	B133	EX CLR; EX SET; PI RESET; MI TØ
36	B611	PIH FM PI CH RQ; PI OK CLRS PIH
37	B611	MITØ; AS COND; AS COND
38	B611	PIR FM IOB; PIR STB
39	R613	EX CLR; EX SET; PI RESET
40	R613	PI CONO SET; PIO SET; PIO CLR
41	G796	IBC; LEVEL CABLE TO 2SØ4
42	G799	IBC; PULSE CABLE TO 2SØ2
43	G796	IBC; LEVEL CABLE TO 3EØ4
44	G796	IBC; LEVEL CABLE TO 3EØ5

Panel 1T

Slot	Module	Signals
1	B135	MC STOP EN; MC SW COND; MC SW COND; CMC SPLIT CYCLE EN
2		
3	B611	MC RD RQ PULSE; MC WR RQ PULSE
4		
5	B611	MC RQ PULSE; MC RD/WR RS
6	B163	MC RD RQ PULSE; MC WR RQ PULSE; MC FM RD RQ
7	B611	MC WR RS
8	B611	MC PAR ERR; MC WR RS; MC RDRS
9	B311	MAI CMC RD RS DEL
10	B311	MC WR RS DEL
11	G7ØØ	PULSE TERM
12	B311	MC RS T1
13	B611	MC STOP; MC NON EX MEM; MC NON EX MEM; MC STOP EN
14	B311	MC ILLEG ADR
15	B312	MC RQ SET
16	B2Ø4	MC RD; MC WR; MC RQ; MC STOP
17	B134	MC RD; MC RD; MC REQ CYC; MC WR
18	B611	MC NXM RST; MC NXM RD
19	B133	MC STOP CLR
20	B311	MC STOP SET
21	B134	MC REQ CYC; FMA FM FM AR; MC PAR ERR; MC STOP CLR
22	B311	AT3 DEL
23	B611	AT4; MR CLR; AT6; AT6
24	B311	ETØ
25	B311	ETØ
26	B611	ETØ; ETØ; ET1; MC PAR OK
27	B311	ETØ DEL
28		
29	B311	ET1 DEL
30	B611	ET2; MC PAR STOP; ET2A; ET2A
31	B311	FMA T1
32	B611	FMA T1; MC IGNORE PARITY SET; FMA T2; MI LOAD
33	B311	FMA T2
34		
35	B134	FMA AC SET; FMA AC CLR; FMA MA EN; MC IGNORE PARITY CLR
36	B165	FMA AC2 CLR; MR CLR; FMA AC2 SET; FMA MA EN; FMA XR CLR
37	B163	FMA AC CLR; FMA AC2 SET; FMA AC SET; FMA AC2 CLR
38	B212	FMA XR; FMA AC
39	B212	FMA AC2; MC IGNORE PARITY
40	B134	FMA XR EN; FMA AC EN; FMA AC2 EN; FMA XR SET
41		
42		
43	G799	IBC; PULSE CABLE TO 2TØ2
44		

Revisions

Change No.	Rev.
WIRE LISTED 2/23	PØ1
REVISED 3/10/67	PØ2
REVISED 3/13/67	PØ3
REVISED 3/21/67	PØ4
REVISED 4/1/67	PØ5
REVISED 4/28/67	PØ6
REVISED 5/13/67	PØ7

UNLESS OTHERWISE SPECIFIED
DIMENSION IN INCHES
TOLERANCES
DECIMALS ± .005 FRACTIONS ± 1/64 ANGLES ± 0°30'
FINAL SURFACE QUALITY
REMOVE BURRS AND BREAK SHARP CORNERS
MATERIAL
FINISH

DRN. [signature] DATE 1-20-67
CHK'D. DATE
ENG. DATE
PROJ. ENG. DATE
PROD. DATE
FIRST USED ON
SCALE

digital EQUIPMENT CORPORATION MAYNARD, MASSACHUSETTS

TITLE: MODULE UTILIZATION PDP-1Ø PANELS 1P→1T

SIZE D | CODE UML | NUMBER 1P-1T | REV. PØ7

This drawing and specifications, herein, are the property of Digital Equipment Corporation and shall not be reproduced or copied or used in whole or in part as the basis for the manufacture or sale of items without written permission.

Panel 2A

Slot	Module	Signals
1	WØ12	IND ICSC
2	G796	IBC LEVEL CABLE TO 1D43
3	G796	IBC LEVEL CABLE TO 1A43
4	B212	AD AR-EN / AD AR-EN B
5	B212	AR AR+EN / AD AR+EN B
6	B131	AD CRY Ø
7	B131	AD Ø
8	B131	AD 1
9	B131	AD 2
10	B131	AD 3
11	B131	AD 4
12	B131	AD 5
13	B131	AD 6
14	B131	AD 7
15	B131	AD 8
16	B131	AD 9
17	B131	AD 1Ø
18	B131	AD 11
19	B131	AD 12
20	B131	AD 13
21	B131	AD 14
22	B131	AD 15
23	B131	AD 16
24	B131	AD 17
25		
26	B131	AD 18
27	B131	AD 19
28	B131	AD 2Ø
29	B131	AD 21
30	B131	AD 22
31	B131	AD 23
32	B131	AD 24
33	B131	AD 25
34	B131	AD 26
35	B131	AD 27
36	B131	AD 28
37	B131	AD 29
38	B131	AD 3Ø
39	B131	AD 31
40	B131	AD 32
41	B131	AD 33
42	B131	AD 34
43	B131	AD 35
44	B131	AD CRY 36

Panel 2B

Slot	Module	Signals
1	WØ12	IND ICSC
2	G796	IBC LEVEL CABLE TO 1B43
3	G799	IBC PULSE CABLE TO 1H44
4	G796	IBC LEVEL ABLE TO 1B41
5	B212	AD BR+EN / AD BR+EN B
6	B13Ø	AD CRY 1
7	B167	AD Ø IN / AD 1 IN / AD 2 IN / AD Ø / AD 1
8	B167	AD Ø IN / AD 1 IN / AD 2 IN / AD 2 / AD CRY Ø
9	B168	AR 3 CLR / AR 3 SET / ARY CLR
10	B167	AD 3 IN / AD 4 IN / AD 5 IN / AD 3 / AD 4
11	B167	AD 3 IN / AD 4 IN / AD 5 IN / AD 5
12	B168	AR 6 CLR / AR 6 SET / AR 7 CLR
13	B167	AD 6 IN / AD 7 IN / AD 8 IN / AD 6 / AD 7
14	B167	AD 6 IN / AD 7 IN / AD 8 IN / AD 8
15	B168	AR 9 CLR / AR 9 SET / AR 1Ø CLR
16	B167	AD 9 IN / AD 1Ø IN / AD 11 IN / AD 9 / AD 1Ø
17	B167	AD 9 IN / AD 10 IN / AD 11 IN / AD 11
18	B168	AR 12 CLR / AD 12 SET / AD 13 CLR
19	B167	AD 12 IN / AD 13 IN / AD 14 IN / AD 12 / AD 13
20	B167	AD 12 IN / AD 13 IN / AD 14 IN / AD 14
21	B168	AR 15 CLR / AR 15 SET / AR 16 CLR
22	B167	AD 15 IN / AD 16 IN / AD 17 IN / AD 15 / AD 16
23	B167	AD 15 IN / AD 16 IN / AD 17 / AD 17INP
24	B135	AD 17INP / AD 17INP / AD 15 CLR / AD 15 SET U
25	G7ØØ	PULSE TERM
26	B167	AD 18 IN / AD 19 IN / AD 2Ø IN / AD 18 / AD 19
27	B167	AD 18 IN / AD 19 IN / AD 2Ø IN / AD 2Ø
28	B168	AR 19 SET / AR 2Ø CLR / AR 20 SET
29	B167	AD 21 IN / AD 22 IN / AD 23 IN / AD 21 / AD. 22
30	B167	AD 21 IN / AD 22 IN / AD 23 IN / AD 23
31	B168	AR 21 CLR / AR 21 SET / AR 22 CLR
32	B167	AD 24 IN / AD 25 IN / AD 26 IN / AD 24 / AD 25
33	B167	AD 24 IN / AD 25 IN / AD 26 IN / AD 26
34	B168	AR 24 CLR / AR 24 SET / AR 25 CLR
35	B167	AD 27 IN / AD 28 IN / AD 29 IN / AD 27 / AD 28
36	B167	AD 27 IN / AD 28 IN / AD 29 IN / AD 29
37	B168	AR 27 CLR / AR 27 SET / AR 28 CLR
38	B167	AD 3Ø IN / AD 31 IN / AD 32 IN / AD 3Ø / AD 32
39	B167	AD 3Ø IN / AD 31 IN / AD 32 IN / AD 31
40	B168	AR 3Ø CLR / AR 3Ø SET / AR 31 CLR
41	B167	AD 33 IN / AD 34 IN / AD 35 IN / AD 33 / AD 34
42	B167	AD 33 IN / AD 34 IN / AD 35 IN / AD 35
43	B168	AR 33 CLR / AR 33 SET / AR 34 CLR
44	G7ØØ	PULSE TERM

Panel 2C

Slot	Module	Signals
1	WØ12	IND ICSC
2	G796	IBC PULSE CABLE TO 1H43
3	G799	IBC PULSE CABLE TO 1H42
4	G799	IBC LEVEL CABLE TO 1C43
5	B212	AD BR-EN / AD BR-EN B
6	B168	ARØ CLR / ARØ SET / AR 1 CLR
7	B212	AR Ø / AR 1
8	B168	AR 1 SET / AR 2 CLR / AR 2 SET
9	B212	AR 2 / AR 3
10	B168	AR 4 SET / AR 5 CLR / AR 5 SET
11	B212	AR 4 / AR 5
12	B168	AR 7 SET / AR 8 CLR / AR 8 SET
13	B212	AR 6 / AR 7
14	B165	ARØ CLR / ARØ SET U / AR 1 CLR / AR 1 SET U / AR 2 CLR / AR 2 SET U / AR 3 CLR / AR 3 SET U / AR 4 CLR / AR 4 SET U
15	B212	AR 8 / AR 9
16	B168	AR 1Ø SET / AR 11 CLR / AR 11 SET
17	B212	AR 1Ø / AR 11
18	B165	AR 5 CLR / AR 5 SET U / AR 6 CLR / AR 6 SET U / AR 7 CLR / AR 7 SET U / AR 8 CLR / AR 8 SET U / AR 9 CLR / AR 9 SET U
19	B212	AR 12 / AR 13
20	B168	AR 13 SET / AR 14 CLR / AR 14 SET
21	B212	AR 14 / AR 15
22	B168	AR 16 SET / AR 17 CLR / AR 17 SET
23	B212	AR 16 / AR 17
24	B165	AR 1Ø CLR / AR 10 SET U / AR 11 CLR / AR 11 SET U / AR 12 CLR / AR 12 SET U / AR 13 CLR / AR 13 SET U / AR 14 CLR / AR 14 SET U
25	G7ØØ	PULSE TERM
26	B212	AR 18 / AR 19
27	B168	AR 18 CLR / AR 18 SET / AR 19 CLR
28	B212	AR 2Ø / AR 21
29	B165	AR 16 CLR / AR 16 SET U / AR 17 CLR / AR 17 SET U / AR 18 CLR / AR 18 SET U / AR 19 CLR / AR 19 SET U / AR 2Ø CLR / AR 2Ø SET U
30	B212	AR 22 / AR 23
31	B168	AR 22 SET / AR 23 CLR / AR 23 SET
32	B212	AR 24 / AR 25
33	B165	AR 21 CLR / AR 21 SET U / AR 22 CLR / AR 22 SET U / AR 23 CLR / AR 23 SET U / AR 24 CLR / AR 24 SET U / AR 25 CLR / AR 25 SET U
34	B212	AR 26 / AR 27
35	B168	AR 25 SET / AR 26 CLR / AR 26 SET
36	B212	AR 28 / AR 29
37	B168	AR 28 SET / AR 29 CLR / AR 29 SET
38	B212	AR 3Ø / AR 31
39	B165	AR 26 CLR / AR 26 SET U / AR 27 CLR / AR 27 SET U / AR 28 CLR / AR 28 SET U / AR 29 CLR / AR 29 SET U / AR 3Ø CLR / AR 3Ø SET U
40	B212	AR 32 / AR 33
41	B168	AR 31 SET / AR 32 CLR / AR 32 SET
42	B212	AR 34 / AR 35
43	B168	AR 34 SET / AR 35 CLR / AR 35 SET
44	B165	AR 31 CLR / AR 31 SET U / AR 32 CLR / AR 32 SET U / AR 33 CLR / AR 33 SET U / AR 34 CLR / AR 34 SET U / AR 35 CLR / AR 35 SET U

Panel 2D

Slot	Module	Signals
1	WØ12	IND ICSC
2	G796	IBC PULSE CABLE TO 1H41
3	G796	IBC LEVEL CABLE TO 1D42
4	G799	IBC LEVEL CABLE TO 1D41
5	G7ØØ	PULSE TERM
6	B13Ø	AR Ø SHRT INPUT
7	B168	AR Ø CLR / AR 1 CLR / AR 2 CLR
8	B168	AR Ø SET / AR 1 SET / AR 2 SET
9	B168	AR Ø SET U / AR 1 SET U / AR 2 SET U
10	B168	AR 3 CLR / AR 4 CLR / AR 5 CLR
11	B168	AR 3 SET / AR 4 SET / AR 5 SET
12	B168	AR 3 SET U / AR 4 SET U / AR 5 SET U
13	B168	AR 6 CLR / AR 7 CLR / AR 8 CLR
14	B168	AR 6 SET / AR 7 SET / AR 8 SET
15	B168	AR 6 SET U / AR 7 SET U / AR 8 SET U
16	B168	AR 9 CLR / AR 1Ø CLR / AR 11 CLR
17	B168	AR 9 SET / AR 1Ø SET / AR 11 SET
18	B168	AR 9 SET U / AR 1Ø SET U / AR 11 SET U
19	B168	AR 12 CLR / AR 13 CLR / AR 14 CLR
20	B168	AR 12 SET / AR 13 SET / AR 14 SET
21	B168	AR 12 SET U / AR 13 SET U / AR 14 SET U
22	B168	AR 15 CLR / AR 16 CLR / AR 17 CLR
23	B168	AR 15 SET / AR 16 SET / AR 17 SET
24	B168	AR 15 SET U / AR 16 SET U / AR 17 SET U
25	G7ØØ	PULSE TERM
26	B168	AR 18 CLR / AR 19 CLR / AR 2Ø CLR
27	B168	AR 18 SET / AR 19 SET / AR 2Ø SET
28	B168	AR 18 SET U / AR 19 SET U / AR 2Ø SET U
29	B168	AR 21 CLR / AR 22 CLR / AR 23 CLR
30	B168	AR 21 SET / AR 22 SET / AR 23 SET
31	B168	AR 21 SET U / AR 22 SET U / AR 23 SET U
32	B168	AR 24 CLR / AR 25 CLR / AR 26 CLR
33	B168	AR 24 SET / AR 25 SET / AR 26 SET
34	B168	AR 24 SET U / AR 25 SET U / AR 26 SET U
35	B168	AR 27 CLR / AR 28 CLR / AR 29 CLR
36	B168	AR 27 SET / AR 28 SET / AR 29 SET
37	B168	AR 27 SET U / AR 28 SET U / AR 29 SET U
38	B168	AR 3Ø CLR / AR 31 CLR / AR 32 CLR
39	B168	AR 3Ø SET / AR 31 SET / AR 32 SET
40	B168	AR 3Ø SET U / AR 31 SET U / AR 32 SET U
41	B168	AR 33 CLR / AR 34 CLR / AR 35 CLR
42	B168	AR 33 SET / AR 34 SET / AR 35 SET
43	B168	AR 33 SET U / AR 34 SET U / AR 35 SET U
44	B13Ø	AR 35 S4 LT INP

Revisions

REV.	CHANGE NO.	CHK
PØ1	WIRE LISTED 2/23	
PØ2	REVISED 4/28/67	

UNLESS OTHERWISE SPECIFIED
DIMENSION IN INCHES
TOLERANCES
DECIMALS ± .005 FRACTIONS ± 1/64 ANGLES ± 0°30'
FINAL SURFACE QUALITY ✓
REMOVE BURRS AND BREAK SHARP CORNERS
MATERIAL
FINISH

DRN. N. Stephenson DATE 1-28-67
CHK'D. DATE
ENG. DATE
PROJ. ENG. DATE
PROD. DATE
FIRST USED ON
SCALE
SHEET OF

digital EQUIPMENT CORPORATION, MAYNARD, MASSACHUSETTS

TITLE: MODULE UTILIZATION PDP-1Ø PANELS 2A-2D

SIZE D CODE UML NUMBER 2A-2D REV. PØ2

DIST.

DEC FORM NO

This drawing and specifications, herein, are the property of Digital Equipment Corporation and shall not be reproduced or copied or used in whole or in part as the basis for the manufacture or sale of items without written permission.

Panel 2E

Slot	Module	Contents
1	WØ12	IND / ICSC
2	WØ12	IND / ICSC
3	WØ12	IND / ICSC
4	WØ12	IND / ICSC
5	B134	AD Ø-7 =Ø / AD Ø-7 =Ø / (blank) / AD Ø-7 =Ø / (blank) / AD Ø-7 =Ø
6	B168*	ARØ CLR U / ARØ SET U / AR1 CLR U
7	B130	AR Ø SHLT INPUT
8	B168*	AR1 SET U / AR2 CLR U / AR2 SET U
9	W1Ø2	M BUS Ø / M BUS 1 / M BUS 2 / M BUS 3
10	B168*	AR3 CLR U / AR3 SET U / AR4 CLR U
11	B165*	(blank) / (blank) / BR 1-4 CLR / BR 5-8 CLR / BR 1-4 SET / BR 5-8 SET
12	B168*	AR4 SET U / AR5 CLR U / AR5 SET U
13	W1Ø2	M BUS 4 / M BUS 5 / M BUS 6 / M BUS 7
14	B168*	AR6 CLR U / AR6 SET U / AR7 CLR U
15	B163*	ARØ SET / AR1 SET / AR2 SET / AR3 SET / AR4 SET / AR5 SET
16	B168*	AR7 SET U / AR8 CLR U / AR8 SET U
17	W1Ø2	M BUS 8 / M BUS 9 / M BUS 1Ø / M BUS 11
18	B163	BR8 SET / BR9 SET / BR1Ø CLR / BR11 CLR / BR1Ø SET / BR11 SET
19	B163*	AR6 SET / AR7 SET / AR8 SET / AR9 SET / AR1Ø SET / AR11 SET
20	B163	BR12 CLR / BR13 CLR / BR12 SET / BR13 SET / BR14 CLR / BR15 CLR
21	W1Ø2	M BUS 12 / M BUS 13 / M BUS 14 / M BUS 15
22	B163	BR14 SET / BR15 SET / BR16 CLR / BR17 CLR / BR16 SET / BR17 SET
23	B163*	AR12 SET / AR13 SET / AR14 SET / AR15 SET / AR16 SET / AR17 SET
24	B134	AD ~~8-9~~ =Ø / AD 18-19 =Ø / MQT SHLT INP
25	G7ØØ	PULSE TERM
26	W1Ø2	M BUS 16 / M BUS 17 / M BUS 18 / M BUS 19
27	B163	BR 18 CLR / BR 19 CLR / BR 18 SET / BR 19 SET / BR 2Ø CLR / BR 21 CLR
28	B134	AD 1Ø-17 =Ø / AD 1Ø-17 =Ø / AD 1Ø-17 =Ø / AD 1Ø-17 =Ø
29	B163	BR 2Ø SET / BR 21 SET / BR 22 CLR / BR 23 CLR / BR 22 SET / BR 23 SET
30	W1Ø2	M BUS 2Ø / M BUS 21 / M BUS 22 / M BUS 23
31	B134	AD 2Ø-27 =Ø / AD 2Ø-27 =Ø / MQ9-35=Ø / AD 2Ø-27 =Ø / MQ9 -35 =Ø / AD 2Ø-27 =Ø
32	B134*	MQ 9-35 =Ø / MQ 9-35 =Ø / MQ9 -35 =Ø / MQ9 -35 =Ø / MQ9 -35 =Ø / MQ9 -35 =Ø
33	B163	BR 24 CLR / BR 25 CLR / BR 24 SET / BR 25 SET / BR 26 CLR / BR 27 CLR
34	W1Ø2	M BUS 24 / M BUS 25 / M BUS 26 / M BUS 27
35	B163	BR 26 SET / BR 27 SET / BR 28 CLR / BR 29 CLR / BR 28 SET / BR 29 SET
36	B134	AD 28-35 =Ø / AD 28-35 =Ø / AD 28-35 =Ø / AD 28-35 =Ø
37	B137*	MQ 9-35 =Ø / MQ 9-35 =Ø
38	W1Ø2	M BUS 28 / M BUS 29 / M BUS 3Ø / M BUS 31
39	B163	BR 3Ø CLR / BR 31 CLR / BR 3Ø SET / BR 31 SET / BR 32 CLR / BR 33 CLR
40	B137*	MQ 9-35 =Ø / MQ 9-35 =Ø
41	B163	BR 32 SET / BR 33 SET / BR 34 CLR / BR 35 CLR / BR 34 SET / BR 35 SET
42	W1Ø2	M BUS 32 / M BUS 33 / M BUS 34 / M BUS 35
43	G796	LEVEL TERM
44	G7ØØ	PULSE TERM

Panel 2F

Slot	Module	Contents
1	WØ12	IND / 1CSC
2	G796	IBC / LEVEL CABLE TO 1F43
3	G796	IBC / LEVEL CABLE TO 1F42
4	G796	IBC / LEVEL CABLE TO 1F41
5	G7ØØ	PULSE TERM
6	B163	BRØ CLR / BR1 CLR / BRØ SET / BR1 SET / BR2 CLR / BR3 CLR
7	B212	BRØ / BR1
8	WØ1Ø	ARØ CLR U / AR1 CLR U / AR2 CLR U / AR3 CLR U / AR4 CLR U / AR5 CLR U / AR6 CLR U / AR7 CLR U / AR8 CLR U / IR3 SET / IR4 SET / IR5 SET / IR6 SET / IR7 SET / IR8 SET
9	B212	BR2 / BR3
10	B168	MQ 1 SET / MQ 2 CLR / MQ 2 SET
11	B212	BR4 / BR5
12	B163	BR2 SET 1 / BR3 SET 1 / BR4 CLR 1 / BR5 CLR 1 / BR4 SET 1 / BR5 SET
13	B212	BR6 / BR7
14	B168	MQ 6 CLR / MQ 6 SET / MQ 7 CLR
15	B212	BR8 / BR9
16	B163	BR6 CLR 1 / BR7 CLR 1 / BR6 SET 1 / BR7 SET 1 / BR8 CLR 1 / BR9 CLR
17	B212	BR1Ø / BR11
18	B168	MQ 9 CLR / MQ 9 SET / MQ 1Ø CLR
19	B212	BR12 / BR13
20	B168	MQ 12 CLR / MQ 12 SET / MQ 13 CLR
21	B212	BR14 / BR15
22	B168	MQ 15 CLR / MQ 15 SET / MQ 16 CLR
23	B212	BR16 / BR17
24	B168	MQ 18 CLR / MQ 18 SET / MQ 19 CLR
25	G7ØØ	PULSE TERM
26	B212	BR 18 / BR 19
27	B168	MQ 19 SET / MQ 2Ø CLR / MQ 2Ø SET
28	B212	BR 2Ø / BR 21
29	B168	MQ 21 CLR / MQ 21 SET / MQ 22 CLR
30	B212	BR 22 / BR 23
31	B168	MQ 22 SET / MQ 23 CLR / MQ 23 SET
32	B212	BR 24 / BR 25
33	B168	MQ 25 SET / MQ 26 CLR / MQ 26 SET
34	B212	BR 26 / BR 27
35	B168	MQ 27 CLR / MQ 27 SET / MQ 28 CLR
36	B212	BR 28 / BR 29
37	B168	MQ 28 SET / MQ 29 CLR / MQ 29 SET
38	B212	BR 3Ø / BR 31
39	B168	MQ 31 SET / MQ 32 CLR / MQ 32 SET
40	B212	BR 32 / BR 33
41	B168	MQ 33 CLR / MQ 33 SET / MQ 34 CLR
42	B212	BR 34 / BR 35
43	B168	MQ 34 SET / MQ 35 CLR / MQ 35 SET
44	G7ØØ	PULSE TERM

Panel 2H

Slot	Module	Contents
1	WØ12	IND / ICSC
2	G796	IBC / LEVEL CABLE TO 1N43
3	G796	IBC / LEVEL CABLE TO 1P44
4	G799	IBC / PULSE CABLE TO 1K41
5	B13Ø	MQ Ø SHLT INP
6	B13Ø	MQ Ø SHRT INP
7	B212	MQ Ø / MQ 1
8	B168	MQ Ø CLR / MQ Ø SET / MQ 1 CLR
9	B212	MQ 2 / MQ 3
10	B168	MQ 3 CLR / MQ 3 SET / MQ 4 CLR
11	B212	MQ 4 / MQ 5
12	B168	MQ 4 SET / MQ 5 CLR / MQ 5 SET
13	B212	MQ 6 / MQ 7
14	B168	MQ 7 SET / MQ 8 CLR / MQ 8 SET
15	B212	MQ 8 / MQ 9
16	B13Ø	MQ 8 SHRT INP
17	B212	MQ 1Ø / MQ 11
18	B168	MQ 1Ø SET / MQ 11 CLR / MQ 11 SET
19	B212	MQ 12 / MQ 13
20	B168	MQ 13 SET / MQ 14 CLR / MQ 14 SET
21	B212	MQ 14 / MQ 15
22	B168	MQ 16 SET / MQ 17 CLR / MQ 17 SET
23	B212	MQ 16 / MQ 17
24		
25	G7ØØ	PULSE TERM
26	B212	MQ 18 / MQ 19
27	B166	PC 18-2Ø COUNT
28	B212	MQ 2Ø / MQ 21
29		
30	B212	MQ 22 / MQ 23
31	B168	MQ 24 CLR / MQ 24 SET / MQ 25 CLR
32	B212	MQ 24 / MQ 25
33	B166	PC 24-26 COUNT
34	B212	MQ 26 / MQ 27
35	B165	MQ 18-22 CLR / MQ 23-26 CLR / MQ 27-31 CLR / MQ 32-35 CLR / MQ 35 CLR
36	B212	MQ 28 / MQ 29
37	B168	MQ 3Ø CLR / MQ 3Ø SET / MQ 31 CLR
38	B212	MQ 3Ø / MQ 31
39	B166	PC 3Ø-32 COUNT
40	B212	MQ 32 / MQ 33
41	B166	PC 33-35 COUNT
42	B272	MQ 34 / MQ 35
43	B13Ø	MQ 35 SH LT INP
44	G7ØØ	PULSE TERM

Panel 2J

Slot	Module	Contents
1	WØ12	IND / ICSC
2	G799	IBC / PULSE CABLE TO 1L43
3	G799	IBC / PULSE CABLE TO 1L42
4	G799	IBC / PULSE CABLE TO 1L41
5	G796	LEVEL TERM
6	B13Ø	MQ1 SHRT INP
7	B212	IR Ø / IR 1
8	B163	IR Ø SET / IR 1 SET / IR Ø SET / IR 1 SET / IR 2 SET / IR 3 SET
9	B212	IR 2 / IR 3
10	B163	IR 2 SET / IR 3 SET / IR 4 SET / IR 5 SET / IR 4 SET / IR 5 SET
11	B212	IR 4 / IR 5
12	B165	MQ Ø-4 CLR / (blank) / MQ 5-8 CLR / IR Ø-4 CLR / (blank) / IR 5-8 CLR / IR 9-12 SET
13	B212	IR 6 / IR 7
14	B163	IR 6 SET / IR 7 SET / IR 6 SET / IR 7 SET / IR 8 SET / IR 9 SET
15	B212	IR 8 / IR 9
16	WØ1Ø	IRØ SET / IR1 SET / IR2 SET / IR3 SET / IR4 SET / IR5 SET / IR6 SET / IR7 SET / IR8 SET / IR9 SET / IR1Ø SET / IR11 SET / IR14 SET / IR15 SET / IR9 SET
17	B212	IR 1Ø / IR 11
18	B163	IR 8 SET / IR 9 SET / IR 1Ø SET / IR 11 SET / IR 12 SET / (blank)
19	B212	IR 12 / IR 13
20	B133	IR 12 CLR / IR 16 SET / IR 12 SET / IR 17 SET / MQ 7 SHLT INP / IR 12 SET
21	B212	IR 14 / IR 15
22	B165	MQ 9-13 CLR / (blank) / MQ 14-17 CLR / (blank) / IR 12 SET / IR 13-14 CLR / IR 13 SET / IR 15-17 CLR
23	B212	IR 16 / IR 17
24	B163	(blank) / IR 13 SET / IR 14 SET / IR 15 SET / IR 16 SET / IR 17 SET
25	WØØ5	IR Ø-4 CLR / MQ Ø-4 CLR / MQ9-13 CLR / MQ18-22 CLR / MQ27-31 CLR / (blank) / DS 15 / DS 16 / DS 17 / DS 18 / DS 19 / DS 2Ø / DS 21 / DS 22 / DS 23
26	B212	PC 18 / PC 19
27	B163	PC 18 CLR / PC 18 SET / PC 19 CLR / PC 19 SET / PC 2Ø CLR / PC 2Ø SET
28	B212	PC 2Ø / PC 21
29	B163	PC 21 CLR / PC 21 SET / PC 22 CLR / PC 22 SET / PC 23 CLR / PC 23 SET
30	B212	PC 22 / PC 23
31	B166	PC 21-23 COUNT
32	B212	PC 24 / PC 25
33	B163	PC 24 CLR / PC 24 SET / PC 25 CLR / PC 25 SET / PC 26 CLR / PC 26 SET
34	B212	PC 26 / PC 27
35	B163	PC 27 CLR / PC 27 SET / PC 28 CLR / PC 28 SET / PC 29 CLR / PC 29 SET
36	Bc12	PC 28 / PC 29
37		
38	B212	PC 3Ø / PC 31
39	B163	PC 3Ø CLR / PC 3Ø SET / PC 31 CLR / PC 31 SET / PC 32 CLR / PC 32 SET
40	B212	PC 32 / PC 33
41	B163	PC 33 CLR / PC 33 SET / PC 34 CLR / PC 34 SET / PC 35 CLR / PC 35 SET
42	B212	PC 34 / FC 35
43	WØØ5	DS9 / DS1Ø / DS11 / DS12 / DS13 / DS14 / DSØ / DS1 / DS2 / DS3 / DS4 / DS5 / DS6 / DS7 / DS8
44	WØØ5	(blank) / (blank) / (blank) / DS24 / DS25 / DS26 / DS27 / DS28 / DS29 / DS3Ø / DS31 / DS32 / DS33 / DS34 / DS35

Revisions

Rev.	Change No.	Chk
PØ1	WIRE LISTED 2/23	
PØ2	REVISED 3/21/67	
PØ3	REVISED 4/19/67	
PØ4	REVISED 4/28/67	

UNLESS OTHERWISE SPECIFIED
DIMENSION IN INCHES
TOLERANCES
DECIMALS ± .005 FRACTIONS ± 1/64 ANGLES ± 0°30'
FINAL SURFACE QUALITY ✓
REMOVE BURRS AND BREAK SHARP CORNERS

MATERIAL
FINISH

DRN. James Brett DATE 1-26-67
CHK'D. DATE
ENG. DATE
PROJ. ENG. DATE
PROD. DATE
FIRST USED ON
SCALE
SHEET OF

digital EQUIPMENT CORPORATION MAYNARD, MASSACHUSETTS

TITLE MODULE UTILIZATION PDP-1Ø PANELS 2E - 2J

SIZE D CODE UML NUMBER 2E-2J REV. PØ4
DIST.

DEC FORM NO.

This drawing and specifications, herein, are the property of Digital Equipment Corporation and shall not be reproduced or copied or used in whole or in part as the basis for the manufacture or sale of items without written permission.

Panel 2K

Slot	Module	Contents
1		
2		
3		
4		
5	B163	FMA 32 / FMA 33 / FMA 32 / FMA 33 / FMA 32 / FMA 33
6	B163	FMA 34 / FMA 35 / FMA 34 / FMA 35 / FMA 34 / FMA 35
7	B133	FMA 32 / FMA 33 / FMA 34 / FMA 35
8	B165	FMA 32 / FMA 33 / FMA 34 / FMA 35
9	B199	ADR DE-CODER
10	B25∅	DATA ∅ THRU 5
11	B25∅	DATA ∅ THRU 5
12	B25∅	DATA 6 THRU 11
13	B25∅	DATA 6 THRU 11
14	B168	FM IN ∅ / FM IN 1 / FM IN 2 / FM IN 3 / FM IN 4 / FM IN 5
15	B25∅	DATA 12 THRU 17
16	B25∅	DATA 12 THRU 17
17	B25∅	DATA 18 THRU 23
18	B25∅	DATA 18 THRU 23
19	B163	FM IN 12 / FM IN 13 / FM IN 14 / FM IN 15 / FM IN 16 / FM IN 17
20	B25∅	DATA 24 THRU 29
21	B25∅	DATA 24 THRU 29
22	B25∅	DATA 3∅ THRU 35
23	B25∅	DATA 3∅ THRU 35
24	B163	FM IN 24 / FM IN 25 / FM IN 26 / FM IN 27 / FM IN 28 / FM IN 29
25	G796	LEVEL TERM
26	B168	MA 18 CLR / MA 18 SET / MA 19 CLR
27	B165	PC 24-3∅ [1] / PC 18-2∅ [1] / MA 18-19 CLR / MA 18 SET / MA 2∅-21 CLR / MA 2∅ SET / MA 22-23 CLR / MA 22 SET
28	W∅1∅	PC 21-23 [1] / PC 24-26 [1] / MA18CLR / MA19CLR / MA19SET / MA2∅CLR / MA21CLR / MA21SET / MA22CLR / MA23CLR / MA23SET / MA24CLR / MA25CLR / MA25SET / MA26CLR
29	B165	PC 24-26 (1) / MA 24-25 CLR / MA 24 SET / MA 26-27 CLR / MA 26 SET / MA 28-29 CLR / MA 28 SET
30		
31		
32		
33	B168	MA 24 CLR / MA 24 SET / MA 25 CLR
34	W∅1∅	PC 27-29 [1] / MA27CLR / MA27SET / MA28CLR / MA29CLR / MA29SET / MA3∅CLR / MA31CLR / MA31SET / MA32CLR / MA33CLR / MA33SET / MA34CLR / MA35CLR / MA35SET
35		
36	B166	PC 27, 28, 29 COUNT
37		
38		
39	B168	MA 3∅ CLR / MA 3∅ SET / MA 31 CLR
40	B165	PC 27-35 [1] / MA 3∅-31 CLR / MA 3∅ SET / MA 3∅ SET / PC 3∅-32 [1] / MA 32-33 CLR / MA 32 SET / MA 34-35 CLR / MA 34 SET
41		
42		
43	B163	MA 32 SET / MA 33 SET / MA 35 SET
44	B133	PC 33-35 [1] / MA 3∅ SET / MA 34 SET

Panel 2L

MEM BUS

Slot	Module	Contents
1		
2		
3		
4		
5	B133	FMA 32 / FMA 32 / MAIB MC REQ CYC
6	B133	FMA 33 / FMA 33 / FMA 34 / FMA 34
7	B165	FMA 33 / FMA 32 / FMA 32 / FMA 32 / FMA 32
8	B611*	FMA FM HI FM AR (J) / FMA FM LO FM AR (J)
9		∅ THRU 15
10		ADR ∅ THRU 7
11		ADR 8 THRU 15
12		ADR ∅ THRU 7
13		ADR 8 THRU 15
14	B163	FM IN 6 / FM IN 7 / FM IN 8 / FM IN 9 / FM IN 1∅ / FM IN 11
15		ADR ∅ THRU 7
16		ADR 8 THRU 15
17		ADR ∅ THRU 7
18		ADR 8 THRU 15
19	B163	FM IN 18 / FM IN 19 / FM IN 2∅ / FM IN 21 / FM IN 22 / FM IN 23
20		ADR ∅ THRU 7
21		ADR 8 THRU 15
22		ADR ∅ THRU 7
23		ADR 8 THRU 15
24	B163	FM IN 3∅ / FM IN 31 / FM IN 32 / FM IN 33 / FM IN 34 / FM IN 35
25	G796	LEVEL TERM
26	B212	MA 18 / MA 19
27	B168	MA 19 SET / MA 2∅ CLR / MA 2∅ SET
28	B212	MA 2∅ / MA 21
29	B168	MA 21 CLR / MA 21 SET / MA 22 CLR
30	B212	MA 22 / MA 23
31	B168	MA 22 SET / MA 23 CLR / MA 23 SET
32	B212	MA 24 / MA 25
33	B168	MA 25 SET / MA 26 CLR / MA 26 SET
34	B212	MA 26 / MA 27
35	B168	MA 27 CLR / MA 27 SET / MA 28 CLR
36	B212	MA 28 / MA 29
37	B168	MA 28 SET / MA 29 CLR / MA 29 SET
38	B212	MA 3∅ / MA 31
39	B168	MA 31 SET / MA 32 CLR / MA 32 SET
40	B212	MA 32 / MA 33
41	B168	MA 33 CLR / MA 33 SET / MA 34 CLR
42	B212	MA 34 / MA 35
43	B168	MA 34 SET / MA 35 CLR / MA 35 SET
44	B135	MA 31 SET / PC 27-35 (1)

Panel 2M

Slot	Module	Contents
1	W∅12	IND / ICSC
2	G799	IBC / PULSE CABLE TO 1M43
3	G796	IBC / LEVEL CABLE TO 1M42
4	G796	IBC / LEVEL CABLE TO 1M41
5	B163	MI ∅ CLR / MI 1 CLR / MI ∅ SET / MI 1 SET / MI 2 CLR / MI 3 CLR
6	B163	MI 2 SET / MI 3 SET / MI 4 CLR / MI 5 CLR / MI 4 SET / MI 5 SET
7	B2∅4	MI ∅ / MI 1 / MI 2 / MI 3
8	B163	MI 6 CLR / MI 7 CLR / MI 6 SET / MI 7 SET / MI 8 CLR / MI 9 CLR
9	B2∅4	MI 4 / MI 5 / MI 6 / MI 7
10	B163	MI 8 SET / MI 9 SET / MI 1∅ CLR / MI 11 CLR / MI 1∅ SET / MI 11 SET
11	B2∅4	MI 8 / MI 9 / MI 1∅ / MI 11
12	B163	MI 12 CLR / MI 13 CLR / MI 12 SET / MI 13 SET / MI 14 CLR / MI 15 CLR
13	B2∅4	MI 12 / MI 13 / MI 14 / MI 15
14	B163	MI 14 SET / MI 15 SET / MI 16 CLR / MI 17 CLR / MI 16 SET / MI 17 SET
15	B2∅4	MI 16 / MI 17 / MI 18 / MI 19
16	B163	MI 18 CLR / MI 19 CLR / MI 18 SET / MI 19 SET / MI 2∅ CLR / MI 21 CLR
17	B2∅4	MI 2∅ / MI 21 / MI 22 / MI 23
18	B163	MI 2∅ SET / MI 21 SET / MI 22 CLR / MI 23 CLR / MI 22 SET / MI 23 SET
19	B2∅4	MI 24 / MI 25 / MI 26 / MI 27
20	B163	MI 24 CLR / MI 25 CLR / MI 24 SET / MI 25 SET / MI 26 CLR / MI 27 CLR
21	B2∅4	MI 28 / MI 29 / MI 3∅ / MI 31
22	B163	MI 26 SET / MI 27 SET / MI 28 CLR / MI 29 CLR / MI 28 SET / MI 29 SET
23	B2∅4	MI 32 / MI 33 / MI 34 / MI 35
24	B163	MI 3∅ CLR / MI 31 CLR / MI 3∅ SET / MI 31 SET / MI 32 CLR / MI 33 CLR
25		
26	B163	MI 32 SET / MI 33 SET / MI 34 CLR / MI 35 CLR / MI 34 SET / MI 35 SET
27	B131*	PRA ILL ADR
28	B131*	PRA 18
29	B131*	PRA 19
30	B131*	PRA 2∅
31	B131*	PRA 21
32	B131*	PRA 22
33	B131*	PRA 23
34	B131*	PRA 24
35	B131*	PRA 25
36	B131*	RLA 18
37	B131*	RLA 19
38	B131*	RLA 2∅
39	B131*	RLA 21
40	B131*	RLA 22
41	B131*	RLA 23
42	B131*	RLA 24
43	B131*	RLA 25
44		

Panel 2N

Slot	Module	Contents
1	W∅12	IND / ICSC
2	W∅12	IND / ICSC
3	G796	IBC / PULSE CABLE TO 1N42
4	G799	IBC / LEVEL CABLE TO 1N41
5	B684	MC REQ CYC / MAI FMC SELECT
6	B684	MAI 18 / -MAI 18
7	B684	MAI 19 / -MAI 19
8	B684	MAI 2∅ / -MAI 2∅
9	B684	MAI 21 / -MAI 21
10	B684	MAI 35 / -MAI 35
11	B684	MAI 22 / MAI 23
12	B684	MAI 24 / MAI 25
13	B684	MAI 26 / MAI 27
14	B684	MAI 28 / MAI 29
15	B684	MAI 3∅ / MAI 31
16	B684	MAI 32 / MAI 33
17	B684	MAI 34 / MAI 35
18	B684	MC RD (1) / MC WR (1)
19	B684	MAI 27 / MAI MM 22
20	B13∅	MAI 18
21	B13∅	MAI 19
22	B13∅	MAI 2∅
23	B13∅	MAI 21
24	B13∅	MAI 22
25	G796	LEVEL TERM
26	B13∅	MAI 23
27	B13∅	MAI 24
28	S2∅3*	PR 18 / PR 19 / PR 2∅
29	B13∅	MAI 25
30	S2∅3*	PR 21 / PR 22 / PR 23
31	B134	MAI 26 / MAI 27 / MAI 28 / MA 18-31 =∅
32	S2∅3	PR 24 / PR 25 / KEY RDI PART 2
33	B134	MAI 29 / MAI 3∅ / MAI 31 / MA 18-31 =∅
34	B133	MAI 32 / MAI 33 / PRA ILL ADR / AS = RLA
35	B133	MAI 34 / PRA CRY / MAI 35 / MAI 35 / MAI 35
36	B163	MAI 32 / MAI 33 / MAI 34 / MAI 35
37	B165	PRA ILL ADR / AS = RLA
38	S2∅3*	RL 18 / RL 19 / RL 2∅
39	B134	MA 18-31 =∅ / MA 18-31 =∅ / MAI 34 / MA 18-31 =∅ / PRA ILL ADR / MA 18-31 =∅
40	S2∅3*	RL 21 / RL 22 / RL 23
41		
42	S2∅3*	RL 24 / RL 25
43	B165	MA 18-31 =∅ / RLA 25 / MA 18-31 =∅ / RLA 18 / MA 18-31 =∅
44		

Revisions

REV.	CHANGE NO.	CHK
P∅1	WIRE LISTED 2/23	
P∅2	REVISED 3/2/67	
P∅3	REVISED 4/5/67	
P∅4	REVISED 4/19/67	
P∅5	REVISED 4/28/67	
P∅6	REVISED 5/13/67	

UNLESS OTHERWISE SPECIFIED
UNLESS OTHERWISE SPECIFIED DIMENSION IN INCHES
TOLERANCES: DECIMALS ± .005; FRACTIONS ± 1/64; ANGLES ± 0°30'
FINAL SURFACE QUALITY ✓
REMOVE BURRS AND BREAK SHARP CORNERS
MATERIAL
FINISH

DRN. (signature) DATE 1-30-67
CHK'D. DATE
ENG. DATE
PROJ. ENG. DATE
PROD. DATE
FIRST USED ON
SCALE
SHEET OF

digital EQUIPMENT CORPORATION, MAYNARD, MASSACHUSETTS

TITLE: MODULE UTILIZATION PDP-1∅ PANELS 2K→2N

SIZE D | CODE UML | NUMBER 2K-2N | REV. P∅6

DIST.

DEC FORM NO

This drawing and specifications, herein, are the property of Digital Equipment Corporation and shall not be reproduced or copied or used in whole or in part as the basis for the manufacture or sale of items without written permission.

	1	2	3	4	5	6	7	8	9	10	11	12	13	14	15	16	17	18	19	20	21	22	23	24	25	26	27	28	29	30	31	32	33	34	35	36	37	38	39	40	41	42	43	44	
	W012	G796	G799	G796			B204	B163	B204	B163	B204	G700	B204	B163	B204	B163	B204	G796	B204	B163	B204	B163	B204	B130	G700	B130	B134	B137	B141	B141	W010	B141	B141	B141	B137	W005	W012	W012	W012	W012	W012	W012	W012	W012	W012	
2P	IND IC SC	IBC PULSE CABLE TO 1P43	IBC LEVEL CABLE TO 1P42	IBC LEVEL CABLE TO 1P41			PB Ø PB 1 PB 2 PB 3	PB Ø SET PB 1 SET PB 2 SET PB 3 SET PB 4 SET PB 5 SET	PB 4 PB 5 PB 6 PB 7	PB 6 SET PB 7 SET PB 8 SET PB 9 SET PB 1Ø SET PB 11 SET	PB 8 PB 9 PB 1Ø PB 11	PULSE TERM	PB 12 PB 13 PB 14 PB 15	PB 12 SET PB 13 SET PB 14 SET PB 15 SET PB 16 SET PB 17 SET	PB 16 PB 17 PB 18 PB 19	PB 18 SET PB 19 SET PB 2Ø SET PB 21 SET PB 22 SET PB 23 SET	PB 2Ø PB 21 PB 22 PB 23	LEVEL TERM	PB 24 PB 25 PB 26 PB 27	PB 24 SET PB 25 SET PB 26 SET PB 27 SET PB 28 SET PB 29 SET	PB 28 PB 29 PB 3Ø PB 31	PB 3Ø SET PB 31 SET PB 32 SET PB 33 SET PB 34 SET PB 35 SET	PB 32 PB 33 PB 34 PB 35	AS = FMA	PULSE TERM	AS = FMA	AS = FMA MAI FMC SELECT AS = FMA	AS = FMA AS = FMA	AS = RLA	AS = RLA	AS = RLA	AS = RLA	AS = RLA	AS = RLA AS = RLA AS = RLA AS = RLA AS = RLA AS = RLA AS = RLA AS = FMA AS = FMA AS 18 AS 19 AS 2Ø	AS = RLA	AS = RLA	AS = RLA	AS = RLA	AS = RLA	AS 21 AS 22 AS 23 AS 24 AS 25 AS 26 AS 27 AS 28 AS 29 AS 3Ø AS 31 AS 32 AS 33 AS 34 AS 35	RUN PI ACT PWR ON MC STOP EX USER KEY PROG STOP	PC 18 THRU 23	PC 24 THRU 35	PIH 1 THRU 7 PIR 1 THRU 4	IR Ø THRU 11	IR 12 THRU 17 MA 18 THRU 23	MA 24 THRU 35	PIO 1 THRU 7 PIR 5 THRU 7	2P
2R	W012 IND ICSC		G799 IBC PULSE CABLE TO 1R42	G796 IBC LEVEL CABLE TO 1R41		B130 PN Ø THRU 2	B130 PN 3 THRU 5	B130 PN 6 THRU 8	B130 PN Ø THRU 8	B130 PN 9 THRU 11	B130 PN 12 THRU 14	B130 PN 15 THRU 17	B130 PN 9 THRU 17	B130 PN Ø THRU 26	B130 PN PAR ODD EVEN	B130 PN 18 THRU 26	B130 PN 18 THRU 2Ø	B130 PN 21 THRU 23	B130 PN 24 THRU 26	B130 PN 27 THRU 35	B130 PN 27 THRU 29	B130 PN 3Ø THRU 32	B130 PN 33 THRU 35	B130 KEY SYNC SET RUN SET RUN SET KEY RIM SET	B165 KEY SYNC CLR KEY SYNC RQ CLR RUN CLR KEY RIM CLR KEY MR START	B212 KEY SYNC KEY SYNC RQ	B135 RUN SET KEY SYNC RQ SET KEY RDI DONE	B212 RUN KEY RIM		B212 KEY F1 KEY PI INH		S1Ø7 PWR ON IND KEY SING INST IOB FM AR A IOB FM AR B IOB FM AR C		S1Ø7 AS 18 AS 19 AS 2Ø AS 21 AS 22 AS 23 AS 24	S1Ø7 AS 25 AS 26 AS 27 AS 28 AS 29 AS 3Ø AS 31	S1Ø7 AS 32 AS 33 AS 34 AS 35 PI SEL PI STATUS A PI STATUS B	W033 DS Ø THRU 11	W033 DS 15 THRU 29	W033 AS 33 THRU 35 DS 3Ø THRU 35	G796 SC MAINT SW FM EN SW MI PROG DIS SW RDI SEL 3 THRU 9	W012 MI Ø THRU 11	W012 MI 12 THRU 23	W012 MI 24 THRU 35	W012 IOB Ø THRU 11	2R
2S	W012 IND ICSC		G799 IBC PULSE CABLE TO 1S42	G796 IBC LEVEL CABLE TO 1S41		B163 PIH 1 CLR PIH 2 CLR PIH 1 SET PIH 2 SET PIH 3 CLR PIH 4 CLR	B212 PIH 1 PIH 2	B163 PIH 3 SET PIH 4 SET PIH 5 CLR PIH 6 CLR PIH 5 SET PIH 6 SET	B212 PIH 3 PIH 4	B133 PIH 7 CLR PIH 7 SET PIR 1 SET PI RQ	B212 PIH 5 PIH 6	B165 PIR 1 CLR PIR 2 CLR PIR 3 CLR PI REQ 5 PI REQ 6	B212 PIH 7 PIR 1	B135 PIR 1 SET PIR 2 SET PIR 3 SET	B212 PIR 2 PIR 3	B165 PIR 4 CLR PIR 5 CLR PIR 6 CLR PIR 7 CLR PI REQ 7	B212 PIR 4 PIR 5	B163 PIR 2 SET PIR 3 SET PIR 4 SET PIR 5 SET PIR 6 SET PIR 7 SET	B212 PIR 6 PIR 7	B135 PIR 4 SET PIR 5 SET PIR 6 SET PIR 7 SET	B135 KNT 1 KT1		B611 KNT 1 KEY PI INH SET KNT 2 KEY IT Ø EN	B311 KNT 2	B311 KNT 3	B611 KNT 3 KEY RUN CLR KT3A KEY MID INST STOP	G700 PULSE TERM KT3A	B611 KEY RDI DONE KEY F1 SET KEY RUN CLR KEY RUN CLR	B134 KEY PROG STOP KEY DONE KEY DONE KT4		B165 KEY F1 CLR KEY PROG STOP KEY IT Ø EN KEY MID INST STOP KEY RUN CLR B611 KT4 KCT Ø KCT Ø KCT Ø CPA PDV OV SET	B163 IOB Ø IOB 1 IOB 2 IOB 3 IOB 4 IOB 5 B137 KEY DONE	B163 IOB 6 IOB 7 IOB 8 IOB 9 IOB 1Ø IOB 11 B165 KEY CLR KT4 CPA MEM PROT FLAG SET CPA NON EX MEM SET CPA PAR ERR SET	B163 IOB 12 IOB 13 IOB 14 IOB 15 IOB 16 IOB 17 R613 KEY DONE CPA MEM PROT FLAG SET	B163 IOB 18 IOB 19 IOB 2Ø IOB 21 IOB 22 IOB 23 B135 KEY DONE CPA PDL OV SET CPA PDV OV SET	B163 IOB 24 IOB 25 IOB 26 IOB 27 IOB 28 IOB 29 B133 IOT DATA I/O KT1 KEY DONE CPA PDL OV SET KEY DONE	B163 IOB 3Ø IOB 31 IOB 32 IOB 33 IOB 34 IOB 35 R613 CPA NON EX MEM SET CPA PAR ERR SET CPA PDL OV SET	G796 AS 18 THRU 32 RUN(1), RUN(Ø) KEY RESET CONT (Ø & 1) IOB ◇ 28 THRU 35	G796 KEY SING INST START (1) EXE(1) SYNC OPS KT1 EN IOB ◆ 28 THRU 35 IOB ◇ 14 THRU 27	G796 IOB ◆ 14 THRU 27 IOB ◇ Ø THRU 13	G796 IOB ◆ Ø THRU 13 KEY ADR BRK ADR INST ADR RD 4WR STOP (◇ & ◆) ADR WR AS STROBE EN CING CYCLE DEPVDEA NXTVEXE DEPVNXT EXVNXT NXM STOP (◇ & ◆) PAR STOP	G796 IR 1Ø THRU 12 IOB FM AR PI STATUS A & B ACT(1)	G796 PIH 1 THRU 7 PIO 1 THRU 7	G796 IR 3 THRU 9	W012 IOB 12 THRU 23	W012 IOB 24 THRU 35	2S
2T	W012 IND ICSC	G799 IBC PULSE CABLE TO 1T43				B165 PI REQ 1 PI OK 2 PI REQ 2 PI OK 3 PI REQ 3	B135 PI OK 2 PI OK 3 PI OK 4	B134 PI REQ 1 PI REQ 2 PI REQ 3 PI REQ 4	B135 PI OK 5 PI OK 6 PI OK 7	B134 PI RQ PI REQ 5 PI REQ 6 PI REQ 7	B165 PI RESET B1 PI RESET B2 PI RESET B3 PI RESET B4 PI RQ	B134 PI ENC 34 PI ENC 33 PI ENC 32 PI ENC 32	S202 PIO 1 PIO 2	B134 PI ENC 33 PI ENC 34 PI RQ PI RQ	S202 PIO 3 PIO 4	B165 PI ENC 32 PI ENC 33 PI ENC 34 PI RQ PI RQ	S202 PIO 5 PIO 6		S202 PIO 7 PI ACT	B611 KT1 KT1 KT Ø A PI STATUS	B311 KT1	B311 KT1	B311 KT4	B311 KT2	B611 KT2 KT4 KT3 KT4	B311 KT3	B311 KT4	B311 KT3A			B611 KT4 KCT Ø KCT Ø KCT Ø CPA PDV OV SET	B137 KEY DONE	B165 KEY CLR KT4 CPA MEM PROT FLAG SET CPA NON EX MEM SET CPA PAR ERR SET	R613 KEY DONE CPA MEM PROT FLAG SET	B135 KEY DONE CPA PDL OV SET CPA PDV OV SET	B133 IOT DATA I/O KT1 KEY DONE KEY DONE	R613 CPA NON EX MEM SET CPA PAR ERR SET CPA PDL OV SET	G796 RUN(1), RUN(Ø) KEY RESET CONT (Ø & 1) IOB ◇ 28 THRU 35	G796 IOB ◇ 14 THRU 27	G796 IOB ◇ Ø THRU 13	G796 KEY ADR BRK ADR INST ADR RD 4WR STOP (◇ & ◆) ADR WR AS STROBE EN CING CYCLE DEPVDEA NXTVEXE DEPVNXT EXVNXT NXM STOP (◇ & ◆) PAR STOP	G796 PIH 1 THRU 7 PIO 1 THRU 7	G799 KEY DONE KT Ø KST 1 KST 2 PI COND SET CPA MEM PROT FLAG SET NON EX MEM SET PAR ERR SET PDL OV SET			2T

REV	CHANGE NO	CHK
P01	WIRE LISTED 2/23	
P02	REVISED 3/9/67	
P03	REVISED 3/31/67	
P04	REVISED 3/28/67	
P05	REVISED 4/3/67	
P06	REVISED 4/14/67	
P07	REVISED 4/28/67	

REVISIONS

UNLESS OTHERWISE SPECIFIED
DIMENSIONS IN INCHES
TOLERANCES
DECIMALS ± .005 FRACTIONS ± 1/64 ANGLES 0°30'
FINAL SURFACE QUALITY
REMOVE BURRS AND BREAK SHARP CORNERS

MATERIAL

FINISH

DRN [illegible] DATE 1-1-67
CHK'D [illegible] DATE
ENG. DATE
PROJ ENG. DATE
PROD DATE
FIRST USED ON
SCALE
SHEET OF

digital EQUIPMENT CORPORATION
MAYNARD MASSACHUSETTS

TITLE
MODULE UTILIZATION
PDP-1Ø
PANELS 2P → 2T

SIZE D CODE UML NUMBER 2P-2T REV P07
DIST.

DEC FORM NO

This drawing and specifications, herein, are the property of Digital Equipment Corporation and shall not be reproduced or copied or used in whole or in part as the basis for the manufacture or sale of items without written permission.

MODULE UTILIZATION PDP-1Ø PANELS 3A → 3D

3A

Slot	Module	Signals
1	G796	KEY REPEAT BYPASS SPEED CONT.
2	WØ12	PTR ENB PWR EOT BIN BUSY DONE CNT Ø CNT 1 CNT 2 PIA 33 PIA 34 PIA 35
3	WØ12	PTR Ø THRU 11
4	WØ12	PTR 12 THRU 23
5	WØ12	PTR 24 THRU 35
6		PAPER TAPE PUNCH
7		PAPER TAPE READER
8	W52Ø	PTP SYNC
9	WØ4Ø	PTP 8 / PTP 7
10	WØ4Ø	PTP 6 / PTP 5
11	WØ4Ø	PTP 4 / PTP FEED HOLE
12	WØ4Ø	PTP 3 / PTP 2
13	WØ4Ø	PTP 1 / TTY SEND LINE
14	S2Ø3	PTP HOLE 8 / PTP HOLE 7 / PTP HOLE 6
15	S2Ø3	PTP HOLE 5 / PTP HOLE 4 / PTP HOLE 3
16	S2Ø3	PTP HOLE 2 / PTP HOLE 1
17	R613	PTP DATAO CLR / PTP DATAO CLR / PTP DATAO SET
18	R613	PTP CONO CLR / PTP CONO SET / PTP DONE PULSE
19	S2Ø5	PTP BIN
20	R2Ø1	PTP BUSY
21	R2Ø1	PTP DONE
22	S2Ø3	PTP PIA 33 34 35
23	S1Ø7	PTP 1-8 / PTP 5-8 / PTP 1-4 / PTP SPEED / PTP SPEED / PTP SPEED / PTP SPEED
24	S111	PTP 1-8 / PTP 1-8 / PTP 8
25	R3Ø2	PTP 1-8 / PTP SPEED
26	R3Ø3	PTP SCR
27	R3Ø3	KEY REPT
28	S111	PTP SPEED / PTP SCR DRIVER / PTP DATAO CLR
29	R613	PTR NO TAPE PULSE / PTR STROBE / PTR STROBE A
30	S1Ø7	PTR HOLE 1 / PTR HOLE 2 / PTR HOLE 3 / PTR HOLE 4 / PTR HOLE 5 / PTR HOLE 6 / PTR HOLE 7
31	S1Ø7	PTR HOLE 8 / PTR A / PTR A / PTR B / PTR B / PTR POWER / PTR SHUT DOWN
32	R4Ø1	PTR CLK
33	G9Ø3	PTR CLK
34	R3Ø2	PTR SHUT DOWN / PTR CLK DLY
35	R613	PTR MOTOR SHIFT / PTR OUT OF TAPE / PTR CLR
36	S2Ø2	PTR A / PTR B
37	S2Ø2	PTR ENABLE / PTR POWER
38	S111	PTR ENABLE / PTR CNT Ø / PTR RUN
39	S2Ø2	PTR CNT Ø / PTR CNT 1
40	S2Ø2	PTR CNT 2
41	S111	PTR OUT OF TAPE / PTR STROBE ENABLE / PTR STROBE ENABLE
42	S111	PTR 28 SET / PTR 29 SET / PTR DATA PHASE
43	S111	PTR 28 CLR / PTR 29 CLR / PTR DATA PHASE
44	S1Ø7	PTR LAST / PTR LAST / PTR LAST / PTR LAST / PTR LAST / PTR DATA PHASE

3B

Slot	Module	Signals
1	WØ33	KEY SING INST SING CYC PAR STOP NXM STOP REPEAT SW ADR INST ADR RD ADR WR ADR STOP ADR BRK
2	WØ33	KEY RDI SW STA SW CONT SW STOP SW RESET SW EXE SW EXA SW EX NXT DEP SW DEP NXT
3	WØ12	TTY TTI 5 TTI 4 TTI 3 TTI 2 TTI 1 TTI BUSY TTI FLAG TTO BUSY TTO FLAG PIA 33 PIA 34 PIA 35
4	WØ12	CPA FOV AR OV EN PIA 33 PIA 34 PIA 35 TTY TEST TTI ACT TTO ACT TTI 8 TTI 7 TTI 6
5	WØ12	PTP 5 PTP 4 PTP 3 PTP 2 PTP 1 NO TAPE BIN BUSY DONE PAI 33 PAI 34 PAI 35
6	WØ12	CPA PWR FAIL ADR BRK PAR ERR PAR EN PDL OV MEM PROT FLAG NON EX MEM CLK EN CLK FLAG PTP 8 PTP 7 PTP 6
7	WØ12	KEY F1 SYNC RQ SYNC RESET EXAM EX NXT DEP DEP NXT RDI START EXE CONT
8	S1Ø7	KEY ADR INST / KEY ADR RD / KEY ADR WR / KEY ADR STOP / KEY ADR BRK / KEY PAR STOP / KEY NXM STOP
9	WØØ5	K STOP SW / K EXA SW / K EX NXT SW / K DEP SW / K DP NXT SW / K RESET SW / K EXE SW / K STA SW / K RDI SW / K CONT SW / K REP BY SW / K SING CYC / K ADR INST / K ADR RD / K ADR WR
10	S2Ø3	KEY EXAMINE / KEY EX NXT / KEY DEPOSIT
11	S2Ø3	KEY DEP NXT / KEY RESET / KEY EXECUTE
12	S2Ø3	KEY START / KEY RDI / KEY CONT.
13	RØØ2	KEY MANUAL / KEY FCN CLR
14	S111	KEY MANUAL / KEY FCN CLR / KEY FCN CLR
15	W5Ø4	KEY MANUAL
16	R3Ø2	KEY FCN STROBE / KTØ
17	R613	KEY FCN STROBE / KEY REPT / KEY CONT CLR
18	R6Ø1	KEY FCN CLR
19	R6Ø2	KTØ / KST 2
20	R2Ø1	KEY REPT SYNC
21	B137	KT1 EN / KEY MEM REF
22	B135	KEY SYNC OPS / KEY DEP / DEP NXT V EXE / KEY AS STROBE EN
23	B133	KEY DEP V DEP NXT / KEY EX V EXE NXT / KEY NEXT
24	W5Ø1	KEY REPEAT SWITCH
25		
26		DRIVER (5 SEC)
27		DLY (VAR.)
28	S111	PTP SYNC / PTP TAPE FEED / PTP DONE PULSE
29		
30	R613	PTR CONO CLR / PTR CONO SET / IOT RDI PULSE
31	S2Ø5	PTR EOT / PTR BIN
32	R22Ø	PTR 18 / PTR 24 / PTR 3Ø
33	R22Ø	PTR Ø / PTR 6 / PTR 12
34	R22Ø	PTR 19 / PTR 25 / PTR 31
35	R22Ø	PTR 1 / PTR 7 / PTR 13
36	R22Ø	PTR 2Ø / PTR 26 / PTR 32
37	R22Ø	PTR 2 / PTR 8 / PTR 14
38	R22Ø	PTR 21 / PTR 27 / PTR 33
39	R22Ø	PTR 3 / PTR 9 / PTR 15
40	S2Ø2	PTR 34 / PTR 35
41	S2Ø5	PTR 28 / PTR 29
42	S2Ø2	PTR 22 / PTR 23
43	R22Ø	PTR 4 / PTR 1Ø / PTR 16
44	R22Ø	PTR 5 / PTR 11 / PTR 17

3C

Slot	Module	Signals
1	G796	IOB (◇) Ø THRU 13
2	G796	IOB (◇) 14 THRU 27
3	G796	RUN(1) RUN(Ø) KEY RESET (1) CONT (1) CONT (Ø) IOB (◇) 28 THRU 35
4		
5		1A IOB Ø THRU 8
6		2A IOB 18 THRU 26
7		3A IOB RESET -15V PWR ON IOB DR SPLIT IOS 3,4&5
8		4A DATAO CONO DATAI CONI RDI
9	W5Ø4	KST 1
10	R3Ø2	KEY RDI DLY / IOB RDI DATA
11	WØØ5	K MEM REF / PTP NO TAPE / K SING INST. / K ADR STOP / K ADR BRK / K PAR STOP / K NXM STOP / IOB Ø / IOB 1 / IOB 2 / IOB 3 / IOB 4 / IOB 5 / IOB 6 / IOB 7
12	S1Ø7	IOB Ø / IOB 1 / IOB 2 / IOB 3 / IOB 4 / IOB 5 / IOB 6
13	S1Ø7	IOB 14 / IOB 15 / IOB 16 / IOB 17 / IOB 19 / IOB 2Ø / IOB 21
14	S1Ø7	IOB 22 / IOB 23 / IOB 24 / IOB 25 / IOB 26 / IOB 27 / IOB 28
15	RØØ1*	PTP HOLE 7 / IOB Ø / IOB 1 / IOB 2 / IOB 3 / IOB 4 / IOB 5
16	WØØ5*	IOB Ø / IOB 1 / IOB 2 / IOB 3 / IOB 4 / IOB 5 / IOB 6 / IOB 7 / IOB 8 / IOB 9 / IOB 1Ø / IOB 11 / IOB 12 / IOB 13 / IOB 14
17	B165*	IOB Ø / IOB 1 / IOB 2 / IOB 3 / IOB 4
18	RØØ1*	IOB 12 / IOB 13 / IOB 14 / IOB 15 / IOB 16 / IOB 17
19	B165*	IOB 1Ø / IOB 11 / IOB 12 / IOB 13 / IOB 14
20	RØØ1*	IOB 24 / IOB 25 / IOB 26 / IOB 27 / IOB 28 / IOB 29
21	WØØ5*	IOB 15 / IOB 16 / IOB 17 / IOB 18 / IOB 19 / IOB 2Ø / IOB 21 / IOB 22 / IOB 23 / IOB 24 / IOB 25 / IOB 26 / IOB 27 / IOB 28 / IOB 29
22	B165*	IOB 2Ø / IOB 21 / IOB 22 / IOB 23 / IOB 24
23	B165*	IOB 3Ø / IOB 31 / IOB 32 / IOB 33 / IOB 34
24	WØØ5*	IOB 3Ø / IOB 31 / IOB 32 / IOB 33 / IOB 34 / IOB 35
25	S1Ø7	KEY REPEAT SW / IOT RDI PULSE / PTR PWR SW / PTR STATUS / PTR STATUS / PTP STATUS / PTP STATUS
26	W5Ø4	PTR PWR SW
27		
28		
29		
30		
31	R2Ø1	PTR BUSY
32	R2Ø1	PTR DONE
33	S2Ø3	PTR PIA 33 34 35
34	W6Ø[illegible]	TTY SEND EIA
35	W51Ø	TTY RCV EIA
36	W5Ø1	TTY RCV LINE
37	R22Ø	TTI 3 / TTI 2 / TTI 1
38	R22Ø	TTI 6 / TTI 5 / TTI 4
39	R22Ø	TTI STOP / TTI 8 / TTI 7
40	S2Ø2	TTO LINE / TTI ACTIVE
41	R22Ø	TTO 8 / TTO 7 / TTO 6
42	R22Ø	TTO 5 / TTO 4 / TTO 3
43	R22Ø	TTO 2 / TTO 1 / TTO STOP
44	S2Ø2	TTO ENB / TTO ACTIVE

3D

Slot	Module	Signals
1	G796	IOB (◆) Ø THRU 13
2	G796	IOB (◆) 14 THRU 27
3	G796	KEY SING INST START (1) STOP SW EXE (1) KT1 EN IOB (◆) 28 THRU 35
4		
5		1B IOB 9 THRU 17
6		2B IOB 27 THRU 35
7		3B IOS 5 THRU 9
8		4B PI 1 THRU 7
9	S111	KEY RDI DLY / KST 1 / KEY AT INH
10	R3Ø2	KEY AT INH / KEY AT INH
11	WØØ5	IOB 15 / IOB 16 / IOB 17 / IOB 18 / IOB 19 / IOB 2Ø / IOB 21 / IOB 22 / IOB 23 / IOB 24 / IOB 25 / IOB 26 / IOB 27 / IOB 28 / IOB 29
12	WØØ5	IOB 8 / IOB 9 / IOB 1Ø / IOB 11 / IOB 12 / IOB 13 / IOB 14 / IOB 3Ø / IOB 31 / IOB 32 / IOB 33 / IOB 34 / IOB 35
13	S1Ø7	IOB 7 / IOB 8 / IOB 9 / IOB 1Ø / IOB 11 / IOB 12 / IOB 13
14	S1Ø7	IOB 29 / IOB 3Ø / IOB 31 / IOB 32 / IOB 33 / IOB 34 / IOB 35
15	RØØ1*	IOB 6 / IOB 7 / IOB 8 / IOB 9 / IOB 1Ø / IOB 11
16	WØ1Ø*	IOB Ø / IOB 1 / IOB 2 / IOB 3 / IOB 4 / IOB 5 / IOB 6 / IOB 7 / IOB 8 / IOB 9 / IOB 1Ø / IOB 11 / IOB 12 / IOB 13 / IOB 14
17	B165*	IOB 5 / IOB 6 / IOB 7 / IOB 8 / IOB 9
18	RØØ1*	IOB 18 / IOB 19 / IOB 2Ø / IOB 21 / IOB 22 / IOB 23
19	B165*	IOB 15 / IOB 16 / IOB 17 / IOB 18 / IOB 19
20	RØØ1	IOB 3Ø / IOB 31 / IOB 32 / IOB 33 / IOB 34 / IOB 35
21	WØ1Ø*	IOB 15 / IOB 16 / IOB 17 / IOB 18 / IOB 19 / IOB 2Ø / IOB 21 / IOB 22 / IOB 23 / IOB 24 / IOB 25 / IOB 26 / IOB 27 / IOB 28 / IOB 29
22	B165	IOB 25 / IOB 26 / IOB 27 / IOB 28 / IOB 29
23	B165	IOB 35 / KT1 EN / PTR PWR SW / IOB RDI DATA
24	WØ1Ø	IOB 3Ø / IOB 31 / IOB 32 / IOB 33 / IOB 34 / IOB 35 / IOB DR SPLIT / IOB RDI DATA / PI RQ 1 / PI RQ 2 / PI RQ 3 / PI RQ 4 / PI RQ 5 / PI RQ 6 / PI RQ 7
25	B165*	IOB BUS RESET D / IOB BUS RESET C / IOB BUS RESET B / IOB BUS RESET A / IOB BUS RESET
26	S111	IOB BUS RESET / IOB RDI DATA / TTY 1Ø UNIT SW / IOT TØ
27	B141	IOBI 28
28	B141	IOBI 29
29	B141	IOBI 3Ø
30	B141	IOBI 31
31	B141	IOBI 32
32	B141	IOBI 33
33	B141	IOBI 34
34	B141	IOBI 35
35	R613	TTY DATAO SET / TTY CONO CLR / TTY CONO SET
36	R2Ø1	TTI BUSY
37	R2Ø1	TTI FLAG
38	R2Ø1	TTO BUSY
39	R2Ø1	TTO FLAG
40	W99Ø	TTY SWITCH
41	S111	TTI INPUT / TTI INPUT / TTY EIA SW / TTI INPUT / TTY LINE SW
42	S111	TTI ACTIVE / TTY RCV LINE / TTO EMPTY / TTO EMPTY
43	R451	TTI CLK / TTI SHIFT / TTO CLK
44	R613	TTO LINE SET / TTO SHIFT / TTI CLK

REVISIONS

REV.	CHANGE NO.	CHK
PØ1	WIRE LISTED	
PØ2	REVISED 3/18/67	
PØ3	REVISED 3/19/67	
PØ4	REVISED 3/21/67	
PØ5	REVISED 4/3/67	
PØ6	REVISED 4/11/67	
PØ7	REVISED 4/17/67	

UNLESS OTHERWISE SPECIFIED
DIMENSION IN INCHES
TOLERANCES
DECIMALS ± .005 FRACTIONS ± 1/64 ANGLES ± 0°30'
FINAL SURFACE QUALITY
REMOVE BURRS AND BREAK SHARP CORNERS

MATERIAL
FINISH

DRN. A. Kl[illegible] DATE 1-31-67
CHK'D. DATE
ENG. DATE
PROJ. ENG. DATE
PROD. DATE
FIRST USED ON
SCALE
SHEET OF

digital EQUIPMENT CORPORATION MAYNARD, MASSACHUSETTS

TITLE MODULE UTILIZATION PDP-1Ø PANELS 3A → 3D

SIZE D CODE UML NUMBER 3A→3D REV PØ7

DIST.

DEC FORM NO

… specifications, herein, are the prop… Equipment Corporation and shall not be …d or copied or used in whole or in part as … basis for the manufacture or sale of items without written permission.

Slot	3E module	3E signals	3F module	3F signals
1	G799	KEY DONE KTØ PI CONO SET CPA MEM PROT FLAG SET NON EX MEM SET PAR ERR SET PDL OV SET	G796	IR 3 THRU 9 (Ø¢1)
2	G796	PIH 1 THRU 7 PIO 1 THRU 7	G796	IR 1Ø THRU 12 (Ø¢1) IOB FM AR AR ⊕ V FLAG(1) AR FOV PI STATUS (A+B) ACT(1)
3	G796	KEY F1(1) SYNC RQ(1) SYNC(1) MEM REF NEXT RDI(1) IOB PI RQ 1 THRU 7 IQT BLK (◆)	G799	IOT T3B T4 T5 CDA CONO SET MR PWR CLR R MR START R
4	G796	KEY ADR BRK ADR INST ADR RD ADR STOP (◇+◆) ADR WR AS STROBE SING CYCLE DEP V DEP NXT V EXE DEP V NXT EX V NXT NXM STOP (◇+◆) PAR STOP		
5	G796	MR PWR CLR ENB (◇+◆) IOT CONO SET CONO CLR DATAO SET DATAO CLR IOB DATA I A STATUS A DR SPLIT RDI DATA EX IOT USER(1) CPA PWR DLY BIO CPA SEL PI SEL	WØ28	CPA PWR CLK
6	G796	IOT BLK ◇ CONI CONO CONSO CONSX (◆+◇) CONS Z DATA I DATA O GO (1) IR IOT KEY AT INH MC ADR BRK SET		
7	WØ12	IOB PI RQ 1 THRU 7		
8	B684*	IOB STATUS IOB DATA I		
9	S1Ø7	IOB 18 IOB FM AR (1) A IOB FM AR (1) B IOB FM AR (1) C IOB DATA I A IOB STATUS A	S1Ø7	KEY STOP SW KST 2 PTP 8 PTP NO TAPE KST 1
10	B684*	IOS 3(Ø) IOS 3(1)	R6Ø2	KST 1 KEY AT INH
11	B684*	IOS 4(Ø) IOS 4(1)	B156	IOT BLKI BLKO DATA I DATAO IOT BLKI IOT BLKO IOT DATA I IOT DATAO
12	B684*	IOS 5(Ø) IOS 5(1)	B156	IOT CONO CONI CONS Z CONSO IOT CONO IOT CONI IOT CONS Z IOT CONSO
13	B684*	IOS 6(Ø) IOS 6(1)	B156	BIO XXX SEL BIO CPA SEL BIO PI SEL BIO PTP SEL BIO PTR SEL
14	B684*	IOS 7(Ø) IOS 7(1)	RØØ2	BIO TTY SEL
15	B684*	IOS 8(Ø) IOS 8(1)	S111	PTR DATA I BIO TTY SEL
16	B684*	IOS 9(Ø) IOS 9(1)	S1Ø7	PTR DATA I A PTR DATA I B PTR DATA I C BIO PTR SEL BIO CPA SEL BIO TTY SEL
17	S1Ø7	IOB PI RQ 1 IOB PI RQ 2 IOB PI RQ 3 IOB PI RQ 4 IOB PI RQ 5 IOB PI RQ 6 IOB PI RQ 7	R613	CPA CONO SET
18	RØØ1	IOB PI RQ 1 IOB PI RQ 2 IOB PI RQ 3 IOB PI RQ 4 IOB PI RQ 5 IOB PI RQ 6 IOB PI RQ 7		
19				
20	S111	IOB FM AR (1) IOB STATUS A		
21	B684*	IOB DATAO CLR IOB DATAO SET		
22	B684*	IOB CONO CLR IOB CONO SET	B611	IOT T3B
23	B684*	IOB RDI PULSE IOB RESET	B611	IOT T4 IOBI 27 IOT T4 IQT T5
24	B163	IOBI Ø IOBI 1 IOBI 2 IOBI 3 IOBI 4 IOBI 5	B311	IOT T5
25	B163	IOBI 6 IOBI 7 IOBI 8 IOBI 9 IOBI 10 IOBI 11	S1Ø7	IOT DATAO CLR IOT DATAO SET IOT CONO CLR IOT CONO SET IOT RESET IOT CONS Z IOT CONSO
26	B163	IOBI 12 IOBI 13 IOBI 14 IOBI 15 IOBI 16 IOBI 17	R6Ø2	IOT DATAO CLR IOT TØ
27	B163	IOBI 18 IOBI 19 IOBI 18 IOBI 19 IOBI 18 IOBI 19	R6Ø2	IOT DATAO SET IOT T2
28	B163	IOBI 2Ø IOBI 21 IOBI 2Ø IOBI 21 IOBI 2Ø IOBI 21	R6Ø2	IOT CONO CLR IOT T3
29	B163	IOBI 22 IOBI 23 IOBI 22 IOBI 23 IOBI 22 IOBI 23	R6Ø2	IOT CONO SET PTR PWR PULSE
30	B163	IOBI 24 IOBI 25 IOBI 24 IOBI 25 IOBI 24 IOBI 25	R6Ø2	IOT RESET TTY RESET
31	B163	IOBI 26 IOBI 27 IOBI 26 IOBI 27 IOBI 26 IOBI 27		
32	R152	PTP PI	R3Ø2	IOT T2 DLY IOT RESTART DLY
33	R152	PTR PI	R3Ø2	IOT T4 DLY IOT RESET DLY
34	R152	TTY PI	S1Ø7	IOT RESTART DLY IOT DATA DLY IOT RESET DLY CPA CONO SET IOT CONSX IOT BLK IOT DATA XFER
35	R152	CPA PI	S111	IOT CONSX IOT BLK
36	S111	TTY PI EN TTY PI EN CPA STATUS	S111	IOT OUT-GOING IOT DATA XFER
37	B165	PTP PI EN PTR PI EN CPA PI EN CPA PI EN	W5Ø1	CPA PWR CLK
38	R3Ø3	CPA		PWR DLY (30NS)
39	S1Ø7	TTI INPUT TTI SHIFT TTY STATUS TTY DATA I CPA STATUS A CPA STATUS B	R141	CPA PI EN
40	S2Ø3	TTY PIA 33 TTY PIA 34 TTY PIA 35.	S2Ø2	CPA PWR FAIL CPA ADR BREAK
41	S2Ø3	TTY TEST	S2Ø2	CPA PAR ERR CPA PAR ENB
42	S111	TTY STATUS TTY DATA I	S2Ø2	CPA PDL OV CPA MEM PROT FLAG
43	S2Ø2	CPA AR OV EN CPA PIA 33	S2Ø2	CPA NON EX MEM CPA CLK EN
44	S2Ø2	CPA PIA 34 CPA PIA 35	S2Ø2	CPA CLK FLAG CPA FOV EN

1 2 3 4 5 6 7 8 9 10 11 12 13 14 15 16 17 18 19 20 21 22 23 24 25 26 27 28 29 30 31 32 33 34 35 36 37 38 39 40 41 42 43 44

REVISIONS CHK	CHANGE NO.	REV.
	WIRE LISTED 2/23	PØ1
	REVISED 3/9/67	PØ2
	REVISED 3/16/67	PØ3
	REVISED 4/3/67	PØ4
	REVISED 4/17/67	PØ5

UNLESS OTHERWISE SPECIFIED
UNLESS OTHERWISE SPECIFIED DIMENSION IN INCHES
TOLERANCES: DECIMALS ± .005 FRACTIONS ± 1/64 ANGLES ± 0°30'
FINAL SURFACE QUALITY ✓
REMOVE BURRS AND BREAK SHARP CORNERS
MATERIAL
FINISH

DRN. N. Stephenson DATE 1-26-67
CHK'D. DATE
ENG. DATE
PROJ. ENG. DATE
PROD. DATE
FIRST USED ON
SCALE ~
SHEET OF

digital EQUIPMENT CORPORATION MAYNARD, MASSACHUSETTS

TITLE: MODULE UTILIZATION PDP-1Ø PANELS 3E – 3F

SIZE D CODE UML NUMBER 3E-3F REV. PØ5

DIST.

This drawing and specifications, herein, are the property of Digital Equipment Corporation and shall not be reproduced or copied or used in whole or in part as the basis for the manufacture or sale of items without written permission.

CABLE PINS

FROM	LENGTH	TO	D	E	F	H	J	K	L	M	N	P	R	S	T	U	V
G799 1H41		G799 2DØ2	ARRT FM AD (Ø)	ARRT FM MQ (Ø)	GND	ARRT FM AD (1)	GND	ARRT FM MQ (1)	GND	ARLT FM FM (1)	GND	ARØ-5 FM SCAD 3-8(J)	GND	AR1-8 FM ARØ (J)	AR1-8 FM SCAD 1-8(J)	GND	ARRT FM PC (J) B
1H42		2CØ3	ARLT FM IOB (1)	ARRT FM IOB (1)	GND	ARLT FM AD (Ø)	GND	ARLT FM MQ (Ø)	GND	ARLT FM AD (1)	GND	ARLT FM MQ (1)	GND	ARLT FM FLAGS(J) A	ARRT FM PC (J) A	GND	ARLT FM FLAGS(J) B
1H43		2CØ2	ARRT SH RT A	ARRT SH RT B	GND	ARRT SH LT A	GND	ARRT SH LT B	GND	ARRT CLR	GND	ARRT FM FM (1)	GND	ARLT FM IR (1)	ARLT FM DS (1)	GND	ARRT FM DS (1)
1H44		2BØ3	ARLT CLR	ARLT FM ARRT (J) B	GND	ARLT SH LT B	GND	ARLT SH RT B	GND	ARLT FM ARRT (J) A	GND	ARLT SH LT A	GND	ARLT SH RT A	ARRT FM ARLT (J) A	GND	ARRT FM ARLT (J) B
1K41		2HØ4	MC MEM BUS FM AR(1) A	MC MEM BUS FM AR(1) B	GND	MC MEM BUS FM AR(1) C	GND	BR 1-8 CLR	GND	BR 1-8 SET	GND	BRLT FM AR(Ø)	GND	BRLT FM AR(1)	BRRT FM AR(Ø)	GND	BRRT FM AR (1)
1L41		2JØ4	MQ CLR	MQ SH LT A	GND	MQ SH LT B	GND	MQ SH RT A	GND	MQ SH RT B	GND	MQ FM AD(J) A	GND	MQ FM AD(J) B	MQ SH LT C	GND	MQ SH RT C
1L42		2JØ3	MQ SH LT D	MQ SH RT D	GND	MQ FM AD(J) C	GND	MQ FM AD(J) D	GND	FMT 3	GND	IR LT CLR	GND	IR RT CLR	IR RDI SETUP	GND	—
1L43		2JØ2	ETØF	ST 1	GND	PCLT FM MA (J)	GND	PCRT FM MA (J)	GND	PCLT +1	GND	PCRT +1	GND	MA FM PICH (1)	—	GND	—
1M43		2MØ2	MA CLR	MA FM PC(J) A	GND	MA FM PC(J) B	GND	MA FM AR(J) A	GND	MA FM AR(J) B	GND	MA FM AS(J) A	GND	MA FM AS(J) B	ITØ	GND	MAI IGN PAR PULSE
1N42		2NØ3	KNT 2	KEY RDI DONE	GND	MR PWR CLR	GND	MI LOAD A	GND	MI LOAD B	GND	MI LOAD C	GND	MI LOAD D	KT2	GND	KT1
1P43		2PØ2	FT 9	MAI CMC RD RS	GND	EX CLR	GND	EX SET	GND	PB CLR	GND	PI RESET B	GND	KNT 1	KNT 3	GND	*IR UUO IND
1S42		2SØ3	MR START	ST 9	GND	PI OK CLRS PIH	GND	PIH FM PICH RQ	GND	PIR FM IOB (1)	GND	PIR STB	GND	PI RESET	PIO CLR	GND	PIO SET
1T43		2TØ2	KT4	MR CLR	GND	KTØA	GND	MC NON EX MEM	GND	MC ILLEG ADR	GND	MC PAR ERR	GND	MCRST 1	KT3	GND	—
3FØ3		1R43	IOT T3B	IOT T4	GND	IOT T5	GND	CPA CONO SET	GND	-	GND	-	GND	KST 2	MR PWR CLR R	GND	MR START R
3EØ1 G799		2T42 G799	KEY DONE	KTØ	GND	KST 1	GND	KST 2	GND	PI CONO SET	GND	CPA MEM PROT FLAG SET	GND	CPA NON EX MEM SET	CPA PAR ERR SET	GND	CPA PDL OV SET
G796 1A43		G796 2AØ3	—	AR 1 (Ø)	AR 1 (1)	AR 2 (1)	AR 3(1)	AR 4 (1)	AR 5 (1)	AR 6 (1)	AR 7 (1)	AR 8 (1)	AR 9 (1)	AR 10 (1)	AR 11 (1)	—	GND
1B41		2BØ4	AD CRY 36(1)	—	—	—	—	—	—	—	AD Ø9 (1)	AD CLR A	ARØ CLR U	ARØ SET U	ARØ CLR	ARØ SET	GND
1B43		2BØ2	SCAD 1 (Ø)	SCAD 1 (1)	SCAD 2 (Ø)	SCAD 2 (1)	SCAD 3 (Ø)	SCAD 3 (1)	SCAD 4 (Ø)	SCAD 4 (1)	SCAD 5 (Ø)	SCAD 5 (1)	SCAD 6 (Ø)	SCAD 6 (1)	SCAD 7 (Ø)	SCAD 7 (1)	GND
1C43		2CØ4	SCAD 8 (Ø)	SCAD 8 (1)	AD CRY Ø (1)	AD CRY 1 (1)	AD CRY Ø (Ø)	AD CRY 1 (Ø)	AD 9 (Ø)	AD Ø-7 = Ø	AD 8-9 = Ø	AD 1Ø-17 = Ø	AD 18-19 = Ø	AD 2Ø-27 = Ø	AD 28-35 = Ø	MQ 9-35 = Ø	GND
1D43		2AØ2	AD AR+EN CLR	AD AR+EN SET	AD AR-EN CLR	AD AR-EN SET	AD BR+EN CLR	AD BR+EN SET	AD BR-EN CLR	AD BR-EN SET	AD -1 LH(Ø)	AD +1 LH (1)	AD CRY INS (Ø)	AD CRY 36(Ø)	AD (1)	AD Ø(Ø)	GND
1D41		2DØ4	MQ 8(Ø)	MQ 35(Ø)	MQ 35(1)	MQ 34 (Ø)	MQ 34(1)	ARMQ PRESERVE SIGN	ARMQ PRESERVE SIGN	ARMQ MULV ASHXVFP	ARMQ AR35 FM MQ Ø EN	ARMQ FP SH EN	AD AR+ EN(1)	AD AR-EN(1)	AD BR+ EN(1)	AD BR-EN (1)	GND
1D42		2DØ3	AR FXU (Ø)	AR FXU (1)	AR DCK (Ø)	AR DCK (1)	AR OV FLAG (Ø)	AR OV FLAG (1)	AR FOV (Ø)	AR FOV (1)	AR CRY Ø FLAG (Ø)	AR CRY Ø FLAG (1)	AR CRY 1 FLAG (Ø)	AR CRY 1 FLAG (1)	BYF 6 (Ø)	BYF 6 (1)	GND
1F41		2FØ4	BR 35 (1)	EX USER(Ø)	EX USER(1)	EX IOT USER (Ø)	EX IOT USER (1)	ARI DFN CLR	ARI DFN SET	AR 8 (Ø)	AR 9 (Ø)	IR ROT	IR ROTC	ARMQ FDV NORM	IR ASHC	IR ASHC	GND
1F42		2FØ3	BR 8 (1)	BR 11(Ø)	BR 11(1)	BR 12 (Ø)	BR 12 (1)	BR 18(Ø)	BR 18(1)	BR 28 (1)	BR 29 (1)	BR 3Ø (1)	BR 31 (1)	BR 32 (1)	BR 33 (1)	BR 34 (1)	GND
1F43		2FØ2	BR Ø (Ø)	BR Ø (1)	BR 1 (Ø)	BR 1 (1)	BR 2 (Ø)	BR 2 (1)	BR 3 (Ø)	BR 3 (1)	BR 4 (Ø)	BR 4 (1)	BR 5 (1)	BR 6 (Ø)	BR 6 (1)	BR 7 (1)	GND
1N43		2HØ2	ARMQ LRC VMUL	ARMQ FP SH EN	ARMQ ASHC VMUL LAST	ARMQ BYTE MASK	DSF 1 (1)	IR 7 (Ø)	IR 7 (1)	IR 8 (Ø)	IR 8 (1)	IR 9 (Ø)	IR 9 (1)	IR 1Ø (Ø)	IR 1Ø (1)	IR 11 (Ø)	GND
1P44		2HØ3	IR Ø (1)	IR Ø (Ø)	IR 1 (Ø)	IR 1 (1)	IR 2 (Ø)	IR 2 (1)	IR 3 (Ø)	IR 3 (1)	IR 4 (Ø)	IR 4 (1)	IR 5 (Ø)	IR 5 (1)	IR 6 (Ø)	IR 6 (1)	GND
1M41		2MØ4	IR 11 (1)	IR 12 (Ø)	IR 12 (1)	IR 13 (Ø)	IR 13 (1)	IR 14 (Ø)	IR 15 (Ø)	IR 16 (Ø)	IR 17 (Ø)	IR LT EN(1)	IR RT EN (1)	IR UUO	IR 1XX	E UUOF(1)	GND
1M42		2MØ3	SC STOP SW	SC STOP (Ø)	FMA AC EN	FMA RC2 EN	FMA MA EN	FMA XR EN	FMA FM AR (J)	—	—	—	—	—	—	AR 18 (1)	GND
1N41		2NØ4	KEY PROG STOP	KEY PI INH (Ø)	E XCT F (Ø)	EX REL A	EX REL A	EX REL B	EX REL B	MA 18-31 = Ø	MA 18-31 = Ø	MAI FMA SEL (1)	MAI FMA SEL (Ø)	MC REQ CYC	MC RD(1)	MC WR (1)	GND
1P42		2PØ3	PRA ILL ADR	PRA ILL ADR	KEY START (1)	IR PUSH	IR PUSHJ	IR POPS	IR JRST	PI RQ	PI RQ	PI OV (1)	PB PAR (Ø)	PB PAR (1)	—	—	GND
1R41		2RØ4	KEY RIM(Ø)	MI PROG DIS SW	AS = RLA	AS = FMA	KEY F1 (1)	RUN (1)	RUN (Ø)	KEY CONT (1)	PI CYC (1)	KEY RDI (1)	PN PAR ODD	PN PAR EVEN	PI DATA I/O	KEY NEXT	GND
1S41		2SØ4	MC FM EN	PI SEL	KEY RIM(1)	KEY ITO EN	MC IGNORE PARITY (1)	—	BIO PI SEL	IOT DATAO	IOT DATAI	KEY CONT (Ø)	IOT BLK	MC STOP(1)	MC STOP (Ø)	KEY EXECUTE (1)	GND
3CØ1		2T39	IOB Ø	IOB 1	IOB 2	IOB 3	IOB 4	IOB 5	IOB 6	IOB 7	IOB 8	IOB 9	IOB 1Ø	IOB 11	IOB 12	IOB 13	GND
3CØ2		2T38	IOB 14	IOB 15	IOB 16	IOB 17	IOB 18	IOB 19	IOB 2Ø	IOB 21	IOB 22	IOB 23	IOB 24	IOB 25	IOB 26	IOB 27	GND
3CØ3 G796		2T37 G796	RUN (1)	RUN (Ø)	IOB RDI DATA	KEY CONT (1)	KEY CONT (Ø)	KEY SING INST	IOB 28	IOB 29	IOB 3Ø	IOB 31	IOB 32	IOB 33	IOB 34	IOB 35	GND

NOTES: 1.*

NAME	ORIGIN
IR UUO IND	1P2GF
MC PAR STOP IND	1S18U
MC STOP IND	1T1GU

REVISIONS

CHK	CHANGE NO	REV
	REVISED 3/16/67	PØ1
	REVISED 3/16/67	PØ2
	REVISED 3/17/67	PØ3
	REVISED 3/31/67	PØ4
	REVISED 4/11/67	PØ5
	REVISED 5/21/67	PØ6

QTY.	DESCRIPTION	PART NO.	ITEM NO.

PARTS LIST

UNLESS OTHERWISE SPECIFIED
UNLESS OTHERWISE SPECIFIED
DIMENSION IN INCHES
TOLERANCES
DECIMALS ± .005 FRACTIONS ± 1/64 ANGLES ± 0°30'
FINAL SURFACE QUALITY
REMOVE BURRS AND BREAK SHARP CORNERS

MATERIAL

FINISH

DRN. Joe Ayala DATE 2-1-67
CHK'D. DATE
ENG. DATE
PROJ. ENG. DATE
PROD. DATE
FIRST USED ON
SCALE
SHEET OF

digital EQUIPMENT CORPORATION MAYNARD MASSACHUSETTS

TITLE INTER-BAY CABLES

SIZE D CODE NUMBER IBC1 REV. PØ6
DIST.

This drawing and specifications, herein, are the property of Digital Equipment Corporation and shall not be reproduced or copied or used in whole or in part as the basis for the manufacture or sale of items without written permission.

8 | 7 | 6 | 5 | 4 | 3 | 2 | 1

CABLE PINS

FROM	TO	D	E	F	H	J	K	L	M	N	P	R	S	T	U	V
3DØ1 (G796)	2S4Ø (G796)	IOB Ø ◆	IOB 1 ◆	IOB 2 ◆	IOB 3 ◆	IOB 4 ◆	IOB 5 ◆	IOB 6 ◆	IOB 7 ◆	IOB 8 ◆	IOB 9 ◆	IOB 1Ø ◆	IOB 11 ◆	IOB 12 ◆	IOB 13 ◆	GND
3DØ2	2S39	IOB 14 ◆	IOB 15 ◆	IOB 16 ◆	IOB 17 ◆	IOB 18 ◆	IOB 19 ◆	IOB 2Ø ◆	IOB 21 ◆	IOB 22 ◆	IOB 23 ◆	IOB 24 ◆	IOB 25 ◆	IOB 26 ◆	IOB 27 ◆	GND
3DØ3	2S38	KEY SING INST ◇	KEY START(1) ◆	KEY EXECUTE (1) ◆	KEY SYNC OPS ◆	KT 1 EN ◆	IOB STATUS A ◆	IOB 28 ◆	IOB 29 ◆	IOB 3Ø ◆	IOB 31 ◆	IOB 32 ◆	IOB 33 ◆	IOB 34 ◆	IOB 35 ◆	GND
3FØ1	2S42	IR 3 (Ø) ◆	IR 3 (1) ◆	IR 4 (Ø) ◆	IR 4 (1) ◆	IR 5 (Ø) ◆	IR 5 (1) ◆	IR 6 (Ø) ◆	IR 6 (1) ◆	IR 7 (Ø) ◆	IR 7 (1) ◆	IR 8 (Ø) ◆	IR 8 (1) ◆	IR 9 (Ø) ◆	IR 9 (1) ◆	GND
3FØ2	2S41	IR 1Ø (Ø) ◆	IR 1Ø (1) ◆	IR 11 (Ø) ◆	IR 11 (1) ◆	IR 12 (Ø) ◆	IR 12 (1) ◆	IOB FM AR ◇	AR FOV (1) ◆	AR OV FLAG (1) ◆	IOT DATAI ◇	IOT DATAO ◇	PI STATUS A ◆	PI STATUS B ◆	PI ACT (1) ◆	GND
3EØ2	2T41	PIH 1 (1) ◆	PIH 2 (1) ◆	PIH 3 (1) ◆	PIH 4 (1) ◆	PIH 5 (1) ◆	PIH 6 (1) ◆	PIH 7 (1) ◆	PIO 1 (1) ◆	PIO 2 (1) ◆	PIO 3 (1) ◆	PIO 4 (1) ◆	PIO 5 (1) ◆	PIO 6 (1) ◆	PIO 7 (1) ◆	GND
3EØ3	2T4Ø	KEY F1 (1) ◆	KEY SYNC RQ (1) ◆	KEY SYNC (1) ◆	KEY MEM REF ◆	KEY NEXT ◆	KEY RDI (1) ◆	IOB PI 1 ◆	IOB PI 2 ◆	IOB PI 3 ◆	IOB PI 4 ◆	IOB PI 5 ◆	IOB PI 6 ◆	IOB PI 7 ◆	IOT BLK ◆	GND
3EØ4	1S43	KEY ADR BRK ◆	KEY ADR INST ◆	KEY ADR RD ◆	KEY ADR STOP ◆	KEY ADR STOP ◇	KEY ADR WR ◆	KEY AS STROBE EN ◆	KEY SING CYCLE ◇	KEY DEP V DEP NXT V EXE ◆	KEY DEP V NXT ◆	KEY EX V NXT ◆	KEY NXM STOP ◇	KEY NXM STOP ◆	KEY PAR STOP ◆	GND
3EØ5	1S44	MR PWR CLR ENB ◆	MR PWR CLR ENB ◇	IOT CONO SET ▷	IOT CONO CLR ▷	IOT DATAO SET ▶	IOT DATAO CLR ▶	IOB DATAI A ◆	CPA PWR FAIL (Ø) ◆	IOB DR SPLIT ◇	—	EX IOT USER (1) ◆	CPA PWR DLY ◇	BIO CPA SEL ◆	BIO PI SEL ◇	GND
3EØ6	1L44	IOT BLK ◇	IOT CONI ◇	IOT CONO ◇	IOT CONSO ◆	IOT CONSX ◆	IOT CONSX ◇	IOT CONSZ ◆	IOT T2 ▷	—	IOT GO (1) ◆	IR IOT ◆	KEY AT INH ◆	—	MC ADR BRK SET ◇	GND
1P41 (G796)	2PØ4 (G796)	IOB 23 ◆	IOB 24 ◆	IOB 25 ◇	IOB 26 ◇	IOB 29 ◆	IOB 32 ◆	MI PROG (Ø) ◆	MI PROG (1) ◆	-MR PWR CLR ENB ◇	—	—	—	—		GND
1R42 (G799)	2RØ3 (G799)	MAI CMC ADR ACK ▶	MC BUS WR RS ▶	GND	MC PARITY PULSE ▶	GND	KT 3A ▶	GND	*MC PAR STOP IND ◆	GND	*MC STOP IND ◆	GND	—	—	GND	PI CONO SET ▷

QTY.	DESCRIPTION	PART NO.	ITEM NO.

PARTS LIST

UNLESS OTHERWISE SPECIFIED
DIMENSION IN INCHES
TOLERANCES
DECIMALS ± .005 FRACTIONS ± 1/64 ANGLES ± 0°30'
FINAL SURFACE QUALITY √
REMOVE BURRS AND BREAK SHARP CORNERS

MATERIAL

FINISH

DRN. [signature] DATE
CHK'D. DATE
ENG. DATE
PROJ. ENG. DATE
PROD. DATE
FIRST USED ON

digital EQUIPMENT CORPORATION MAYNARD, MASSACHUSETTS

TITLE: INTER-BAY CABLES

SIZE: D CODE: NUMBER: IBC2 REV.: PØ4

SCALE SHEET OF DIST.

REV.	CHANGE NO.	CHK
PØ1	REVISED 3/10/67	
PØ2	REVISED 3/16/67	
PØ3	REVISED 9/5/67	
PØ4	REVISED 9/11/67	

REVISIONS

DEC FORM NO

This drawing and specifications, herein, are the property of Digital Equipment Corporation and shall not be reproduced or copied or used in whole or in part as the basis for the manufacture or sale of items without written permission.

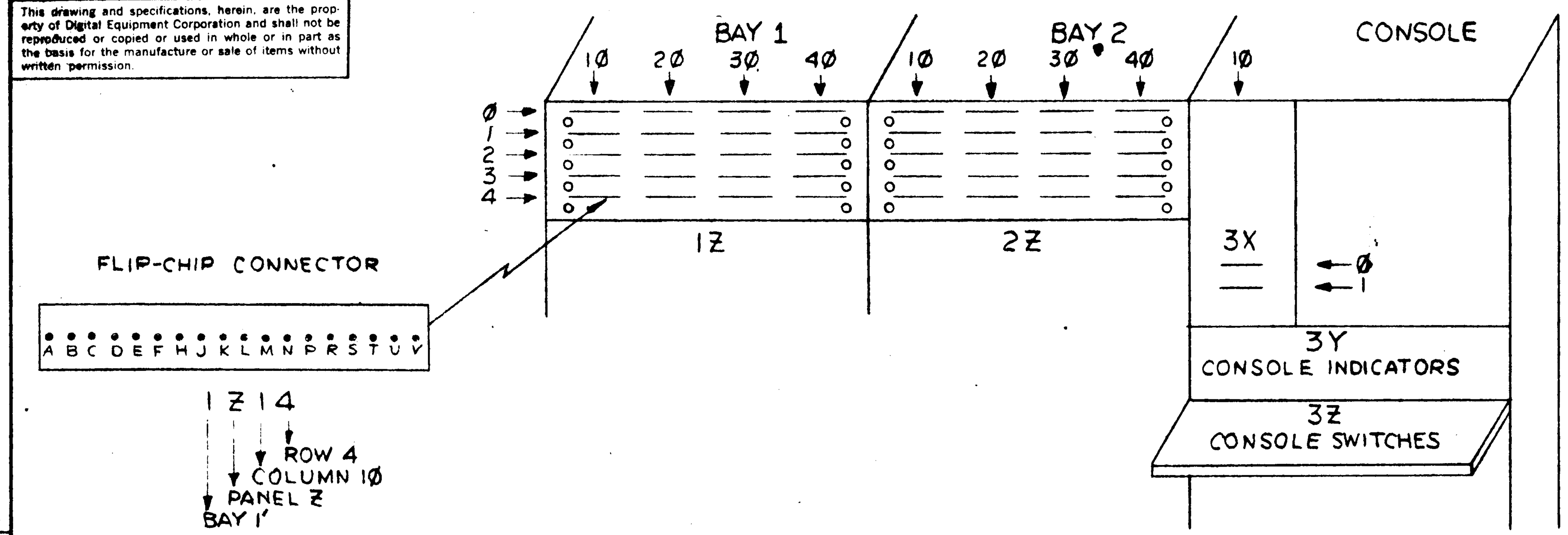

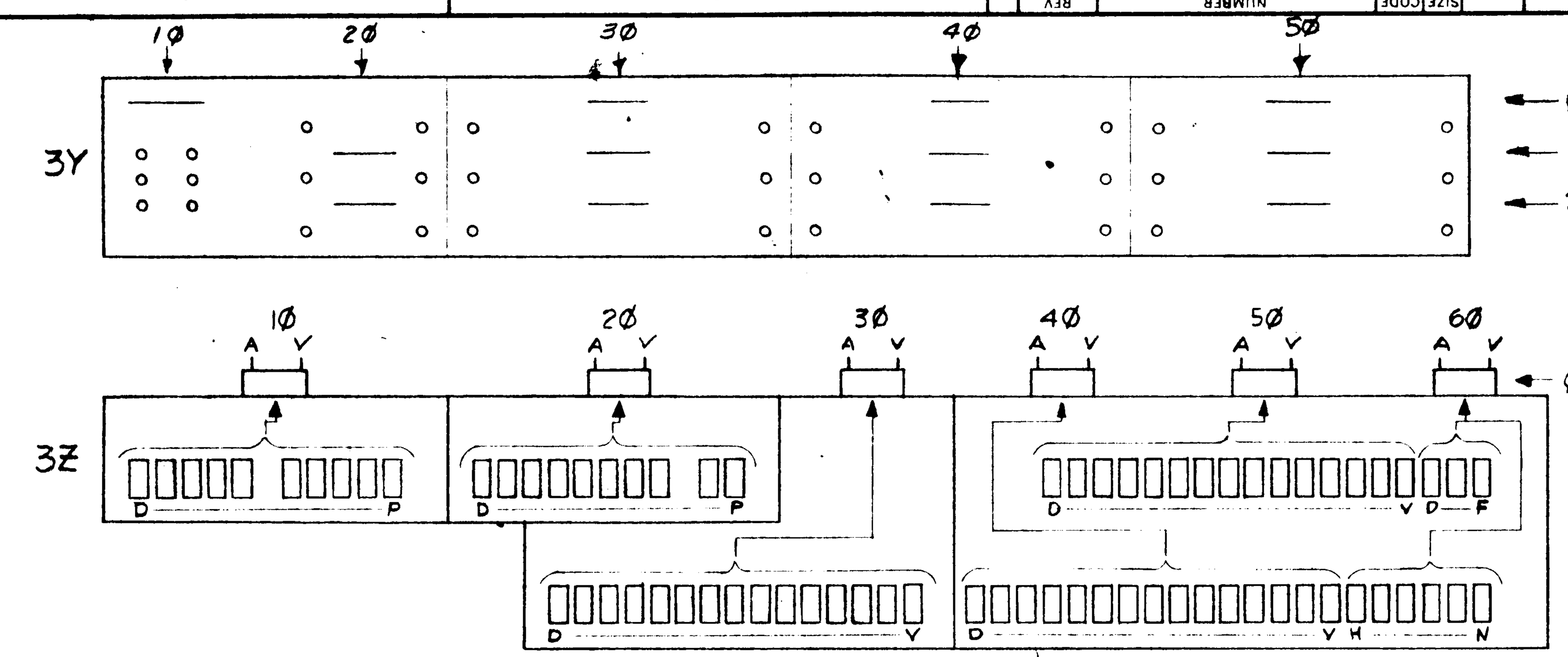

CABLE PINS

FROM	LENGTH	TO	D	ORIGIN	E	ORIGIN	F	ORIGIN	H	ORIGIN	J	ORIGIN	K	ORIGIN	L	ORIGIN	M	ORIGIN	N	ORIGIN	P	ORIGIN	R	ORIGIN	S	ORIGIN	T	ORIGIN	U	ORIGIN	V	ORIGIN
W012		W25Ø																														
1B44		121Ø	SCØ IND	1C31F	SC1 IND	1C31R	SC2 IND	1C33F	SC3 IND	1C33R	SC4 IND	1C35F	SC5 IND	1C35R	SC6 IND	1C37F	SC7 IND	1C37R	SC8 IND	1C39F	SC STOP IND	1C15F	LB BYTE LOAD	BAY 1	DB BYTE DEP	BAY 1					GND	
3BØ6		122Ø	CPA PWR FAIL (1)	BAY 3	CPA ADR BREAK (1)	BAY 3	CPA PAR ERR (1)	BAY 3	CPA PAR ENB (1)	BAY 3	CPA PDL OV (1)	BAY 3	CPA MEM PROT FLAG (1)	BAY 3	CPA NON EX MEM (1)	BAY 3	CPA CLK EN (1)	BAY 3	CPA CLK FLAG (1)	BAY 3	PTP HOLE 8 (1)	BAY 3	PTP HOLE 7 (1)	BAY 3	PTP HOLE 6 (1)	BAY 3						
3BØ5		123Ø	PTP HOLE 5 (1)	BAY 3	PTP HOLE 4 (1)	BAY 3	PTP HOLE 3 (1)	BAY 3	PTP HOLE 2 (1)	BAY 3	PTP HOLE 1 (1)	BAY 3	PTP NO TAPE	BAY 3	PTP BIN (1)	BAY 3	PTP BUSY (1)	BAY 3	PTP DONE (1)	BAY 3	PTP PIA 33 (1)	BAY 3	PTP PIA 34 (1)	BAY 3	PTP PIA 35 (1)	BAY 3						
1C44		124Ø	BLTF1 IND	1JØ6R	MPF1 IND	1J11F	MPF2 IND	1J11R	MSF1 IND	1JØ6F	BYF4 IND	1B15R	BYF5 IND	1C12F	BYF6 IND	1C15R	DSF1 IND	1F11F	DSF7 IND	1F11R	FAF1 IND	1B15F	FDF1 IND	1F18R	FDF3 IND	1F18F						
1A44		1211	SCADØ IND	1A31R	SCAD1 IND	1A32R	SCAD2 IND	1A33R	SCAD3 IND	1A34R	SCAD4 IND	1A35R	SCAD5 IND	1A36R	SCAD6 IND	1A37R	SCAD7 IND	1A38R	SCAD8 IND	1A39R	NR SH RT COND IND	1E24F	NR NORMAL IND	1E25F	NR ROUND	BAY 1						
3BØ4		1221	CPA FOV EN (1)	BAY 3	CPA AR OVEN (1)	BAY 3	CPA PIA 33 (1)	BAY 3	CPA PIA 34 (1)	BAY 3	CPA PIA 35 (1)	BAY 3	-	-	TTY TEST (1)	BAY 3	TTY TTI ACTIVE (1)	BAY 3	TTY TTO ACTIVE (1)	BAY 3	TTY TTI 8 (Ø)	BAY 3	TTY TTI 7 (Ø)	BAY 3	TTY TTI 6 (Ø)	BAY 3						
3BØ3		1231	TTY TTI 5 (Ø)	BAY 3	TTY TTI 4 (Ø)	BAY 3	TTY TTI 3 (Ø)	BAY 3	TTY TTI 2 (Ø)	BAY 3	TTY TTI 1 (Ø)	BAY 3	TTY TTI BUSY (1)	BAY 3	TTY TTI FLAG (1)	BAY 3	TTY TTO BUSY (1)	BAY 3	TTY TTO FLAG (1)	BAY 3	TTY PIA 33 (1)	BAY 3	TTY PIA 34 (1)	BAY 3	TTY PIA 35 (1)	BAY 3						
1K44		1241	NRF1 IND	1C12R	KEY RIM (1)	BAY 3	IOT F1 IND	1R3ØF	IOT GO IND	1R3ØR	-	-	AR OV FLAG IND	1K18F	AR CRY Ø FLAG IND	1K18R	AR CRY 1 FLAG IND	1K2ØF	AR FOV IND	1K2ØR	AR FXU IND	1K23F	AR DCK IND	1K23R	AR OV COND	BAY 1						
1D44		1212	FE Ø IND	1D31F	FE 1 IND	1D31R	FE 2 IND	1D33F	FE 3 IND	1D33R	FE 4 IND	1D35F	FE 5 IND	1D35R	FE 6 IND	1D37F	FE 7 IND	1D37R	FE 8 IND	1C39R	SCAD DATA Ø IND	1A25F	SCAD DATA 1 IND	1A25R	SCAD SC COMP IND	1A28F						
1J44		1222	SCAD+1 EN IND	1A28R	SCAD BR EN IND	1B28F	SCAD AR 6-11 EN IND	1B28R	SCAD 2ØØ EN IND	1B26F	SCAD 33 EN IND	1B25R	AS=RLA	BAY 1	AS=FMA	BAY 1	EX ILL OP IND	1P22R	EX PI SYNC IND	1P16F	EX MODE SYNC IND	1P25R	EX IOT USER IND	1P25F	EX REL A	BAY 1						
3AØ2		1232	PTR ENB (1)	BAY 3	PTR PWR (1)	BAY 3	PTR EOT (1)	BAY 3	PTR BIN (1)	BAY 3	PTR BUSY (1)	BAY 3	PTR DONE (1)	BAY 3	PTR CNT Ø (1)	BAY 3	PTR CNT 1 (1)	BAY 3	PTR CNT 2 (1)	BAY 3	PTR PIA 33 (1)	BAY 3	PTR PIA 34 (1)	BAY 3	PTR PIA 35 (1)	BAY 3						
1E44		1242	-	-	AD AR+EN (1)	*1D42R	AD AR-EN (1)	*1D42S	AD BR+EN (1)	*1D42T	AD BR-EN (1)	*1D42U	AD CRY 36 IND	1E33R	AD CRY INS IND	1E3ØF	AD+1 LH IND	1E3ØR	AD-1 LH IND	1E33F	AD MD+ IND	1F26F	AD MD- IND	1F27F	AD COND IND	1F25F						
3AØ3		1213	PTR Ø (1)	BAY 3	PTR 1 (1)	BAY 3	PTR 2 (1)	BAY 3	PTR 3 (1)	BAY 3	PTR 4 (1)	BAY 3	PTR 5 (1)	BAY 3	PTR 6 (1)	BAY 3	PTR 7 (1)	BAY 3	PTR 8 (1)	BAY 3	PTR 9 (1)	BAY 3	PTR 1Ø (1)	BAY 3	PTR 11 (1)	BAY 3						
3AØ4		1223	PTR 12 (1)	BAY 3	PTR 13 (1)	BAY 3	PTR 14 (1)	BAY 3	PTR 15 (1)	BAY 3	PTR 16 (1)	BAY 3	PTR 17 (1)	BAY 3	PTR 18 (1)	BAY 3	PTR 19 (1)	BAY 3	PTR 2Ø (1)	BAY 3	PTR 21 (1)	BAY 3	PTR 22 (1)	BAY 3	PTR 23 (1)	BAY 3						
3AØ5		1233	PTR 24 (1)	BAY 3	PTR 25 (1)	BAY 3	PTR 26 (1)	BAY 3	PTR 27 (1)	BAY 3	PTR 28 (1)	BAY 3	PTR 29 (1)	BAY 3	PTR 3Ø (1)	BAY 3	PTR 31 (1)	BAY 3	PTR 32	BAY 3	PTR 33 (1)	BAY 3	PTR 34 (1)	BAY 3	PTR 35 (1)	BAY 3						
1M44		1243	-	-	FCE	BAY 1	FCE PSE	BAY 1	FAC INH	BAY 1	FAC2	BAY 1	FCC ACLT	BAY 1	FCC ACRT	BAY 1	SCE	BAY 1	ST INH	BAY 1	SAC2	BAY 1	SAC INH	BAY 1	SAR+BR	BAY 1						
2R44		1214	IOB Ø	BAY 2	IOB 1	BAY 2	IOB 2	BAY 2	IOB 3	BAY 2	IOB 4	BAY 2	IOB 5	BAY 2	IOB 6	BAY 2	IOB 7	BAY 2	IOB 8	BAY 2	IOB 9	BAY 2	IOB 1Ø	BAY 2	IOB 11	BAY 2						
2S43		1224	IOB 12	BAY 2	IOB 13	BAY 2	IOB 14	BAY 2	IOB 15	BAY 2	IOB 16	BAY 2	IOB 17	BAY 2	IOB 18	BAY 2	IOB 19	BAY 2	IOB 2Ø	BAY 2	IOB 21	BAY 2	IOB 22	BAY 2	IOB 23	BAY 2						
2S44		1234	IOB 24	BAY 2	IOB 25	BAY 2	IOB 26	BAY 2	IOB 27	BAY 2	IOB 28	BAY 2	IOB 29	BAY 2	IOB 3Ø	BAY 2	IOB 31	BAY 2	IOB 32	BAY 2	IOB 33	BAY 2	IOB 34	BAY 2	IOB 35	BAY 2						
1N44		1244	IFØ IND	1MØ5F	AF 2 IND	1PØ9F	FF1 IND	1MØ4F	FF2 IND	1MØ4R	FF4 IND	1MØ5F	E UUOF IND	1MØ9F	E XCTF IND	1MØ9R	E LONG	BAY 1	EFØ LONG	BAY 1	SF1 IND	1R19F	SF6 IND	1R19R	SF8 IND	1S22F						
2DØ1		221Ø	ARØ IND	2CØ7F	AR1 IND	2CØ7R	AR2 IND	2CØ9F	AR3 IND	2CØ9R	AR4 IND	2C11F	AR5 IND	2C11R	AR6 IND	2C13F	AR7 IND	2C13R	AR8 IND	2C15F	AR9 IND	2C15R	AR1Ø IND	2C17F	AR11 IND	2C17R						
2EØ2		222Ø	AR12 IND	2C19F	AR13 IND	2C19R	AR14 IND	2C21F	AR15 IND	2C21R	AR16 IND	2C23F	AR17 IND	2C23R	AR18 IND	2C26F	AR19 IND	2C26R	AR2Ø IND	2C28F	AR21 IND	2C28R	AR22 IND	2C3ØF	AR23 IND	2C3ØR						
2EØ4		223Ø	AR24 IND	2C32F	AR25 IND	2C32R	AR26 IND	2C34F	AR27 IND	2C34R	AR28 IND	2C36F	AR29 IND	2C36R	AR3Ø IND	2C38F	AR31 IND	2C38R	AR32 IND	2C4ØF	AR33 IND	2C4ØR	AR34 IND	2C42F	AR35 IND	2C42R						
1R44		224Ø	PI OV IND	1PØ9R	PI CYC IND	1P16R	MC RQ IND	1T16R	MC RD IND	1T16H	MC WR IND	1T16L	MC RQ CYC	BAY 1	MC SPLIT CYC SYNC IND	1S18R	MC FM EN	BAY 1	MAI FMA SEL IND	1S22R	FMA AC IND	1T38R	FMA AC2 IND	1T39F	FMA XR IND	1T38F						
2EØ1		2211	BRØ IND	2FØ7F	BR1 IND	2FØ7R	BR2 IND	2FØ9F	BR3 IND	2FØ9R	BR4 IND	2F11F	BR5 IND	2F11R	BR6 IND	2F13F	BR7 IND	2F13R	BR8 IND	2F15F	BR9 IND	2F15R	BR1Ø IND	2F17F	BR11 IND	2F15R						
2EØ3		2221	BR12 IND	2F19F	BR13 IND	2F19R	BR14 IND	2F21F	BR15 IND	2F21R	BR16 IND	2F23F	BR17 IND	2F23R	BR18 IND	2F26F	BR19 IND	2F26R	BR2Ø IND	2F28F	BR21 IND	2F28R	BR22 IND	2F3ØF	BR23 IND	2F3ØR						
2FØ1		2231	BR24 IND	2F32F	BR25 IND	2F32R	BR26 IND	2F34F	BR27 IND	2F34R	BR28 IND	2F36F	BR29 IND	2F36R	BR3Ø IND	2F38F	BR31 IND	2F38R	BR32 IND	2F4ØF	BR33 IND	2F4ØR	BR34 IND	2F42F	BR35 IND	2F42R						
3BØ7		2241	KEY F1 (1)	*3EØ3D	KEY SYNC RQ (1)	*3EØ3E	KEY SYNC (1)	*3EØ3F	KEY RESET (1)	BAY 3	KEY EXAM (1)	BAY 3	KEY EX NXT (1)	BAY 3	KEY DEP (1)	BAY 3	KEY DEP NXT (1)	BAY 3	KEY RDI (1)	BAY 3	KEY START (1)	BAY 3	KEY EXE (1)	BAY 3	KEY CONT (1)	BAY 3						
2AØ1		2212	ADØ IND	2AØ7R	AD1 IND	2AØ8R	AD2 IND	2AØ9R	AD3 IND	2A1ØR	AD4 IND	2A11R	AD5 IND	2A12R	AD6 IND	2A13R	AD7 IND	2A14R	AD8 IND	2A15R	AD9 IND	2A16R	AD1Ø IND	2A17R	AD11 IND	2A18R						
2BØ1		2222	AD12 IND	2A19R	AD13 IND	2A2ØR	AD14 IND	2A21R	AD15 IND	2A22R	AD16 IND	2A23R	AD17 IND	2A24R	AD18 IND	2A26R	AD19 IND	2A27R	AD2Ø IND	2A28R	AD21 IND	2A29R	AD22 IND	2A3ØR	AD23 IND	2A31R						
2CØ1		2232	AD24 IND	2A32R	AD25 IND	2A33R	AD26 IND	2A34R	AD27 IND	2A35R	AD28 IND	2A36R	AD29 IND	2A37R	AD3Ø IND	2A38R	AD31 IND	2A39R	AD32 IND	2A4ØR	AD33 IND	2A41R	AD34 IND	2A42R	AD35 IND	2A43R						
2NØ1		2242	-	-	IR UUO IND	*2PØ3V	IR L7 EN (1)	BAY 2	IR RT EN (1)	BAY 2	RL 18 (1)	BAY 2	RL 19 (1)	BAY 2	RL 2Ø (1)	BAY 2	RL 21 (1)	BAY 2	RL 22 (1)	BAY 2	RL 23 (1)	BAY 2	RL 24 (1)	BAY 2	RL 25 (1)	BAY 2						
2HØ1		2213	MQØ IND	2HØ7F	MQ1 IND	2HØ7R	MQ2 IND	2HØ9F	MQ3 IND	2HØ9R	MQ4 IND	2H11F	MQ5 IND	2H11R	MQ6 IND	2H13F	MQ7 IND	2H13R	MQ8 IND	2H15F	MQ9 IND	2H15R	MQ1Ø IND	2H17F	MQ11 IND	2H17R						
2JØ1		2223	MQ12 IND	2H19F	MQ13 IND	2H19R	MQ14 IND	2H21F	MQ15 IND	2H21R	MQ16 IND	2H23F	MQ17 IND	2H23R	MQ18 IND	2H26F	MQ19 IND	2H26R	MQ2Ø IND	2H28F	MQ21 IND	2H28R	MQ22 IND	2H3ØF	MQ23 IND	2H3ØR						
2MØ1		2233	MQ24 IND	2H32F	MQ25 IND	2H32R	MQ26 IND	2H34F	MQ27 IND	2H34R	MQ28 IND	2H36F	MQ29 IND	2H36R	MQ3Ø IND	2H38F	MQ31 IND	2H38R	MQ32 IND	2H4ØF	MQ33 IND	2H4ØR	MQ34 IND	2H42F	MQ35 IND	2H42R						
2NØ2		2243	FMA 32	BAY 2	FMA 33	BAY 2	FMA 34	BAY 2	FMA 35	BAY 2	RLA18 IND	2M36R	RLA19 IND	2M37R	RLA2Ø IND	2M38R	RLA21 IND	2M39R	RLA22 IND	2M4ØR	RLA23 IND	2M41R	RLA24 IND	2M42R	RLA25 IND	2M43R						
2RØ1		2214	PBØ IND	2PØ7H	PB1 IND	2PØ7L	PB2 IND	2PØ7R	PB3 IND	2PØ7U	PB4 IND	2PØ9H	PB5 IND	2PØ9L	PB6 IND	2PØ9R	PB7 IND	2PØ9U	PB8 IND	2P11H	PB9 IND	2P11L	PB1Ø IND	2P11R	PB11 IND	2P11U						
2SØ1		2224	PB12 IND	2P13H	PB13 IND	2P13L	PB14 IND	2P13R	PB15 IND	2P13U	PB16 IND	2P15H	PB17 IND	2P15L	PB18 IND	2P15R	PB19 IND	2P15U	PB2Ø IND	2P17H	PB21 IND	2P17L	PB22 IND	2P17R	PB23 IND	2P17U						
2TØ1		2234	PB24 IND	2P19H	PB25 IND	2P19L	PB26 IND	2P19R	PB27 IND	2P19U	PB28 IND	2P21H	PB29 IND	2P21L	PB3Ø IND	2P21R	PB31 IND	2P21U	PB32 IND	2P23H	PB33 IND	2P23L	PB34 IND	2P23R	PB35 IND	2P23U					GND	
W012		W25Ø																														

NOTES: 1.* THIS IS A PIN ON THE IBC CABLE (ORIGIN OF SIGNAL IN ANOTHER BAY)

REVISIONS

CHK	CHANGE NO.	REV.
	REDRAWN 1/25/67	PØ1
	REVISED 3/3/67	PØ2
	REVISED 4/11/67	PØ3
	REVISED 4/17/67	PØ4

QTY.	DESCRIPTION	PART NO.	ITEM NO.
	PARTS LIST		

UNLESS OTHERWISE SPECIFIED

UNLESS OTHERWISE SPECIFIED
DIMENSION IN INCHES
TOLERANCES
DECIMALS ± .005 FRACTIONS ± 1/64 ANGLES ± 0°30'
FINAL SURFACE QUALITY
REMOVE BURRS AND BREAK SHARP CORNERS

MATERIAL

FINISH

DRN. DATE
CHK'D. DATE
ENG. DATE
PROJ. ENG. DATE
PROD. DATE
FIRST USED ON
SCALE
SHEET 1 OF 2

digital EQUIPMENT CORPORATION
MAYNARD MASSACHUSETTS

TITLE
INDICATOR AND CONSOLE SWITCH CONNECTIONS

SIZE D | CODE | NUMBER ICSC1 | REV PØ3

DIST.

FROM	LENGTH	TO	CABLE PINS D	ORIGIN	E	ORIGIN	F	ORIGIN	H	ORIGIN	J	ORIGIN	K	ORIGIN	L	ORIGIN	M	ORIGIN	N	ORIGIN	P	ORIGIN	R	ORIGIN	S	ORIGIN	T	ORIGIN	U	ORIGIN	V	ORIGIN
2PØ1 WØ12		2Y44 W25Ø	MC IGNORE PARITY (1)	*2S14J	PB PAR (1)	BAY 2	PN PAR COD IND	2P15F	MC PAR STOP IND	2RØ3M	PR 18 (1)	BAY 2	PR 19 (1)	BAY 2	PR 2Ø(1)	BAY 2	PR 21(1)	BAY 2	PR 22(1)	BAY 2	PR 23(1)	BAY 2	PR 24(1)	BAY 2	PR 25(1)	BAY 2						
2P37		3Y1Ø	RUN IND	2R28F	PI ACT(1)	BAY 2	PWR ON IND	2P31P	MC STOP IND	2RØ5P	EX USER (1)	BAY 2	KEY PROG STOP	BAY 2	—	—	—	—	—	—	—	—	—	—	—	—					GND	
3EØ7		3Y3Ø	—	—	IOB PI 1	BAY 3	IOB PI 2	BAY 3	IOB PI 3	BAY 3	IOB PI 4	BAY 3	IOB PI 5	BAY 3	IOB PI 6	BAY 3	IOB PI 7	BAY 3	—	—	—	—	—	—	—	—						
2P38		3Y4Ø	MI PROG (Ø)	*2PØ4L	MI PROG (1)	*2PØ4M	—	—	—	—	—	—	—	—	PC 18 IND	2J26F	PC 19 IND	2J26R	PC 2Ø IND	2J28F	PC 21 IND	2J28R	PC 22 IND	2J3ØF	PC 23 IND	2J3ØR						
2P39		3Y5Ø	PC 24 IND	2J32F	PC 25 IND	2J32R	PC 26 IND	2J34F	PC 27 IND	2J34R	PC 28 IND	2J36F	PC 29 IND	2J36R	PC 3Ø IND	2J38F	PC 31 IND	2J38R	PC 32 IND	2J4ØF	PC 33 IND	2J4ØR	PC 34 IND	2J42F	PC 35 IND	2J42R						
2P4Ø		3Y21	PIH 1 IND	2SØ7F	PIH 2 IND	2SØ7R	PIH 3 IND	2SØ9F	PIH 4 IND	2SØ9R	PIH 5 IND	2S11F	PIH 6 IND	2S11R	PIH 7 IND	2S13F	PIR 1 IND	2S13R	PIR 2 IND	2S15F	PIR 3 IND	2S15R	PIR 4 IND	2S17F	—	—						
2P41		3Y31	IR Ø IND	2JØ7F	IR 1 IND	2JØ7R	IR 2 IND	2JØ9F	IR 3 IND	2JØ9R	IR 4 IND	2J11F	IR 5 IND	2J11R	IR 6 IND	2J13F	IR 7 IND	2J13R	IR 8 IND	2J15F	IR 9 IND	2J15R	IR 1Ø IND	2J17F	IR 11 IND	2J17R						
2P42		3Y41	IR 12 IND	2J19F	IR 13 IND	2J19R	IR 14 IND	2J21F	IR 15 IND	2J21R	IR 16 IND	2J23F	IR 17 IND	2J23R	MA 18 IND	2L26F	MA 19 IND	2L26R	MA 2Ø IND	2L28F	MA 21 IND	2L28R	MA 22 IND	2L3ØF	MA 23 IND	2L3ØR						
2P43		3Y51	MA 24 IND	2L32F	MA 25 IND	2L32R	MA 26 IND	2L34F	MA 27 IND	2L34R	MA 28 IND	2L36F	MA 29 IND	2L36R	MA 3Ø IND	2L38F	MA 31 IND	2L38R	MA 32 IND	2L4ØF	MA 33 IND	2L4ØR	MA 34 IND	2L42F	MA 35 IND	2L42R						
2P44		3Y22	PIO 1 (1)	BAY 2	PIO 2 (1)	BAY 2	PIO 3 (1)	BAY 2	PIO 4 (1)	BAY 2	PIO 5 (1)	BAY 2	PIO 6 (1)	BAY 2	PIO 7 (1)	BAY 2	PIR 5 IND	2S17R	PIR 6 IND	2S19F	PIR 7 IND	2S19R	—	—	—	—						
2R41		3Y32	MI Ø IND	2MØ7H	MI 1 IND	2MØ7L	MI 2 IND	2MØ7R	MI 3 IND	2MØ7U	MI 4 IND	2MØ9H	MI 5 IND	2MØ9L	MI 6 IND	2MØ9R	MI 7 IND	2MØ9U	MI 8 IND	2M11H	MI 9 IND	2M11L	MI 1Ø IND	2M11R	MI 11 IND	2M11U						
2R42		3Y42	MI 12 IND	2M13H	MI 13 IND	2M13L	MI 14 IND	2M13R	MI 15 IND	2M13U	MI 16 IND	2M15H	MI 17 IND	2M15L	MI 18 IND	2M15R	MI 19 IND	2M15U	MI 2Ø IND	2M17H	MI 21 IND	2M17L	MI 22 IND	2M17R	MI 23 IND	2M17U						
2R43 WØ12		3Y52 W25Ø	MI 24 IND	2M19H	MI 25 IND	2M19L	MI 26 IND	2M19R	MI 27 IND	2M19U	MI 28 IND	2M21H	MI 29 IND	2M21L	MI 3Ø IND	2M21R	MI 31 IND	2M21U	MI 32 IND	2M23H	MI 33 IND	2M23L	MI 34 IND	2M23R	MI 35 IND	2M23U						
2R4Ø G796		3X1Ø G796	SC STOP SW	†2MØ3D	MC FM EN	†2SØ2D	MI PROG DIS SW	†2RØ2E	RDI SEL 3	BAY 2	RDI SEL 4	BAY 2	RDI SEL 5	BAY 2	RDI SEL 6	BAY 2	RDI SEL 7	BAY 2	RDI SEL 8	BAY 2	RDI SEL 9	BAY 2	—	—	—	—	—	—	—	—	GND	
3AØ1 G796		3X11 G796	KEY REPEAT BYPASS SW	BAY 3	—	—	KEY SP CNTL-J	BAY 3	KEY SP CNTL-K	BAY 3	KEY SP CNTL-L	BAY 3	KEY SP CNTL-M	BAY 3	KEY SP CNTL-N	BAY 3	GND	—	KEY SP CNTL-P	BAY 3	KEY SP CNTL-R	BAY 3	—	—	—	—	—	—	—	—	GND	
3BØ1 WØ33		3Z1Ø WØ33	KEY SING INST	BAY 3	KEY SING CYCLE	BAY 3	KEY PAR STOP	BAY 3	KEY NXM STOP	BAY 3	KEY REPEAT SW	BAY 3	KEY ADR INST	BAY 3	KEY ADR RD	BAY 3	KEY ADR WR	BAY 3	KEY ADR STOP	BAY 3	KEY ADR BRK	BAY 3	—	—	—	—	—	—	—	—	—	—
3BØ2		3Z2Ø	KEY RDI SW	BAY 3	KEY STA SW	BAY 3	KEY CONT SW	BAY 3	KEY STOP SW	BAY 3	KEY RESET SW	BAY 3	KEY EXE SW	BAY 3	KEY EXA SW	BAY 3	KEY EX NXT SW	BAY 3	KEY DEP SW	BAY 3	KEY DEP NXT SW	BAY 3	—	—	—	—	—	—	—	—	—	—
2R37		3Z3Ø	DS Ø	BAY 2	DS 1	BAY 2	DS 2	BAY 2	DS 3	BAY 2	DS 4	BAY 2	DS 5	BAY 2	DS 6	BAY 2	DS 7	BAY 2	DS 8	BAY 2	DS 9	BAY 2	DS 1Ø	BAY 2	DS 11	BAY 2	DS 12	BAY 2	DS 13	BAY 2	DS 14	BAY 2
2R39		3Z4Ø	DS 15	BAY 2	DS 16	BAY 2	DS 17	BAY 2	DS 18	BAY 2	DS 19	BAY 2	DS 2Ø	BAY 2	DS 21	BAY 2	DS 22	BAY 2	DS 23	BAY 2	DS 24	BAY 2	DS 25	BAY 2	DS 26	BAY 2	DS 27	BAY 2	DS 28	BAY 2	DS 29	BAY 2
2S37		3Z5Ø	AS 18	BAY 2	AS 19	BAY 2	AS 2Ø	BAY 2	AS 21	BAY 2	AS 22	BAY 2	AS 23	BAY 2	AS 24	BAY 2	AS 25	BAY 2	AS 26	BAY 2	AS 27	BAY 2	AS 28	BAY 2	AS 29	BAY 2	AS 3Ø	BAY 2	AS 31	BAY 2	AS 32	BAY 2
2S38 WØ33		3Z6Ø WØ33	AS 33	BAY 2	AS 34	BAY 2	AS 35	BAY 2	DS 3Ø	BAY 2	DS 31	BAY 2	DS 32	BAY 2	DS 33	BAY 2	DS 34	BAY 2	DS 35	BAY 2	—	BAY 2	—	—	—	—	—	—	—	—	—	—

NOTES: 1.* THIS IS A PIN ON THE IBC CABLE (ORIGIN OF SIGNAL IS IN ANOTHER BAY)
2.† THIS IS A PIN ON THE IBC CABLE (SIGNAL IS USED IN BAY 1)

REVISIONS CHK	CHANGE NO	REV
	REDRAWN 1/26/67	PØ1
	REVISED 3/10/67	PØ2
	REVISED 3/27/67	PØ3
	REVISED 9/11/67	PØ4

QTY.	DESCRIPTION	PART NO.	ITEM NO.

PARTS LIST

UNLESS OTHERWISE SPECIFIED
DIMENSION IN INCHES
TOLERANCES
DECIMALS ± .005 FRACTIONS ± 1/64 ANGLES ± 0°30'
FINAL SURFACE QUALITY √
REMOVE BURRS AND BREAK SHARP CORNERS

MATERIAL

FINISH

DRN. DATE
CHK'D. DATE
ENG. DATE
PROJ. ENG. DATE
PROD. DATE
FIRST USED ON
SCALE
SHEET 2 OF 2

digital EQUIPMENT CORPORATION MAYNARD, MASSACHUSETTS

TITLE
INDICATOR AND CONSOLE SWITCH CONNECTIONS

SIZE D CODE NUMBER ICSC2 REV. PØ3

DIST.

DEC FORM NO

This drawing and specifications, herein, are the property of Digital Equipment Corporation and shall not be reproduced or copied or used in whole or in part as the basis for the manufacture or sale of items without written permission.

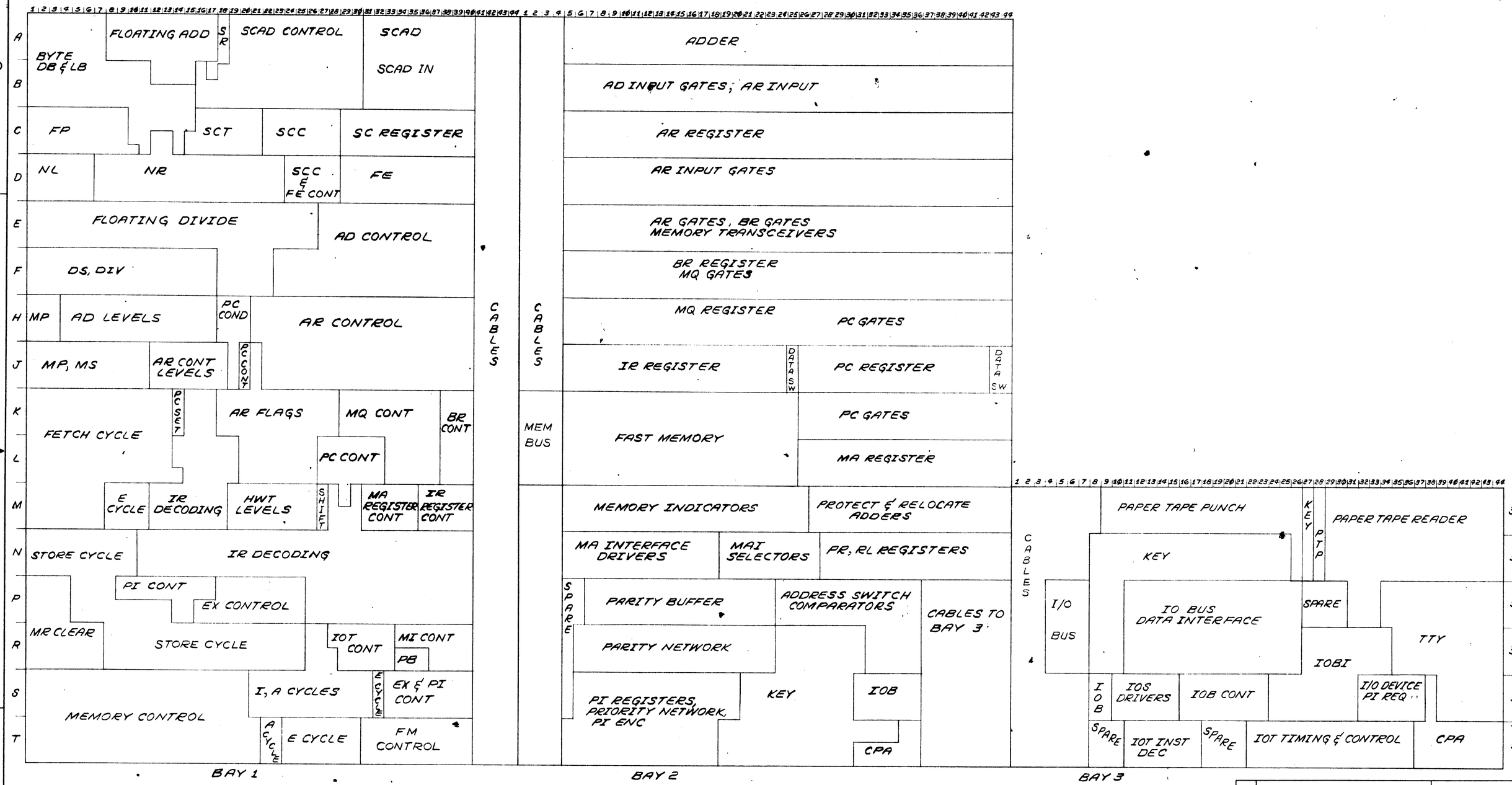

QTY.	DESCRIPTION	PART NO.	ITEM NO.

PARTS LIST

UNLESS OTHERWISE SPECIFIED

UNLESS OTHERWISE SPECIFIED
DIMENSION IN INCHES
TOLERANCES
DECIMALS ± .005 FRACTIONS ± 1/64 ANGLES ± 0°30'
FINAL SURFACE QUALITY
REMOVE BURRS AND BREAK SHARP CORNERS

MATERIAL

FINISH

DRN. Joe Cyprea	DATE 2-1-67	digital EQUIPMENT CORPORATION MAYNARD MASSACHUSETTS
CHKD.	DATE	
ENG.	DATE	TITLE PDP-10 PROCESSOR LAYOUT
PROJ. ENG.	DATE	
PROD.	DATE	
FIRST USED ON		SIZE D CODE NUMBER PRL REV.
SCALE		
SHEET OF		DIST.

REVISIONS: REV. / CHANGE NO. / CHK

DEC FORM NO DRD 103