digital EQUIPMENT CORPORATION MAYNARD MASSACHUSETTS

DRAWING DIRECTORY

CUSTOMER PRINT SET INDEX

THIS IS PRINT SET

	SEQUENCE
DRAWING DIRECTORY	B-DD-KD11-A
KD11-A PROCESSOR (BLOCK DIAGRAM U WORD & TABLES)	D-BD-KD11-A-BD
FLOW DIAGRAM	D-FD-KD11-A-FD
PARTS LIST	A-PL-KD11-A-Ø
MODULE UTILIZATION	D-MU-KD11-A-MU
DATA PATHS	D-CS-M7231-Ø-1
U WORD	D-CS-M7232-Ø-1
IR DECODE	D-CS-M7233-Ø-1
TIMING	D-CS-M7234-Ø-1
STATUS	D-CS-M7235-Ø-1
INTERNAL UNIBUS AND TERMINATOR (M981)	D-CS-5409764-Ø-1
CIRCUIT SCHEMATIC BACK PLANE	C-CS-5410904-Ø-1
BACK PANEL (WIRE & ETCH LIST)	K-WL-KD11-A-WL (COMPLETE)
AWT REVISION STATUS	A-WT-7010230-0
STACK LIMIT REGISTER	B-DD-KJ11-A
LINE FREQUENCY CLOCK	B-DD-KW11-L
MAINTENANCE BOARD (1&2)	D-BS-KM11-Ø-MB
SILK SCREEN (KD11-A)	A-SS-5509081-0-12
SILK SCREEN (KT11-D, KE11-E, F)	A-SS-5509081-0-13

UNIT VARIATIONS

VARIATION	TITLE	PRINT SET TYPE: KD11-A
KD11-A	KD11-A PROCESSOR	X

REVISIONS

REV	CH. NO.	DATE
A	KD11A-C... 11/7/72	10-72
B	KD11A-00005 2/13/73	2-73
C	KD11A-6 6/15/73	6-73
D	KD11A-00007 11/14/73	11-73
E	KD11A-00008	5-74
F	KD11A-00009	6-74
H	KD11A-00010	7-74
J	KD11A-00011	8-74
K	KD11A-00012	8-75
L	KD11A-00013	7-76
M	KD11A-00014	5-77
N	KD11A-00015	11-77

USED ON OPTION/MODEL

DRN.	DATE 9/21/72
CHK'D.	DATE 9/27/72
PROJ ENG.	DATE 9/27/72
PROD.	DATE 9-27-72
FIELD SERV.	DATE 9-27-72

SHEET 1 OF 3

TITLE: KD11-A PROCESSOR

SIZE	CODE	NUMBER	REV
B	DD	KD11-A	N

DIST G

DRB 106

DEC 16-(329)-1062-1-N2

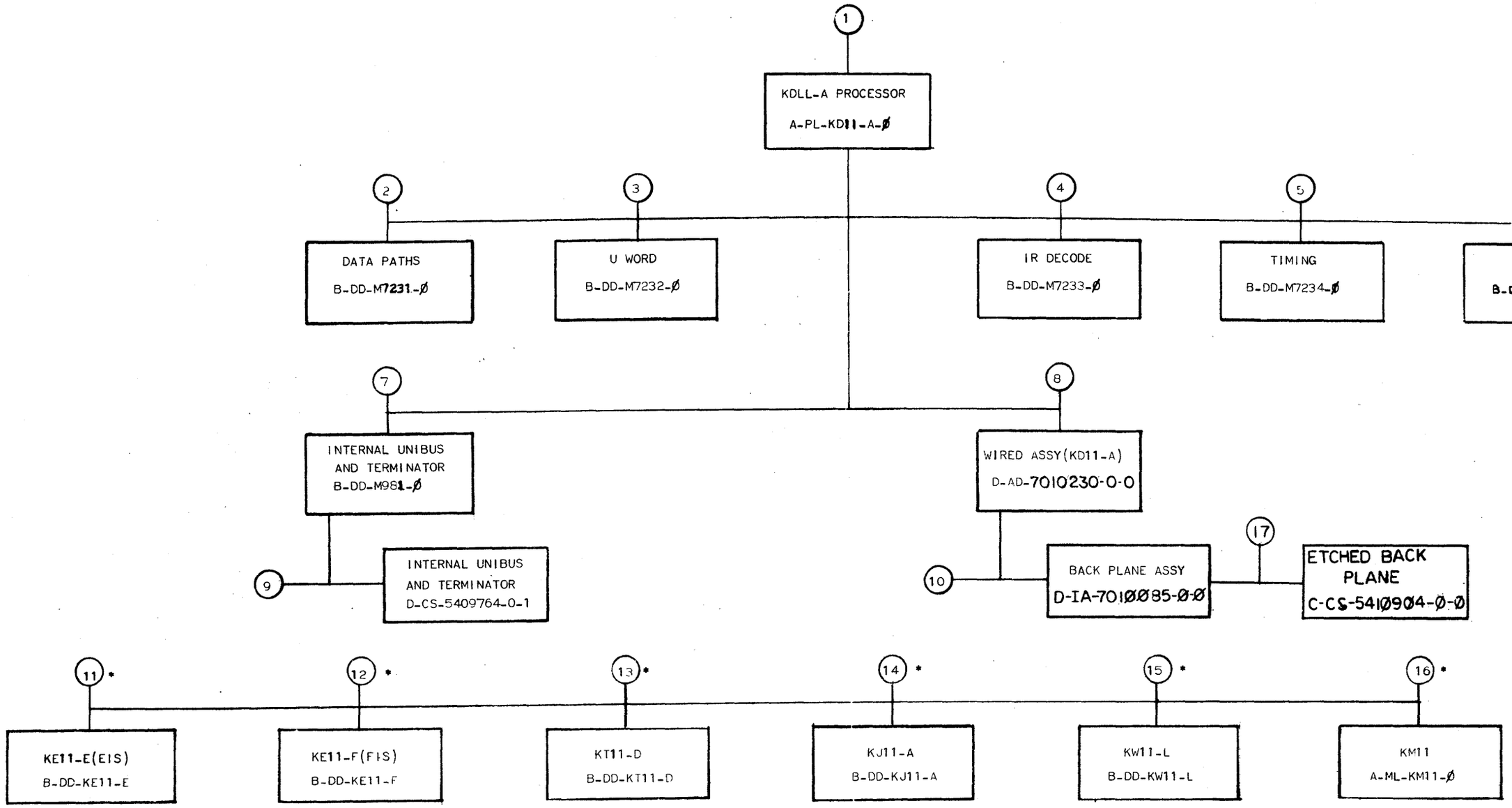

* OPTIONS TO KD11-A PROCESSOR

TITLE		SIZE	CODE	NUMBER	REV
KD11-A PROCESSOR	SHEET 2 OF 3	B	DD	KD11-A	N

DRB 107
DEC 16—(325)—1062—3—N871

ELECTRICAL

CUSTOMER PRINT SET KD11-A	MFG. SET	FIND NO.	DRAWING NO.	REV	NO OF SHT	DESCRIPTION	OPTION NO.
X		1	D-BD-KD11-A-BD	A	2	BLOCK DIAGRAM, U WORD&TABLES	
X			D-FD-KD11-A-FD	B	12	FLOW DIAGRAM	
X			D-MU-KD11-A-MU	A	1	MODULE UTILIZATION	
C			K-WL-KD11-A-WL	N	33	WIRE & ETCH LIST (COMPLETE)	
X		17	C-CS-5410904-0-1	#	1	CIRCUIT SCHEMATIC BACK PLANE	
		2	B-DD-M7231-0		2	DATA PATHS	
X			D-CS-M7231-0-1	#	9	DATA PATHS CIRCUIT SCHEMATIC	
		3	B-DD-M7232-0		2	U WORD	
X			D-CS-M7232-0-1	#	12	U WORD CIRCUIT SCHEMATIC	
		4	B-DD-M7233-0		2	IR DECODE	
X			D-CS-M7233-0-1	#	9	IR DECODE CIRCUIT SCHEMATIC	
		5	B-DD-M7234-0		2	TIMING	
X			D-CS-M7234-0-1	#	6	TIMING CIRCUIT SCHEMATIC	
		6	B-DD-M7235-0		2	STATUS	
X			D-CS-M7235-0-1	#	8	STATUS CIRCUIT SCHEMATIC	
		7	B-DD-M981-0		2	INTERNAL UNIBUS AND TERMINATOR	
X		8	D-CS-5409764-0-1	#	2	INTERNAL UNIBUS AND TERMINATOR CIRCUIT SCHEMATIC	
			B-DD-KY11-D	REF	2	KY11-D CONSOLE	
		11	B-DD-KE11-E	REF	2	KE11-E (EIS)	
		12	B-DD-KE11-F	REF	2	KE11-F (FIS)	
		13	B-DD-KT11-D	REF	2	MEMORY MANAGEMENT	
C		14	B-DD-KJ11-A	#	2	STACK LIMIT REGISTER	
C		15	B-DD-KW11-L	#		LINE FREQUENCY CLOCK	
		16	A-ML-KM11-0	REF	1	MAINTENANCE PANEL(W130,W131)	
X			D-BS-KM11-0-MB	#	3	MAINTENANCE BOARD (1&2)	
X			A-SS-5509081-0-12	#	1	SILK SCREEN (KD11-A)	
X			A-SS-5509081-0-11	#	1	SILK SCREEN(KT11-D,KE11-E,F)	

MECHANICAL

CUSTOMER PRINT SET KD11-A	MFG SET	FIND NO.	DRAWING NO.	REV	NO OF SHT	DESCRIPTION	OPTION NO.
X		1	A-PL-KD11-A-0	A	1	PARTS LIST	
X		8	A-WF7010230-0	#	1	AWT REVISION STATUS	
			D AD 7010230-0-0	#	1	WIRED ASSY (KD11-A)	
		10	D-1A 7010085-0-0		1	BACK PLANE ASSY	
			B-DD-2338-0		4	XOR TESTERS	

TITLE		SIZE	CODE	NUMBER	REV
KD11-A PROCESSOR	SHEET 3 OF 3	B	DD	KD11-A	N

DRB 108

DEC - 16 (325)-1062-2A-R272

6

This drawing and specifications, herein, are the property of Digital Equipment Corporation and shall not be reproduced or copied or used in whole or in part as the basis for the manufacture or sale of items without written permission.

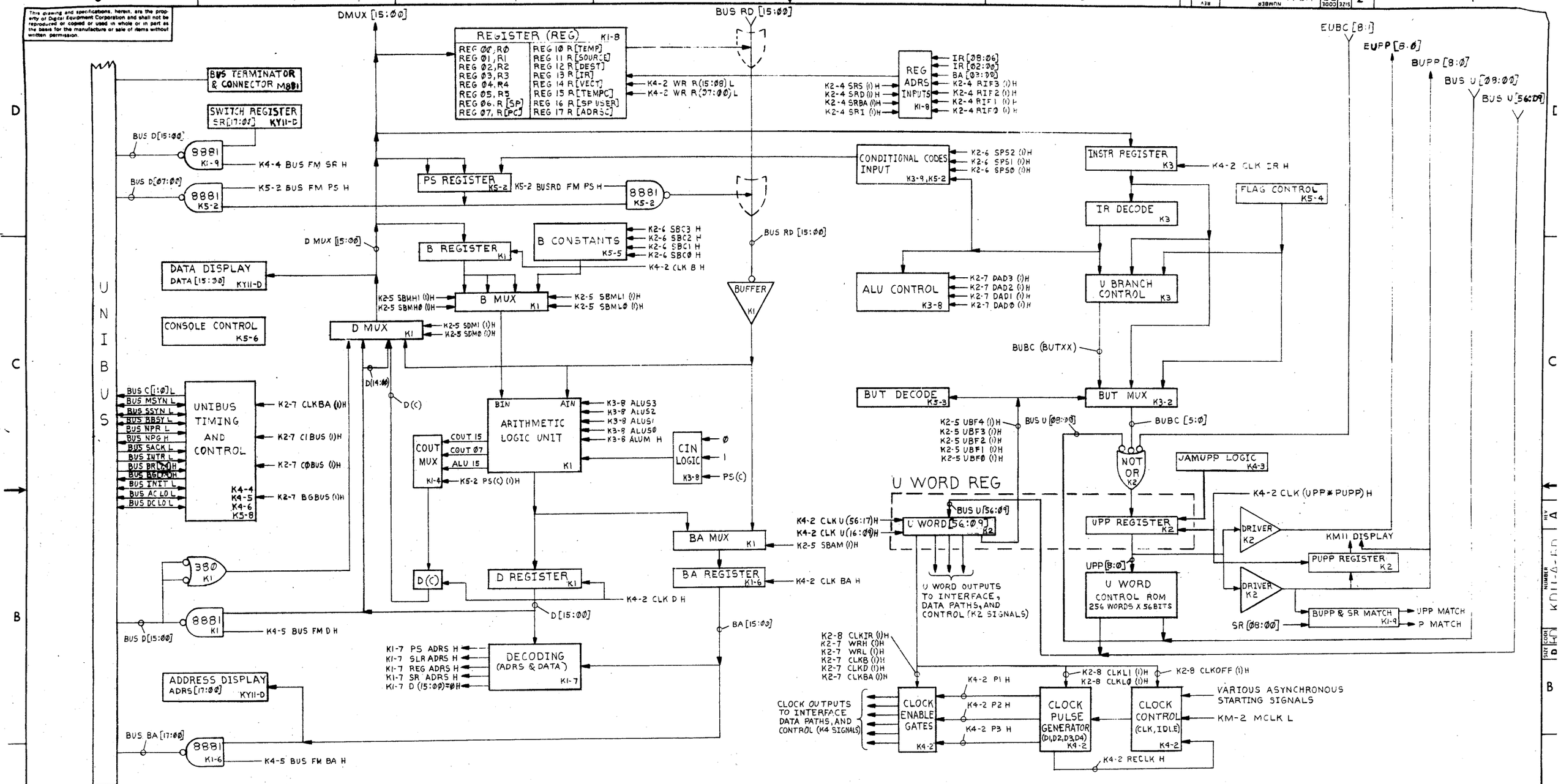

FIRST USED ON OPTION/MODEL	QTY.	DESCRIPTION	PART NO.	ITEM NO.
PDP11		PARTS LIST		

UNLESS OTHERWISE SPECIFIED DIMENSION IN INCHES TOLERANCES

DECIMALS	ANGLES
.XXX = .005	±0° 30'
.XX = .02	
.X = .1	

REMOVE BURRS AND BREAK SHARP CORNERS SURFACE QUALITY ✓

MATERIAL —//—

FINISH —//—

		DATE
DRN.	D. Lindley	7-21-72
CHK'D.	T. Hoover	9-25-72
ENG.	T. Hoover	9-25-72
PROJ. ENG.	T. Hoover	9-25-72
PROD.	W. Stanton	9-25-72

NEXT HIGHER ASSY. B-CD-KD11-A

SCALE NONE

SHEET 1 OF 2

digital EQUIPMENT CORPORATION MAYNARD MASSACHUSETTS

TITLE KD11-A PROCESSOR (BLOCK DIAGRAM)

SIZE	CODE	NUMBER	REV.
D	BD	KD11-A-BD	A

DIST.

REVISIONS			
CHG NO	CHANGE NO	REV	
	KD11A-00005	A	

O'LOUGHLIN 2-14-73

BRUNING 40.522 15840

DEC FORM NO DRD 102-B

ELECTRICAL

CUSTOMER PRINT SET KD11-A	MFG. SET	FIND NO.	DRAWING NO.	REV	NO OF SHT	DESCRIPTION	OPTION NO.
X		1	D-BD-KD11-A-BD	A	2	BLOCK DIAGRAM, U WORD&TABLES	
X			D-FD-KD11-A-FD	B	12	FLOW DIAGRAM	
X			D-MU-KD11-A-MU	A	1	MODULE UTILIZATION	
C			K-WL-KD11-A-WL	N	33	WIRE & ETCH LIST (COMPLETE)	
X		17	C-CS-541Ø9Ø4-Ø-1	#	1	CIRCUIT SCHEMATIC BACK PLANE	
		2	B-DD-M7231-Ø		2	DATA PATHS	
X			D-CS-M7231-Ø-1	#	9	DATA PATHS CIRCUIT SCHEMATIC	
		3	B-DD-M7232-Ø		2	U WORD	
X			D-CS-M7232-Ø-1	#	12	U WORD CIRCUIT SCHEMATIC	
		4	B-DD-M7233-Ø		2	IR DECODE	
X			D-CS-M7233-Ø-1	#	9	IR DECODE CIRCUIT SCHEMATIC	
		5	B-DD-M7234-Ø		2	TIMING	
X			D-CS-M7234-Ø-1	#	6	TIMING CIRCUIT SCHEMATIC	
		6	B-DD-M7235-Ø		2	STATUS	
X			D-CS-M7235-Ø-1	#	8	STATUS CIRCUIT SCHEMATIC	
		7	B-DD-M981-Ø		2	INTERNAL UNIBUS AND TERMINATOR	
X		8	D-CS-54Ø9764-Ø-1	#	2	INTERNAL UNIBUS AND TERMINATOR CIRCUIT SCHEMATIC	
			B-DD-KY11-D	REF	2	KY11-D CONSOLE	
		11	B-DD-KE11-E	REF	2	KE11-E (EIS)	
		12	B-DD-KE11-F	REF	2	KE11-F (FIS)	
		13	B-DD-KT11-D	REF	2	MEMORY MANAGEMENT	
C		14	B-DD-KJ11-A	#	2	STACK LIMIT REGISTER	
C		15	B-DD-KW11-L	#		LINE FREQUENCY CLOCK	
		16	A-ML-KM11-Ø	REF	1	MAINTENANCE PANEL(W130,W131)	
X			D-BS-KM11-Ø-MB	#	3	MAINTENANCE BOARD (1&2)	
X			A-SS-5509081-0-12	#	1	SILK SCREEN (KD11-A)	
X			A-SS-5509081-0-11	#	1	SILK SCREEN(KT11-D,KE11-E,F)	

MECHANICAL

CUSTOMER PRINT SET KD11-A	MFG SET	FIND NO.	DRAWING NO.	REV	NO OF SHT	DESCRIPTION	OPTION NO.
X		1	A-PL-KD11-A-Ø	A	1	PARTS LIST	
X		8	A-WF-7010230-0	#	1	AWT REVISION STATUS	
			D AD 7010230-Ø-Ø	#	1	WIRED ASSY (KD11-A)	
		10	D-1A 7010085-0-0		1	BACK PLANE ASSY	
			B-DD-2338-0		4	XOR TESTERS	

TITLE		SIZE	CODE	NUMBER	REV
KD11-A PROCESSOR	SHEET 3 OF 3	B	DD	KD11-A	N

DRB 108

DEC - 16- (325)-1062-2A-R272

G

This drawing and specifications, herein, are the property of Digital Equipment Corporation and shall not be reproduced or copied or used in whole or in part as the basis for the manufacture or sale of items without written permission.

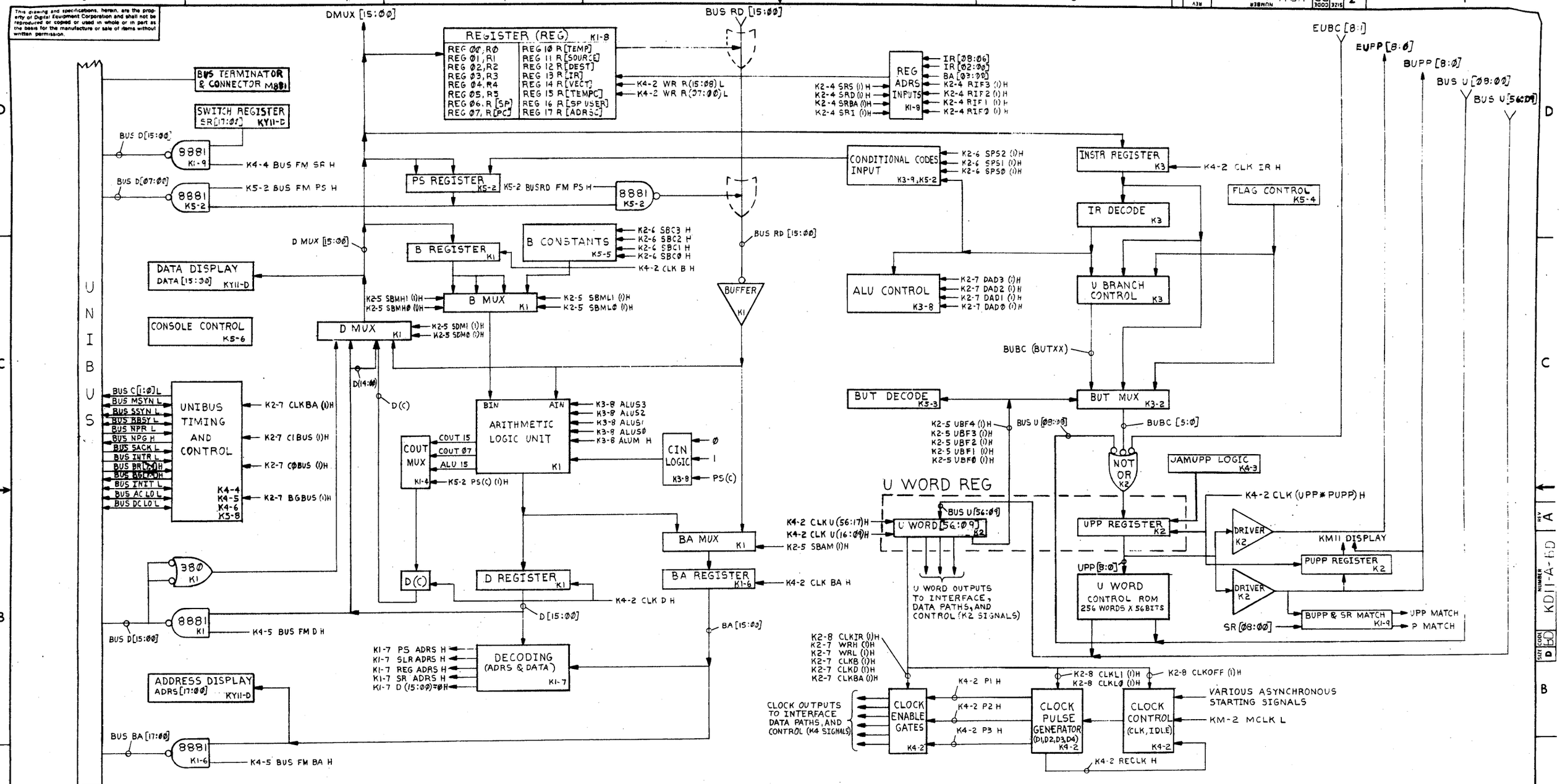

FIRST USED ON OPTION/MODEL	QTY.	DESCRIPTION	PART NO.	ITEM NO.
PDP11		PARTS LIST		

UNLESS OTHERWISE SPECIFIED DIMENSION IN INCHES. TOLERANCES

DECIMALS	ANGLES
.XXX ± .005	±0° 30'
.XX ± .02	
.X ± .1	

REMOVE BURRS AND BREAK SHARP CORNERS. SURFACE QUALITY ✓

MATERIAL —//—

FINISH —//—

		DATE
DRN.		7-21-72
CHK'D		9-25-72
ENG		9-25-72
PROJ. ENG.		9-25-72
MGR		9-25-72

NEXT HIGHER ASSY. B-DD-KD11-A

SCALE NONE

SHEET 1 OF 2

digital EQUIPMENT CORPORATION MAYNARD MASSACHUSETTS

TITLE KD11-A PROCESSOR (BLOCK DIAGRAM)

SIZE	CODE	NUMBER	REV.
D	BD	KD11-A-BD	A

DIST.

REVISIONS			
CHK	CHANGE NO.		REV
	KD11A-00005	6-9-73	A
	D. LOUGHLIN	2-14-73	

BRUNING 40.522 15M40

DEC FORM NO DRD 102-B

This drawing and specifications, herein, are the property of Digital Equipment Corporation and shall not be reproduced or copied or used in whole or in part as the basis for the manufacture or sale of items without written permission

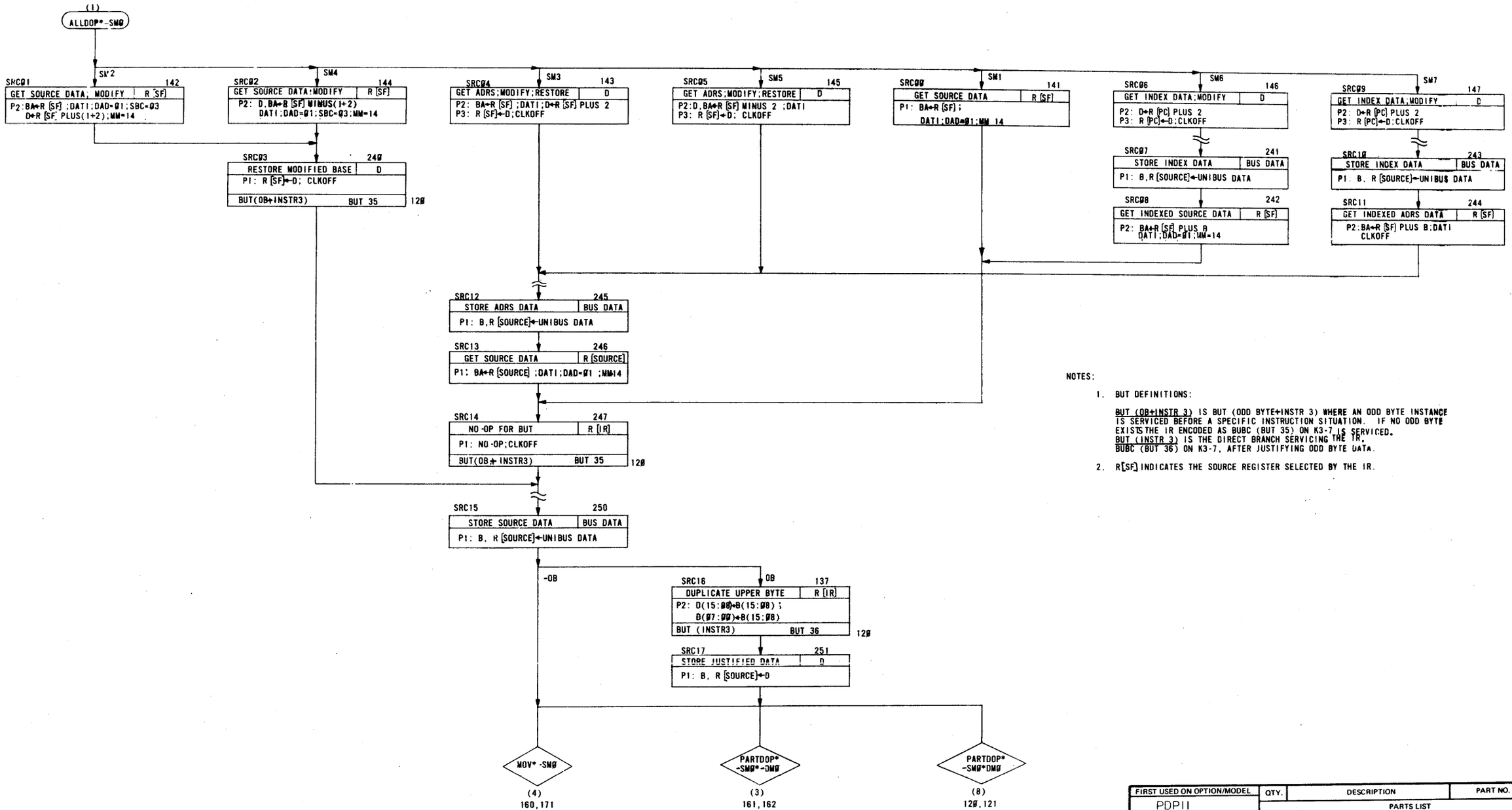

NOTES:

1. BUT DEFINITIONS:

   BUT (OB+INSTR 3) IS BUT (ODD BYTE+INSTR 3) WHERE AN ODD BYTE INSTANCE IS SERVICED BEFORE A SPECIFIC INSTRUCTION SITUATION. IF NO ODD BYTE EXISTS THE IR ENCODED AS BUBC (BUT 35) ON K3-7 IS SERVICED.
   BUT (INSTR 3) IS THE DIRECT BRANCH SERVICING THE IR.
   BUBC (BUT 36) ON K3-7, AFTER JUSTIFYING ODD BYTE DATA.

2. R[SF] INDICATES THE SOURCE REGISTER SELECTED BY THE IR.

FIRST USED ON OPTION/MODEL	QTY.	DESCRIPTION	PART NO.	ITEM NO.
PDP11		PARTS LIST		

UNLESS OTHERWISE SPECIFIED DIMENSION IN INCHES. TOLERANCES

DECIMALS	ANGLES
.XXX = .005 .XX = .02 .X = .1	±0° 30'

REMOVE BURRS AND BREAK SHARP CORNERS SURFACE QUALITY

MATERIAL

FINISH

DRN.	DATE 1-15-72	digital EQUIPMENT CORPORATION MAYNARD MASSACHUSETTS
CHK'D	DATE 1/25/72	
ENG.	DATE 1/25/72	TITLE FLOW DIAGRAM (SOURCE)
PROJ. ENG.	DATE 1/25/72	
PROD. ENG.	DATE 7-21-72	

NEXT HIGHER ASSY. B-DD-KDII-A

SCALE

SHEET 2 OF 12

SIZE	CODE	NUMBER	REV.
D	FD	KDII-A-FD	B

(2)

DIST.

REVISIONS: REV / CHANGE NO / CHK

DEC FORM NO DRD 102-B

This drawing and specifications herein, are the property of Digital Equipment Corporation and shall not be reproduced or copied or used in whole or in part as the basis for the manufacture or sale of items without written permission

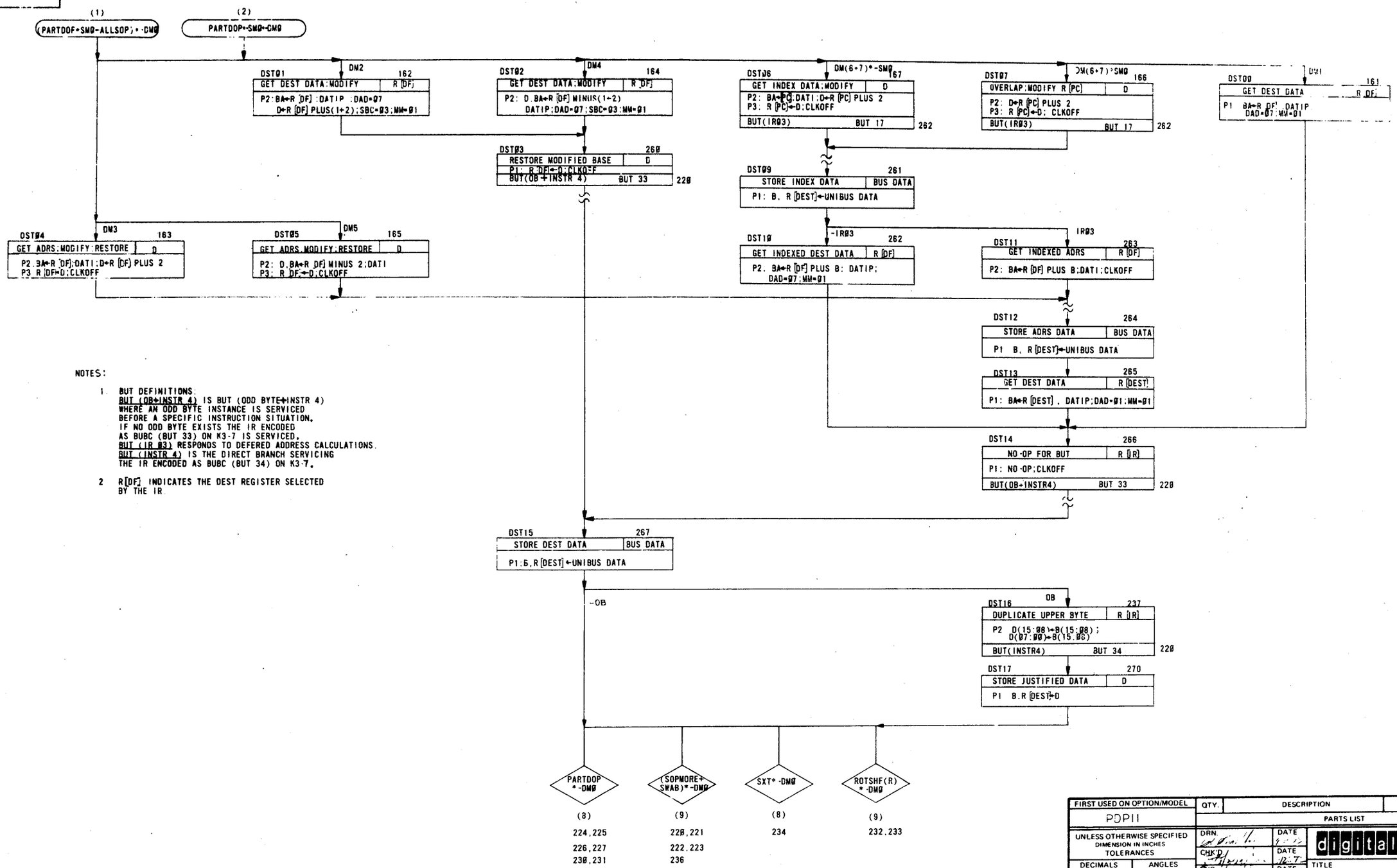

NOTES:

1. BUT DEFINITIONS:
   BUT (OB+INSTR 4) IS BUT (ODD BYTE+INSTR 4)
   WHERE AN ODD BYTE INSTANCE IS SERVICED
   BEFORE A SPECIFIC INSTRUCTION SITUATION.
   IF NO ODD BYTE EXISTS THE IR ENCODED
   AS BUBC (BUT 33) ON K3-7 IS SERVICED.
   BUT (IR Ø3) RESPONDS TO DEFERED ADDRESS CALCULATIONS.
   BUT (INSTR 4) IS THE DIRECT BRANCH SERVICING
   THE IR ENCODED AS BUBC (BUT 34) ON K3-7.

2. R[DF] INDICATES THE DEST REGISTER SELECTED
   BY THE IR

(8)	(9)	(8)	(9)
224,225	220,221	234	232,233
226,227	222,223		
230,231	236		

FIRST USED ON OPTION/MODEL	QTY.	DESCRIPTION	PART NO	ITEM NO
PDP11		PARTS LIST		

UNLESS OTHERWISE SPECIFIED DIMENSION IN INCHES TOLERANCES

DECIMALS	ANGLES
XXX ± .005	± 0° 30'
XX ± .02	
X ± .1	

REMOVE BURRS AND BREAK SHARP CORNERS SURFACE QUALITY

MATERIAL

FINISH

DRN. DATE
CHK'D DATE
ENG DATE
PROJ ENG DATE
PROD DATE

NEXT HIGHER ASSY: KD11-A

SCALE

SHEET 3 OF 12

digital EQUIPMENT CORPORATION MAYNARD MASSACHUSETTS

TITLE FLOW DIAGRAM (DECT)

(3)

SIZE	CODE	NUMBER	REV
D	FD	KD11-A-FD	B

DIST

REVISIONS: REV / CHANGE NO / CHK

DEC FORM NO DRD 102-B

This drawing and specifications herein are the property of Digital Equipment Corporation and shall not be reproduced or copied or used in whole or in part as the basis for the manufacture or sale of items without written permission.

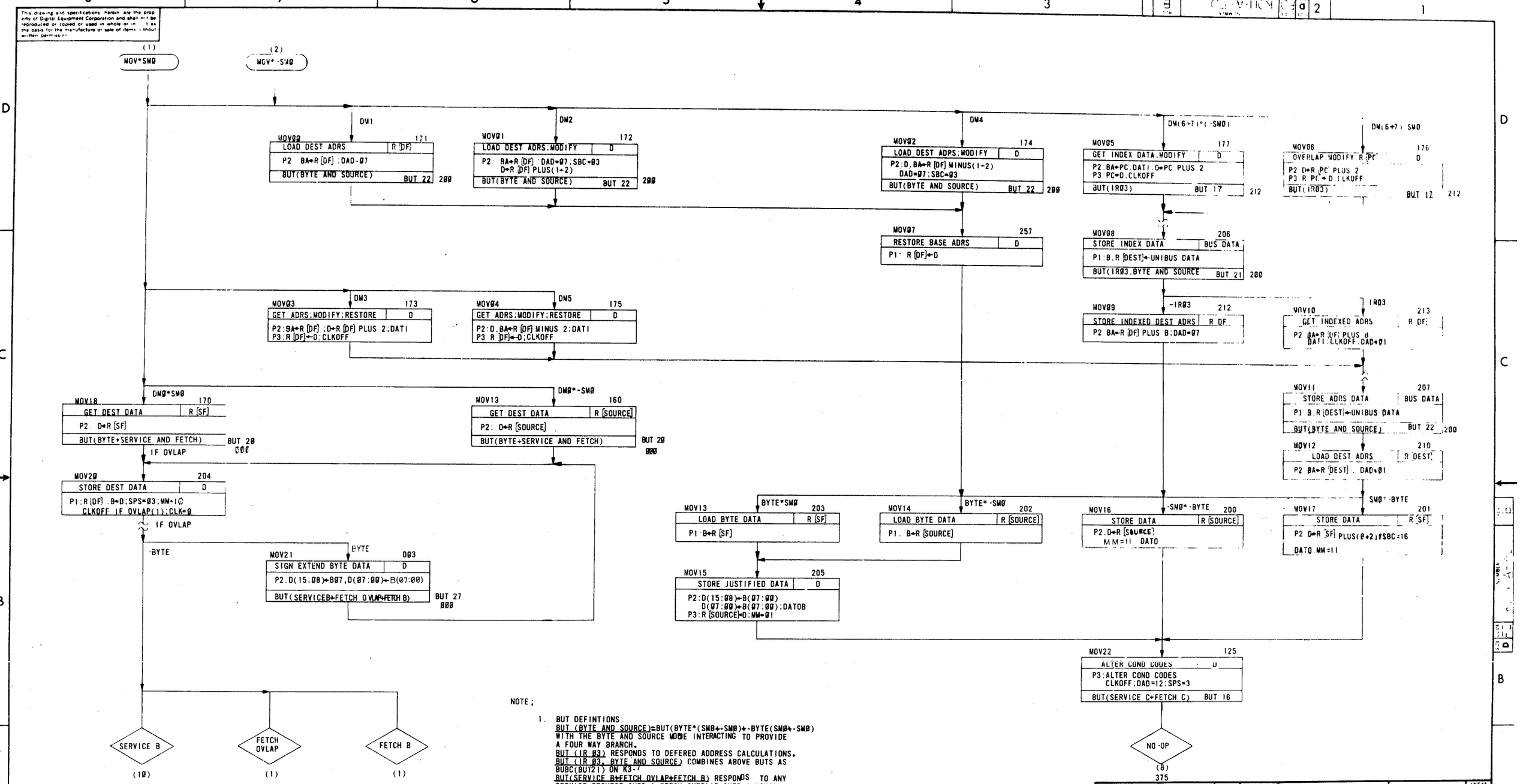

NOTE;

1. BUT DEFINITIONS:
BUT (BYTE AND SOURCE)=BUT(BYTE*(SMØ+-SMØ)+-BYTE(SMØ+-SMØ)
WITH THE BYTE AND SOURCE MODE INTERACTING TO PROVIDE
A FOUR WAY BRANCH.
BUT (IR Ø3) RESPONDS TO DEFERED ADDRESS CALCULATIONS.
BUT (IR Ø3, BYTE AND SOURCE) COMBINES ABOVE BUTS AS
BUBC(BUT21) ON K3-7
BUT(SERVICE B+FETCH OVLAP+FETCH B) RESPONDS TO ANY
SERVICE REQUEST OVER A FETCH OVERLAP OVER A USUAL
FETCH CYCLE REENTRY.
BUT (BYTE+SERVICE+FETCH) WILL JUSTIFY BYTE DATA PRIOR
TO THE SERVICE OR FETCH BUT NOTED ABOVE.

FIRST USED ON OPTION/MODEL	QTY.	DESCRIPTION	PART NO.	ITEM NO.
PDP11		PARTS LIST		

UNLESS OTHERWISE SPECIFIED DIMENSION IN INCHES TOLERANCES

DECIMALS	ANGLES
.XXX = .005	±0° 30'
.XX = .02	
.X = .1	

REMOVE BURRS AND BREAK SHARP CORNERS SURFACE QUALITY ✓

MATERIAL

FINISH

		DATE
DRN.		
CHK'D.		
ENG.		
PROJ. ENG.		
PROD.		

digital EQUIPMENT CORPORATION MAYNARD MASSACHUSETTS

TITLE FLOW DIAGRAM (MOV) (4)

NEXT HIGHER ASSY. B-DD-KD11-A

SCALE

SHEET 4 OF 12

SIZE	CODE	NUMBER	REV
D	FD	KD11-A-FD	B

DIST

REVISIONS: REV / CHANGE NO / CHK

DEC FORM NO DRD 102-B

This drawing and specifications, herein, are the property of Digital Equipment Corporation and shall not be reproduced or copied or used in whole or in part as the basis for the manufacture or sale of items without written permission

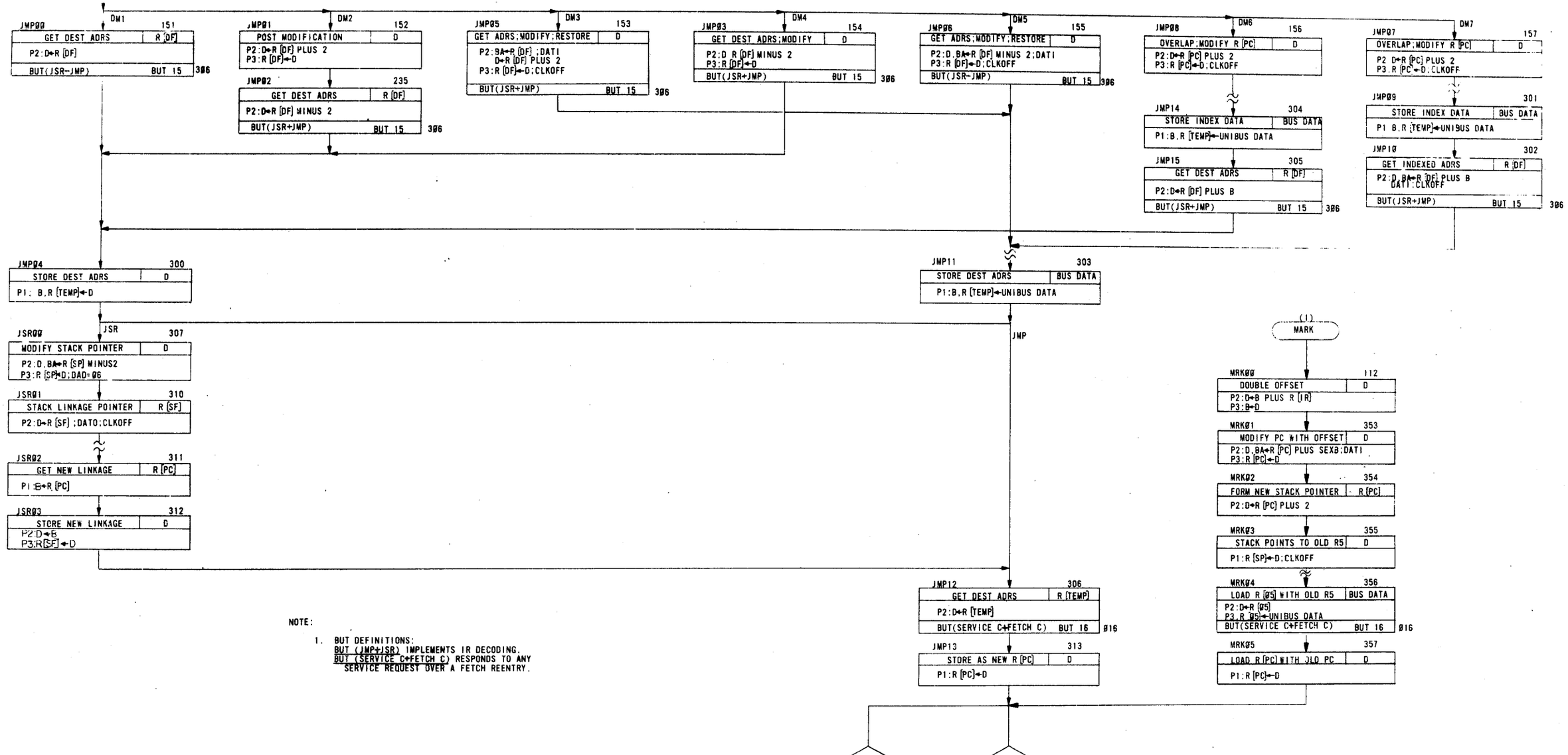

NOTE:

1. BUT DEFINITIONS:
   BUT (JMP+JSR) IMPLEMENTS IR DECODING.
   BUT (SERVICE C+FETCH C) RESPONDS TO ANY SERVICE REQUEST OVER A FETCH REENTRY.

FIRST USED ON OPTION/MODEL	QTY.	DESCRIPTION	PART NO.	ITEM NO.
PDP11		PARTS LIST		

UNLESS OTHERWISE SPECIFIED
DIMENSION IN INCHES
TOLERANCES

DECIMALS	ANGLES
.XXX = .005 .XX = .02 .X = .1	± 0° 30'

REMOVE BURRS AND BREAK SHARP CORNERS SURFACE QUALITY ✓

MATERIAL —/—/—

FINISH —/—/—

		DATE
DRN		1-1-72
CHK'D		1-2-72
ENG		1-2-72
PROJ ENG		1-2-72
PROD		1-2-72

NEXT HIGHER ASSY. B-DD-KDII-A

SCALE —/—

SHEET 5 OF 12

digital EQUIPMENT CORPORATION MAYNARD MASSACHUSETTS

TITLE FLOW DIAGRAM (JMP, JSR, MARK) (5)

SIZE	CODE	NUMBER	REV
D	FD	KDII-A-FD	B

NEXT ASSY.

REVISIONS: REV | CHANGE NO | CHK

DEC FORM NO DRD 102-B

This drawing and specifications herein are the property of Digital Equipment Corporation and shall not be reproduced or copied or used in whole or in part as the basis for the manufacture or sale of items without written permission

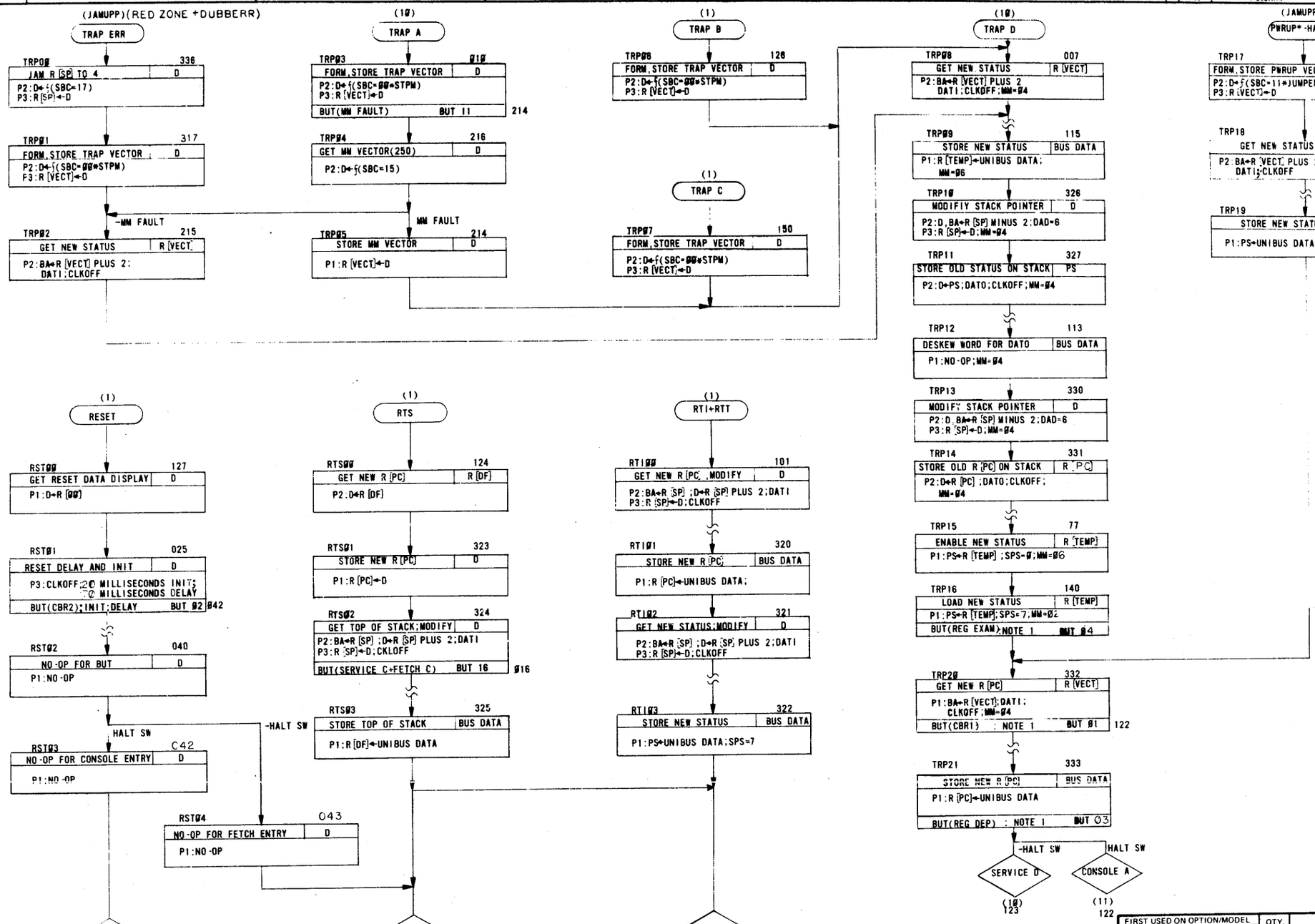

NOTES.

1. THESE WORKING BUT'S ARE USED TO SEQUENTIALLY CLEAR VARIOUS TRAP REQUEST FLAGS. EXCEPT FOR BUT (CBR1) THEY DO NOT BRANCH THE FLOW.

2. BUT DEFINITIONS:
   BUT (MM FAULT) IS ACTIVE FOR MEMORY MANAGEMENT FAULTS IN THE KT11-D OPTION.
   BUT (CBR2) SENSES THE HALT SWITCH FOR A CONSOLE BUS REQUEST, A RETURN TO FETCH OCCURS IF THE HALT SWITCH IS NOT ACTIVE. THIS WORKING BUT ACTIVATES THE INIT AND RESTART DELAY.
   BUT (SERVICE C+FETCH C) RESPONDS TO ANY SERVICE REQUEST OVER A FETCH REENTRY.
   BUT (CBR1) PROVIDES FOR DIRECT CONSOLE LOOP ENTRY IF THE HALT SWITCH IS ACTIVE. THIS DIFFERS FROM THE USUAL ENTRY INTO SERVICE FROM THE TRAP SEQUENCE. SEE NOTE 1 ALSO.
   BUT (REG EXAM) } SEE NOTE 1.
   BUT (REG DEP) }

FIRST USED ON OPTION/MODEL	QTY.	DESCRIPTION	PART NO.	ITEM NO.
PDP11		PARTS LIST		

UNLESS OTHERWISE SPECIFIED DIMENSION IN INCHES. TOLERANCES

DECIMALS	ANGLES
XXX = 005 XX = 02 X = 1	±0 30

REMOVE BURRS AND BREAK SHARP CORNERS SURFACE QUALITY

MATERIAL

FINISH

DRN. DATE 1-11-72
CHK'D DATE 7/25/72
ENG. DATE 1/25/72
PROJ. ENGR. DATE 7/25/72
PROD. DATE

digital EQUIPMENT CORPORATION MAYNARD MASSACHUSETTS

TITLE FLOW DIAGRAM TRAPS, PWRUP RESET, RTI, RTS, RTT (K)

NEXT HIGHER ASSY. E-CO-KD11-A

SCALE

SHEET 5 OF 12

SIZE	CODE	NUMBER	REV.
D	FD	KD11-A-FD	B

DIST.

REV	REVISIONS	CHANGE NO.	CHK

BRUNING 40 522 (5844)

DEC FORM NO. (DRD) 102-B

This drawing and specifications, herein, are the property of Digital Equipment Corporation and shall not be reproduced or copied or used in whole or in part as the basis for the manufacture or sale of items without written permission

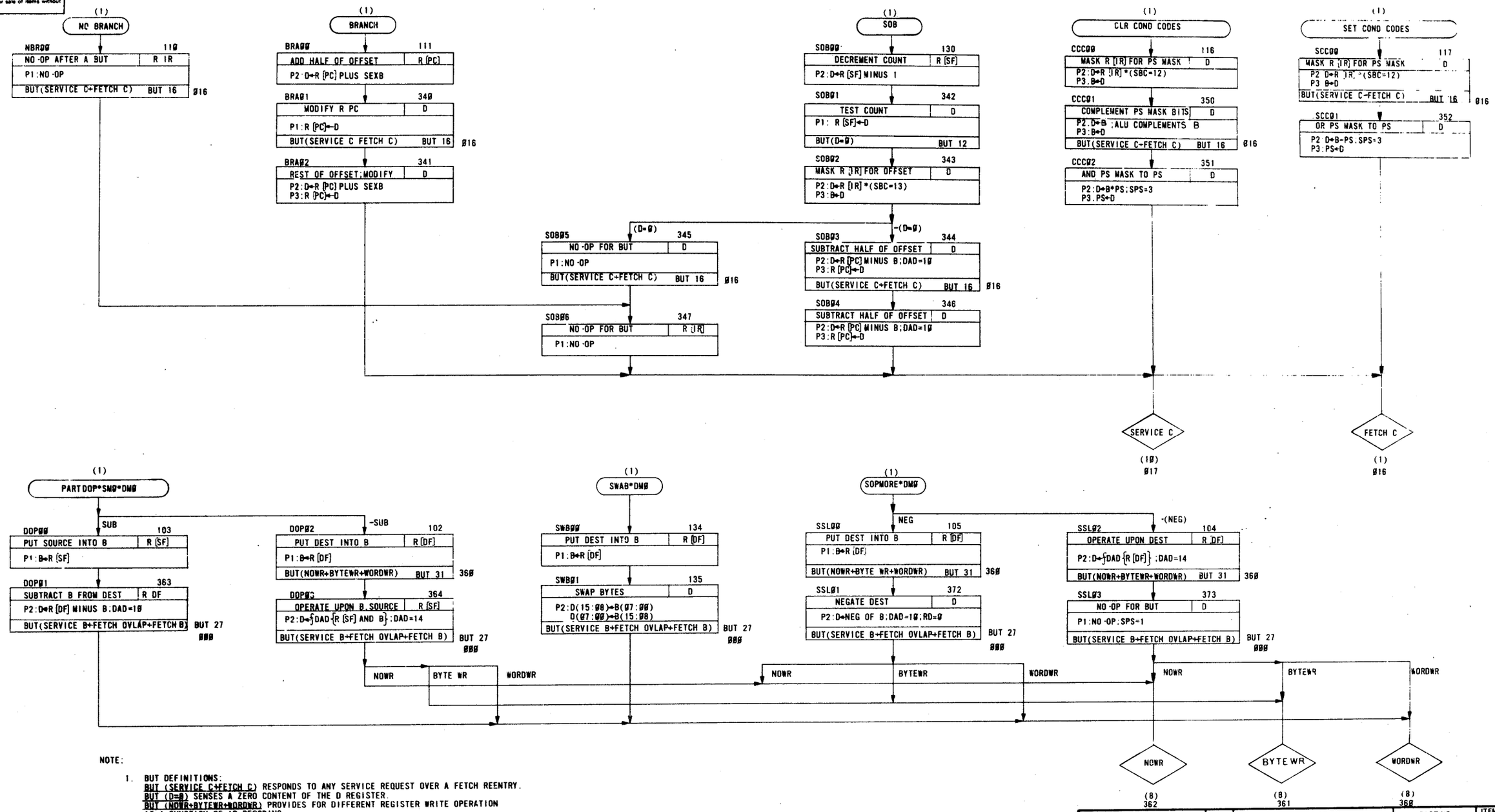

NOTE:

1. BUT DEFINITIONS:
   BUT (SERVICE C+FETCH C) RESPONDS TO ANY SERVICE REQUEST OVER A FETCH REENTRY.
   BUT (D=0) SENSES A ZERO CONTENT OF THE D REGISTER.
   BUT (NOWR+BYTEWR+WORDWR) PROVIDES FOR DIFFERENT REGISTER WRITE OPERATION AS A FUNCTION OF IR DECODING.
   BUT (SERVICE B+FETCH OVLAP+FETCH B) RESPONDS TO ANY SERVICE REQUEST OVER A FETCH OVLAP OVER A USUAL FETCH REENTRY.

FIRST USED ON OPTION/MODEL	QTY.	DESCRIPTION	PART NO.	ITEM NO.
PDP11		PARTS LIST		

UNLESS OTHERWISE SPECIFIED DIMENSION IN INCHES TOLERANCES

DECIMALS	ANGLES
.XXX = .005	±0° 30'
.XX = .02	
.X = .1	

REMOVE BURRS AND BREAK SHARP CORNERS SURFACE QUALITY ✓

MATERIAL —

FINISH —

DRN. DATE 1-15-72
CHK'D DATE 1/25/72
ENG. DATE 1/27/72
PROJ. ENG. DATE 1/27/72
PROD. DATE 1-31-72

digital EQUIPMENT CORPORATION MAYNARD MASSACHUSETTS

TITLE FLOW DIAGRAM BR.SOB.CODES. PARTDOP SWAB SOPMORE } DM0 (7)

NEXT HIGHER ASSY. B-DD-KD11-A

SIZE D CODE FD NUMBER KD11-A-FD REV. B

SCALE —

SHEET 7 OF 12

DIST

REVISIONS: CHANGE NO. HIST. CHK

DEC FORM NO DRD 102-B

This drawing and specifications, herein, are the property of Digital Equipment Corporation and shall not be reproduced or copied or used in whole or in part as the basis for the manufacture or sale of items without written permission.

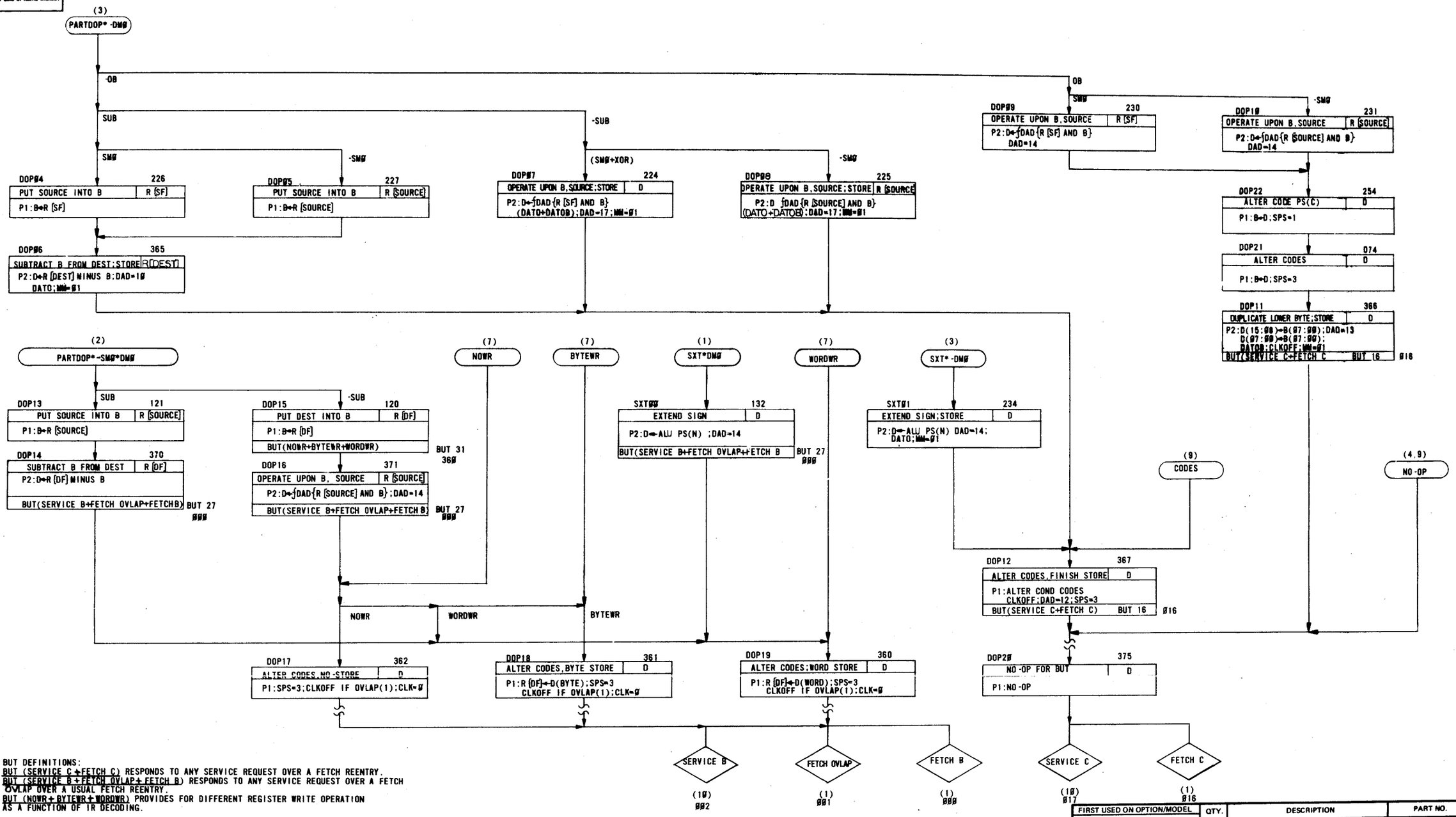

NOTE:

1. BUT DEFINITIONS:
   BUT (SERVICE C+FETCH C) RESPONDS TO ANY SERVICE REQUEST OVER A FETCH REENTRY.
   BUT (SERVICE B+FETCH OVLAP+FETCH B) RESPONDS TO ANY SERVICE REQUEST OVER A FETCH OVLAP OVER A USUAL FETCH REENTRY.
   BUT (NOWR+BYTEWR+WORDWR) PROVIDES FOR DIFFERENT REGISTER WRITE OPERATION AS A FUNCTION OF IR DECODING.

FIRST USED ON OPTION/MODEL	QTY.	DESCRIPTION	PART NO.	ITEM NO.
PDP11		PARTS LIST		

UNLESS OTHERWISE SPECIFIED DIMENSION IN INCHES. TOLERANCES

DECIMALS	ANGLES
.XXX = .005 .XX = .02 .X = .1	±0° 30'

REMOVE BURRS AND BREAK SHARP CORNERS SURFACE QUALITY ✓

MATERIAL

FINISH

		DATE
DRN.		4-15-72
CHK'D		7/25/72
ENG.		7/25/72
PROJ. ENG.		7/25/72
PRODUCT		7-27-72

digital EQUIPMENT CORPORATION MAYNARD MASSACHUSETTS

TITLE FLOW DIAGRAM (PARTDOP, SXT)

(8)

NEXT HIGHER ASSY. B-DD-KDII-A

SCALE

SHEET 8 OF 12

SIZE	CODE	NUMBER	REV.
D	FD	KDII-A-FD	B

DIST.

REVISIONS: REV | CHANGE NO | CHK

DEC FORM NO DRD 102-B

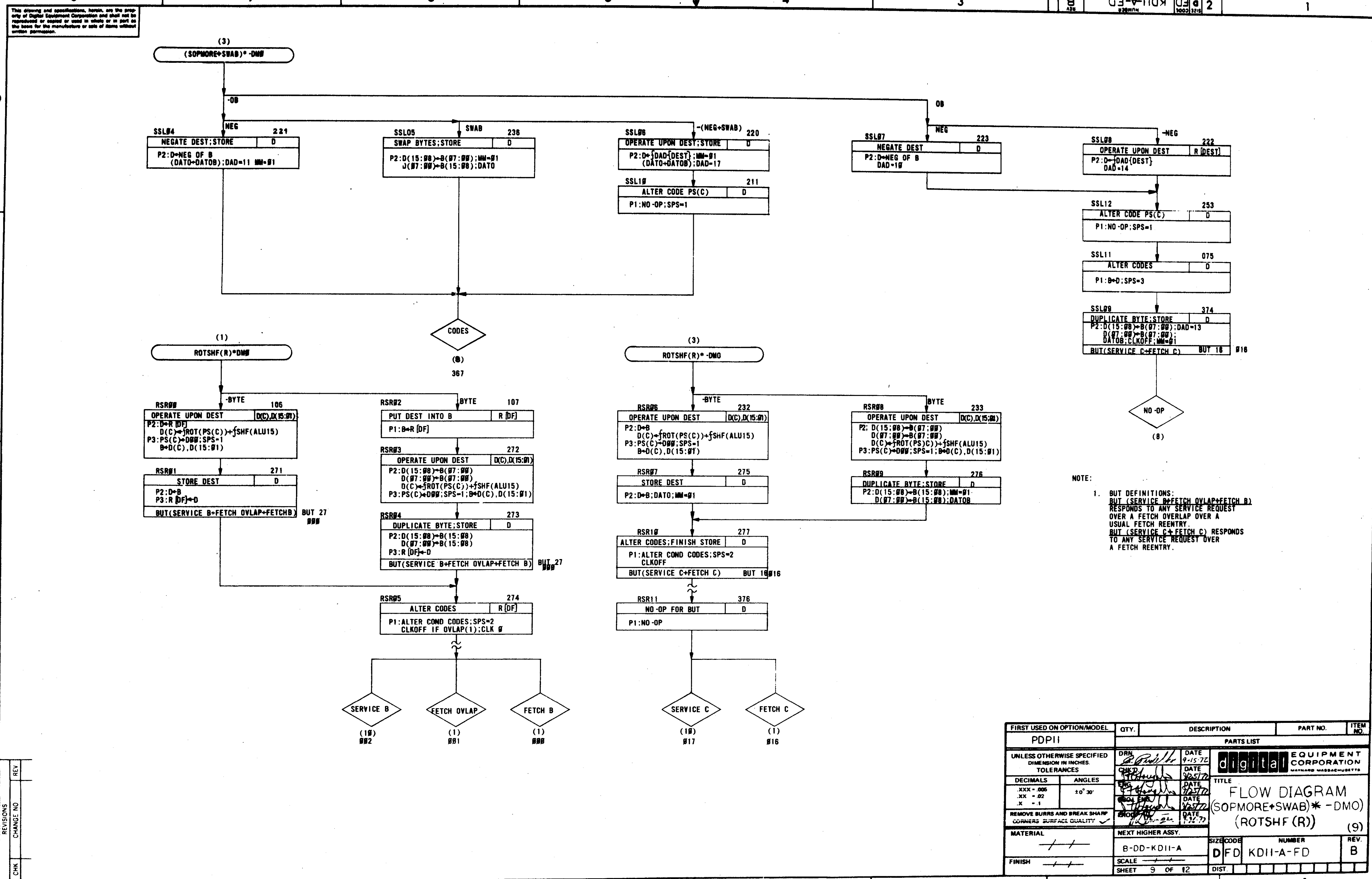

This drawing and specifications, herein, are the property of Digital Equipment Corporation and shall not be reproduced or copied or used in whole or in part as the basis for the manufacture or sale of items without written permission.
(3)
(SOPMORE+SWAB)*·DMØ
-DB
DB
NEG
SSLØ4 221
NEGATE DEST;STORE D
P2:D←NEG OF B
(DATO+DATOB);DAD=11 MM=Ø1
SWAB
SSLO5 236
SWAP BYTES;STORE D
P2:D(15:Ø8)←B(Ø7:ØØ);MM=Ø1
D(Ø7:ØØ)←B(15:Ø8);DATO
-(NEG+SWAB) 220
SSLØ6
OPERATE UPON DEST;STORE D
P2:D←ƒDAD{DEST};MM=Ø1
(DATO+DATOB);DAD=17
SSL1Ø 211
ALTER CODE PS(C) D
P1:NO-OP;SPS=1
SSLØ7 223
NEGATE DEST D
P2:D←NEG OF B
DAD=1Ø
-NEG
SSLØ8 222
OPERATE UPON DEST R[DEST]
P2:D←ƒDAD{DEST}
DAD=14
SSL12 253
ALTER CODE PS(C) D
P1:NO-OP;SPS=1
SSL11 075
ALTER CODES D
P1:B←D;SPS=3
SSLØ9 374
DUPLICATE BYTE;STORE D
P2:D(15:Ø8)←B(Ø7:ØØ);DAD=13
D(Ø7:ØØ)←B(Ø7:ØØ);
DATOB;CLKOFF;MM=Ø1
BUT(SERVICE C+FETCH C) BUT 16 Ø16
NO-OP
(8)
CODES
(8)
367
(1)
ROTSHF(R)*DMØ
-BYTE
RSRØØ 106
OPERATE UPON DEST D(C),D(15:Ø1)
P2:D←R[DF]
D(C)←ƒROT(PS(C))+ƒSHF(ALU15)
P3:PS(C)←DØØ;SPS=1
B←D(C),D(15:Ø1)
RSRØ1 271
STORE DEST D
P2:D←B
P3:R[DF]←D
BUT(SERVICE B+FETCH OVLAP+FETCHB) BUT 27 ØØØ
BYTE
RSRØ2 107
PUT DEST INTO B R[DF]
P1:B←R[DF]
RSRØ3 272
OPERATE UPON DEST D(C),D(15:Ø1)
P2:D(15:Ø8)←B(Ø7:ØØ)
D(Ø7:ØØ)←B(Ø7:ØØ)
D(C)←ƒROT(PS(C))+ƒSHF(ALU15)
P3:PS(C)←DØØ;SPS=1;B←D(C),D(15:Ø1)
RSRØ4 273
DUPLICATE BYTE;STORE D
P2:D(15:Ø8)←B(15:Ø8)
D(Ø7:ØØ)←B(15:Ø8)
P3:R[DF]←D
BUT(SERVICE B+FETCH OVLAP+FETCH B) BUT 27 ØØØ
RSRØ5 274
ALTER CODES R[DF]
P1:ALTER COND CODES;SPS=2
CLKOFF IF OVLAP(1);CLK Ø
SERVICE B
(1Ø)
ØØ2
FETCH OVLAP
(1)
ØØ1
FETCH B
(1)
ØØØ
(3)
ROTSHF(R)*·DMO
-BYTE
RSRØ6 232
OPERATE UPON DEST D(C),D(15:Ø1)
P2:D←B
D(C)←ƒROT(PS(C))+ƒSHF(ALU15)
P3:PS(C)←DØØ;SPS=1
B←D(C),D(15:Ø1)
RSRØ7 275
STORE DEST D
P2:D←B;DATO;MM=Ø1
BYTE
RSRØ8 233
OPERATE UPON DEST D(C),D(15:Ø1)
P2; D(15:Ø8)←B(Ø7:ØØ)
D(Ø7:ØØ)←B(Ø7:ØØ)
D(C)←ƒROT(PS)C))+ƒSHF(ALU15)
P3:PS(C)←DØØ;SPS=1;B←D(C),D(15:Ø1)
RSRØ9 276
DUPLICATE BYTE;STORE D
P2:D(15:Ø8)←B(15:Ø8);MM=Ø1
D(Ø7:ØØ)←B(15:Ø8);DATOB
RSR1Ø 277
ALTER CODES;FINISH STORE D
P1:ALTER COND CODES;SPS=2
CLKOFF
BUT(SERVICE C+FETCH C) BUT 16 Ø16
RSR11 376
NO-OP FOR BUT D
P1:NO-OP
SERVICE C
(1Ø)
Ø17
FETCH C
(1)
Ø16
NOTE:
1. BUT DEFINITIONS:
BUT (SERVICE B+FETCH OVLAP+FETCH B)
RESPONDS TO ANY SERVICE REQUEST
OVER A FETCH OVERLAP OVER A
USUAL FETCH REENTRY.
BUT (SERVICE C+FETCH C) RESPONDS
TO ANY SERVICE REQUEST OVER
A FETCH REENTRY.
FIRST USED ON OPTION/MODEL
PDP11
QTY. DESCRIPTION PART NO. ITEM NO.
PARTS LIST
UNLESS OTHERWISE SPECIFIED
DIMENSION IN INCHES.
TOLERANCES
DECIMALS ANGLES
.XXX ±.005 ±0° 30'
.XX ±.02
.X ±.1
REMOVE BURRS AND BREAK SHARP CORNERS SURFACE QUALITY
MATERIAL
FINISH
DRN DATE 9-15-72
CHK'D DATE
ENG DATE
PROJ ENG DATE
PROD DATE
NEXT HIGHER ASSY.
B-DD-KD11-A
SCALE
SHEET 9 OF 12
digital EQUIPMENT CORPORATION MAYNARD MASSACHUSETTS
TITLE
FLOW DIAGRAM
(SOPMORE+SWAB)* -DMO)
(ROTSHF (R))
(9)
SIZE D CODE FD NUMBER KD11-A-FD REV. B
DIST.
REVISIONS REV CHANGE NO CHK
DEC FORM NO DRD 102-B

This drawing and specifications, herein, are the property of Digital Equipment Corporation and shall not be reproduced or copied or used in whole or in part as the basis for the manufacture or sale of items without written permission

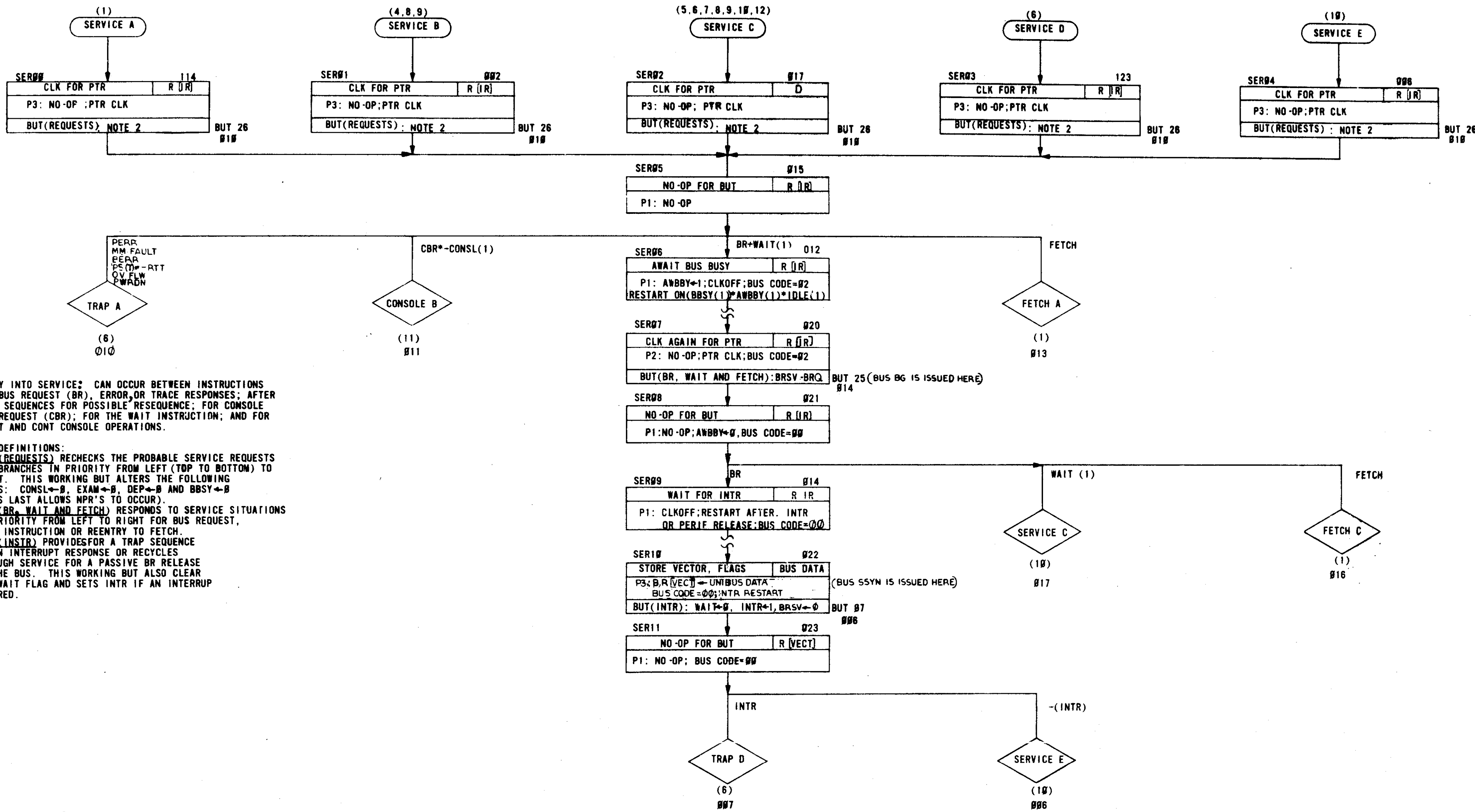

NOTES:

1. ENTRY INTO SERVICE: CAN OCCUR BETWEEN INSTRUCTIONS FOR BUS REQUEST (BR), ERROR OR TRACE RESPONSES; AFTER TRAP SEQUENCES FOR POSSIBLE RESEQUENCE; FOR CONSOLE BUS REQUEST (CBR); FOR THE WAIT INSTRUCTION; AND FOR START AND CONT CONSOLE OPERATIONS.

2. BUT DEFINITIONS:
   BUT (REQUESTS) RECHECKS THE PROBABLE SERVICE REQUESTS AND BRANCHES IN PRIORITY FROM LEFT (TOP TO BOTTOM) TO RIGHT. THIS WORKING BUT ALTERS THE FOLLOWING FLAGS: CONSL←Ø, EXAM←Ø, DEP←Ø AND BBSY←Ø (THIS LAST ALLOWS NPR'S TO OCCUR).
   BUT (BR, WAIT AND FETCH) RESPONDS TO SERVICE SITUATIONS IN PRIORITY FROM LEFT TO RIGHT FOR BUS REQUEST, WAIT INSTRUCTION OR REENTRY TO FETCH.
   BUT (INSTR) PROVIDES FOR A TRAP SEQUENCE AS AN INTERRUPT RESPONSE OR RECYCLES THROUGH SERVICE FOR A PASSIVE BR RELEASE OF THE BUS. THIS WORKING BUT ALSO CLEAR THE WAIT FLAG AND SETS INTR IF AN INTERRUP OCCURED.

FIRST USED ON OPTION/MODEL	QTY.	DESCRIPTION	PART NO.	ITEM NO.
PDP11		PARTS LIST		

UNLESS OTHERWISE SPECIFIED DIMENSION IN INCHES. TOLERANCES
DECIMALS .XXX = .005 .XX = .02 .X = .1 — ANGLES ±0° 30'
REMOVE BURRS AND BREAK SHARP CORNERS SURFACE QUALITY
MATERIAL
FINISH

DRN. DATE 9-15-72
CHK'D DATE 9/25/72
ENG. DATE 9/25/72
PROJ. ENG. DATE 9/25/72
PROD. DATE

NEXT HIGHER ASSY. B-DD-KD11-A
SCALE
SHEET 10 OF 12

DIGITAL EQUIPMENT CORPORATION MAYNARD MASSACHUSETTS

TITLE FLOW DIAGRAM (SERVICE) (1Ø)

SIZE D CODE FD NUMBER KD11-A-FD REV. B

DIST.

REVISIONS: REV / CHANGE NO / CHK

DEC FORM NO DRD 102-B

This drawing and specifications, herein, are the property of Digital Equipment Corporation and shall not be reproduced or copied or used in whole or in part as the basis for the manufacture or sale of items without written permission.

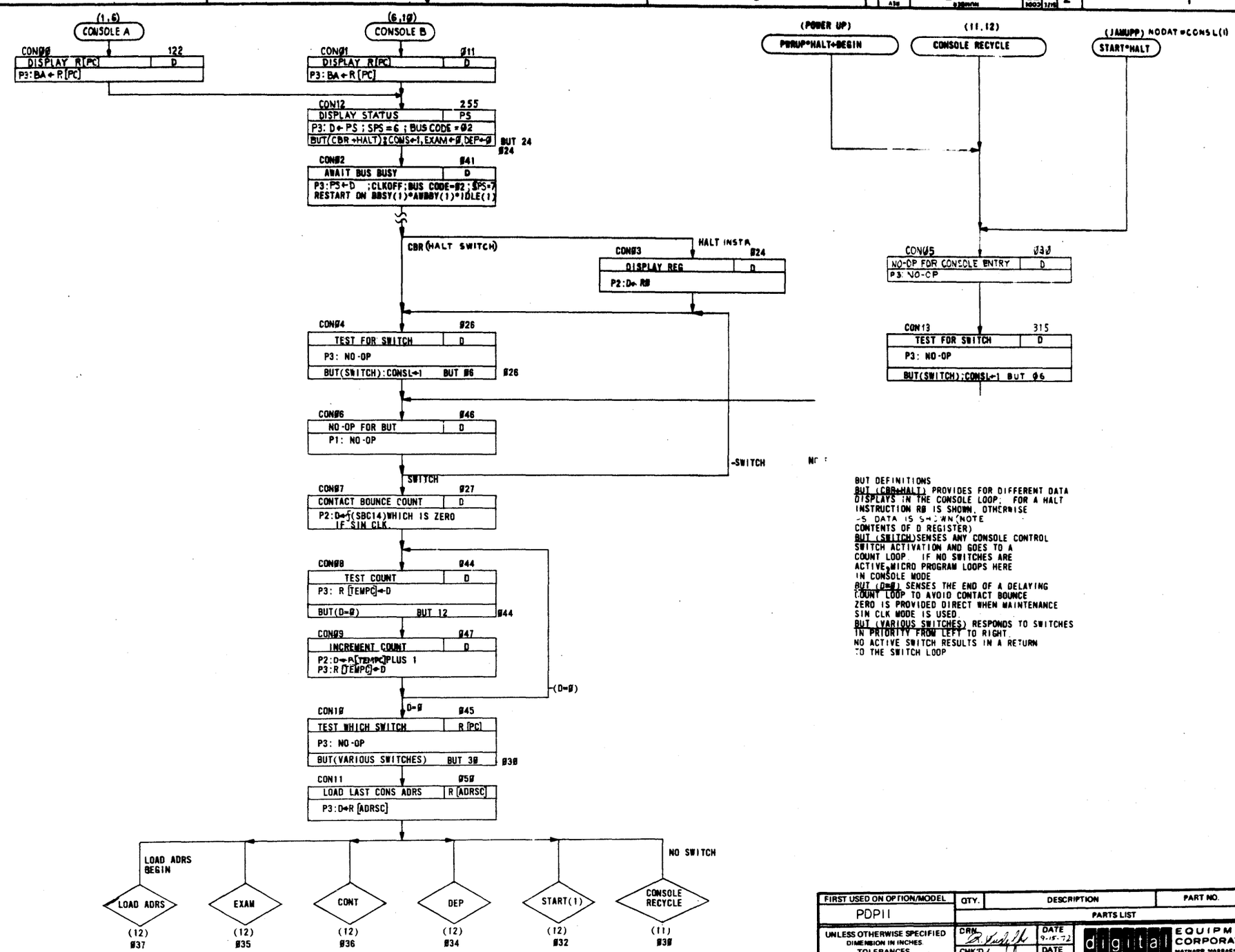

BUT DEFINITIONS
BUT (CBR+HALT) PROVIDES FOR DIFFERENT DATA DISPLAYS IN THE CONSOLE LOOP: FOR A HALT INSTRUCTION R0 IS SHOWN, OTHERWISE -S DATA IS SHOWN (NOTE CONTENTS OF D REGISTER)
BUT (SWITCH) SENSES ANY CONSOLE CONTROL SWITCH ACTIVATION AND GOES TO A COUNT LOOP. IF NO SWITCHES ARE ACTIVE, MICRO PROGRAM LOOPS HERE IN CONSOLE MODE
BUT (D=0) SENSES THE END OF A DELAYING COUNT LOOP TO AVOID CONTACT BOUNCE ZERO IS PROVIDED DIRECT WHEN MAINTENANCE SIN CLK MODE IS USED.
BUT (VARIOUS SWITCHES) RESPONDS TO SWITCHES IN PRIORITY FROM LEFT TO RIGHT. NO ACTIVE SWITCH RESULTS IN A RETURN TO THE SWITCH LOOP

FIRST USED ON OPTION/MODEL	QTY.	DESCRIPTION	PART NO.	ITEM NO.
PDP11		PARTS LIST		

UNLESS OTHERWISE SPECIFIED DIMENSION IN INCHES TOLERANCES

DECIMALS	ANGLES
.XXX ± .005 .XX ± .02 .X ± .1	±0° 30'

REMOVE BURRS AND BREAK SHARP CORNERS. SURFACE QUALITY ✓

MATERIAL —/—

FINISH —/—

		DATE
DRN		9-15-72
CHK'D		9/25/72
ENG		9/25/72
MGR ENG		9/25/72
PROJ		9-21-72

digital EQUIPMENT CORPORATION MAYNARD MASSACHUSETTS

TITLE FLOW DIAGRAM (CONSOLE LOOP) (11)

NEXT HIGHER ASSY. B-DD-KD11-A

SCALE —/—

SHEET 11 OF 12

SIZE D CODE FD NUMBER KD11-A-FD REV. B

DIST.

REVISIONS | REV | CHANGE NO | CHK

DEC FORM NO DRD 102-R

This drawing and specifications, herein, are the property of Digital Equipment Corporation and shall not be reproduced or copied or used in whole or in part as the basis for the manufacture or sale of items without written permission

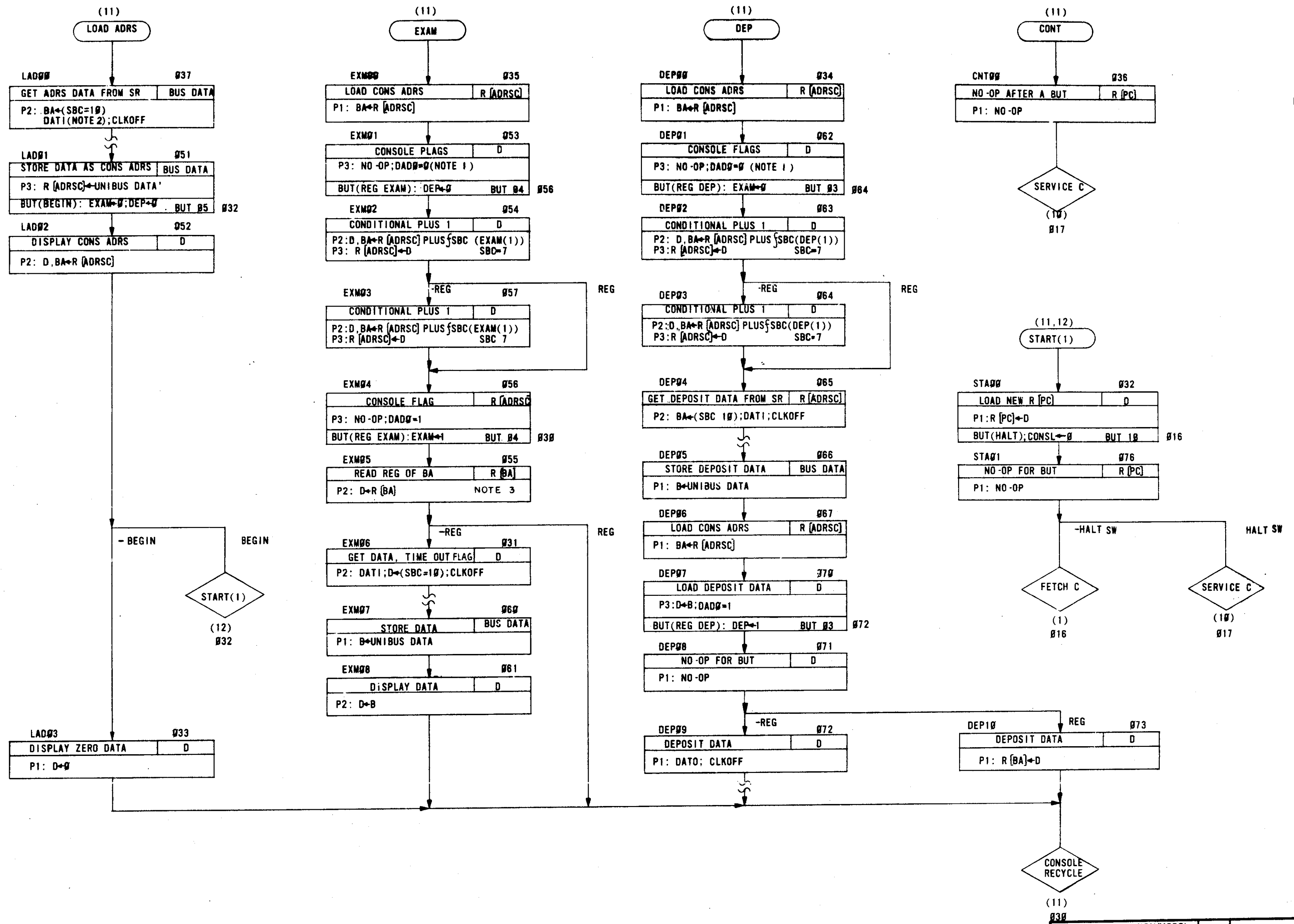

NOTES:

1. BUT DEFINITIONS.
   BUT (BEGIN) IS A WORKING BUT THAT CLEARS THE EXAM AND DEP FLAGS AND REACTS TO A BEGIN SWITCH BY SEQUENCING A START OPERATION.
   BUT (REG EXAM) RESPONSES TO REG CONSOLE OPERATION FOR PROPER INCREMENTATION AND DATA DISPLAY. THIS WORKING BUT ALSO ORDERS INCREMENTING FLAGS.
   BUT (REG DEP) RESPONDS TO REG CONSOLE OPERATION FOR PROPER INCREMENTATION AND DATA STORAGE. THIS WORKING BUT ALSO ORDERS INCREMENTING FLAGS.
   BUT (HALT) SENSES THE HALT SWITCH AND EITHER GOES TO FETCH (ENABLE POSITION) OR THROUGH SERVICE TO CONSOLE (HALT POSITION).
2. PROCESSOR RESPONSES TO SR ADDRESS (PROVIDED BY SBC=1Ø) UNLESS BEGIN SWITCH INPUT IS ACTIVE.
3. REGISTER SELECTION AS A FUNCTION OF BA [Ø3=ØØ].

FIRST USED ON OPTION/MODEL	QTY.	DESCRIPTION	PART NO.	ITEM NO.
PDP11		PARTS LIST		

UNLESS OTHERWISE SPECIFIED DIMENSION IN INCHES. TOLERANCES
DECIMALS: .XXX = .005, .XX = .02, .X = .1 — ANGLES: ± 0° 30'
REMOVE BURRS AND BREAK SHARP CORNERS SURFACE QUALITY
MATERIAL
FINISH

DRN DATE 9-15-72 · CHK'D DATE 3/25/72 · ENG. DATE 3/25/72 · PROJ. ENG. DATE 3/25/72 · PROD. DATE

NEXT HIGHER ASSY. B-DD-KD11-A

SCALE — SHEET 12 OF 12

DIGITAL EQUIPMENT CORPORATION MAYNARD MASSACHUSETTS

TITLE: FLOW DIAGRAM (CONSOLE SWITCHES) (12)

SIZE D · CODE FD · NUMBER KD11-A-FD · REV. B

REVISIONS: REV · CHANGE NO. · CHK

DEC FORM NO DRD 100-A

DIGITAL EQUIPMENT CORPORATION
MAYNARD, MASSACHUSETTS

PARTS LIST

MADE BY R. PUDELKO	CHECKED J.T. Loughlin	SECTION
DATE 9/15/72	DATE 9/27/72	
ENG J.T. Loughlin	PROD [illegible]	ISSUED SECT.
DATE 9/27/72	DATE 9/[illegible]	

ITEM NO	DWG NO. / PART NO.	DESCRIPTION	QUANTITY VARIATION KD11-A
1	D-AD-7010230-0-0	WIRED ASSY (KD11-A)	1
2	D-CS-M7231-Ø-1	DATA PATHS	1
3	D-CS-M7232-Ø-1	U WORD	1
4	D-CS-M7233-Ø-1	IR DECODE	1
5	D-CS-M7234-Ø-1	TIMING	1
6	D-CS-M7235-Ø-1	STATUS	1
7	D-UA-M981-Ø-Ø	INTERNAL UNIBUS ASSY	1
8	D-MU-KD11-A-MU	MODULE UTILIZATION	REF
9	A-PL-KT11-D-Ø	MEMORY MANAGEMENT	REF
10	A-PL-KJ11-A-Ø	STACK LIMIT REGISTER	REF
11	D-UA-KE11-E-Ø	KE11-E ASSY	REF
12	D-PL-KE11-F-Ø	KE11-F ASSY	REF
13	A-PL-KW11-L-Ø	LINE FREQUENCY CLOCK	REF
14	A-PL-KM11-Ø-Ø	MAINTENANCE PANEL (W130, W131)	REF
15	A-SS-55Ø9Ø81-Ø-12	SILK SCREEN (KD11-A)	REF
16	A-SS-55Ø9Ø81-Ø-13	SILK SCREEN (KT11-D, KE11-E, F)	REF
17	A-PL-KY11-D-Ø	KY11-D CONSOLE	REF
18	C-CS-M93Ø-Ø-1	BUS TERMINATOR M93Ø	1

TITLE	ASSY NO.	SIZE	CODE	NUMBER	REV	ECO NO
KD11-A PROCESSOR	11	A	PL	KD11-A-Ø	A	KD11A-C0011
	SHEET 1 OF 1	DIST	G			

DEC FORM DEC 16 (325) 1031 N870
DRA 110

This drawing and specifications, herein, are the property of Digital Equipment Corporation and shall not be reproduced or copied or used in whole or in part as the basis for the manufacture or sale of items without written permission.

VIEW FROM WIRING SIDE

Slot	Module	Section A–D	Section E	Section F
9	M981 CABLE	INTERNAL UNIBUS AND TERMINATOR	SMALL PERIPHERAL CONTROLLER (OPTIONAL) SEE NOTE 3 SEE NOTE 4 (sections C–F)	
8	M7236	MEMORY MANAGEMENT (OPTIONAL) KT11-D		
7	M7234	TIMING		
6	M7235	STATUS		
5	M7233	IR DECODE		
4	M7231	DATA PATHS		
3	M7232	U WORD	M7237 (OPTIONAL) KJ11-A OR KT11-D SEE NOTE 2	M787 (OPTIONAL) KW11-L SEE NOTE 2
2	M7238	EIS BOARD (OPTIONAL) KE11-E		
1	M7239	FIS BOARD (OPTIONAL) KE11-F	W130 (OPTIONAL) KM11 FOR KD11A PROCESSOR OPTIONS SEE NOTE 2	W130 (OPTIONAL) KM11 FOR BASIC KD11A PROCESSOR SEE NOTE 2

NOTES:

1. VIEW OF LOGIC PANEL IS FROM WIRING SIDE.
2. PREWIRED MODULE SLOTS FOR NOTED OPTIONS.
3. THE SMALL PERIPHERAL CONTROLLER SLOT (SLOT 09, SECTIONS C,D,E AND F) MAY CONTAIN A VARIETY OF PDP11 OPTIONS. THE OPTION USUALLY CONSIST OF A SINGLE QUAD MODULE BOARD (SECTION C,D,E AND F). IT MAY CONSIST OF A DOUBLE HEIGHT CONTROLLER BOARD (SECTIONS C AND D) WITH A M105 ADDRESS SELECTOR MODULE (SECTION E) AND A M7821 INTERRUPT CONTROL MODULE (SECTION F).
4. IF NO OPTION IS PRESENT IN THE SMALL PERIPHERAL CONTROLLER SLOT, A G727 GRANT CONTINUITY MODULE MUST BE INSERTED INTO SECTION D.

QTY.	DESCRIPTION	PART NO.	ITEM NO.

PARTS LIST

FIRST USED ON OPTION/MODEL: PDP 11

DO NOT SCALE DRAWING. UNLESS OTHERWISE SPECIFIED DIMENSION IN INCHES. TOLERANCES: DECIMALS ±.005, FRACTIONS ±1/64, ANGLES ±0°30'. FINAL SURFACE QUALITY. REMOVE BURRS AND BREAK SHARP CORNERS.

MATERIAL: — FINISH: —

DRN. DATE 9-5-72; CHKD. DATE 9-28-72; DATE 9-27-72; DATE 9-28-72; PROD. DATE 9-28-72

NEXT HIGHER ASSY: A-PL-KD11-A-0

digital EQUIPMENT CORPORATION, MAYNARD, MASSACHUSETTS

TITLE: MODULE UTILIZATION

SIZE D, CODE MU, NUMBER KD11-A-MU, REV. A

SCALE NONE — SHEET 1 OF 1

REVISIONS: REV A, CHANGE NO. KD11A-00005, O'LOUGHLIN 2-15-73

DEC FORM NO. DRD 100

This drawing and specifications, herein, are the property of Digital Equipment Corporation and shall not be reproduced or copied or used in whole or in part as the basis for the manufacture or sale of items without written permission.

NOTES:

1. PIN NOTATION THROUGHOUT IS ORDERED UPON MODULE PLACEMENT IN THE KD11-A PROCESSOR. MODULE REFERENCE ALONE IS OBTAINED BY DELETING THE NUMBER (SLOT LOCATION) AFTER THE FIRST LETTER
2. ALL SIGNALS THAT HAVE MODULE PINS ARE SO NOTED. OUTPUT SIGNALS WITH MODULE PINS ARE BROUGHT TO THE RIGHT SIDE OF THE PRINT.
3. PROCESSOR SIGNAL PREFIX NOTATION (K2-1 FOR EXAMPLE) IDENTIFIES THE SIGNAL SOURCE (PRINT AND MODULE). THE FIRST NUMBER AFTER THE K INDICATES THE MODULE PRINT SET, WHILE THE SECOND INDICATES THE SHEET WITHIN THE SET. SIGNALS WITH A "BUS" PREFIX REPRESENT A "WIRED OR" SITUATION, AND MULTIPLE SOURCES FOR THE SIGNAL CAN EXIST.
4. UNLESS OTHERWISE NOTED: RESISTANCE IS IN OHMS; CAPACITANCE IS IN PICOFARRADS.

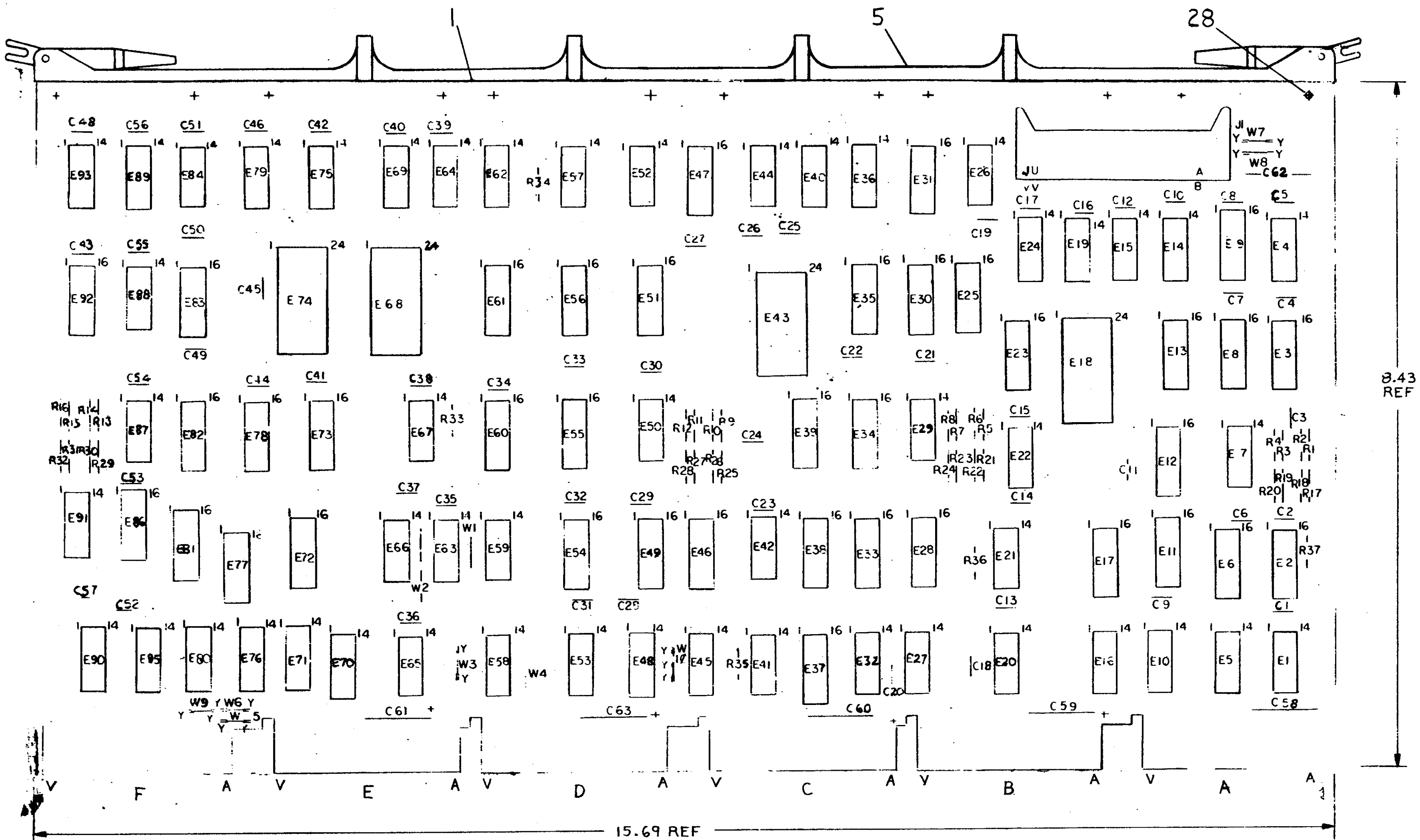

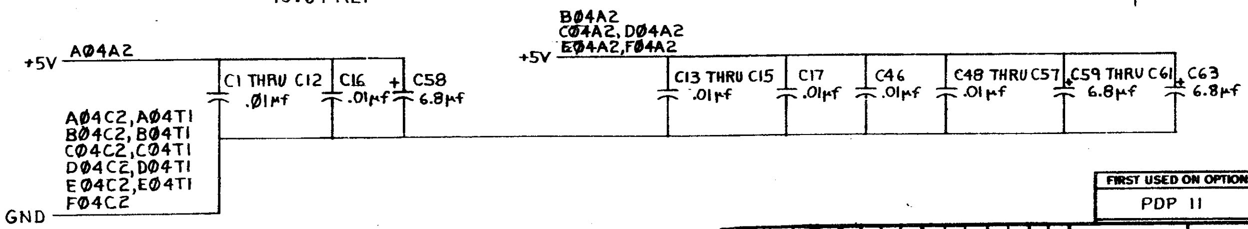

DEC 74157	8	16
DEC 3101A	8	16
DEC 74174	8	16
DEC 74182	8	16
DEC 74181	12	24
DEC 74153	8	16
DEC 8640	1	8
IC TYPE	GND	+ 5V

GND AND 5V ARE USUALLY PIN 7 AND 14 RESPECTIVELY EXCEPTIONS ARE STATED ABOVE

IC PIN LOCATIONS

QTY	REF DESIGNATION	DESCRIPTION	PART NO.	ITEM NO.
AR		INSULATED JUMPER	9009185	30
15		SPLIT LUG	9006735	29
12		EYELET	9006732	28
4	E6, E28, E49, E81	IC DEC 74157	1910655	27
4	E3, E25, E47, E92	IC DEC 3101A	1910653	26
12	E2, E8, E9, E30, E31, E33, E46 E54, E56, E73, E77, E86	IC DEC 74174	1910652	25
1	E39	IC DEC 74182	1910019	24
4	E18, E43, E68, E74	IC DEC 74181	1909982	23
17	E11, E12, E13, E17, E23, E34 E35, E37, E38, E51, E55, E60 E61, E72, E78, E82, E83	IC DEC 74153	1909937	22
4	E7, E29, E50, E87	IC DEC 74H04	1909931	21
9	E16, E24, E53, E58, E59 E63, E67, E70, E75	IC DEC 8815	1909713	20
3	E41, E69, E79	IC DEC 8242	1909712	19
13	E1, E10, E15, E19, E32, E40, E44 E45, E57, E64, E88, E89, E91	IC DEC 8881	1909705	18
1	E21	IC DEC 74H74	1909667	17
8	E4, E14, E26, E36, E52 E62, E84, E93	IC DEC 8640	1911469	16
1	E5	IC DEC 74H11	1909267	15
1	E71	IC DEC 74H60	1909064	14
4	E80, E85, E90, E76	IC DEC 74H53	1909062	13
1	E20	IC DEC 74H30	1909059	12
2	E27, E66	IC DEC 74H10	1909057	11
2	E22, E65	IC DEC 74H00	1909056	10
2	E42, E48	IC DEC 74H20	1905635	9
16	R17 THRU R32	RES 620 1/4W ±5%	1303178	8
16	R1 THRU R16	RES 300 1/4W ±5%	1301425	7
5	R33, R34, R35, R36, R37	RES 1K 1/4W ±5%	1300365	6
1		HANDLE MODULE	1210711-02	5
1	J1	CONN 40 PIN	1209941	4
6	C58 THRU C63	CAP 6.8μf 35V ±10% TANT	1005306	3
56	C1 THRU C46, C48 THRU C57	CAP .01μf 100V ±20% DISC	1001610	2
1		ETCHED CIRCUIT BOARD	5009980	1

PARTS LIST

FIRST USED ON OPTION MODEL: PDP 11

ETCH BOARD REV: D

REV	CHANGE NO.	DATE
A	ORIGINATED M7231-00001	9-26-72
B	M7231-00002	2/19/73
C		8-22-73
D	00003	10-11-74

SEMICONDUCTOR CONVERSION CHART: DEC NO. | EIA NO. | DEC NO. | EIA NO.

DRN: 7-6-72 · CHK'D: 7/31/72 · ENG: 7/31/72 · PROJ. ENG: 7/31/72 · 8-7-72

NEXT HIGHER ASSY: KD11-A

digital EQUIPMENT CORPORATION, MAYNARD, MASSACHUSETTS

TITLE: DATA PATHS

K1-1

SIZE D · CODE CS · NUMBER M7231-0-1 · REV. D

SCALE — · SHEET 1 OF 9

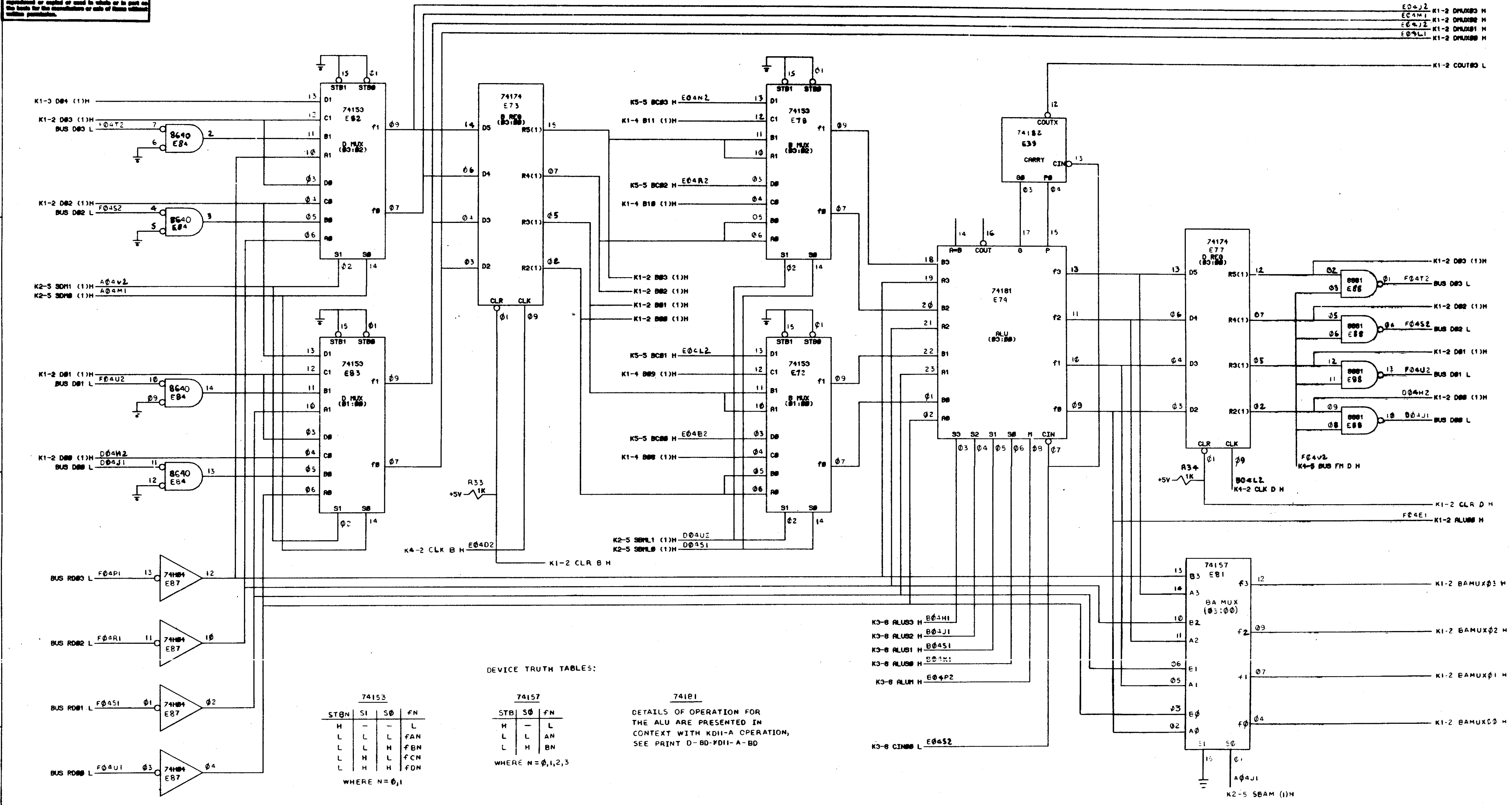

DEVICE TRUTH TABLES:

74153

STBN	S1	S0	fN
H	—	—	L
L	L	L	fAN
L	L	H	fBN
L	H	L	fCN
L	H	H	fDN

WHERE N = 0,1

74157

STB	S0	fN
H	—	L
L	L	AN
L	H	BN

WHERE N = 0,1,2,3

74181

DETAILS OF OPERATION FOR THE ALU ARE PRESENTED IN CONTEXT WITH KD11-A OPERATION, SEE PRINT D-BD-KD11-A-BD

EQUIPMENT CORPORATION

MAYNARD, MASSACHUSETTS

UNLESS OTHERWISE SPECIFIED

DIMENSIONS IN INCHES

TOLERANCES

TITLE: DATA PATHS

DATA PATHS (03:00) K1-2

FIRST USED ON PDP11

SIZE D CODE CS NUMBER M7231-0-1 REV. D

SHEET 2 OF 9

This drawing and specifications, herein, are the property of Digital Equipment Corporation and shall not be reproduced or copied or used in whole or in part as the basis for the manufacture or sale of items without written permission.

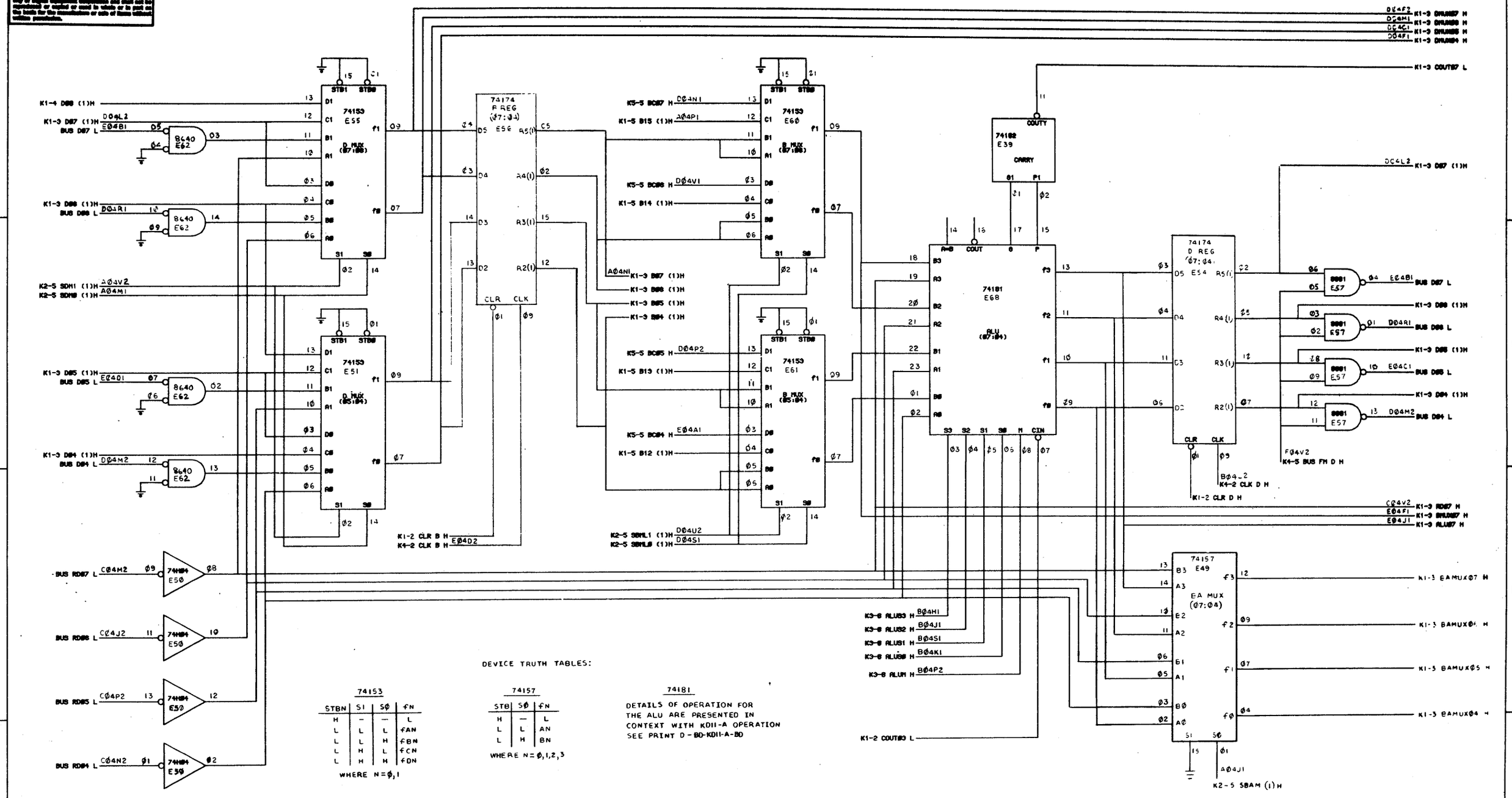

DEVICE TRUTH TABLES:

74153

STBN	S1	SØ	FN
H	—	—	L
L	L	L	FAN
L	L	H	FBN
L	H	L	FCN
L	H	H	FDN

WHERE N=Ø,1

74157

STB	SØ	FN
H	—	L
L	L	AN
L	H	BN

WHERE N=Ø,1,2,3

74181

DETAILS OF OPERATION FOR THE ALU ARE PRESENTED IN CONTEXT WITH KDII-A OPERATION SEE PRINT D-BD-KDII-A-BD

UNLESS OTHERWISE SPECIFIED
DIMENSION IN INCHES
TOLERANCES
DECIMALS ± .005 FRACTIONS ± 1/64 ANGLES ± 0°30'
FINAL SURFACE QUALITY
REMOVE BURRS AND BREAK SHARP CORNERS

MATERIAL

FINISH

DRN. DATE 7-31-72
CHKD. DATE 7/31/72
ENGR. DATE 7/31/72
PROJ. ENGR. DATE 7/31/72
PROD. DATE 8-1-72

FIRST USED ON
PDP11

SCALE
SHEET 3 OF 9

DIGITAL EQUIPMENT CORPORATION
MAYNARD, MASSACHUSETTS

TITLE
DATA PATHS
DATA PATHS (Ø7:Ø4) K1-3

CODE D CS NUMBER M7231-0-1 REV. D

DIST.

This drawing and specifications, herein, are the property of Digital Equipment Corporation and shall not be reproduced or copied or used in whole or in part as the basis for the manufacture or sale of items without written permission.

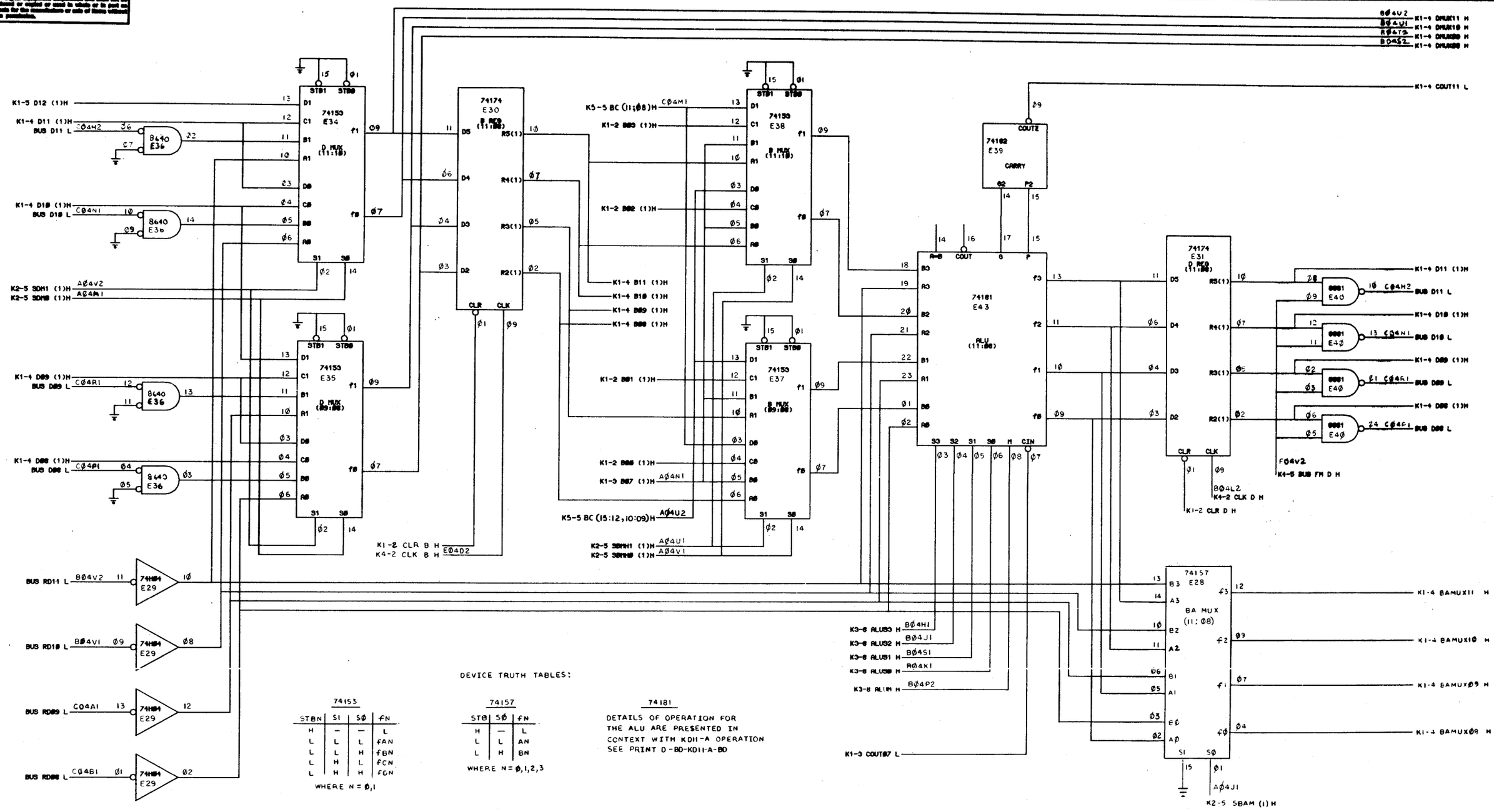

DEVICE TRUTH TABLES:

74153

STBN	S1	S0	fN
H	—	—	L
L	L	L	fAN
L	L	H	fBN
L	H	L	fCN
L	H	H	fDN

WHERE N = 0,1

74157

STB	S0	fN
H	—	L
L	L	AN
L	H	BN

WHERE N = 0,1,2,3

74181

DETAILS OF OPERATION FOR THE ALU ARE PRESENTED IN CONTEXT WITH KD11-A OPERATION SEE PRINT D-BD-KD11-A-BD

UNLESS OTHERWISE SPECIFIED
DIMENSIONS IN INCHES
TOLERANCES
DECIMALS ± .005 FRACTIONS ± 1/64 ANGLES ± 0°30'
FINAL SURFACE QUALITY
REMOVE BURRS AND BREAK SHARP CORNERS

MATERIAL

FINISH

DRN. DATE 1-27-72
CHKD. DATE 7/31/72
ENGR. DATE 7/31/72
PROJ. DATE 7/31/72
MFG. DATE 8-1-72

FIRST USED ON
PDP11

SCALE
SHEET 4 OF 9

EQUIPMENT CORPORATION
MAYNARD, MASSACHUSETTS

TITLE
DATA PATHS
DATA PATHS (11:08) K1-4

SIZE D CODE CB NUMBER M7201-0-1 REV. D
DIST.

This drawing and specifications, herein, are the property of Digital Equipment Corporation and shall not be reproduced or copied or used in whole or in part as the basis for the manufacture or sale of items without written permission.

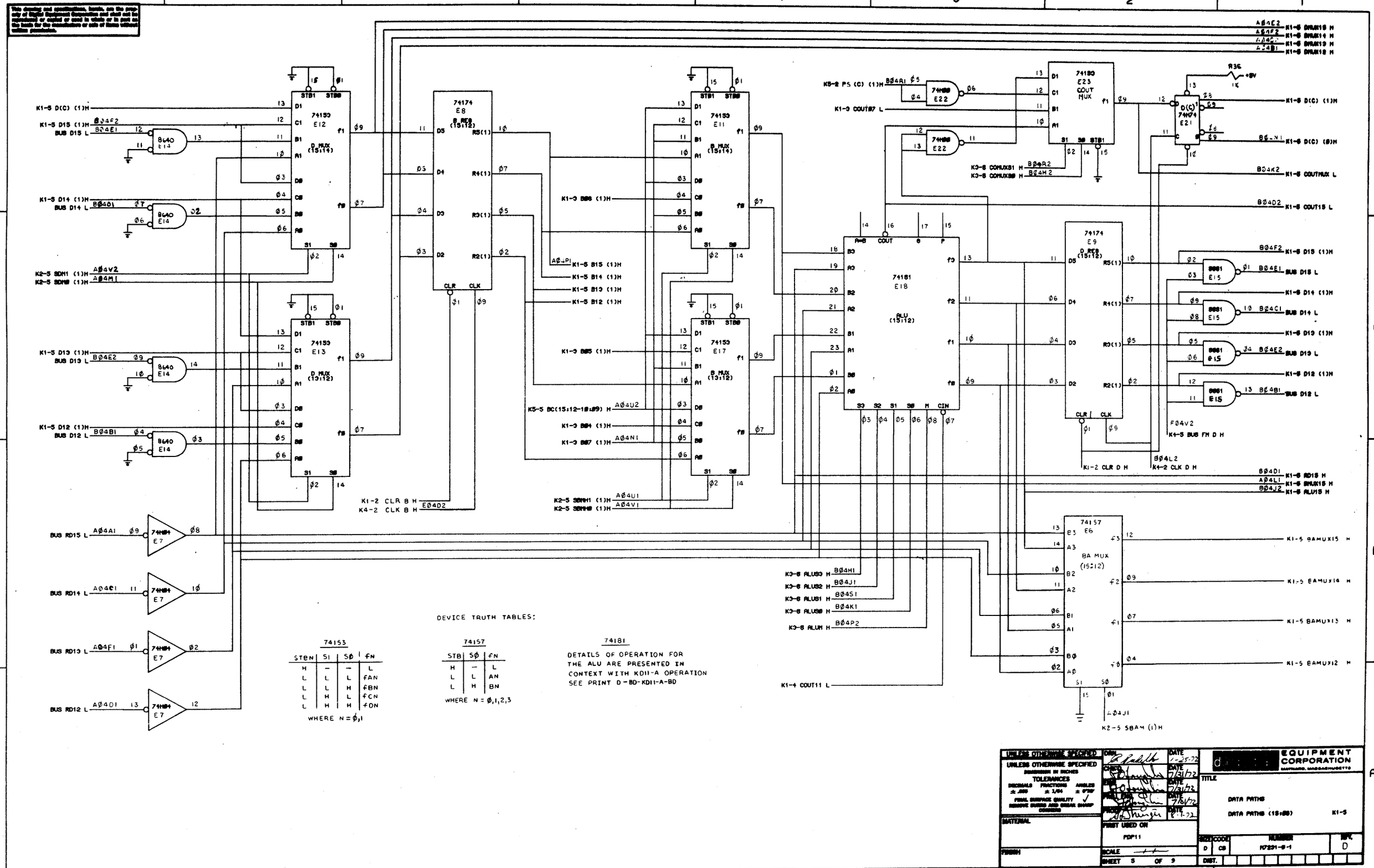

DEVICE TRUTH TABLES:

74153

STEN	S1	S0	FN
H	–	–	L
L	L	L	FAN
L	L	H	FBN
L	H	L	FCN
L	H	H	FDN

WHERE N = 0,1

74157

STB	S0	FN
H	–	L
L	L	AN
L	H	BN

WHERE N = 0,1,2,3

74181

DETAILS OF OPERATION FOR THE ALU ARE PRESENTED IN CONTEXT WITH KD11-A OPERATION SEE PRINT D-BD-KD11-A-BD

UNLESS OTHERWISE SPECIFIED DIMENSION IN INCHES TOLERANCES DECIMALS ± .005 FRACTIONS ± 1/64 ANGLES ± 0°30' FINAL SURFACE QUALITY REMOVE BURRS AND BREAK SHARP CORNERS	DRN.	DATE 1-25-72	DIGITAL EQUIPMENT CORPORATION MAYNARD, MASSACHUSETTS
	CHECK	DATE 7/31/72	TITLE DATA PATHS DATA PATHS (15:00) K1-5
		DATE 7/31/72	
		DATE 7/31/72	
MATERIAL		DATE 8-1-72	
FINISH	FIRST USED ON PDP11		SIZE D CODE CS NUMBER 10231-0-1 REV. D
	SCALE		
	SHEET 5 OF 9		DIST.

This drawing and specifications, herein, are the property of Digital Equipment Corporation and shall not be reproduced or copied or used in whole or in part as the basis for the manufacture or sale of items without written permission.

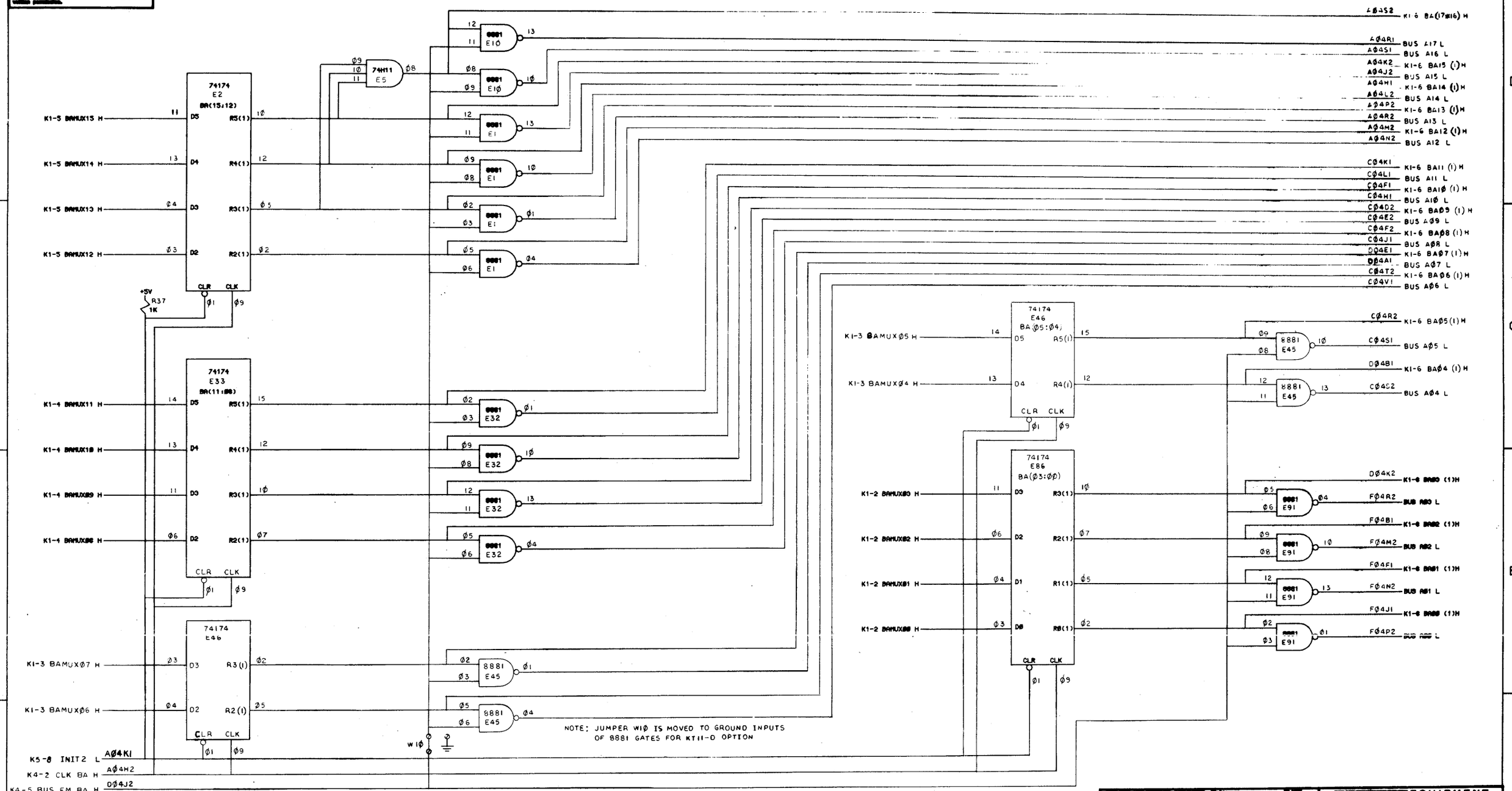

UNLESS OTHERWISE SPECIFIED
DIMENSIONS IN INCHES
TOLERANCES
DECIMALS ± .005 FRACTIONS ± 1/64 ANGLES ± 0°30'
FINAL SURFACE QUALITY
REMOVE BURRS AND SHARP CORNERS

MATERIAL

FINISH

DRAWN R. Sandler DATE 2-10-72
CHECK DATE 7/31/72
DATE 7/31/72
DATE 7/31/72
DATE 8-1-72

FIRST USED ON
PDP11

SCALE
SHEET 6 OF 9

EQUIPMENT CORPORATION
MAYNARD, MASSACHUSETTS

TITLE
DATA PATHS
BA (15:00) K1-6

SIZE D CODE CS NUMBER M7231-0-1 REV. D

DIST.

This drawing and specifications, herein, are the property of Digital Equipment Corporation and shall not be reproduced or copied or used in whole or in part as the basis for the manufacture or sale of items without written permission.

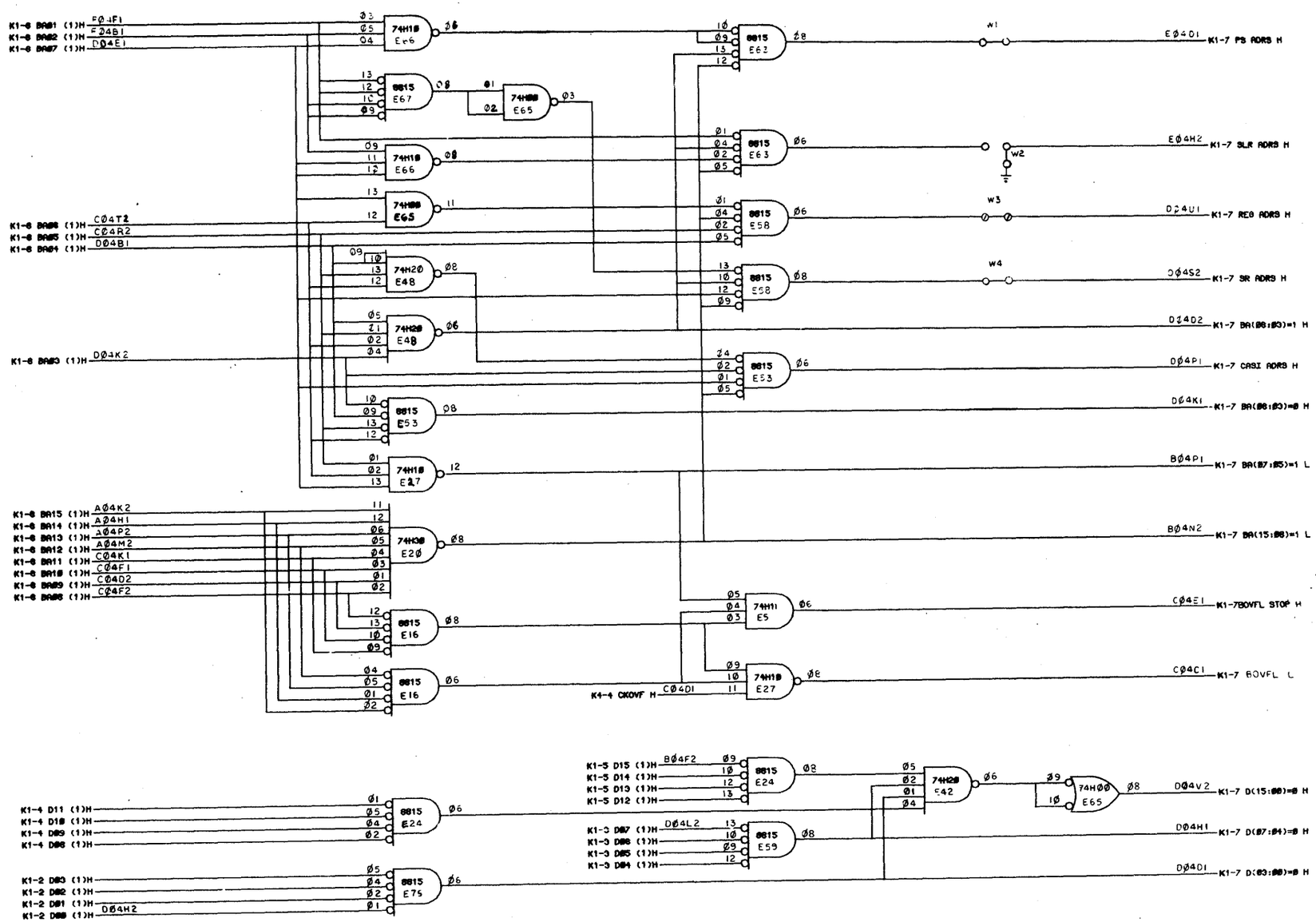

PROCESSOR ADDRESSES

NAME & MNEMONICS			(ADRS)8
PROCESSOR STATUS		PS	777776
STACK LIMIT REGISTER		SLR	777774
GENERAL REGISTERS			
REGISTERS USED TO IMPLEMENT MICROFLOW	R [ADRS]	REG 17	777717
	R [P USER]	REG 16	777716
	R [TEMPC]	REG 15	777715
	R [VECT]	REG 14	777714
	R [IR]	REG 13	777713
	R [DEST]	REG 12	777712
	R [SOURCE]	REG 11	777711
	R [TEMP]	REG 10	777710
REGISTERS USE IN INSTRUCTIONS FOR PDP11	R [PC],R7	REG 07	777707
	R [SP],R6	REG 06	777706
	R5	REG 05	777705
	R4	REG 04	777704
	R3	REG 03	777703
	R2	REG 02	777702
	R1	REG 01	777701
	R0	REG 00	777700
CONSOLE SWITCH REGISTER		SR	777570

NOTES:

1. JUMPERS W1, W3 AND W4 ARE REMOVED FOR KT11-D OPTION.
2. JUMPER W2 IS MOVED TO CONNECT E63 PIN 06 TO E04H2 FOR KJ11-A OPTION ALONE. JUMPER IS COMPLETELY REMOVED FOR KT11-D OPTION.

UNLESS OTHERWISE SPECIFIED
DIMENSION IN INCHES
TOLERANCES
DECIMALS ± .005 FRACTIONS ± 1/64 ANGLES ± 0°30'
FINAL SURFACE QUALITY
REMOVE BURRS AND BREAK SHARP CORNERS

MATERIAL

FINISH

DRN DATE
CHKD DATE 7/31/72
ENG DATE 7/31/72
PROJ ENG DATE 7/31/72
PROD DATE 8-1-72

FIRST USED ON
PDP11

SCALE
SHEET 7 OF 9

digital EQUIPMENT CORPORATION
MAYNARD, MASSACHUSETTS

TITLE
DATA PATH
ADRS DECODE K1-7

SIZE	CODE	NUMBER	REV
D	C5	M7231-0-1	D

DIST.

This drawing and specifications, herein, are the property of Digital Equipment Corporation and shall not be reproduced or copied or used in whole or in part for the basis for the manufacture or sale of items without written permission.

NOTE: JUMPERS W5, W6 AND W9 ARE REMOVED FOR KT11-D OPTION

NOTE: REGISTER (REG) ADDRESSES ARE NOTED ON PREVIOUS PAGE (K1-7)

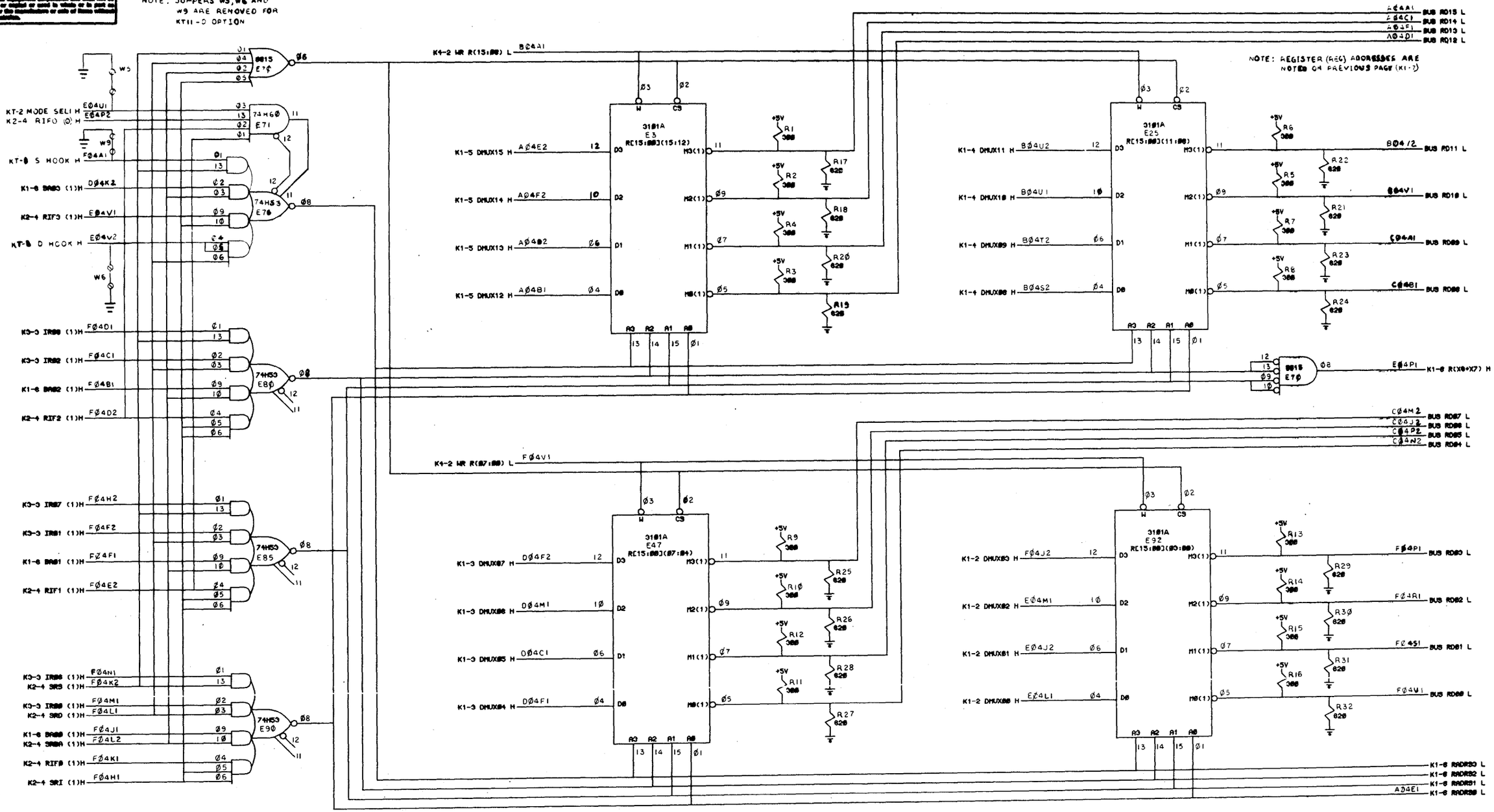

UNLESS OTHERWISE SPECIFIED DIMENSION IN INCHES TOLERANCES DECIMALS ± .005 FRACTIONS ± 1/64 ANGLES ± 0°30' FINAL SURFACE QUALITY REMOVE BURRS AND BREAK SHARP CORNERS	DRN	DATE 1-21-72	digital EQUIPMENT CORPORATION MAYNARD, MASSACHUSETTS
MATERIAL	CHK'D	DATE 7/31/72	TITLE DATA PATHS RE0(15:00)(15:00) K1-8
FINISH		DATE 7/31/72	
		DATE 7/31/72	
		DATE 8-1-72	
	FIRST USED ON PDP11		
	SCALE		SIZE D / CODE CS / NUMBER M7231-0-1 / REV. D
	SHEET 6 OF 9		DIST.

This drawing and specifications, herein, are the property of Digital Equipment Corporation and shall not be reproduced or copied or used in whole or in part as the basis for the manufacture or sale of items without written permission.

NOTE: JUMPERS W7 AND W8 ARE REMOVED FOR KT11-D OPTION

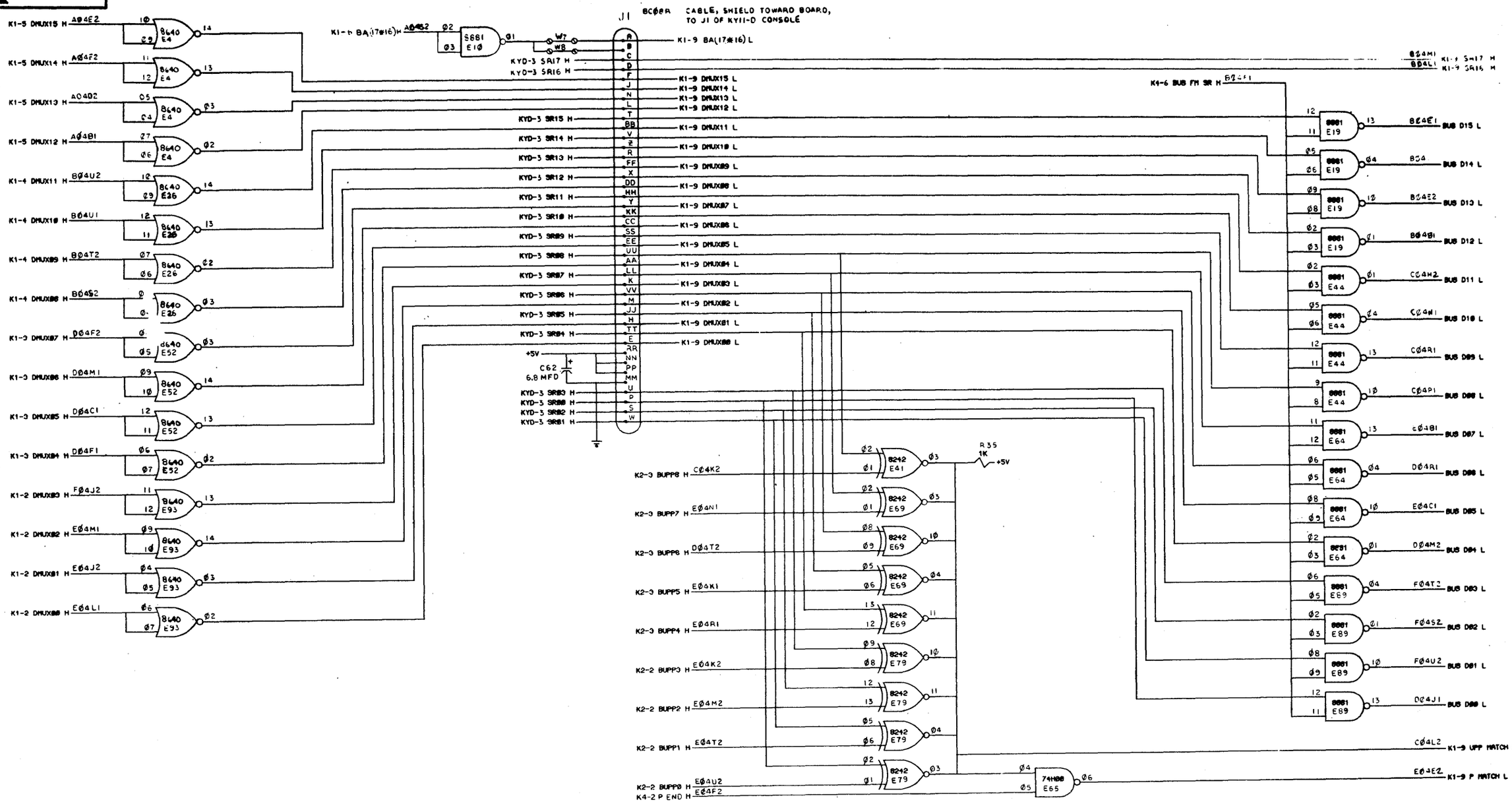

UNLESS OTHERWISE SPECIFIED DIMENSIONS IN INCHES TOLERANCES DECIMALS ± .005 FRACTIONS ± 1/64 ANGLES ± 0°30' FINAL SURFACE QUALITY ✓ REMOVE BURRS AND BREAK SHARP CORNERS	DWN.	DATE 2-9-72	DIGITAL EQUIPMENT CORPORATION MAYNARD, MASSACHUSETTS
	CHK'D	DATE 7/31/72	TITLE DATA PATHS CONSOLE & MATCH K1-9
	ENG	DATE 7/31/72	
	PROJ. ENG.	DATE 7/31/72	
	MGR	DATE 8-7-72	
MATERIAL	FIRST USED ON FDP11		
FINISH	SCALE		SIZE D CODE CS NUMBER M7201-0-1 REV. D
	SHEET 9 OF 9		DIST.

NOTES:

1. PIN NOTATION THROUGHOUT IS ORDERED UPON MODULE PLACEMENT IN THE KD11-A PROCESSOR. MODULE REFERENCE ALONE IS OBTAINED BY DELETING THE NUMBER (SLOT LOCATION) AFTER THE FIRST LETTER.
2. ALL SIGNALS THAT HAVE MODULE PINS ARE SO NOTED. OUTPUT SIGNALS WITH MODULE PINS ARE BROUGHT TO THE RIGHT SIDE OF THE PRINT.
3. PROCESSOR SIGNAL PREFIX NOTATION (K2-1 FOR EXAMPLE) IDENTIFIES THE SIGNAL SOURCE (PRINT AND MODULE). THE FIRST NUMBER AFTER THE K INDICATES THE MODULE PRINT SET, WHILE THE SECOND INDICATES THE SHEET WITHIN THE SET. SIGNALS WITH A "BUS" PREFIX REPRESENT A "WIRED OR" SITUATION, AND MULTIPLE SOURCES FOR THE SIGNAL CAN EXIST.
4. UNLESS OTHERWISE NOTED: RESISTANCE IS IN OHMS; CAPACITANCE IS IN PICOFARRADS.

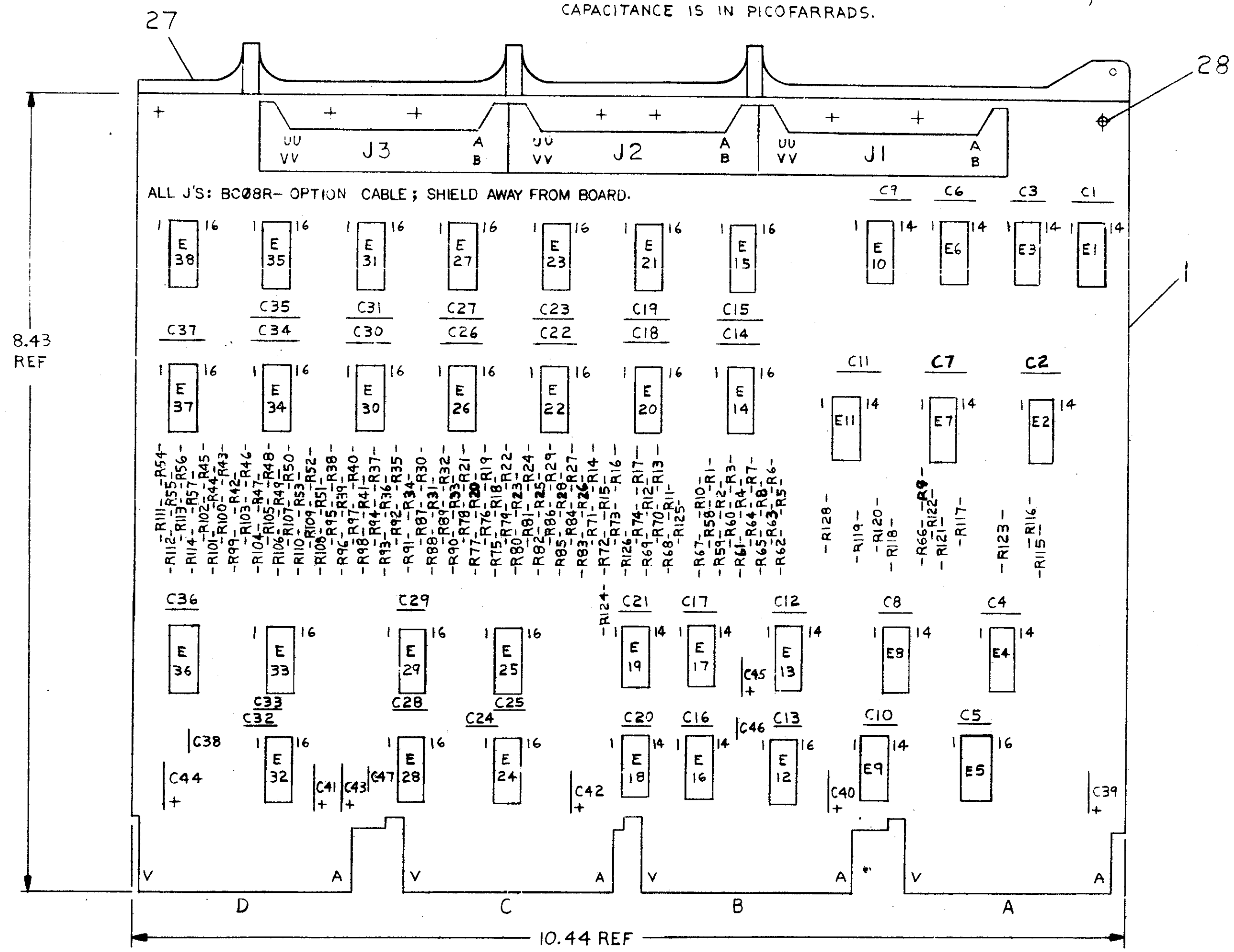

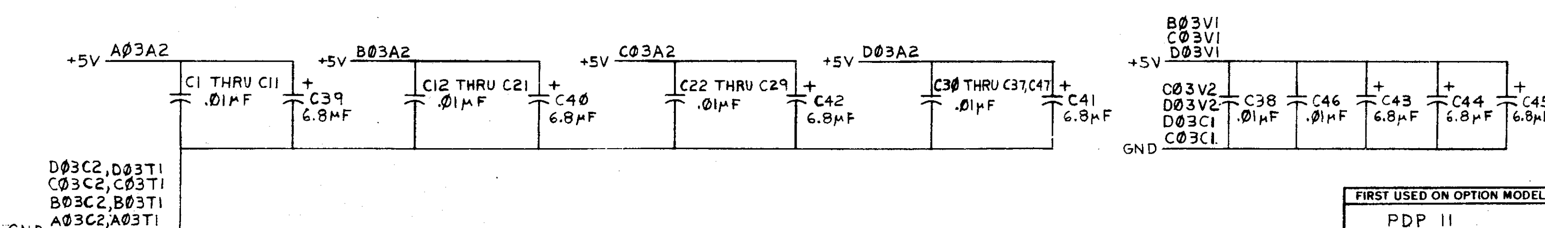

QTY	REF DESIGNATION	DESCRIPTION	PART NO.	ITEM NO.
8		EYELET	9006732	28
1		HANDLE	7409871	27
1	E38	I.C. DEC 23B40A2	23B40A2	26
1	E34	I.C. DEC 23B12A2	23B12A2	25
1	E35	I.C. DEC 23B11A2	23B11A2	24
1	E37	I.C. DEC 23B10A2	23B10A2	23
1	E31	I.C. DEC 23B35A2	23B35A2	22
1	E30	I.C. DEC 23B08A2	23B08A2	21
1	E27	I.C. DEC 23B07A2	23B07A2	20
1	E22	I.C. DEC 23B06A2	23B06A2	19
1	E23	I.C. DEC 23B42A2	23E42A2	18
1	E26	I.C. DEC 23B41A2	23B41A2	17
1	E21	I.C. DEC 23B03A2	23B03A2	16
1	E20	I.C. DEC 23B02A2	23B02A2	15
1	E14	I.C. DEC 23B01A2	23B01A2	14
1	E15	I.C. DEC 23B00A2	23B00A2	13
1	E36	I.C. DEC 74175	1910651	12
8	E5, E12, E24, E25, E28 E29, E32, E33	I.C. DEC 74174	1910652	11
3	E4, E8, E13	I.C. DEC 74H04	1909931	10
9	E1, E3, E6, E9, E10, E18 E19, E16, E17	I.C. DEC 74H74	1909667	9
3	E2, E7, E11	I.C. DEC 74H10	1909057	8
13	R115 THRU R126, R128	RES. 1K 1/4W ±5%	1300365	7
57	R1 THRU R57	RES. 680 1/4W ±5%	1301424	6
57	R58 THRU R114	RES. 390 1/4W ±5%	1300309	5
3	J1, J2, J3	CONN. 40 PIN	1209941	4
7	C39 THRU C45	CAP 6.8μF 35V ±10% TANT	1005306	3
40	C1 THRU C38, C46, C47	CAP .01μF 100V ±20% DISC	1001610	2
1		ETCHED CIRCUIT BOARD	5009981	1

PARTS LIST

ETCH BOARD REV E

IC TYPE	GND	+ 5V
23B00A2 THRU 23B13A2	8	16
DEC 74174	8	16
DEC 74175	8	16

GND AND 5V ARE USUALLY PIN 7 AND 14 RESPECTIVELY EXCEPTIONS ARE STATED ABOVE

IC PIN LOCATIONS

REV	CHANGE NO.	ORIGINATE
F	M7232-00004	A. FURTADO 8-3-73, J. BUZYNSKI 8-10-73
E	M7232-00003	J. O'LOUGHLIN 6/14/73
D	M7232-00002	J. O'LOUGHLIN 11/14/72
C	M7232-00001	J. O'LOUGHLIN 9/9/72
B	ORIGINATE	

FIRST USED ON OPTION MODEL: PDP 11

SEMICONDUCTOR CONVERSION CHART (DEC NO. | EIA NO. | DEC NO. | EIA NO.)

DRN. DATE 6-6-72; CHK'D. DATE 6/16/72; ENG. DATE 6/16/72; PROJ. ENG. DATE 6/16/72; PROD. DATE

NEXT HIGHER ASSY: KD11-A

DIGITAL EQUIPMENT CORPORATION, MAYNARD, MASSACHUSETTS

TITLE: U WORD

K2-1

SIZE D, CODE CS, NUMBER M7232-Ø-1, REV. F

SCALE —; SHEET 1 OF 12

This drawing and specifications, herein, are the property of Digital Equipment Corporation and shall not be reproduced or copied or used in whole or in part as the basis for the manufacture or sale of items without written permission.

DEC FORM NO. DRD-135A

This drawing and specifications, herein, are the property of Digital Equipment Corporation and shall not be reproduced or copied or used in whole or in part as the basis for the manufacture or sale of items without written permission.

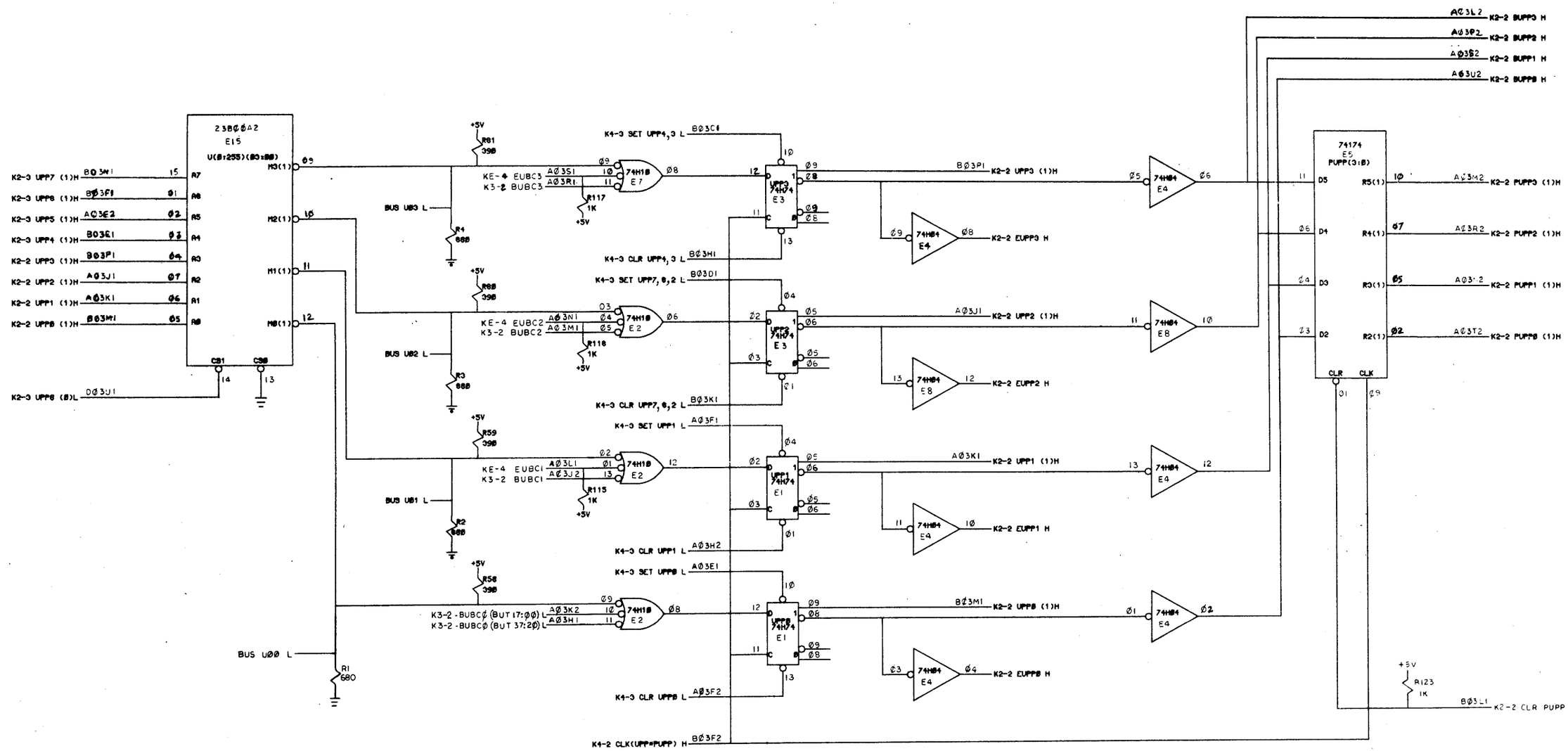

UNLESS OTHERWISE SPECIFIED DIMENSION IN INCHES TOLERANCES DECIMALS ± .005 FRACTIONS ± 1/64 ANGLES ± 0°30' FINAL SURFACE QUALITY ✓ REMOVE BURRS AND BREAK SHARP CORNERS	DRN.	DATE 1-27-72	digital EQUIPMENT CORPORATION MAYNARD, MASSACHUSETTS
	CHK'D	DATE 6/6/72	TITLE U WORD U(80:88) K2-2
	ENG	DATE 6/6/72	
	PROJ. ENG	DATE 6/6/72	
MATERIAL	MGR.	DATE 6/6/72	
	FIRST USED ON PDP11		SIZE D CODE C3 NUMBER M7232-0-1 REV. F
FINISH	SCALE —		DIST.
	SHEET 2 OF 12		

This drawing and specifications, herein, are the property of Digital Equipment Corporation and shall not be reproduced or copied or used in whole or in part as the basis for the manufacture or sale of items without written permission.

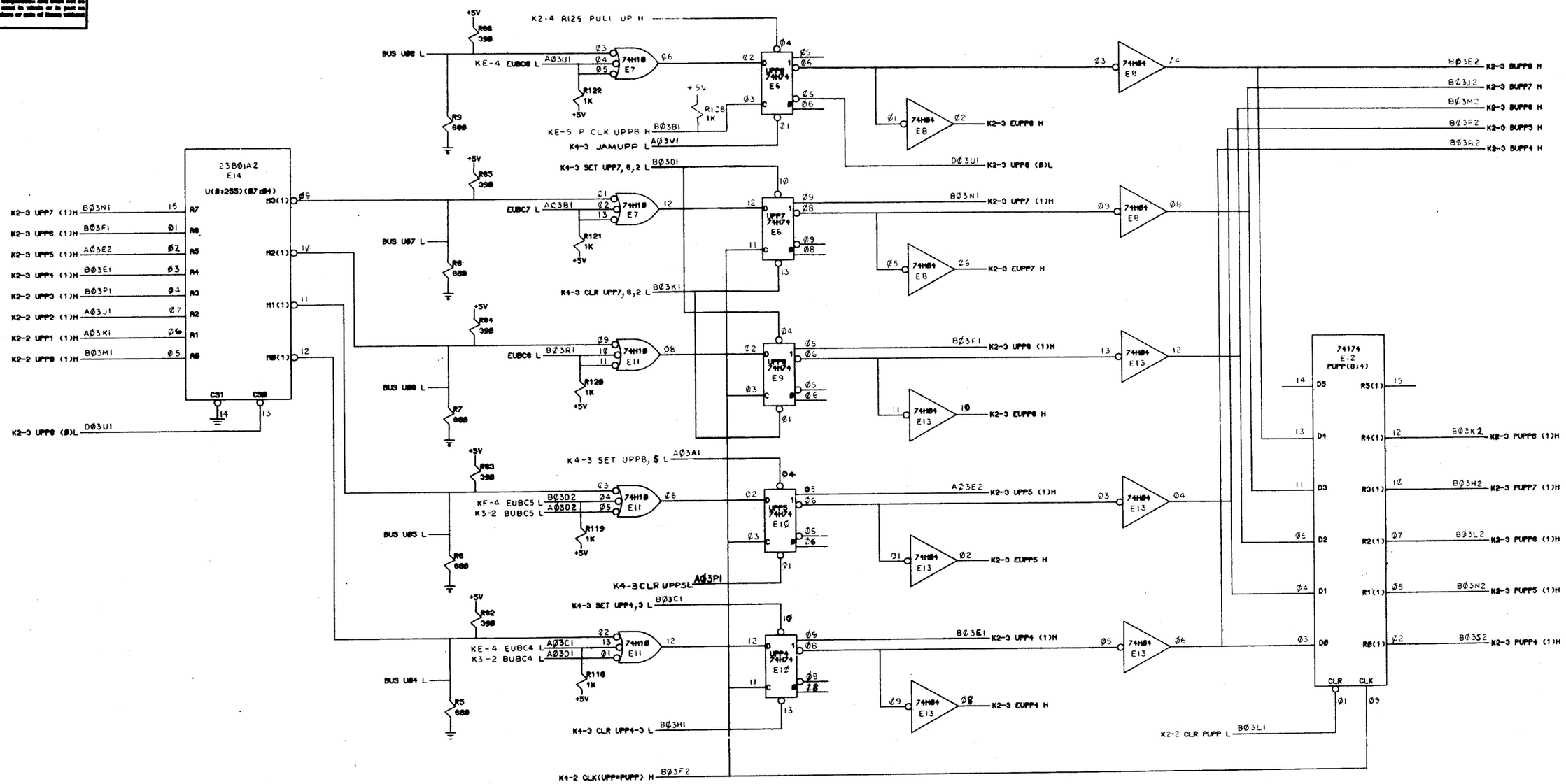

UNLESS OTHERWISE SPECIFIED DIMENSION IN INCHES TOLERANCES DECIMALS ± .005 FRACTIONS ± 1/64 ANGLES ± 0°30' FINAL SURFACE QUALITY ✓ REMOVE BURRS AND BREAK SHARP CORNERS	DRN.	DATE 1-27-72	digital EQUIPMENT CORPORATION MAYNARD, MASSACHUSETTS
	CHK'D.	DATE 2/14/72	TITLE U WORD, U(B7:B4) K2-3
	ENG.	DATE 2/14/72	
	PRIN. ENG.	DATE 2/16/72	
MATERIAL	PROD.	DATE 6/30/72	
FINISH	FIRST USED ON PDP11		SIZE D CODE CS NUMBER M7232-B-1 REV. F
	SCALE		DIST.
	SHEET 3 OF 12		

This drawing and specifications, herein, are the property of Digital Equipment Corporation and shall not be reproduced or copied or used in whole or in part as the basis for the manufacture or sale of items without written permission.

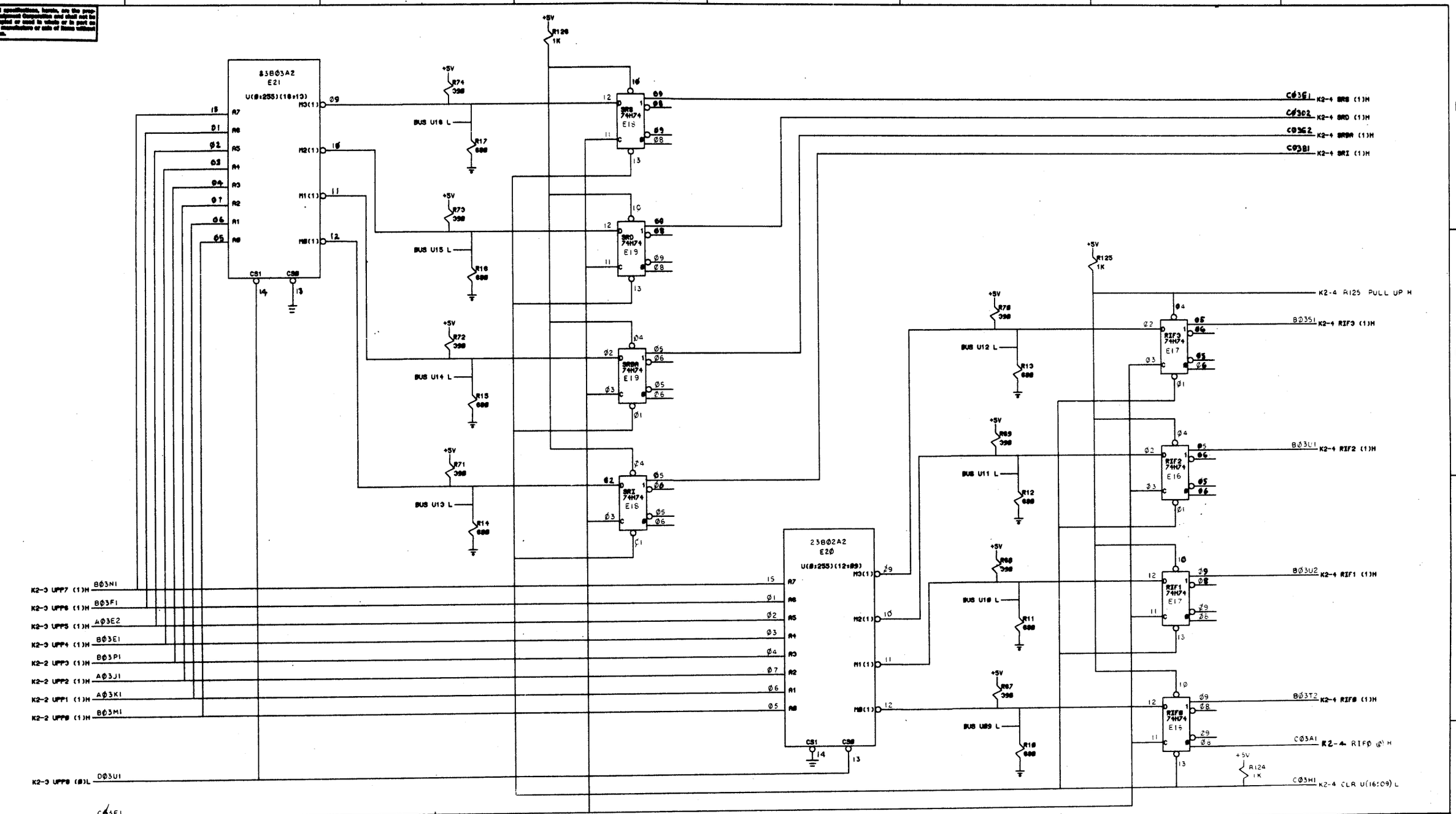

This drawing and specifications, herein, are the property of Digital Equipment Corporation and shall not be reproduced or copied or used in whole or in part as the basis for the manufacture or sale of items without written permission.

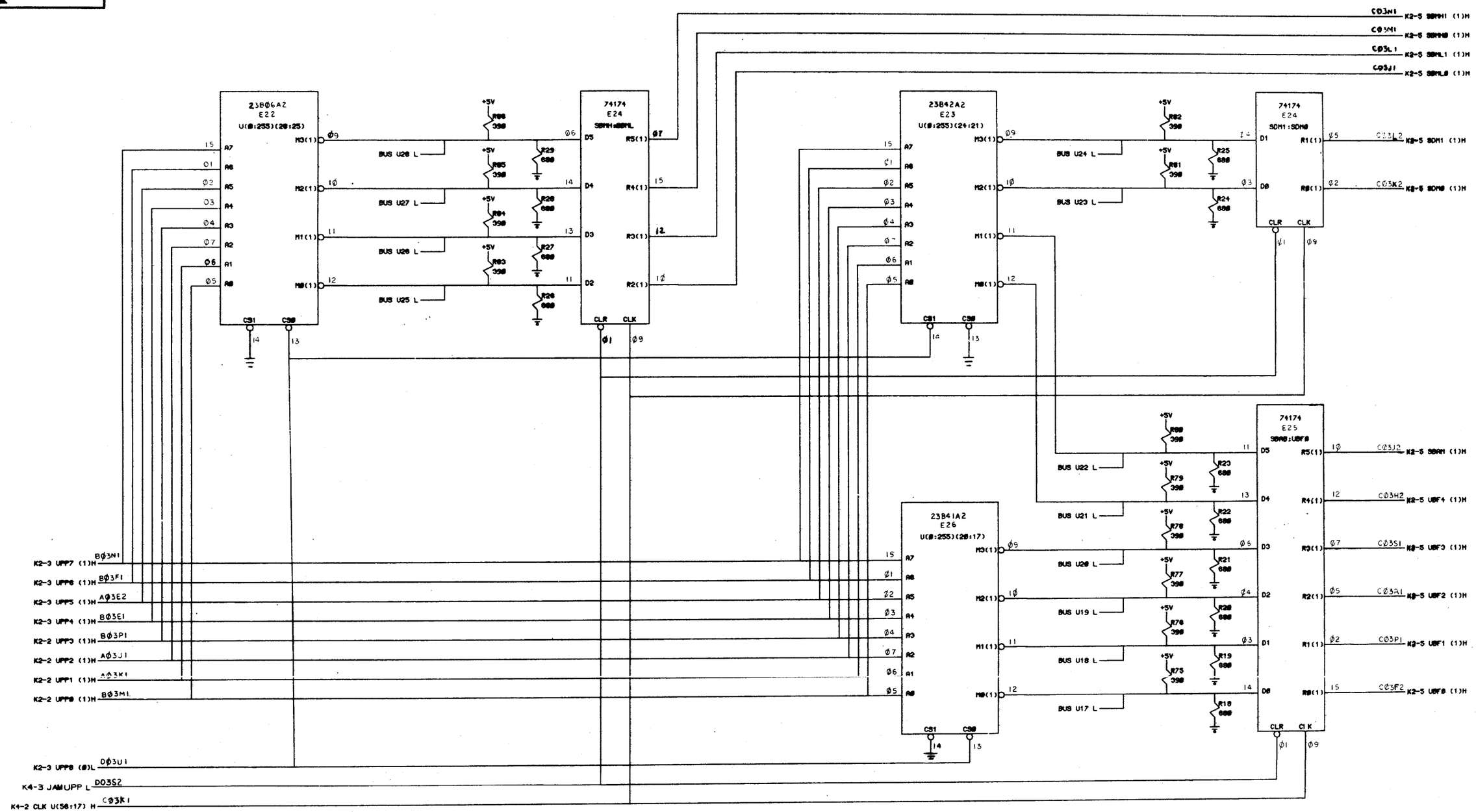

UNLESS OTHERWISE SPECIFIED DIMENSION IN INCHES TOLERANCES DECIMALS ± .005 FRACTIONS ± 1/64 ANGLES ± 0°30' FINAL SURFACE QUALITY REMOVE BURRS AND BREAK SHARP CORNERS	DRN.	DATE 1-28-72	digital EQUIPMENT CORPORATION MAYNARD, MASSACHUSETTS
	CHKD.	DATE 6/16/72	TITLE U WORD U(20:17) K2-5
	ENG.	DATE 6/16/72	
	ENG.	DATE 6/16/72	
MATERIAL	APPD.	DATE 6/16/72	
FINISH	FIRST USED ON PDP11	SCALE —	SIZE D CODE CS NUMBER M7232-0-1 REV. F
		SHEET 5 OF 12	DIST.

1 8-13-71

This drawing and specifications, herein, are the property of Digital Equipment Corporation and shall not be reproduced or copied or used in whole or in part as the basis for the manufacture or sale of items without written permission.

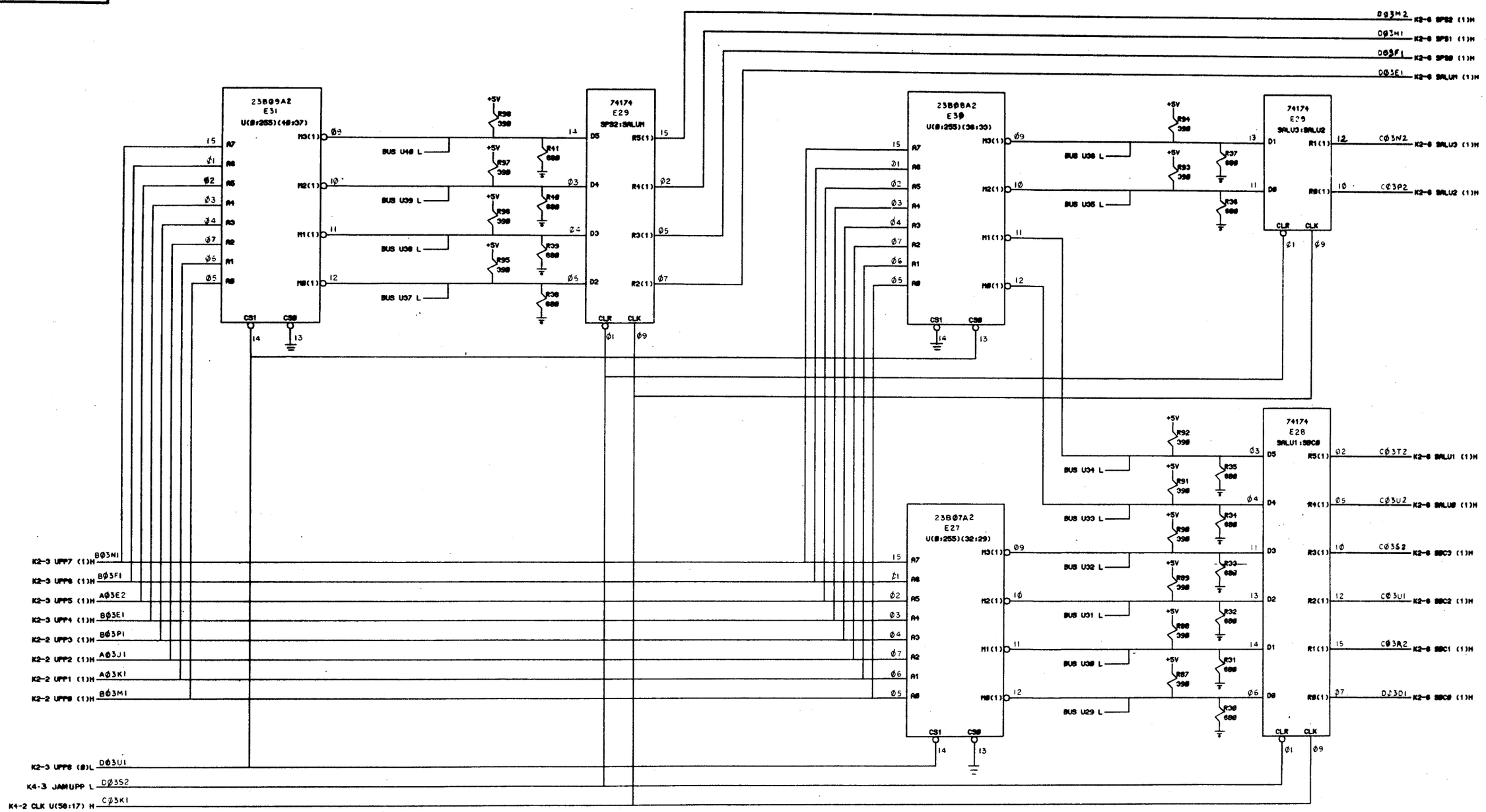

UNLESS OTHERWISE SPECIFIED
DIMENSION IN INCHES
TOLERANCES
DECIMALS ± .005 FRACTIONS ± 1/64 ANGLES ± 0°30'
FINAL SURFACE QUALITY ✓
REMOVE BURRS AND BREAK SHARP CORNERS

MATERIAL

FINISH

DRN. T. Rudzis DATE 2-24-72
CHKD. DATE 6/16/72
ENG. DATE 6/16/72
PROJ. ENGR. DATE 6/16/72
PROD. R. Dooley DATE 6/30/72

FIRST USED ON
PDP11

SCALE
SHEET 6 OF 12

DIGITAL EQUIPMENT CORPORATION
MAYNARD, MASSACHUSETTS

TITLE
U WORD
U(40:29) K2-6

SIZE D CODE CS NUMBER M7232-0-1 REV. F
DIST.

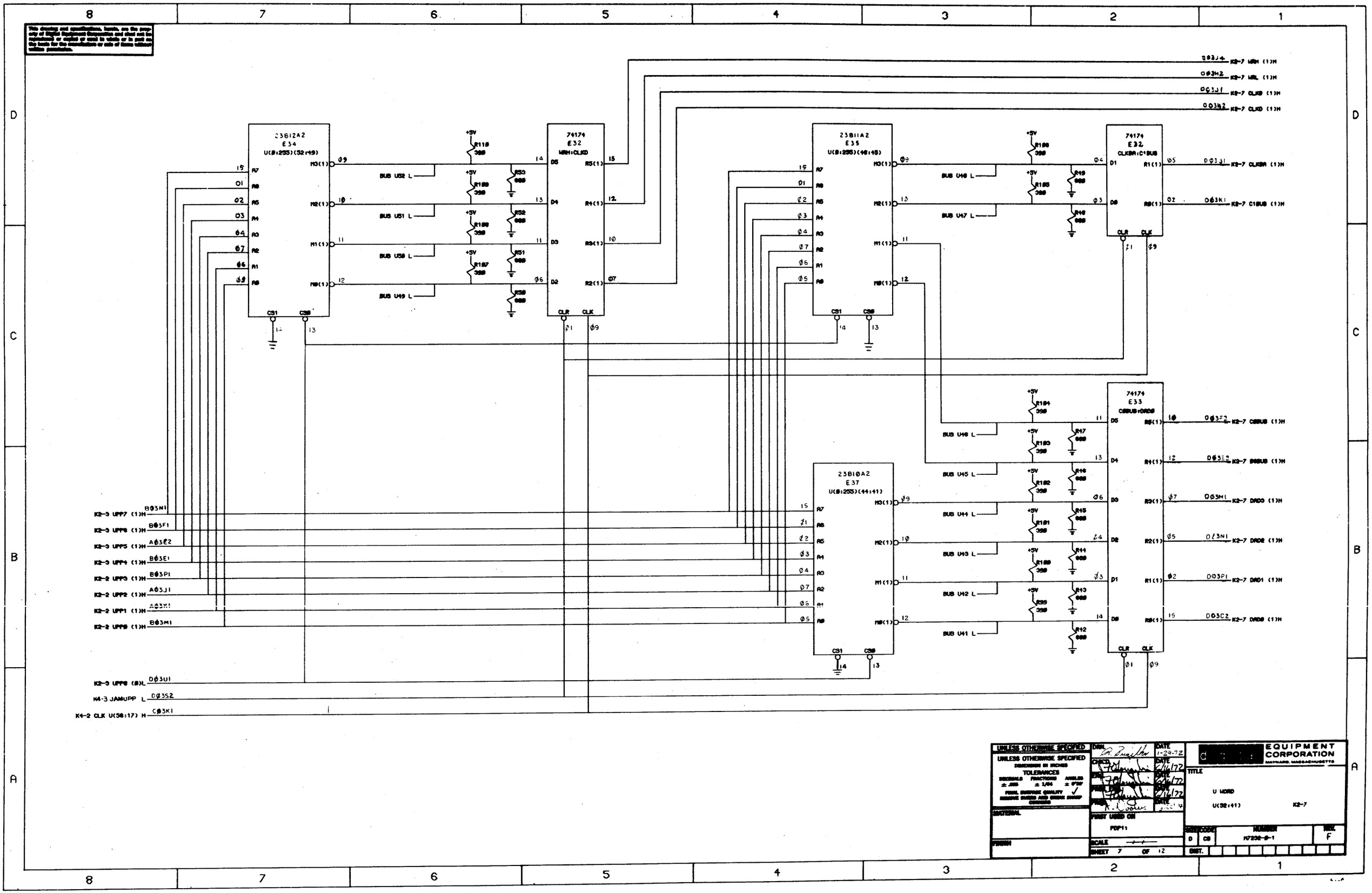
23612A2
E34
U(8:255)(32:49)
74174
E32
MRH:CLKD
23811A2
E35
U(8:255)(40:45)
74174
E32
CLKBA:C1BUS
74174
E33
CBUS:DADB
23810A2
E37
U(8:255)(44:41)
BUS U52 L
BUS U51 L
BUS U50 L
BUS U49 L
BUS U48 L
BUS U47 L
BUS U46 L
BUS U45 L
BUS U44 L
BUS U43 L
BUS U42 L
BUS U41 L
K2-7 MRH (1)H
K2-7 MRL (1)H
K2-7 CLKB (1)H
K2-7 CLKD (1)H
K2-7 CLKBA (1)H
K2-7 C1BUS (1)H
K2-7 CBBUS (1)H
K2-7 BABUS (1)H
K2-7 DAD3 (1)H
K2-7 DAD2 (1)H
K2-7 DAD1 (1)H
K2-7 DAD0 (1)H
K2-3 UPP7 (1)H
K2-3 UPP6 (1)H
K2-3 UPP5 (1)H
K2-3 UPP4 (1)H
K2-2 UPP3 (1)H
K2-2 UPP2 (1)H
K2-2 UPP1 (1)H
K2-2 UPP0 (1)H
K2-3 UPP0 (8)L
K4-3 JAMUPP L
K4-2 CLK U(58:17) H
UNLESS OTHERWISE SPECIFIED
TOLERANCES
FINAL SURFACE QUALITY
MATERIAL
FINISH
DRN.
CHKD.
ENG.
PROJ. ENG.
MFG.
DATE
1-29-72
FIRST USED ON
PDP11
SCALE
SHEET 7 OF 12
EQUIPMENT CORPORATION
MAYNARD, MASSACHUSETTS
TITLE
U WORD
U(32:41)
K2-7
SIZE D
CODE CB
NUMBER M7236-0-1
REV. F
DIST.

This drawing and specifications, herein, are the property of Digital Equipment Corporation and shall not be reproduced or copied or used in whole or in part as the basis for the manufacture or sale of items without written permission.

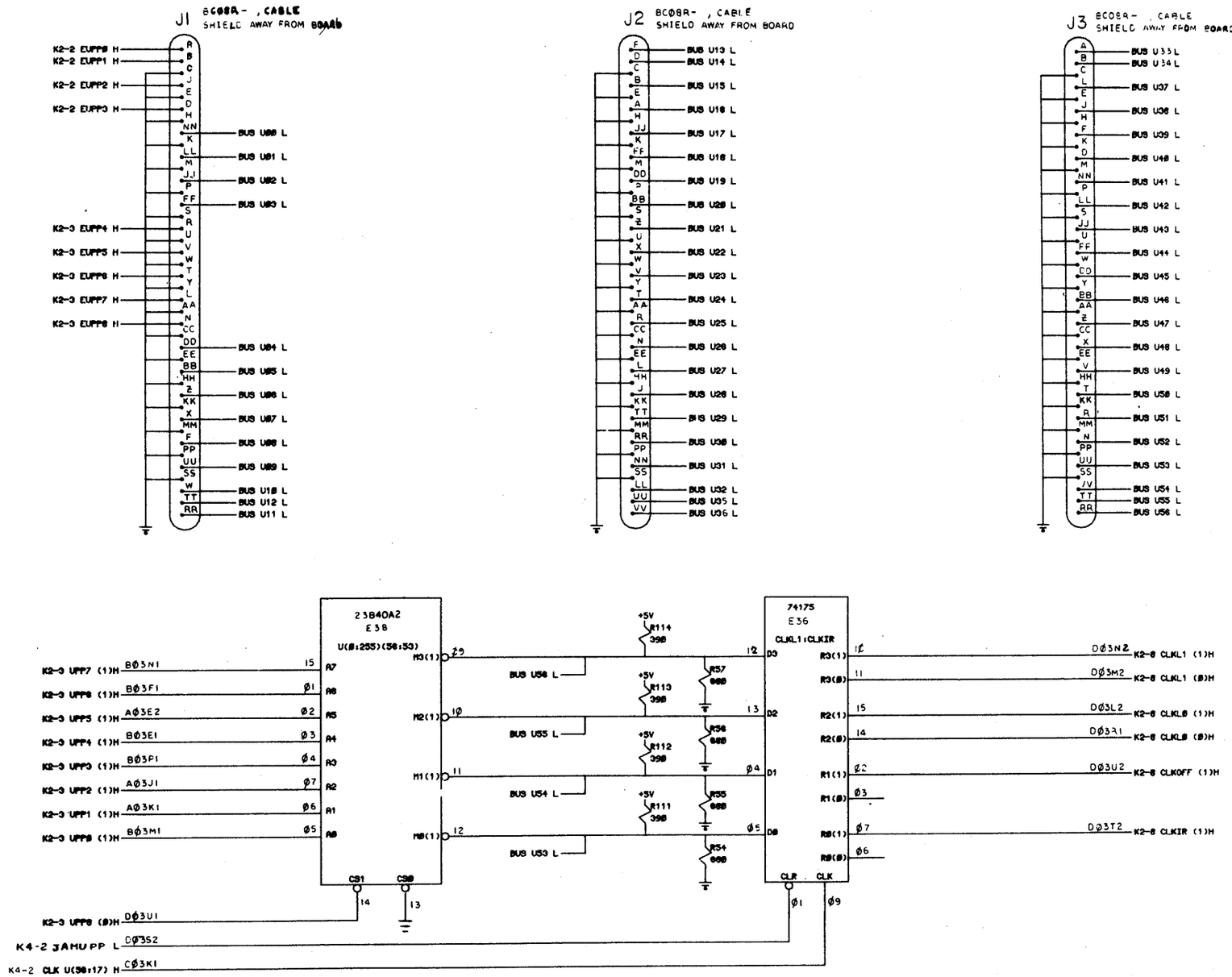

UNLESS OTHERWISE SPECIFIED
DIMENSIONS IN INCHES
TOLERANCES
DECIMALS ± .005 FRACTIONS ± 1/64 ANGLES ± 0°30'
FINAL SURFACE QUALITY ✓
REMOVE BURRS AND BREAK SHARP CORNERS

MATERIAL

FINISH

DRN	R. Rudolph	DATE 2-10-72
CHKD	[illegible]	DATE 7/16/72
ENGR	[illegible]	DATE 7/16/72
PROJ ENGR	[illegible]	DATE 7/16/72
PROD	R. Dooley	DATE 6/20/72

FIRST USED ON
PDP11

SCALE —/—

SHEET 8 OF 12

DIGITAL EQUIPMENT CORPORATION
MAYNARD, MASSACHUSETTS

TITLE
U MOD
U(56:53) & CONNECTORS K2-8

SIZE	CODE	NUMBER	REV.
D	CS	M7232-8-1	F

DIST.

FLOWS	STATE	ADR	CLK	CIR	WR	CB	CD	CBA	BUS	DAD	SPS	ALU	SBC	SBM	SDM	SBA	UBF	SRx	RIF	UPF
01	FET01	000	3	0	0	0	0	1	1	00	0	00	00	00	0	1	00	01	07	001
01	FET03	001	2	1	3	1	0	0	0	00	0	00	00	00	1	0	00	01	13	004
10	SER01	002	6	0	0	0	0	0	0	00	0	00	00	00	0	0	26	01	13	015
04	MOV21	003	4	0	0	0	1	0	0	00	0	32	00	05	2	0	27	00	00	204
01	FET04	004	4	0	0	0	1	1	1	00	0	11	02	17	0	0	37	01	07	005
01	FET05	005	2	0	3	0	0	0	0	00	0	00	00	00	2	0	00	01	07	100
10	SER04	006	6	0	0	0	0	0	0	00	0	00	00	00	0	0	26	01	13	015
06	TRP08	007	5	0	0	0	0	1	1	00	0	11	02	17	0	0	00	01	14	115
06	TRP03	010	6	0	3	0	1	0	0	00	0	32	00	17	2	0	11	01	14	216
11	CON01	011	6	0	0	0	0	1	0	00	0	00	00	00	2	1	00	01	07	255
10	SER06	012	3	0	0	0	0	0	2	00	0	00	00	00	0	0	00	01	13	020
01	FET00	013	3	0	0	0	0	1	1	00	0	00	00	00	0	1	00	01	07	001
10	SER09	014	3	0	0	0	0	0	0	00	0	00	00	00	0	0	00	01	13	022
10	SER05	015	2	0	0	0	0	0	0	00	0	00	00	00	0	0	00	01	13	010
01	FET02	016	3	0	0	0	0	1	1	00	0	00	00	00	0	0	00	01	07	001
10	SER02	017	6	0	0	0	0	0	0	00	0	00	00	00	2	0	26	01	13	015
10	SER07	020	4	0	0	0	0	0	2	00	0	00	00	00	0	0	25	01	13	021
10	SER08	021	2	0	0	0	0	0	0	00	0	00	00	00	0	0	00	01	13	014
10	SER10	022	6	0	3	1	0	0	0	00	0	00	00	00	1	0	07	01	14	023
10	SER11	023	2	0	0	0	0	0	0	00	0	00	00	00	0	0	00	01	14	006
11	CON03	024	4	0	0	0	1	0	0	00	0	00	00	00	2	0	00	01	00	026
06	RST01	025	7	0	0	0	0	0	0	00	0	00	00	00	2	0	02	00	00	040
11	CON04	026	6	0	0	0	0	0	0	00	0	00	00	00	2	0	06	00	00	046
11	CON07	027	4	0	0	0	1	0	0	00	0	32	14	17	2	0	00	00	00	044
11	CON05	030	6	0	0	0	0	0	0	00	0	00	00	00	2	0	00	00	00	315
12	EXM06	031	5	0	0	0	1	0	1	00	0	32	10	17	2	0	00	00	00	060
12	STA00	032	6	0	3	0	0	0	0	00	0	00	00	00	2	0	10	01	07	076
12	LAD03	033	4	0	0	0	1	0	0	00	0	23	00	00	2	0	00	00	00	030
12	DEP00	034	2	0	0	0	0	1	0	00	0	00	00	00	0	1	00	01	17	062
12	EXM00	035	2	0	0	0	0	1	0	00	0	00	00	00	0	1	00	01	17	053
12	CNT00	036	2	0	0	0	0	0	0	00	0	00	00	00	0	0	00	01	07	017
12	LAD00	037	5	0	0	0	0	1	1	00	0	32	10	17	1	0	00	00	00	051

NOTE: THE COMPLEMENT OF THE ACTUAL ROM OUTPUT FOR THE UPF FIELD IS LISTED HERE FOR CLARITY.

FLOWS	STATE	ADR	CLK	CIR	WR	CB	CD	CBA	BUS	DAD	SPS	ALU	SBC	SBM	SDM	SBA	UBF	SRx	RIF	UPF
06	RST02	040	2	0	0	0	0	0	0	00	0	00	00	00	2	0	00	00	00	042
11	CON02	041	7	0	0	0	0	0	2	00	7	00	00	00	2	0	00	00	00	024
06	RST04	042	2	0	0	0	0	0	0	00	0	00	00	00	2	0	00	00	00	011
06	RST03	043	2	0	0	0	0	0	0	00	0	00	00	00	2	0	00	00	00	016
11	CON08	044	6	0	3	0	0	0	0	00	0	00	00	00	2	0	12	01	15	047
11	CON10	045	6	0	0	0	0	0	0	00	0	00	00	00	0	0	30	01	07	050
11	CON06	046	2	0	0	0	0	0	0	00	0	00	00	00	2	0	00	00	00	026
11	CON09	047	6	0	3	0	1	0	0	00	0	11	01	17	2	0	00	01	15	044
11	CON11	050	6	0	0	0	1	0	0	00	0	00	00	00	0	0	00	01	17	030
12	LAD01	051	6	0	3	0	0	0	0	00	0	00	00	00	1	0	05	01	17	052
12	LAD02	052	4	0	0	0	1	1	0	00	0	00	00	00	2	1	00	01	17	032
12	EXM01	053	6	0	0	0	0	0	0	00	0	00	00	00	2	0	04	00	00	054
12	EXM02	054	6	0	3	0	1	1	0	00	0	11	07	17	2	0	00	01	17	056
12	EXM05	055	4	0	0	0	1	0	0	00	0	00	00	00	0	0	00	02	00	030
12	EXM04	056	6	0	0	0	0	0	0	01	0	00	00	00	0	0	04	01	17	055
12	EXM03	057	6	0	3	0	1	1	0	00	0	11	07	17	2	0	00	01	17	056
12	EXM07	060	2	0	0	1	0	0	0	00	0	00	00	00	1	0	00	00	00	061
12	EXM08	061	4	0	0	0	1	0	0	00	0	32	00	00	2	0	00	00	00	030
2	DEP01	062	6	0	0	0	0	0	0	00	0	00	00	00	2	0	03	00	00	063
12	DEP02	063	6	0	3	0	1	1	0	00	0	11	07	17	2	0	00	01	17	064
12	DEP03	064	6	0	3	0	1	1	0	00	0	11	07	17	2	0	00	01	17	065
12	DEP04	065	5	0	0	0	0	1	1	00	0	32	10	17	0	0	00	01	17	066
12	DEP05	066	2	0	0	1	0	0	0	00	0	00	00	00	1	0	00	00	00	067
12	DEP06	067	2	0	0	0	0	1	0	00	0	00	00	00	0	1	00	01	17	070
12	DEP07	070	6	0	0	0	1	0	0	01	0	32	00	00	2	0	03	00	00	071
12	DEP08	071	2	0	0	0	0	0	0	00	0	00	00	00	2	0	00	00	00	072
12	DEP09	072	3	0	0	0	0	0	5	00	0	00	00	00	2	0	00	00	00	030
12	DEP10	073	2	0	3	0	0	0	0	00	0	00	00	00	2	0	00	02	00	030
08	DOP21	074	2	0	0	1	0	0	0	00	3	00	00	00	2	0	00	00	00	366
9	SSL11	075	2	0	0	1	0	0	0	00	3	00	00	00	2	0	00	00	00	374
12	STA01	076	2	0	0	0	0	0	0	00	0	00	00	00	0	0	00	01	07	016
06	TRP15	077	2	0	0	0	0	0	0	00	0	00	00	00	0	0	00	01	10	140

DRN.	DATE 6-15-72	TITLE U WORD (ADR 000-077)	
CHK'D	DATE 7/16/72		
ENG.	DATE 7/16/72		
PROJ. ENG.	DATE 7/16/72	SIZE K / CODE CS / NUMBER M7232-0-1	REV. F
PROD.	DATE 6/30/72		
SHEET 9 OF 12		DIST.	

This drawing and specifications, herein, are the property of Digital Equipment Corporation and shall not be reproduced or copied or used in whole or in part as the basis for the manufacture or sale of items without written permission.

FLOWS	STATE	ADR	CLK	CIR	WR	CB	CD	CBA	BUS	DAD	SPS	ALU	SBC	SBM	SDM	SBA	UBF	SRX	RIF	UPF
01	FET07	100	2	0	0	0	0	0	0	00	0	00	00	00	0	0	00	01	13	126
06	RTI00	101	7	0	3	0	1	1	1	00	0	11	02	17	2	1	00	01	06	320
07	DOP02	102	2	0	0	1	0	0	0	00	0	00	00	00	0	0	31	04	00	364
07	DOP00	103	2	0	0	1	0	0	0	00	0	00	00	00	0	0	00	10	00	363
07	SSL02	104	4	0	0	0	1	0	0	14	0	00	00	00	0	0	31	04	00	373
07	SSL00	105	2	0	0	1	0	0	0	00	0	00	00	00	0	0	31	04	00	372
09	RSR00	106	6	0	0	1	1	0	0	00	1	00	00	00	3	0	00	04	00	271
09	RSR02	107	2	0	0	1	0	0	0	00	0	00	00	00	0	0	00	04	00	272
07	NBR00	110	2	0	0	0	0	0	0	00	0	00	00	00	0	0	16	01	13	347
07	BRA00	111	4	0	0	0	1	0	0	00	0	11	00	05	0	0	00	01	07	340
05	MRK00	112	6	0	0	1	1	0	0	00	0	11	00	00	2	0	00	01	13	353
06	TRP12	113	2	0	0	0	0	0	0	00	0	00	00	00	2	0	00	00	00	330
10	SER00	114	6	0	0	0	0	0	0	00	0	00	00	00	0	0	26	01	13	015
06	TRP09	115	2	0	3	0	0	0	0	00	0	00	00	00	1	0	00	01	10	326
07	CCC00	116	6	0	0	1	1	0	0	00	0	33	12	17	2	0	00	01	13	350
07	SCC00	117	6	0	0	1	1	0	0	00	0	33	12	17	2	0	16	01	13	352
08	DOP15	120	2	0	0	1	0	0	0	00	0	00	00	00	0	0	31	04	00	371
08	DOP13	121	2	0	0	1	0	0	0	00	0	00	00	00	0	0	00	01	11	370
11	CON00	122	6	0	0	0	0	1	0	00	0	00	00	00	2	1	00	01	07	255
10	SER03	123	6	0	0	0	0	0	0	00	0	00	00	00	0	0	26	01	13	015
06	RTS00	124	4	0	0	0	1	0	0	00	0	00	00	00	0	0	00	04	00	323
04	MOV22	125	7	0	0	0	0	0	0	12	3	00	00	00	2	0	16	00	00	375
06	TRP06	126	6	0	3	0	1	0	0	00	0	32	00	17	2	0	00	01	14	007
06	RST00	127	4	0	0	0	1	0	0	00	0	00	00	00	2	0	00	01	00	025
07	SOB00	130	4	0	0	0	1	0	0	00	0	17	00	00	0	0	00	10	00	342
		131	0	0	0	0	0	0	0	00	0	00	00	00	0	0	00	00	00	000
08	SXT00	132	4	0	0	0	1	0	0	14	0	03	00	00	2	0	27	00	00	360
		133	0	0	0	0	0	0	0	00	0	00	00	00	0	0	00	00	00	000
07	SWB00	134	2	0	0	1	0	0	0	00	0	00	00	00	0	0	00	04	00	135
07	SWB01	135	4	0	0	0	1	0	0	00	0	32	00	12	2	0	27	00	00	360
01	FET06	136	6	0	3	0	1	1	0	00	0	06	01	17	2	0	00	01	07	217
02	SRC10	137	4	0	0	0	1	0	0	00	0	32	00	02	0	0	36	01	13	251

NOTE: THE COMPLEMENT OF THE ACTUAL ROM OUTPUT FOR THE UPF FIELD IS LISTED HERE FOR CLARITY.

FLOWS	STATE	ADR	CLK	CIR	WR	CB	CD	CBA	BUS	DAD	SPS	ALU	SBC	SBM	SDM	SBA	UBF	SRX	RIF	UPF
06	TRP10	140	2	0	0	0	0	0	0	00	7	00	00	30	0	0	04	01	10	332
02	SRC00	141	2	0	0	0	0	1	1	01	0	00	00	00	0	1	00	10	00	247
02	SRC01	142	4	0	0	0	1	1	1	01	0	11	03	17	0	1	00	10	00	240
02	SRC04	143	7	0	3	0	1	1	1	00	0	11	02	17	2	1	00	10	00	245
02	SRC02	144	4	0	0	0	1	1	1	01	0	06	03	17	0	0	00	10	00	240
02	SRC05	145	7	0	3	0	1	1	1	00	0	06	01	17	2	0	00	10	00	245
02	SRC06	146	7	0	3	0	1	0	0	00	0	11	02	17	2	0	00	01	07	241
02	SRC09	147	7	0	3	0	1	0	0	00	0	11	02	17	2	0	00	01	07	243
06	TRP07	150	6	0	3	0	1	0	0	00	0	32	00	17	2	0	00	01	14	007
05	JMP00	151	4	0	0	0	1	0	0	00	0	00	00	00	0	0	15	04	00	300
05	JMP01	152	6	0	3	0	1	0	0	00	0	11	02	17	2	0	00	04	00	235
05	JMP05	153	7	0	3	0	1	1	1	00	0	11	02	17	2	1	15	04	00	303
05	JMP03	154	6	0	3	0	1	0	0	00	0	06	01	17	2	0	15	04	00	300
05	JMP06	155	7	0	3	0	1	1	1	00	0	06	01	17	2	0	15	04	00	303
05	JMP08	156	7	0	3	0	1	0	0	00	0	11	02	17	2	0	15	01	07	304
05	JMP07	157	7	0	3	0	1	0	0	00	0	11	02	17	2	0	00	01	07	301
04	MOV19	160	4	0	0	0	1	0	0	00	0	00	00	00	0	0	20	01	11	204
03	DST00	161	2	0	0	0	0	1	3	07	0	00	00	00	0	1	00	04	00	266
03	DST01	162	4	0	0	0	1	1	3	07	0	11	03	17	0	1	00	04	00	260
03	DST04	163	7	0	3	0	1	1	1	00	0	11	02	17	2	1	00	04	00	264
03	DST02	164	4	0	0	0	1	1	3	07	0	06	03	17	0	0	00	04	00	260
03	DST05	165	7	0	3	0	1	1	1	00	0	06	01	17	2	0	00	04	00	264
03	DST07	166	7	0	3	0	1	0	0	00	0	11	02	17	2	0	17	01	07	261
03	DST06	167	7	0	3	0	1	1	1	00	0	11	02	17	2	1	17	01	07	261
04	MOV18	170	4	0	0	0	1	0	0	00	0	00	00	00	0	0	20	10	00	204
04	MOV00	171	4	0	0	0	1	1	0	07	0	00	00	00	0	1	22	04	00	257
04	MOV01	172	4	0	0	0	1	1	0	07	0	11	03	17	2	1	22	04	00	257
04	MOV03	173	7	0	3	0	1	1	1	01	0	11	02	17	2	1	00	04	00	207
04	MOV02	174	4	0	0	0	1	1	0	07	0	06	03	17	2	0	22	04	00	257
04	MOV04	175	7	0	3	0	1	1	1	01	0	06	01	17	2	0	00	04	00	207
04	MOV06	176	7	0	3	0	1	0	0	00	0	11	02	17	2	0	17	01	07	206
04	MOV05	177	7	0	3	0	1	1	1	00	0	11	02	17	2	1	17	01	07	206

This drawing and specifications, herein, are the property of Digital Equipment Corporation and shall not be reproduced or copied or used in whole or in part as the basis for the manufacture or sale of items without written permission.

DRN	DATE 6-15-72	TITLE U WORD (ADR 100 -177)
CHK'D	DATE 6/17/72	
ENG	DATE 6/17/72	
PROJ ENG	DATE 6/17/72	SIZE K · CODE CS · NUMBER M7232-0-1 · REV. F
PROD	DATE 6/20/72	
SHEET 10 OF 12		DIST.

FLOWS	STATE	ADR	CLK	CIR	WR	CB	CD	CBA	BUS	DAD	SPS	ALU	SBC	SBM	SDM	SBA	UBF	SRx	RIF	UPF
04	MOV16	200	4	0	0	0	1	0	5	00	0	20	00	00	0	0	00	01	11	125
04	MOV17	201	4	0	0	0	1	0	5	00	0	11	16	17	0	0	00	10	00	125
04	MOV14	202	2	0	0	1	0	0	0	00	0	00	00	00	0	0	00	01	11	205
04	MOV13	203	2	0	0	1	0	0	0	00	0	00	00	00	0	0	00	10	00	205
04	MOV20	204	0	0	3	1	0	0	0	00	3	00	00	00	2	0	00	04	00	000
04	MOV15	205	6	0	3	0	1	0	7	00	0	32	00	10	2	0	00	01	11	125
04	MOV08	206	2	0	3	1	0	0	0	00	0	00	00	00	1	0	21	01	12	212
04	MOV11	207	2	0	3	1	0	0	0	00	0	00	00	00	1	0	22	01	12	210
04	MOV12	210	2	0	0	0	0	1	0	01	0	00	00	00	0	1	00	01	12	200
09	SSL10	211	2	0	0	0	0	0	0	00	1	00	00	00	2	0	00	00	00	367
04	MOV09	212	4	0	0	0	0	1	0	07	0	11	00	00	0	0	00	04	00	200
04	MOV10	213	5	0	0	0	0	1	1	01	0	11	00	00	0	0	00	04	00	207
06	TRP05	214	2	0	3	0	0	0	0	00	0	00	00	00	2	0	00	01	14	007
06	TRP02	215	5	0	0	0	0	1	1	00	0	11	02	17	0	0	00	01	14	115
06	TRP04	216	4	0	0	0	1	0	0	00	0	32	15	17	2	0	00	00	00	214
01	FET08	217	6	1	0	0	1	0	0	00	0	00	00	00	0	0	00	00	00	252
09	SSL06	220	4	0	0	0	1	0	5	17	0	00	00	00	2	0	00	01	12	211
09	SSL04	221	4	0	0	0	1	0	5	11	0	06	00	00	2	0	00	00	12	367
09	SSL08	222	4	0	0	0	1	0	0	14	0	00	00	00	0	0	00	01	12	253
09	SSL07	223	4	0	0	0	1	0	0	10	0	06	00	00	2	0	00	00	00	253
08	DOP07	224	4	0	0	0	1	0	5	17	0	00	00	00	0	0	00	10	00	367
08	DOP03	225	4	0	0	0	1	0	5	17	0	00	00	00	0	0	00	01	11	367
08	DOP04	226	2	0	0	1	0	0	0	00	0	00	00	00	0	0	00	10	00	365
08	DOP05	227	2	0	0	1	0	0	0	00	0	00	00	00	0	0	00	01	11	365
08	DOP09	230	4	0	0	0	1	0	0	14	0	00	00	00	0	0	00	10	00	254
08	DOP10	231	4	0	0	0	1	0	0	14	0	00	00	00	0	0	00	01	11	254
09	RSR06	232	6	0	0	1	1	0	0	00	1	32	00	00	3	0	00	00	00	275
09	RSR08	233	6	0	0	1	1	0	0	00	1	32	00	10	3	0	00	00	00	276
08	SXT01	234	4	0	0	0	1	0	5	14	0	03	00	00	2	0	00	00	00	367
05	JMP02	235	4	0	0	0	1	0	0	00	0	06	01	17	0	0	15	04	00	300
09	SSL05	236	4	0	0	0	1	0	5	00	0	32	00	12	2	0	00	00	00	367
03	DST16	237	4	0	0	0	1	0	0	00	0	32	00	02	0	0	34	01	13	270

NOTE: THE COMPLEMENT OF THE ACTUAL ROM OUTPUT FOR THE UPF FIELD IS LISTED FOR CLARITY.

FLOWS	STATE	ADR	CLK	CIR	WR	CB	CD	CBA	BUS	DAD	SPS	ALU	SBC	SBM	SDM	SBA	UBF	SRx	RIF	UPF
02	SRC03	240	3	0	3	0	0	0	0	00	0	00	00	00	2	0	35	10	00	250
02	SRC07	241	2	0	3	1	0	0	0	00	0	00	00	00	1	0	00	01	11	242
02	SRC08	242	4	0	0	0	0	1	1	01	0	11	00	00	0	0	00	10	00	247
02	SRC10	243	2	0	3	1	0	0	0	00	0	00	00	00	1	0	00	01	11	244
02	SRC11	244	5	0	0	0	0	1	1	00	0	11	02	00	0	0	00	10	00	245
02	SRC12	245	2	0	3	1	0	0	0	00	0	00	00	00	1	0	00	01	11	246
02	SRC13	246	2	0	0	0	0	1	1	01	0	00	00	00	0	1	00	01	11	247
02	SRC14	247	3	0	0	0	0	0	0	00	0	00	00	00	0	0	35	01	13	250
02	SRC15	250	2	0	3	1	0	0	0	00	0	00	00	00	1	0	00	01	11	120
02	SRC17	251	2	0	3	1	0	0	0	00	0	00	00	00	2	0	00	01	11	120
01	FET09	252	2	0	3	1	0	0	0	00	0	00	00	00	2	0	00	01	13	004
09	SSL12	253	2	0	0	0	0	0	0	00	1	00	00	00	2	0	00	00	00	075
08	DOP22	254	2	0	0	0	0	0	0	00	1	00	00	00	2	0	00	00	00	074
11	CON12	255	6	0	0	0	1	0	2	00	6	00	00	00	0	0	24	00	00	041
		256	0	0	0	0	0	0	0	00	0	00	00	00	0	0	00	00	00	000
08	MOV07	257	2	0	3	0	0	0	0	00	0	00	16	00	2	0	00	04	00	200
03	DST03	260	3	0	3	0	0	0	0	00	0	00	00	00	2	0	33	04	00	267
03	DST09	261	2	0	3	1	0	0	0	00	0	00	00	00	1	0	00	01	12	262
03	DST10	262	4	0	0	0	0	1	3	07	0	11	00	00	0	0	00	04	00	266
03	DST11	263	5	0	0	0	0	1	1	00	0	11	00	00	0	0	00	04	00	264
03	DST12	264	2	0	3	1	0	0	0	00	0	00	00	00	1	0	00	01	12	265
03	DST13	265	2	0	0	0	0	1	3	01	0	00	00	00	0	1	00	01	12	266
03	DST14	266	3	0	0	0	0	0	0	00	0	00	00	00	0	0	33	01	13	267
03	DST15	267	2	0	3	1	0	0	0	00	0	00	00	00	1	0	00	01	12	220
03	DST17	270	2	0	3	1	0	0	0	00	0	00	00	00	2	0	00	01	12	220
09	RSR01	271	6	0	3	0	1	0	0	00	0	32	00	00	2	0	27	04	00	274
09	RSR03	272	6	0	0	1	1	0	0	00	1	32	00	10	3	0	00	00	00	273
09	RSR04	273	6	0	1	0	1	0	0	00	0	32	00	02	2	0	27	04	00	274
09	RSR05	274	0	0	0	0	0	0	0	00	2	00	00	00	0	0	00	04	00	000
09	RSR07	275	4	0	0	0	1	0	5	00	0	32	00	00	2	0	00	00	00	277
09	RSR09	276	4	0	0	0	1	0	7	00	0	32	00	02	2	0	00	00	00	277
09	RSR10	277	3	0	0	0	0	0	0	00	2	00	00	00	2	0	16	00	00	376

This drawing and specifications, herein, are the property of Digital Equipment Corporation and shall not be reproduced or copied or used in whole or in part as the basis for the manufacture or sale of items without written permission.

DRN.	DATE 6-15-72	TITLE U WORD (ADR 200-277)
CHKD.	DATE 6/16/72	
ENG.	DATE 6/16/72	
PROJ. ENG.	DATE 6/16/72	SIZE K · CODE CS · NUMBER M7232-0-1 · REV. F
PROD.	DATE 6/20/72	
SHEET 11 OF 12		DIST.

FLOWS	STATE	ADR	CLK	CIR	WR	CB	CD	CBA	BUS	DAD	SPS	ALU	SBC	SBM	SDM	SBA	UBF	SRX	RIF	UPF
05	JMP04	300	2	0	3	1	0	0	0	00	0	00	00	00	2	0	00	01	10	306
05	JMP09	301	2	0	3	1	0	0	0	00	0	00	00	00	1	0	00	01	10	302
05	JMP10	302	5	0	0	0	1	1	1	00	0	11	00	00	0	0	15	04	00	303
5	JMP11	303	2	0	3	1	0	0	0	00	0	00	00	00	1	0	00	01	10	306
05	JMP14	304	2	0	3	1	0	0	0	00	0	00	00	00	1	0	00	01	10	305
05	JMP15	305	4	0	0	0	1	0	0	00	0	11	00	00	0	0	15	04	00	300
05	JMP12	306	4	0	0	0	1	0	0	00	0	00	00	00	0	0	16	01	10	313
05	JSR00	307	6	0	3	0	1	1	0	06	0	06	01	17	2	0	00	01	06	310
05	JSR01	310	5	0	0	0	1	0	5	00	0	00	00	00	0	0	00	10	00	311
05	JSR02	311	2	0	0	1	0	0	0	00	0	00	00	00	0	0	00	01	07	312
05	JSR03	312	6	0	3	0	1	0	0	00	0	32	00	00	2	0	00	10	00	306
05	JMP13	313	2	0	3	0	0	0	0	00	0	00	00	00	2	0	00	01	07	016
		314	0	0	0	0	0	0	0	00	0	00	00	00	0	0	00	00	00	000
11	CON13	315	2	0	0	0	0	0	0	00	0	00	00	00	0	0	06	00	00	046
		316	0	0	0	0	0	0	0	00	0	00	00	00	0	0	00	00	00	000
06	TRP01	317	6	0	3	0	1	0	0	00	0	32	00	17	2	0	00	01	14	215
06	RTI01	320	2	0	3	0	0	0	0	00	0	00	00	00	1	0	00	01	07	321
06	RTI02	321	7	0	3	0	1	1	1	00	0	11	02	17	2	1	00	01	06	322
06	RTI03	322	2	0	0	0	0	0	0	00	7	00	00	00	1	0	00	00	00	017
06	RTS01	323	2	0	3	0	0	0	0	00	0	00	00	00	2	0	00	01	07	324
06	RTS02	324	7	0	3	0	1	1	1	00	0	11	02	17	2	1	16	01	06	325
06	RTS03	325	2	0	3	0	0	0	0	00	0	00	00	00	1	0	00	04	00	016
06	TRP10	326	6	0	3	0	1	1	0	06	0	06	01	17	2	0	00	01	06	327
06	TRP11	327	5	0	0	0	1	0	5	00	6	00	02	00	0	0	00	00	00	113
06	TRP13	330	6	0	3	0	1	1	0	06	0	06	01	17	2	0	00	01	06	331
06	TRP14	331	5	0	0	0	1	0	5	00	0	00	00	00	0	0	00	01	07	077
06	TRP20	332	3	0	0	0	0	1	1	00	0	00	00	00	0	1	01	01	14	333
06	TRP21	333	2	0	3	0	0	0	0	00	0	00	00	00	1	0	03	01	07	122
06	TRP18	334	5	0	0	0	0	1	1	00	0	11	02	17	0	0	00	01	14	335
06	TRP19	335	2	0	0	0	0	0	0	00	7	00	00	00	1	0	00	00	00	332
06	TRP00	336	6	0	3	0	1	0	0	00	0	32	17	17	2	0	00	01	06	317
06	TRP17	337	6	0	3	0	1	0	0	00	0	32	11	17	2	0	00	01	14	334

NOTE: THE COMPLEMENT OF THE ACTUAL ROM OUTPUT FOR THE UPF FIELD IS LISTED FOR CLARITY.

FLOWS	STATE	ADR	CLK	CIR	WR	CB	CD	CBA	BUS	DAD	SPS	ALU	SBC	SBM	SDM	SBA	UBF	SRX	RIF	UPF
07	BRA01	340	2	0	3	0	0	0	0	00	0	00	00	00	2	0	16	01	07	341
07	BRA02	341	6	0	3	0	1	0	0	00	0	11	00	05	2	0	00	01	07	016
07	SOB01	342	2	0	3	0	0	0	0	00	0	00	00	00	2	0	12	10	00	343
07	SOB02	343	6	0	0	1	1	0	0	00	0	33	13	17	2	0	00	01	13	344
07	SOB03	344	6	0	3	0	1	0	0	10	0	06	00	00	2	0	16	01	07	346
07	SOB05	345	2	0	0	0	0	0	0	00	0	00	00	00	2	0	16	00	00	347
07	SOB04	346	6	0	3	0	1	0	0	10	0	06	00	00	2	0	00	01	07	016
07	SOB06	347	2	0	0	0	0	0	0	00	0	00	00	00	0	0	00	01	13	016
07	CCC01	350	6	0	0	1	1	0	0	00	0	25	00	00	2	0	16	00	00	351
07	CCC02	351	6	0	0	0	1	0	0	00	3	33	00	00	2	0	00	00	00	016
07	SCC01	352	6	0	0	0	1	0	0	00	3	36	00	00	2	0	00	00	00	016
05	MRK01	353	6	0	3	0	1	1	1	00	0	11	00	05	2	0	00	01	07	354
05	MRK02	354	4	0	0	0	1	0	0	00	0	11	02	17	0	0	00	01	07	355
05	MRK03	355	3	0	3	0	0	0	0	00	0	00	00	00	2	0	00	01	06	356
05	MRK04	356	6	0	3	0	1	0	0	00	0	00	00	00	1	0	16	01	05	357
05	MRK05	357	2	0	3	0	0	0	0	00	0	00	00	00	2	0	00	01	07	016
08	DOP19	360	0	0	3	0	0	0	0	00	3	00	00	00	2	0	00	04	00	000
08	DOP18	361	0	0	1	0	0	0	0	00	3	00	00	00	2	0	00	04	00	000
08	DOP17	362	0	0	0	0	0	0	0	00	3	00	00	00	2	0	00	00	00	000
07	DOP01	363	4	0	0	0	1	0	0	10	0	06	00	00	0	0	27	04	00	360
08	DOP03	364	4	0	0	0	1	0	0	14	0	00	00	00	0	0	27	10	00	360
08	DOP06	365	4	0	0	0	1	0	5	10	0	06	00	00	0	0	00	01	12	367
08	DOP11	366	5	0	0	0	1	0	7	13	0	32	00	10	2	0	16	00	00	375
08	DOP12	367	3	0	0	0	0	0	0	12	3	00	00	00	2	0	16	00	00	375
08	DOP14	370	4	0	0	0	1	0	0	10	0	06	00	00	0	0	27	04	00	360
08	DOP10	371	4	0	0	0	1	0	0	14	0	00	00	00	0	0	27	01	11	360
07	SSL01	372	4	0	0	0	1	0	0	10	0	06	00	00	2	0	27	00	00	360
07	SSL03	373	2	0	0	0	0	0	0	00	1	00	00	00	2	0	27	00	00	360
09	SSL09	374	5	0	0	0	1	0	7	13	0	32	00	10	2	0	16	00	00	375
08	DOP20	375	2	0	0	0	0	0	0	00	0	00	00	00	2	0	00	00	00	016
09	RSR11	376	2	0	0	0	0	0	0	00	0	00	00	00	2	0	00	00	00	016
		377	0	0	0	0	0	0	0	00	0	00	00	00	0	0	00	00	00	000

This drawing and specifications, herein, are the property of Digital Equipment Corporation and shall not be reproduced or copied or used in whole or in part as the basis for the manufacture or sale of items without written permission.

DRN.	DATE 3-5-72	TITLE U WORD (ADR 300-377)
CHK'D	DATE 6/16/72	
ENG.	DATE 6/16/72	
PROJ. ENG.	DATE 6/16/72	SIZE K · CODE CS · NUMBER M7232-0-1 · REV. F
PROD.	DATE 6/16/72	
SHEET 12 OF 12		DIST.

NOTES:

1. PIN NOTATION THROUGHOUT IS ORDERED UPON MODULE PLACEMENT IN THE KD11-A PROCESSOR. MODULE REFERENCE ALONE IS OBTAINED BY DELETING THE NUMBER (SLOT LOCATION) AFTER THE FIRST LETTER.
2. ALL SIGNALS THAT HAVE MODULE PINS ARE SO NOTED. OUTPUT SIGNALS WITH MODULE PINS ARE BROUGHT TO THE RIGHT SIDE OF THE PRINT.
3. PROCESSOR SIGNAL PREFIX NOTATION (K2-1 FOR EXAMPLE) IDENTIFIES THE SIGNAL SOURCE (PRINT AND MODULE). THE FIRST NUMBER AFTER THE K INDICATES THE MODULE PRINT SET, WHILE THE SECOND INDICATES THE SHEET WITHIN THE SET. SIGNALS WITH A "BUS" PREFIX REPRESENT A "WIRED OR" SITUATION, AND MULTIPLE SOURCES FOR THE SIGNAL CAN EXIST.
4. UNLESS OTHERWISE NOTED: RESISTANCE IS IN OHMS; CAPACITANCE IS IN PICOFARRADS.

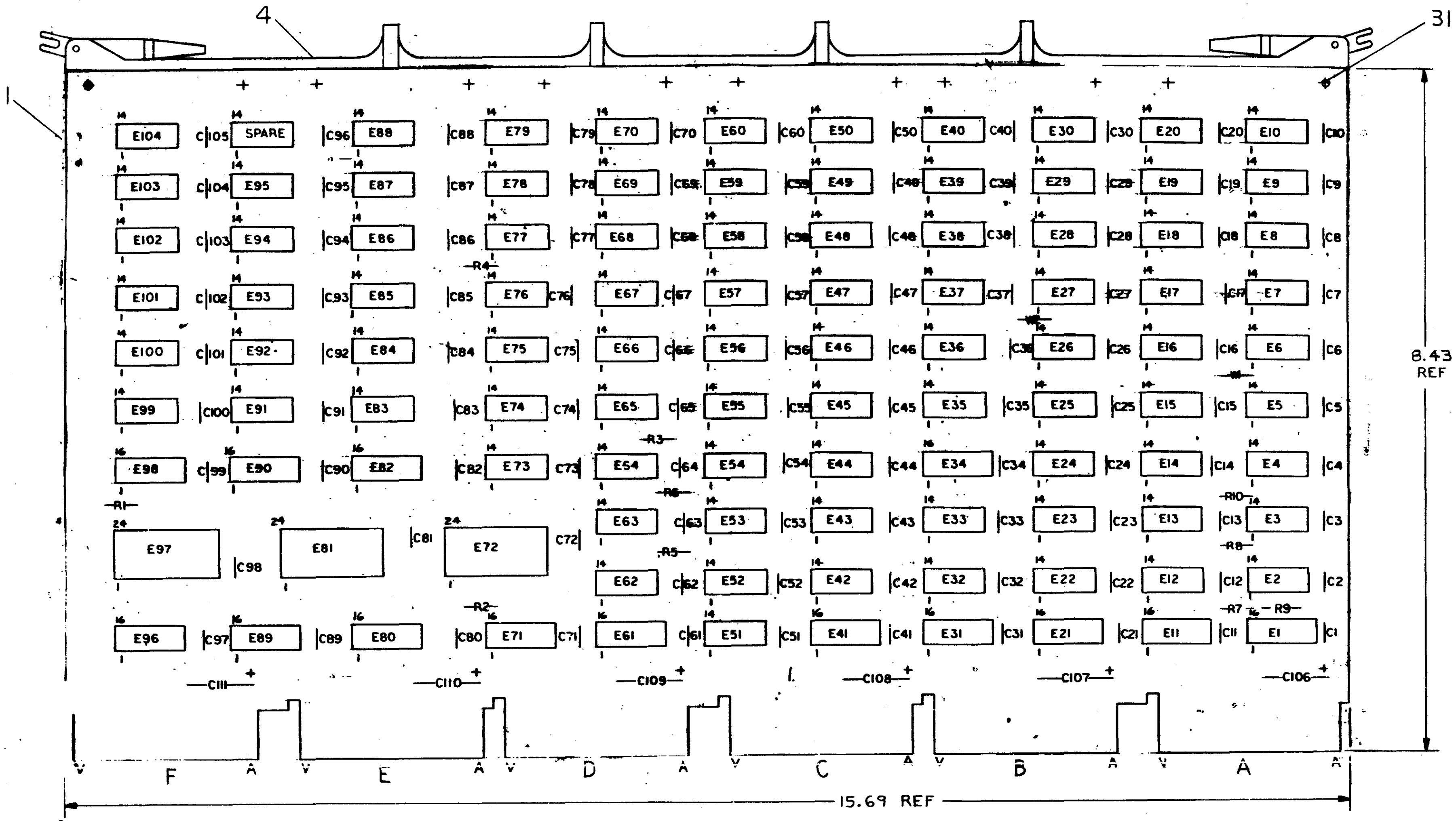

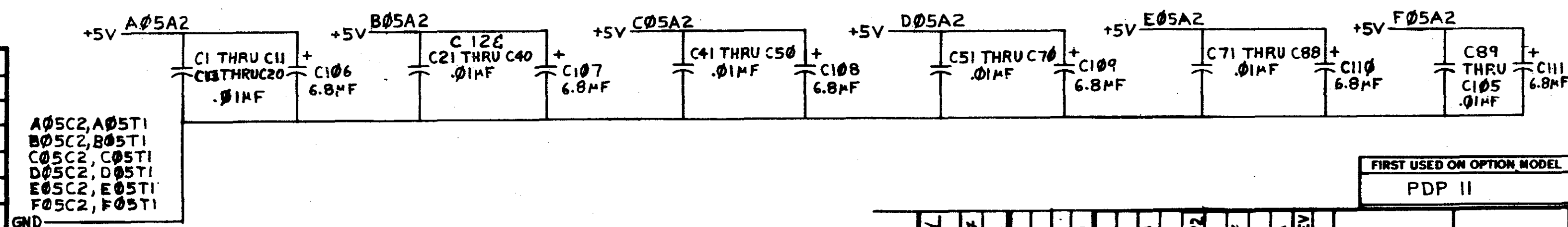

QTY	REF DESIGNATION	DESCRIPTION	PART NO.	ITEM NO.
2	W1, W2	INSULATED JUMPER	9009185	32
12		EYELET	9006732	31
1	E1	I.C. DEC 74157	1910655	30
4	E21, E71, E96, E41	I.C. DEC 74175	1910651	29
3	E81, E97, E72	I.C. DEC 74150	1910153	28
1	E82	I.C. DEC 74153	1909937	27
2	E90, E98	I.C. DEC 74151	1909936	26
11	E5, E8, E29, E33, E37, E45 E62, E75, E86, E92, E95	I.C. DEC 74HC4	1909931	25
6	E11, E31, E34, E61, E80, E89	I.C. DEC 8251	1909594	24
6	E20, E22, E23, E27, E32, E56	I.C. DEC 8815	1909713	23
7	E14, E36, E51, E79, E83 E84, E59	I.C. DEC 74H11	1909267	22
1	E26	I.C. DEC 74H61	1909065	21
2	E6, E7	I.C. DEC 74H60	1909064	20
3	E39, E17, E57	I.C. DEC 74H53	1909062	19
5	E4, E28, E52, E53, E54	I.C. DEC 74H52	1909061	18
3	E87, E49, E19	I.C. DEC 74H50	1909060	17
5	E24, E67, E68, E69, E70	I.C. DEC 74H30	1909059	16
4	E12, E13, E38, E102	I.C. DEC 74H21	1909058	15
8	E15, E40, E42, E64, E77 E104, E47, E101	I.C. DEC 74H10	1909057	14
14	E2, E3, E18, E35, E43, E48 E58, E73, E76, E78, E85 E88, E93, E99	I.C. DEC 74H00	1909056	13
7	E9, E10, E16, E44, E60 E100, E103	I.C. DEC 7402	1909004	12
7	E25, E30, E46, E55 E65, E66, E94.	I.C. DEC 74H20	1905635	11
1	E50	I.C. DEC 74H40	1905586	10
3	E63, E74, E91	I.C. DEC 7400	1905575	6
10	R1 THRU R10	RES. 1K 1/4W ±5%	1300365	5
1		HANDLE MODULE	1210711-02	4
105	C1 THRU C105	CAP .Ø1MF 100V ±20% DISC	1001610	3
6	C106 THRU C111	CAP 6.8MF 35V ±20% STANT	1000067	2
1		ETCHED CIRCUIT BOARD	5009982	1

PARTS LIST

IC PIN LOCATIONS

IC TYPE	GND	+5V
DEC 74157	8	16
DEC 74175	8	16
DEC 74150	12	24
DEC 74153	8	16
DEC 74151	8	16
DEC 8251	8	16

GND AND 5V ARE USUALLY PIN 7 AND 14 RESPECTIVELY. EXCEPTIONS ARE STATED ABOVE

FIRST USED ON OPTION MODEL: PDP 11

ETCH BOARD REV: C D

REV	CHANGE NO.	ORIGINATED
A	M7233-00001	J. O'LOUGHLIN 8-28-72
B	M7233-00002	J. O'LOUGHLIN 2-2-73
C	M7233-00003	J. O'LOUGHLIN
D	M7233-00004	J. SOFIO 4-22-74
E		5-16-74

SEMICONDUCTOR CONVERSION CHART

DEC NO.	EIA NO.	DEC NO.	EIA NO.

DRN DATE 6-13-72

digital EQUIPMENT CORPORATION MAYNARD, MASSACHUSETTS

TITLE: IR DECODE

K3-1

NEXT HIGHER ASSY: KD11-A

SIZE D CODE CS NUMBER M7233-Ø-1 REV. E

SCALE —

SHEET 1 OF 9

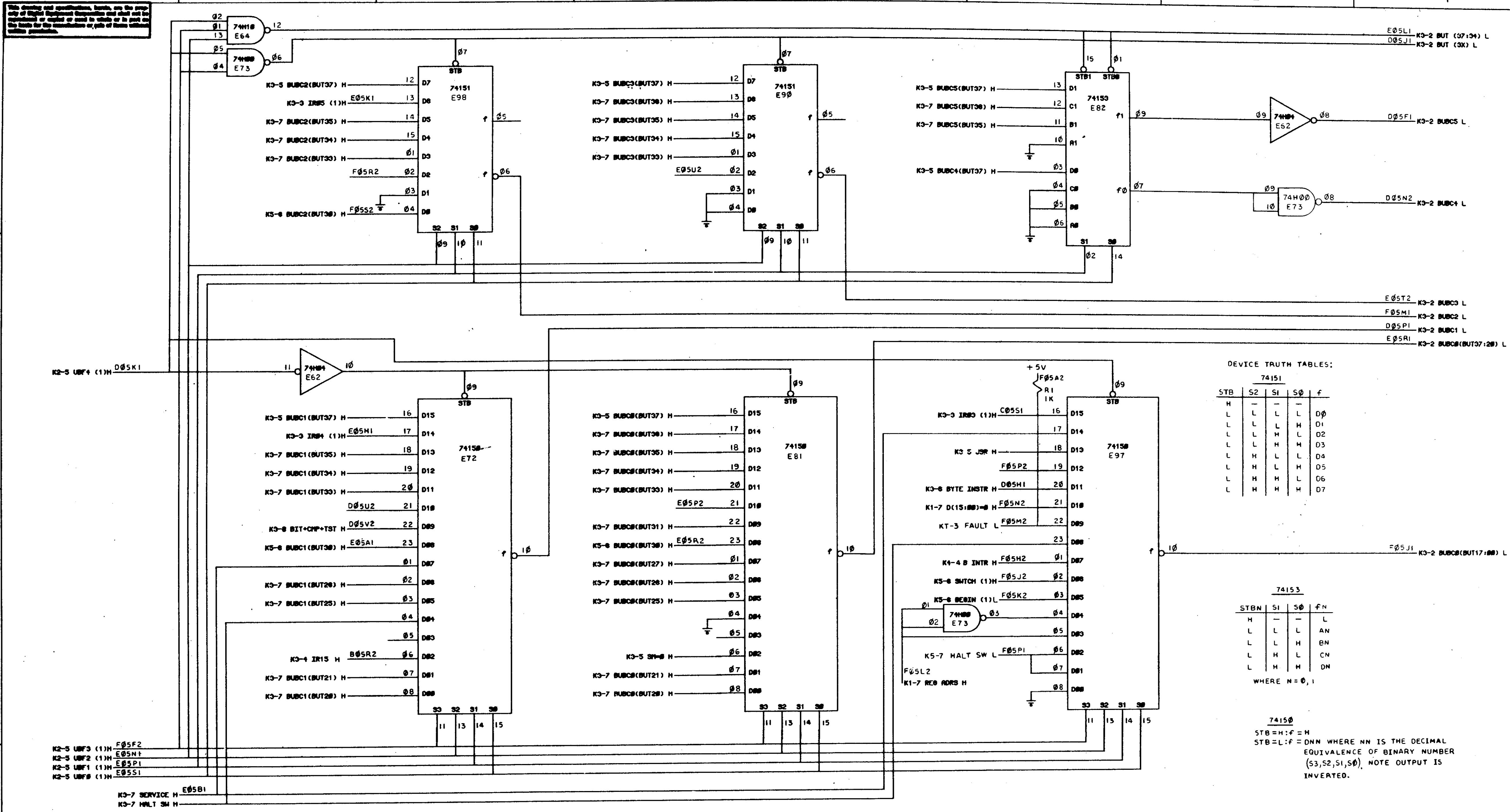

DEVICE TRUTH TABLES:

74151

STB	S2	S1	SØ	f
H	—	—	—	
L	L	L	L	DØ
L	L	L	H	D1
L	L	H	L	D2
L	L	H	H	D3
L	H	L	L	D4
L	H	L	H	D5
L	H	H	L	D6
L	H	H	H	D7

74153

STBN	S1	SØ	fN
H	—	—	L
L	L	L	AN
L	L	H	BN
L	H	L	CN
L	H	H	DN

WHERE N = Ø, 1

74150

STB = H : f = H
STB = L : f = DNN WHERE NN IS THE DECIMAL EQUIVALENCE OF BINARY NUMBER (S3, S2, S1, SØ). NOTE OUTPUT IS INVERTED.

-PRODUCED BY THE AUTOMATED DRAFTING SYSTEM-

UNLESS OTHERWISE SPECIFIED

DIMENSIONS IN INCHES

TOLERANCES

DECIMALS ± .005 FRACTIONS ± 1/64 ANGLES ± 0°30'

FINAL SURFACE QUALITY ✓

REMOVE BURRS AND BREAK SHARP CORNERS

MATERIAL

FINISH

DRN DATE 2-2-72

CHKD DATE

FIRST USED ON PDP11

SCALE

SHEET 2 OF 9

EQUIPMENT CORPORATION
MAYNARD, MASSACHUSETTS

TITLE
IR DECODE
BUT MUX K3-2

SIZE	CODE	NUMBER	REV.
D	CS	M7233-Ø-1	E

DIST.

1 AUG 25 1972

This drawing and specifications, herein, are the property of Digital Equipment Corporation and shall not be reproduced or copied or used in whole or in part as the basis for the manufacture or sale of items without written permission.

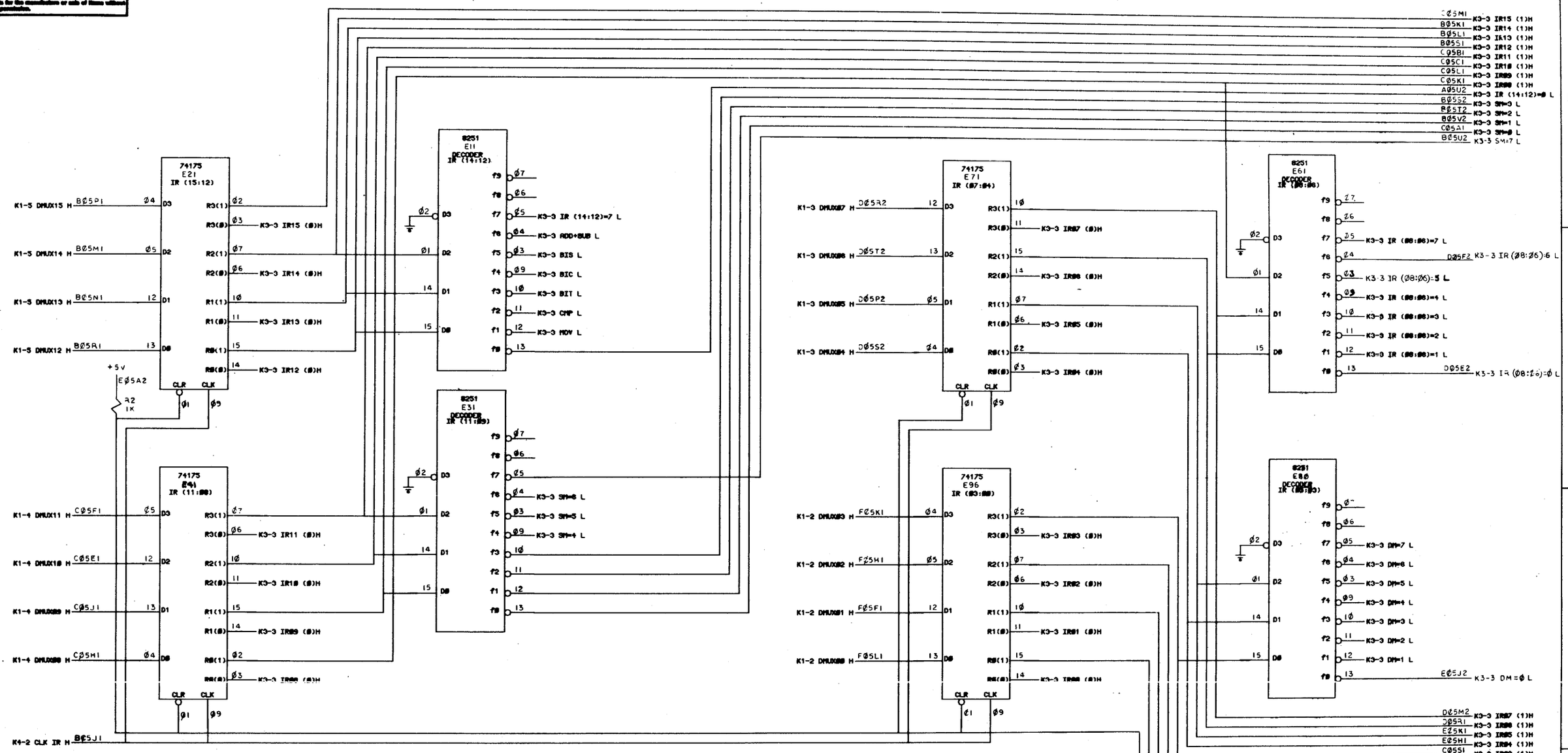

DEVICE TRUTH TABLE:

8251

FOR THE DECIMAL EQUIVALENCE, N, OF THE BINARY NUMBER (D3,D2,D1,DØ), ONLY OUTPUT ƒN IS ACTIVE (LOW) FOR Ø ≤ N < 1Ø

-PRODUCED BY THE AUTOMATED DRAFTING SYSTEM-

UNLESS OTHERWISE SPECIFIED DIMENSION IN INCHES TOLERANCES DECIMALS ±.005 FRACTIONS ±1/64 ANGLES ±0°30' FINAL SURFACE QUALITY ✓ REMOVE BURRS AND BREAK SHARP CORNERS	DRN R.Bradley DATE 2-2-72 CHKD J.Haughin DATE 2/22/72 ENG J.Haughin DATE 2/23/72 MGR J.Haughin DATE 2/23/72 MGR J.Stringer DATE 2/23/72	DIGITAL EQUIPMENT CORPORATION MAYNARD, MASSACHUSETTS	
MATERIAL	FINISH	TITLE IR DECODE IR & DECODE K3-3	
	FIRST USED ON PDP11	SCALE —	SIZE D · CODE CS · NUMBER M7233-Ø-1 · REV E
		SHEET 3 OF 9	DIST.

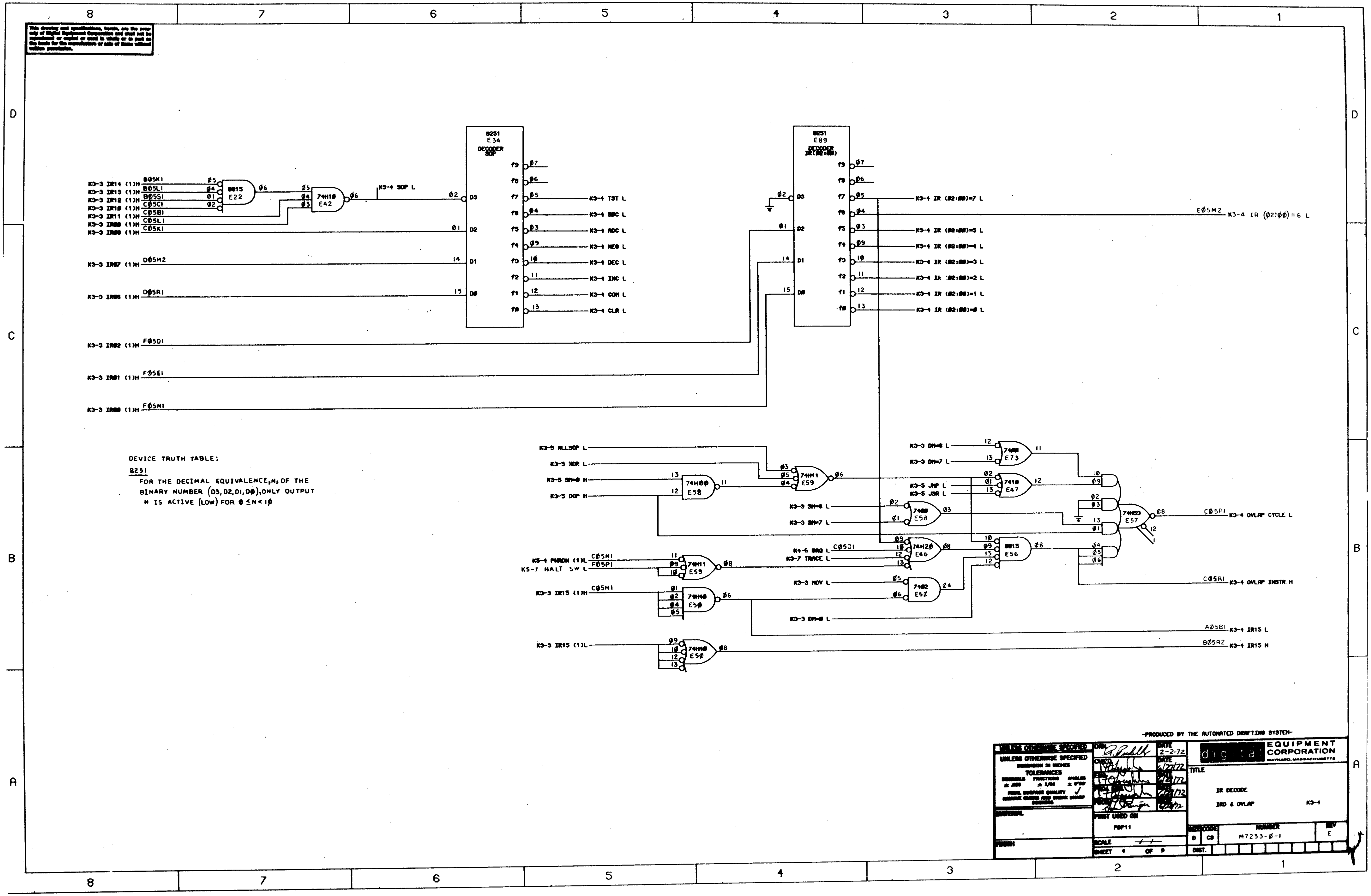
8251 E34 DECODER SOP
8251 E89 DECODER IR(02:00)
8815 E22
74H10 E42
K3-4 SOP L
K3-3 IR14 (1)H
K3-3 IR13 (1)H
K3-3 IR12 (1)H
K3-3 IR10 (1)H
K3-3 IR11 (1)H
K3-3 IR07 (1)H
K3-3 IR06 (1)H
K3-3 IR02 (1)H
K3-3 IR01 (1)H
K3-4 TST L
K3-4 SBC L
K3-4 ADC L
K3-4 NEG L
K3-4 DEC L
K3-4 INC L
K3-4 COM L
K3-4 CLR L
K3-4 IR (02:00)=7 L
K3-4 IR (02:00)=6 L
K3-4 IR (02:00)=5 L
K3-4 IR (02:00)=4 L
K3-4 IR (02:00)=3 L
K3-4 IR (02:00)=2 L
K3-4 IR (02:00)=1 L
K3-4 IR (02:00)=0 L
DEVICE TRUTH TABLE:
8251
FOR THE DECIMAL EQUIVALENCE,N, OF THE BINARY NUMBER (D3,D2,D1,D0),ONLY OUTPUT N IS ACTIVE (LOW) FOR 0 ≤N<10
K3-5 ALLSOP L
K3-5 XOR L
K3-5 SM-0 H
K3-5 DOP H
K3-3 DM-6 L
K3-3 DM-7 L
K3-5 JMP L
K3-5 JSR L
K3-3 SM-6 L
K3-3 SM-7 L
K4-6 BRQ L
K3-7 TRACE L
K5-4 PWRON (1)L
K5-7 HALT SW L
K3-3 IR15 (1)H
K3-3 MOV L
K3-3 DM-0 L
K3-3 IR15 (1)L
K3-4 OVLAP CYCLE L
K3-4 OVLAP INSTR H
K3-4 IR15 L
K3-4 IR15 H
-PRODUCED BY THE AUTOMATED DRAFTING SYSTEM-
UNLESS OTHERWISE SPECIFIED
TOLERANCES
DATE 2-2-72
EQUIPMENT CORPORATION
MAYNARD, MASSACHUSETTS
TITLE
IR DECODE
IRD & OVLAP
K3-4
FIRST USED ON
PDP11
SHEET 4 OF 9
D CS M7233-0-1
REV E

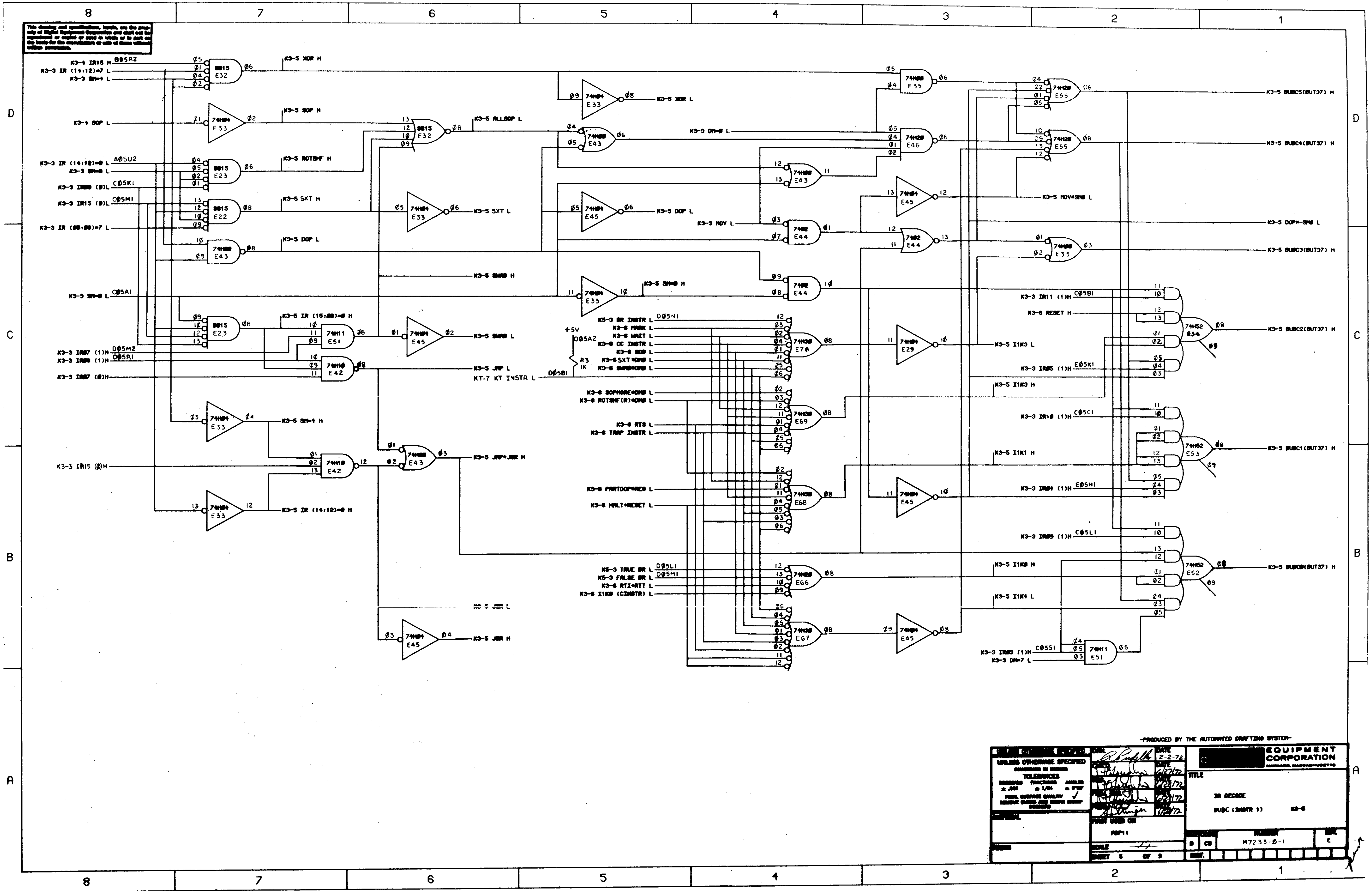
K3-4 IR15 H
K3-3 IR (14:12)=7 L
K3-3 SM=4 L
K3-5 XOR H
K3-5 XOR L
K3-4 SOP L
K3-5 SOP H
K3-5 ALLSOP L
K3-3 DM=0 L
K3-5 BUBC5(BUT37) H
K3-5 BUBC4(BUT37) H
K3-3 IR (14:12)=0 L
K3-3 SM=0 L
K3-5 ROTSHF H
K3-3 IR15 (0)L
K3-5 SXT H
K3-5 SXT L
K3-5 DOP L
K3-3 IR (08:00)=7 L
K3-5 DOP L
K3-3 MOV L
K3-5 MOV*SM0 L
K3-5 DOP*-SM0 L
K3-5 BUBC3(BUT37) H
K3-5 SWAB H
K3-5 SM=0 H
K3-5 IR (15:00)=0 H
K3-5 SWAB L
K3-5 JMP L
KT-7 KT INSTR L
K3-3 IR11 (1)H
K3-6 RESET H
K3-5 BUBC2(BUT37) H
K3-5 I1K3 L
K3-5 I1K3 H
K3-3 IR10 (1)H
K3-5 I1K1 H
K3-5 BUBC1(BUT37) H
K3-3 IR04 (1)H
K3-5 SM=4 H
K3-5 JMP+JSR H
K3-5 IR (14:12)=0 H
K3-3 IR09 (1)H
K3-5 I1K0 H
K3-5 BUBC0(BUT37) H
K3-5 I1K4 L
K3-5 JSR H
K3-3 IR03 (1)H
K3-3 DM=7 L
+5V
R3 1K
-PRODUCED BY THE AUTOMATED DRAFTING SYSTEM-
EQUIPMENT CORPORATION
UNLESS OTHERWISE SPECIFIED
TOLERANCES
DATE 2-2-72
TITLE
IR DECODE
BUBC (INSTR 1)
K3-6
FIRST USED ON
PDP11
D CS
M7233-0-1
E
SHEET 5 OF 9

This drawing and specifications, herein, are the property of Digital Equipment Corporation and shall not be reproduced or copied or used in whole or in part as the basis for the manufacture or sale of items without written permission.

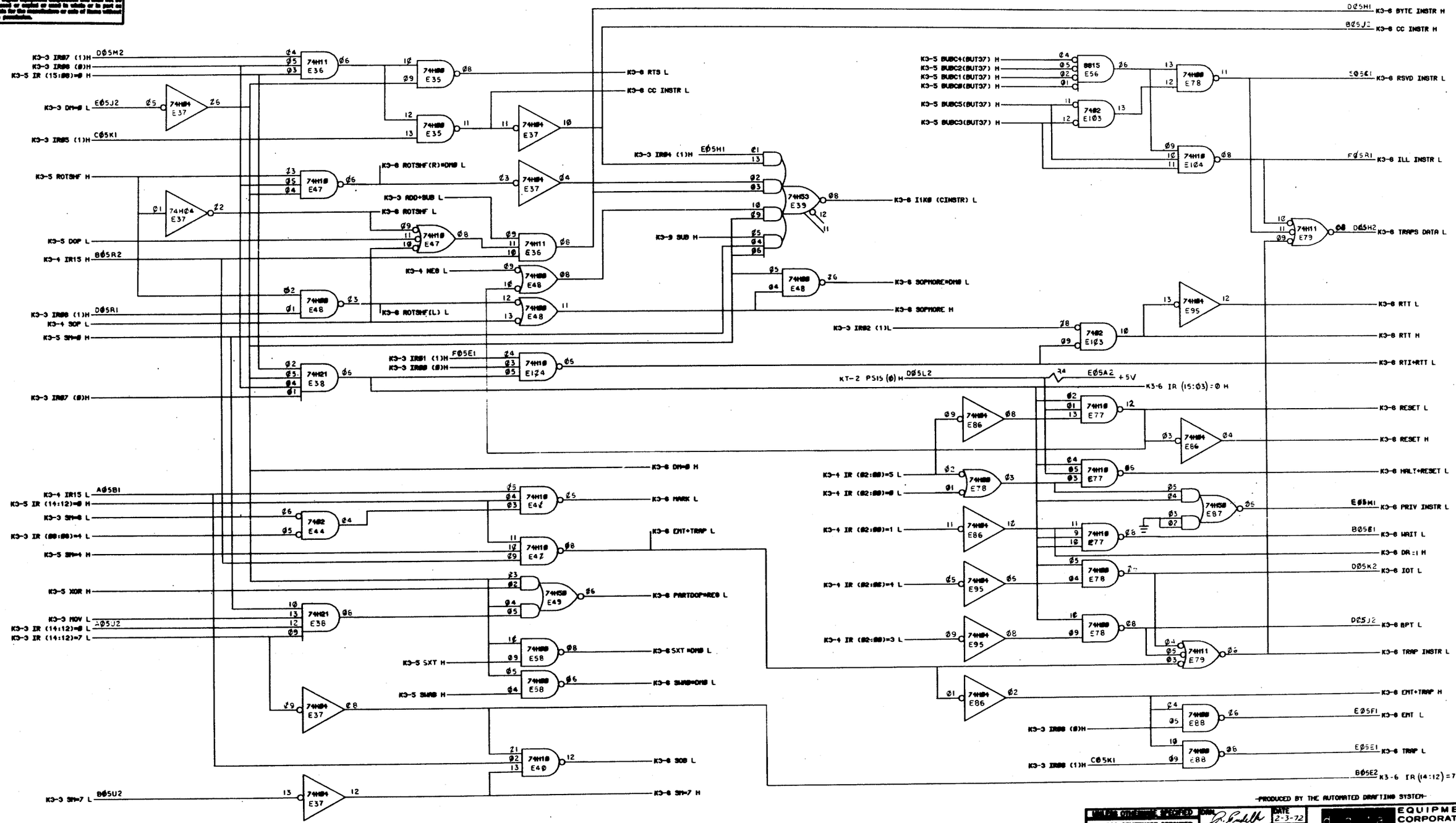

-PRODUCED BY THE AUTOMATED DRAFTING SYSTEM-

UNLESS OTHERWISE SPECIFIED
DIMENSIONS IN INCHES
TOLERANCES
DECIMALS ± .005 FRACTIONS ± 1/64 ANGLES ± 0°30'
FINAL SURFACE QUALITY
MATERIAL
FINISH

DRN. R. Gadette DATE 2-3-72
CHK'D DATE 6/27/72
DATE 7/28/72
DATE 7/28/72
DATE 8/8/72

FIRST USED ON
PDP11

SCALE
SHEET 8 OF 9

DIGITAL EQUIPMENT CORPORATION
MAYNARD, MASSACHUSETTS

TITLE
IR DECODE
IRD DISCRETE K3-6

SIZE D CODE CS NUMBER M7233-0-1 REV. E
DIST.

1 AUG 25 1971

This drawing and specifications, herein, are the property of Digital Equipment Corporation and shall not be reproduced or copied or used in whole or in part as the basis for the manufacture or sale of items without written permission.

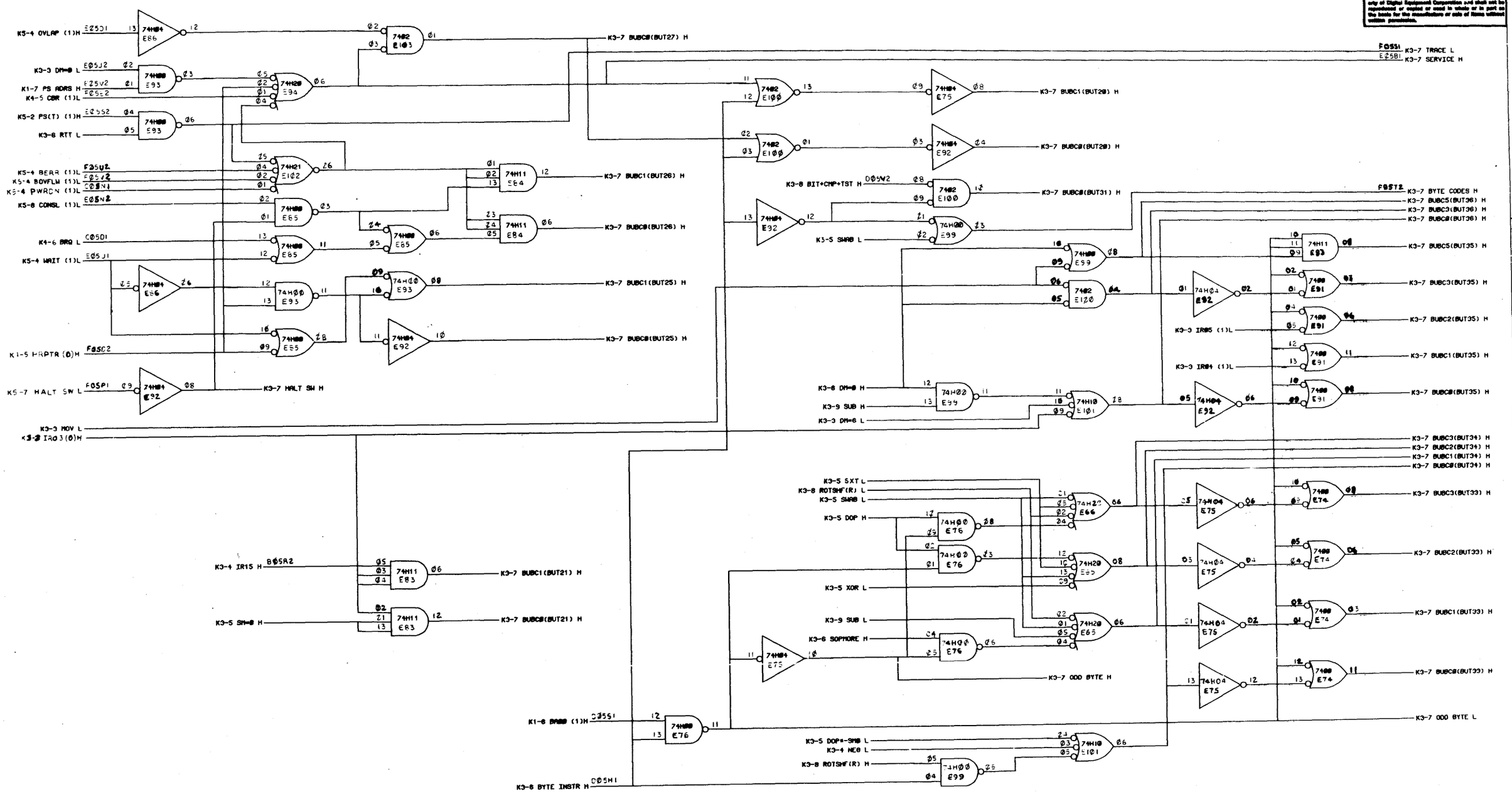

-PRODUCED BY THE AUTOMATED DRAFTING SYSTEM-

UNLESS OTHERWISE SPECIFIED	DRN.	DATE 2-2-72	digital EQUIPMENT CORPORATION MAYNARD, MASSACHUSETTS
UNLESS OTHERWISE SPECIFIED DIMENSION IN INCHES TOLERANCES DECIMALS ± .005 FRACTIONS ± 1/64 ANGLES ± 0°30' FINAL SURFACE QUALITY ✓ REMOVE BURRS AND BREAK SHARP CORNERS	CHKD.	DATE 6/27/72	TITLE IR DECODE BUBC (OTHER) K3-7
MATERIAL	ENG.	DATE 6/28/72	
FINISH	PROD.	DATE 6/28/72	
	FIRST USED ON PDP11		SIZE D CODE CS NUMBER M7233-0-1 REV. E
	SCALE —		DIST.
	SHEET 7 OF 9		

AUG 24

This drawing and specifications, herein, are the property of Digital Equipment Corporation and shall not be reproduced or copied or used in whole or in part as the basis for the manufacture or sale of items without written permission.

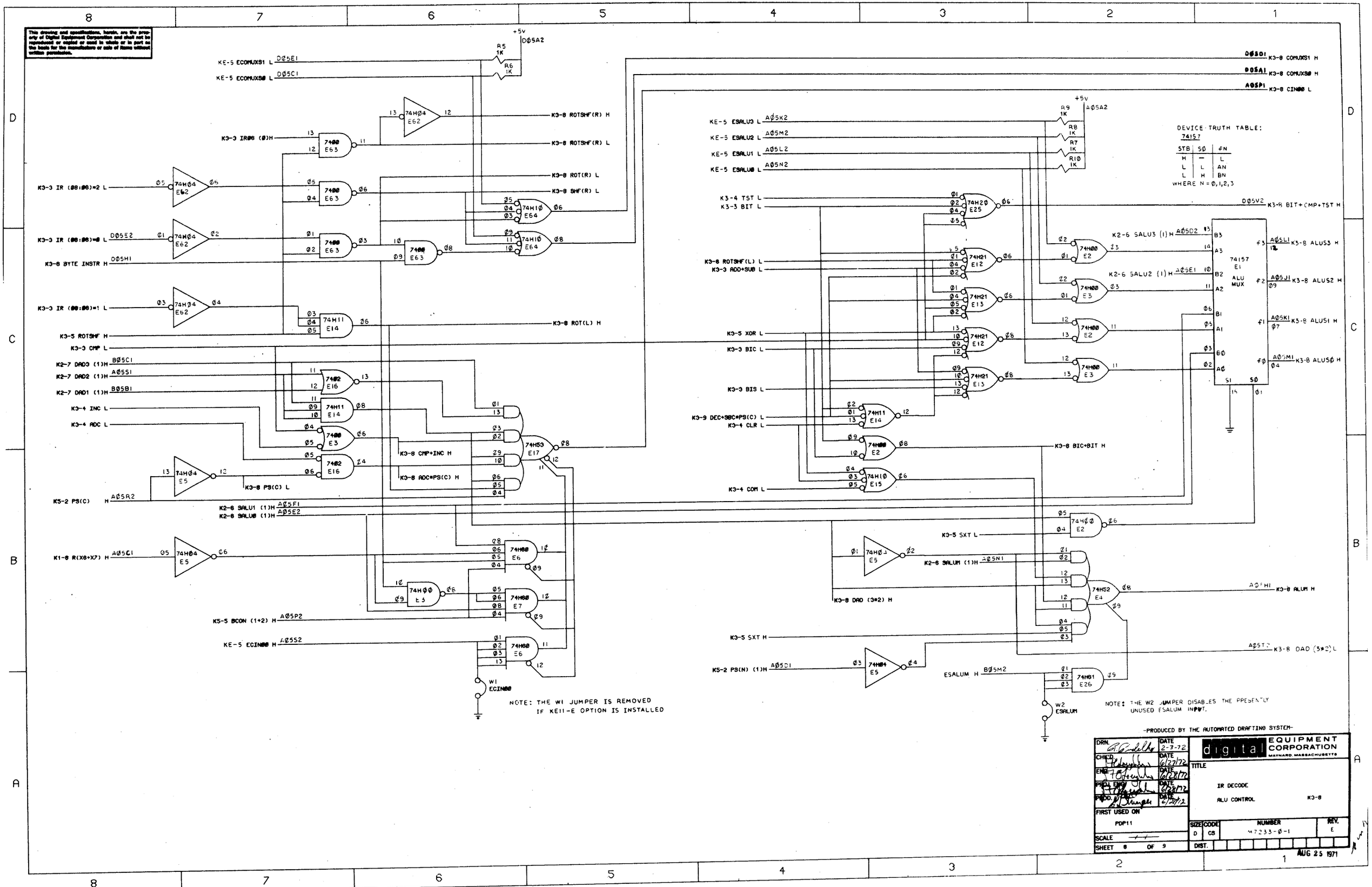

This drawing and specifications, herein, are the property of Digital Equipment Corporation and shall not be reproduced or copied or used in whole or in part as the basis for the manufacture or sale of items without written permission.

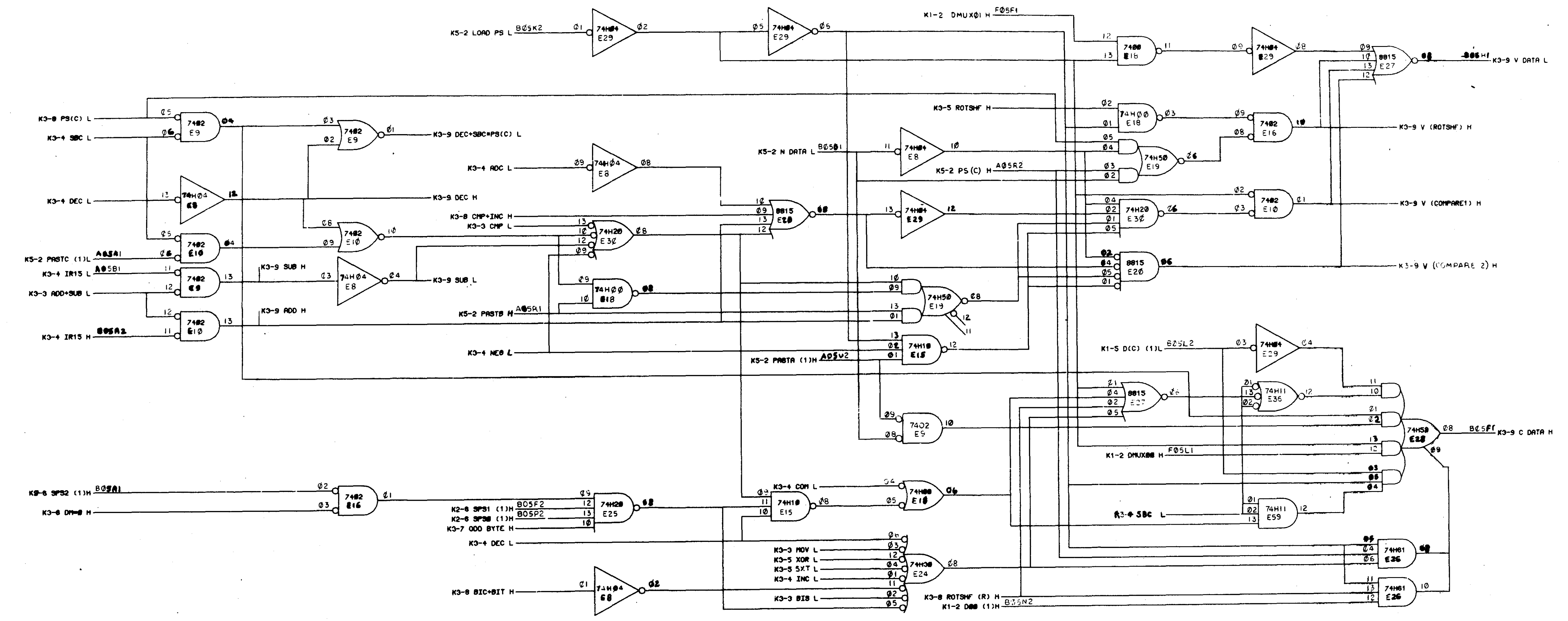

-PRODUCED BY THE AUTOMATED DRAFTING SYSTEM-

UNLESS OTHERWISE SPECIFIED DIMENSIONS IN INCHES TOLERANCES DECIMALS ±.005 FRACTIONS ±1/64 ANGLES ±0°30' FINAL SURFACE QUALITY √ REMOVE BURRS AND BREAK SHARP CORNERS	DRN	DATE 2-3-72	EQUIPMENT CORPORATION MAYNARD, MASSACHUSETTS
	CHKD	DATE 6/27/72	TITLE IR DECODE CODES C,V K3-9
MATERIAL	FIRST USED ON PDP11		
FINISH	SCALE		SIZE D CS NUMBER M7233-Ø-1 REV. E
	SHEET 9 OF 9		DIST.

1 AUG 25 1971

This drawing and specifications, herein, are the property of Digital Equipment Corporation and shall not be reproduced or copied or used in whole or in part as the basis for the manufacture or sale of items without written permission.

NOTES:

1. PIN NOTATION THROUGHOUT IS ORDER UPON MODULE PLACEMENT IN THE KD11-A PROCESSOR. MODULE REFERENCE ALONE IS OBTAINED BY DELETING THE NUMBER (SLOT LOCATION) AFTER THE FIRST LETTER.
2. ALL SIGNALS THAT HAVE MODULE PINS ARE SO NOTED. OUTPUT SIGNALS WITH MODULE PINS ARE BROUGHT TO THE RIGHT SIDE OF THE PRINT.
3. PROCESSOR SIGNAL PREFIX NOTATION (K2-1 FOR EXAMPLE) IDENTIFIES THE SIGNAL SOURCE (PRINT AND MODULE). THE FIRST NUMBER AFTER THE K INDICATES THE MODULE PRINT SET, WHILE THE SECOND INDICATES THE SHEET WITHIN THE SET. SIGNALS WITH A "BUS" PREFIX REPRESENTS A "WIRED OR" SITUATION, AND MULTIPLE SOURCES FOR THE SIGNAL CAN EXIST.
4. UNLESS OTHERWISE NOTED: RESISTANCE IS IN OHMS; CAPACITANCE IS IN PICOFARRADS.
5. C113 AND C114 INSERTED WHEN KT11-D OPTION IS INSTALLED.

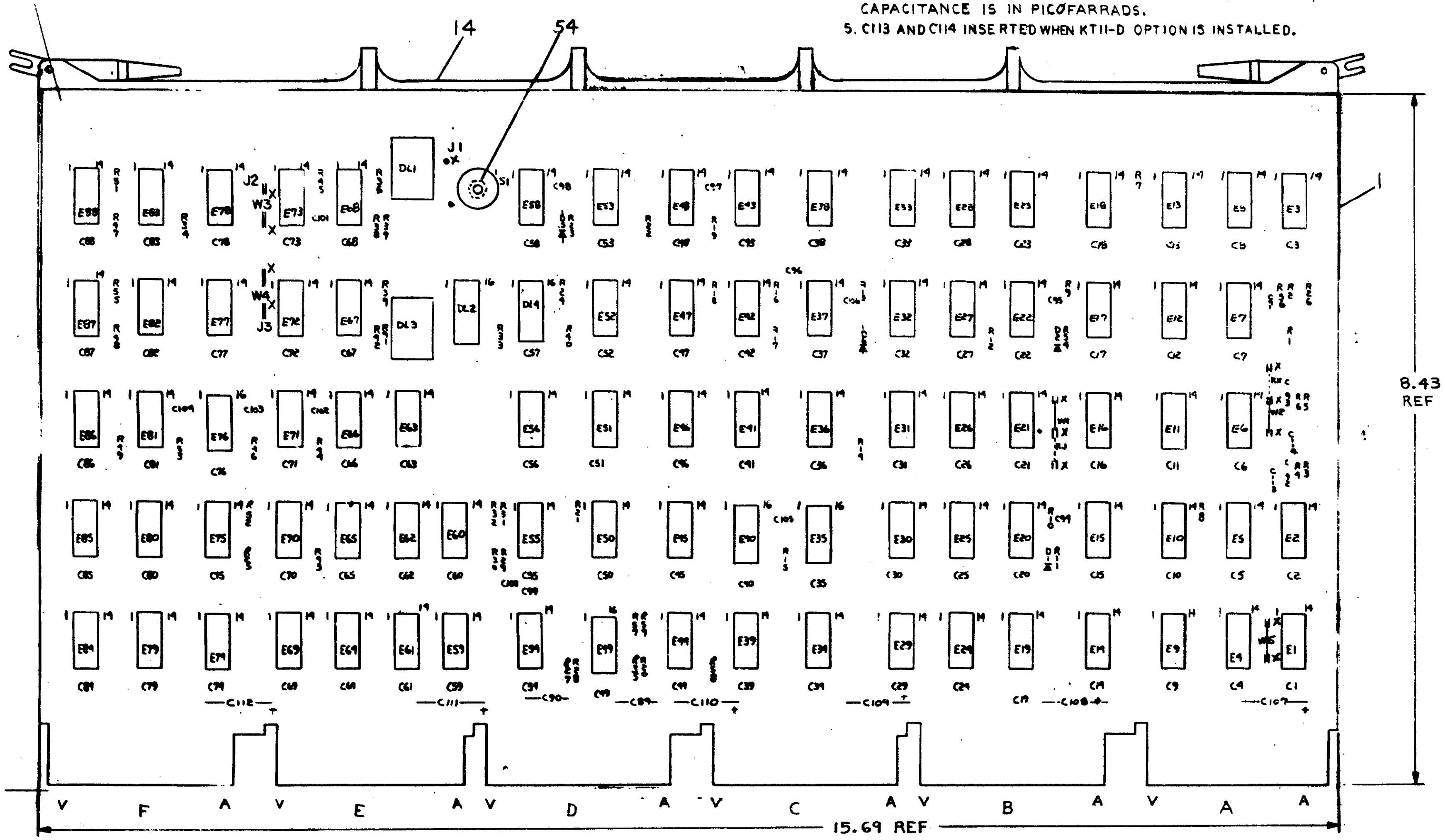

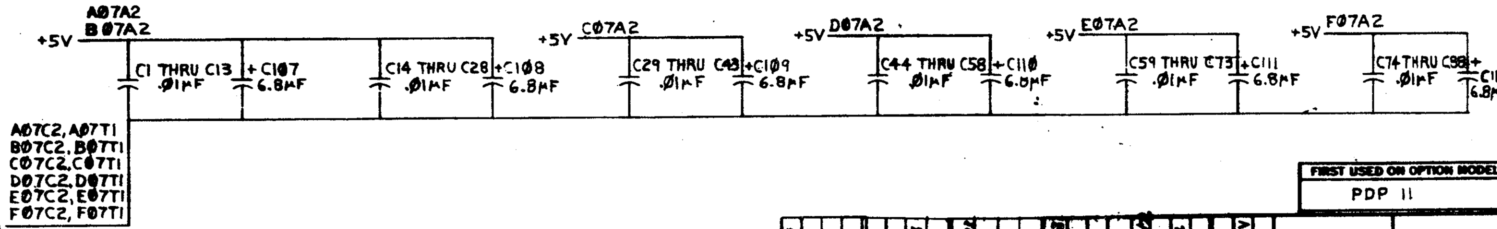

PARTS LIST

QTY	REF DESIGNATION	DESCRIPTION	PART NO.	ITEM NO.
5	W1, W2, W3, W4, W5	INSULATED JUMPER	9009185	55
1	USED AS A SPACER	HEX NYLON NUT, #4-40	9007992	54
12		SPLIT LUGS	9006735	53
12		EYELET	9006732	52
1	E40	I.C. DEC 74175	1910651	51
3	E35, E49, E76	I.C. DEC 74123	1910436	50
4	E26, E30, E56, E19	I.C. DEC 8815	1909713	48
6	E2, E8, E42, E44, E55, E70	I.C. DEC 8881	1909705	47
7	E7, E15, E29, E32, E53, E75, E58	I.C. DEC 7404	1909686	46
5	E10, E27, E78, E83, E12	I.C. DEC 74H74	1909667	45
4	E1, E3, E37, E39	I.C. DEC 8640	1911469	44
7	E14, E33, E46, E47, E60, E71, E5	I.C. DEC 74H11	1909267	43
1	E88	I.C. DEC 74H55	1909063	42
3	E77, E82, E6	I.C. DEC 74H53	1909062	41
4	E16, E23, E65, E31	I.C. DEC 74H50	1909060	40
2	E34, E51	I.C. DEC 74H21	1909058	39
4	E17, E4, E41, E69	I.C. DEC 74H10	1909057	38
6	E21, E63, E64, E66, E72, E73	I.C. DEC 74H00	1909056	37
3	E22, E43, E86	I.C. DEC 7402	1909004	36
5	E62, E87, E9, E80, E48	I.C. DEC 74H20	1905635	35
5	E59, E67, E68, E61, E25	I.C. DEC 74H40	1905596	34
				33
				32
				31
				30
10	E18, E20, E28, E36, E45, E52, E74, E79, E84, E85	I.C. DEC 7400	1905575	29
7	E11, E13, E38, E50, E54, E81, E24	I.C. DEC 7474	1905547	28
2	DL2, DL4	DELAY LINE 100NS	1610033	27
1	DL3	DELAY LINE 50NS	1609428	26
1	DL1	DELAY LINE 30NS	1609427	25
2	R20, R28	RES 39K 1/4W ±5%	1302514	24
3	R15, R46, R53	RES 5.6K 1/4W ±5%	1301874	23
23	R1, R2, R3, R5, R7, R8, R12, R18, R21, R22, R25, R26, R27, R31, R32, R34, R43, R47, R48, R49, R51, R52, R55	RES 1K 1/4W ±5%	1300365	22
4	R35, R57, R58, R59	RES 180 1/4W ±5%	1301322	21
5	R9, R10, R14, R17, R24	RES 470 1/4W ±5%	1300316	20
2	R39, R37	RES 330 1/4W ±5%	1300295	19
6	R11, R13, R23, R33, R40, R54	RES 220 1/4W ±5%	1300271	18
2	R38, R41	RES 150 1/4W ±5%	1300250	17
3	R36, R42, R45	RES 100 1/4W ±5%	1300229	16
8	R4, R6, RT6, R19, R29, R30, R44, R56	RES 47 1/4W ±5%	1300202	15
1		HANDLE, MODULE	1210711-02	14
1	S1	SWITCH, 10 POS	1210042-01	13
4	D1, D2, D5, D6	DIODE D664	1100114	12
6	C107 THRU C112	CAP 6.8MF 35V ±10% TANT	1005306	11
3	C89, C90, C91	CAP 1200PF 100V ±5% D.M.	1002619	10
2	C104, C105	CAP 27PF 100V ±5% D.M.	1001739	9
88	C1 THRU C88	CAP .01MF 100V ±20% DISC	1001610	8
3	C97, C101, C103	CAP 1000PF 100V ±5% D.M.	1000042	7
				6
3	C92, C99, C100	CAP 470PF 100V ±5% D.M.	1000024	5
5	C94, C96, C98, C102, C106	CAP 330PF 100V ±5% D.M.	1000023	4
2	C93, C95	CAP 220PF 100V ±5 D.M.	1000021	3
				2
1		ETCH CIRCUIT BOARD	5009983	1

ETCH BOARD REV: D

IC PIN LOCATIONS

IC TYPE	GND	+5V
DEC 74175	8	16
DEC 74123	8	16
DEC 8640	1	8

- GND AND 5V ARE USUALLY PIN 7 AND 14 RESPECTIVELY. EXCEPTIONS ARE STATED ABOVE

SEMICONDUCTOR CONVERSION CHART

DEC NO.	EIA NO.
D664	1N3606

FIRST USED ON OPTION MODEL: PDP 11

REVISIONS: F M7234-00005 J. ROGERS 10-11-74; E M7234-00004 S. BUZYNSKI 7/11/73; D M7234-00003 J. O'LOUGHLIN; C M7234-0002 J. O'LOUGHLIN; B M7234-00001 J. O'LOUGHLIN

NEXT HIGHER ASSY: KD11-A

DRN 6-23-72; CHK'D 7/19/72

digital EQUIPMENT CORPORATION MAYNARD, MASSACHUSETTS

TITLE: TIMING

K4-1

SIZE D CODE CS NUMBER M7234-Ø-1 REV F

SCALE —; SHEET 1 OF 6

This drawing and specifications, herein, are the property of Digital Equipment Corporation and shall not be reproduced or copied or used in whole or in part as this basis for the manufacture or sale of items without written permission.

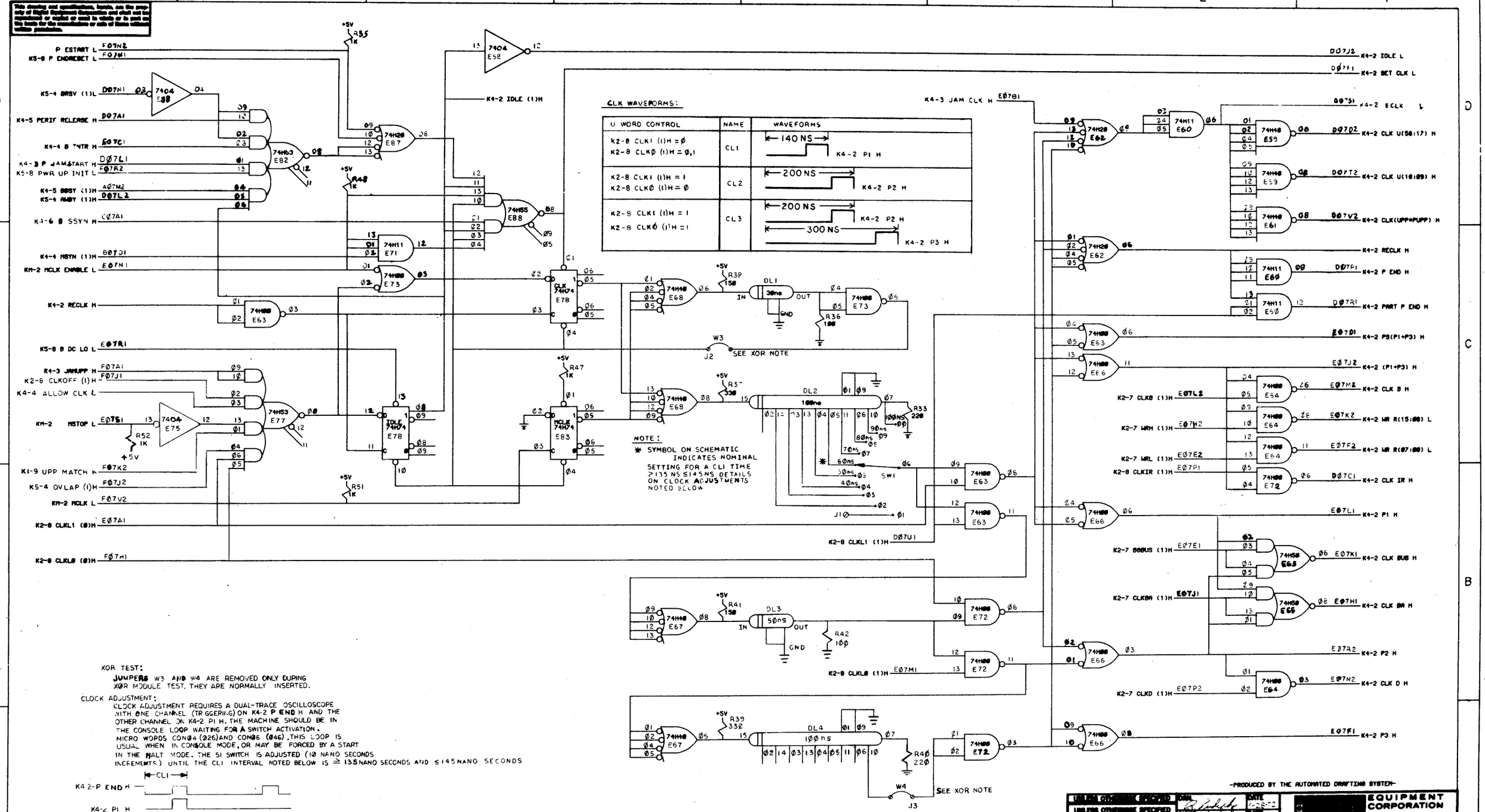

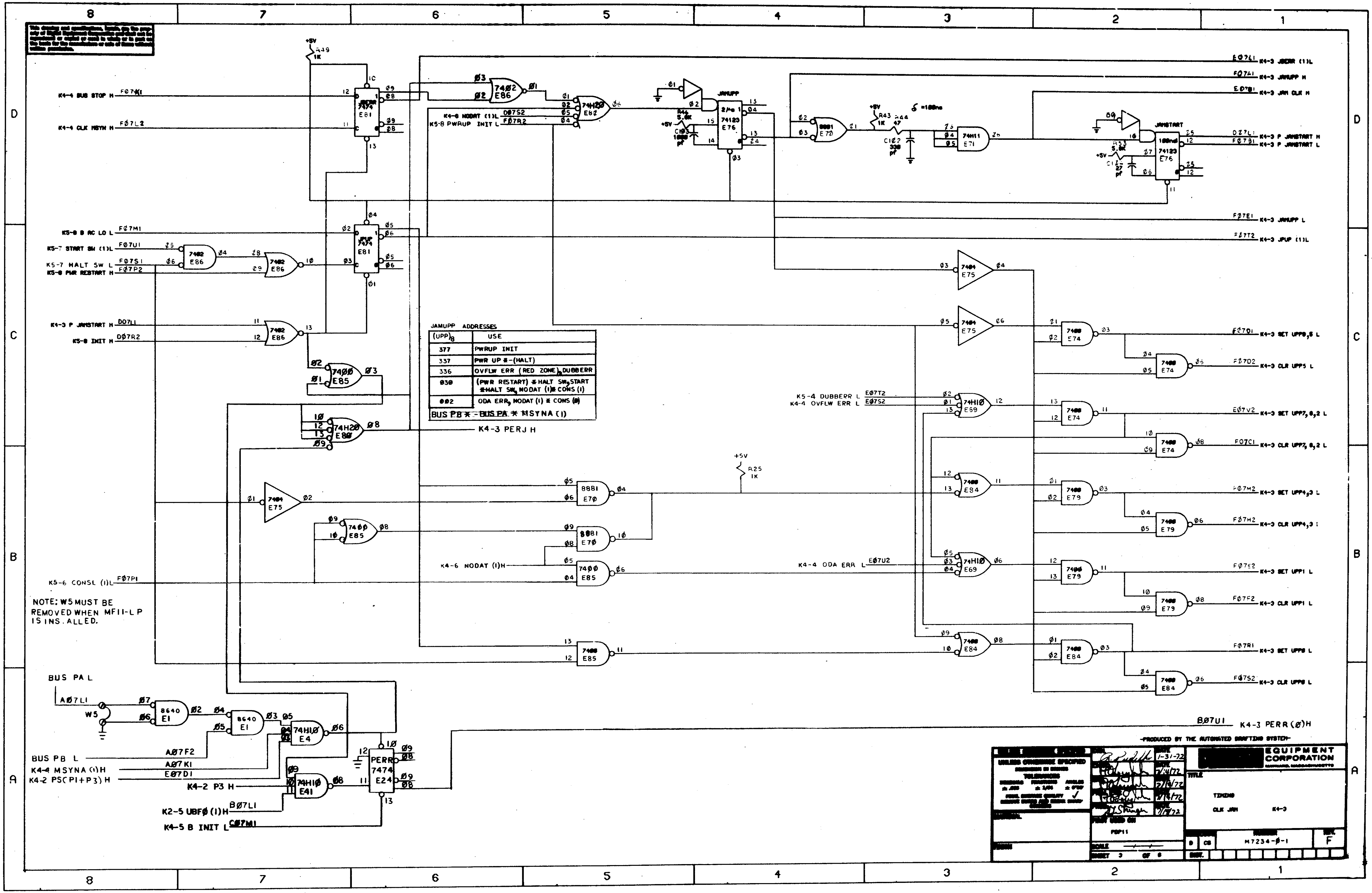

K4-4 BUS STOP H
K4-4 CLK MSYN H
K5-8 B AC LO L
K5-7 START SW (1)L
K5-7 HALT SW L
K5-8 PWR RESTART H
K4-3 P JAMSTART H
K5-8 INIT H
K4-6 NODAT (1)L
K5-8 PWRUP INIT L
JAMUPP
JAMSTART
K4-3 JBERR (1)L
K4-3 JAMUPP H
K4-3 JAM CLK H
K4-3 P JAMSTART H
K4-3 P JAMSTART L
K4-3 JAMUPP L
K4-3 JPUP (1)L
K4-3 SET UPP8,5 L
K4-3 CLR UPP5 L
K4-3 SET UPP7,6,2 L
K4-3 CLR UPP7,6,2 L
K4-3 SET UPP4,3 L
K4-3 CLR UPP4,3 L
K4-3 SET UPP1 L
K4-3 CLR UPP1 L
K4-3 SET UPP0 L
K4-3 CLR UPP0 L
K5-4 DUBBERR L
K4-4 OVFLW ERR L
K4-4 ODA ERR L
K4-3 PERJ H
K4-6 NODAT (1)H
K5-6 CONSL (1)L
JAMUPP ADDRESSES
(UPP)8 | USE
377 | PWRUP INIT
337 | PWR UP * -(HALT)
336 | OVFLW ERR (RED ZONE), DUBBERR
030 | (PWR RESTART) * HALT SW, START * HALT SW, NODAT (1) * CONS (1)
002 | ODA ERR, NODAT (1) * CONS (0)
BUS PB * - BUS PA * MSYNA (1)
NOTE: W5 MUST BE REMOVED WHEN MF11-LP IS INSTALLED.
BUS PA L
W5
BUS PB L
K4-4 MSYNA (1)H
K4-2 PS(P1+P3) H
K4-2 P3 H
K2-5 UBFØ (1)H
K4-5 B INIT L
K4-3 PERR(Ø)H
-PRODUCED BY THE AUTOMATED DRAFTING SYSTEM-
EQUIPMENT CORPORATION
TITLE
TIMING
CLK JAM
K4-3
PDP11
M7234-Ø-1
F

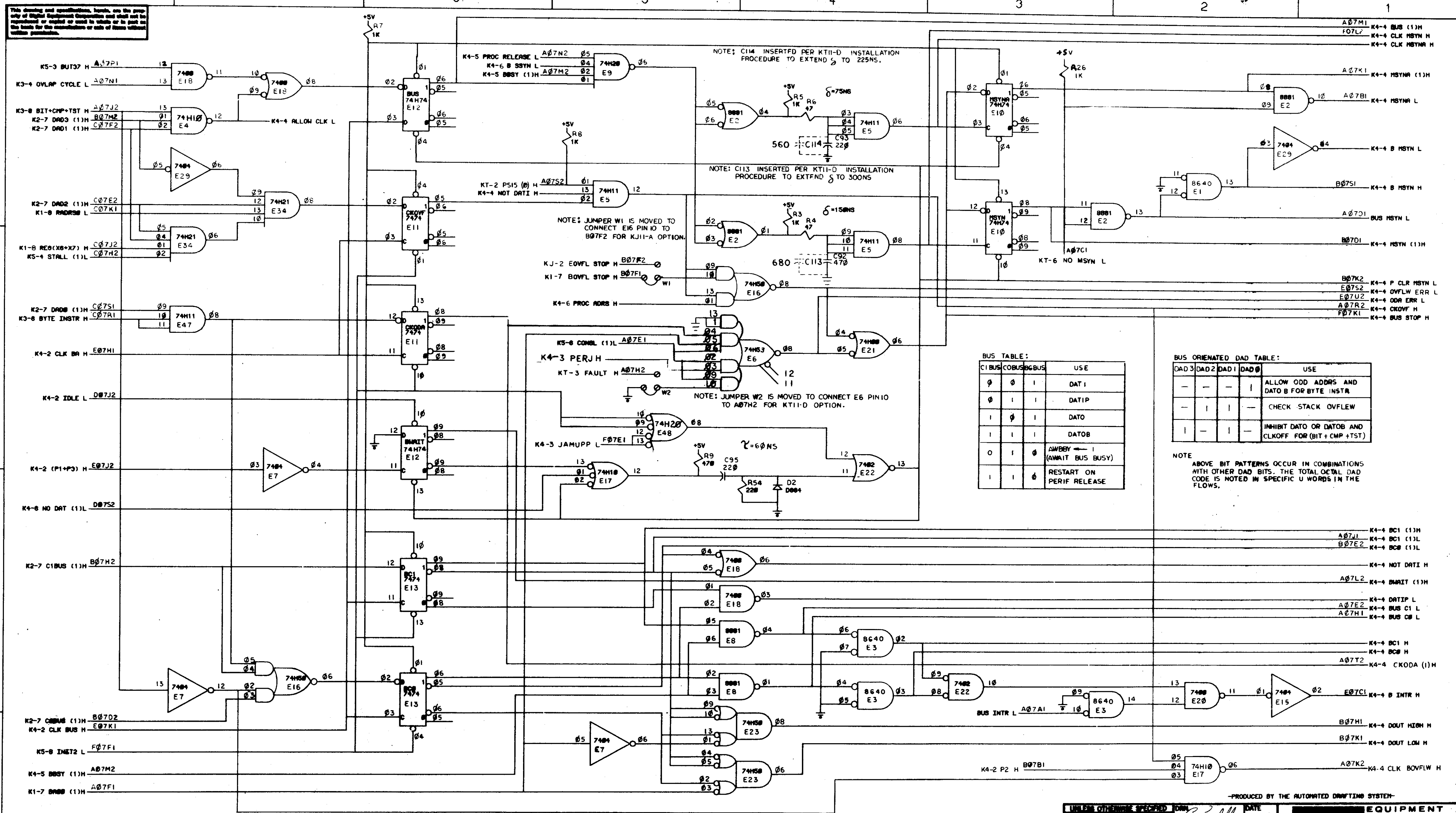

BUS TABLE:

C1 BUS	C0 BUS	BG BUS	USE
ø	ø	1	DATI
ø	1	1	DATIP
1	ø	1	DATO
1	1	1	DATOB
0	1	ø	AWBBY ← 1 (AWAIT BUS BUSY)
1	1	ø	RESTART ON PERIF RELEASE

BUS ORIENATED DAD TABLE:

DAD 3	DAD 2	DAD 1	DAD ø	USE
—	—	—	1	ALLOW ODD ADDRS AND DATO B FOR BYTE INSTR
—	1	1	—	CHECK STACK OVFLEW
1	—	1	—	INHIBIT DATO OR DATOB AND CLKOFF FOR (BIT + CMP +TST)

NOTE
ABOVE BIT PATTERNS OCCUR IN COMBINATIONS WITH OTHER DAD BITS. THE TOTAL OCTAL DAD CODE IS NOTED IN SPECIFIC U WORDS IN THE FLOWS.

-PRODUCED BY THE AUTOMATED DRAFTING SYSTEM-

UNLESS OTHERWISE SPECIFIED
DIMENSION IN INCHES
TOLERANCES
DECIMALS ±.005 FRACTIONS ±1/64 ANGLES ±0°30'
FINAL SURFACE QUALITY ✓
REMOVE BURRS AND BREAK SHARP CORNERS
MATERIAL
FINISH

DRN DATE 1-31-72
CHKD DATE 7-14-72
ENG DATE 7-14-72
PROJ ENG DATE 7-14-72
PROD DATE 7/14/72
FIRST USED ON PDP11
SCALE
SHEET 4 OF 6

[redacted] EQUIPMENT CORPORATION
MAYNARD, MASSACHUSETTS

TITLE
TIMING
BUS DATA CNTL K4-4

SIZE	CODE	NUMBER	REV.
D	CS	M7234-ø-1	F

DIST.

This drawing and specifications, herein, are the property of Digital Equipment Corporation and shall not be reproduced or copied or used in whole or in part as the basis for the manufacture or sale of items without written permission.

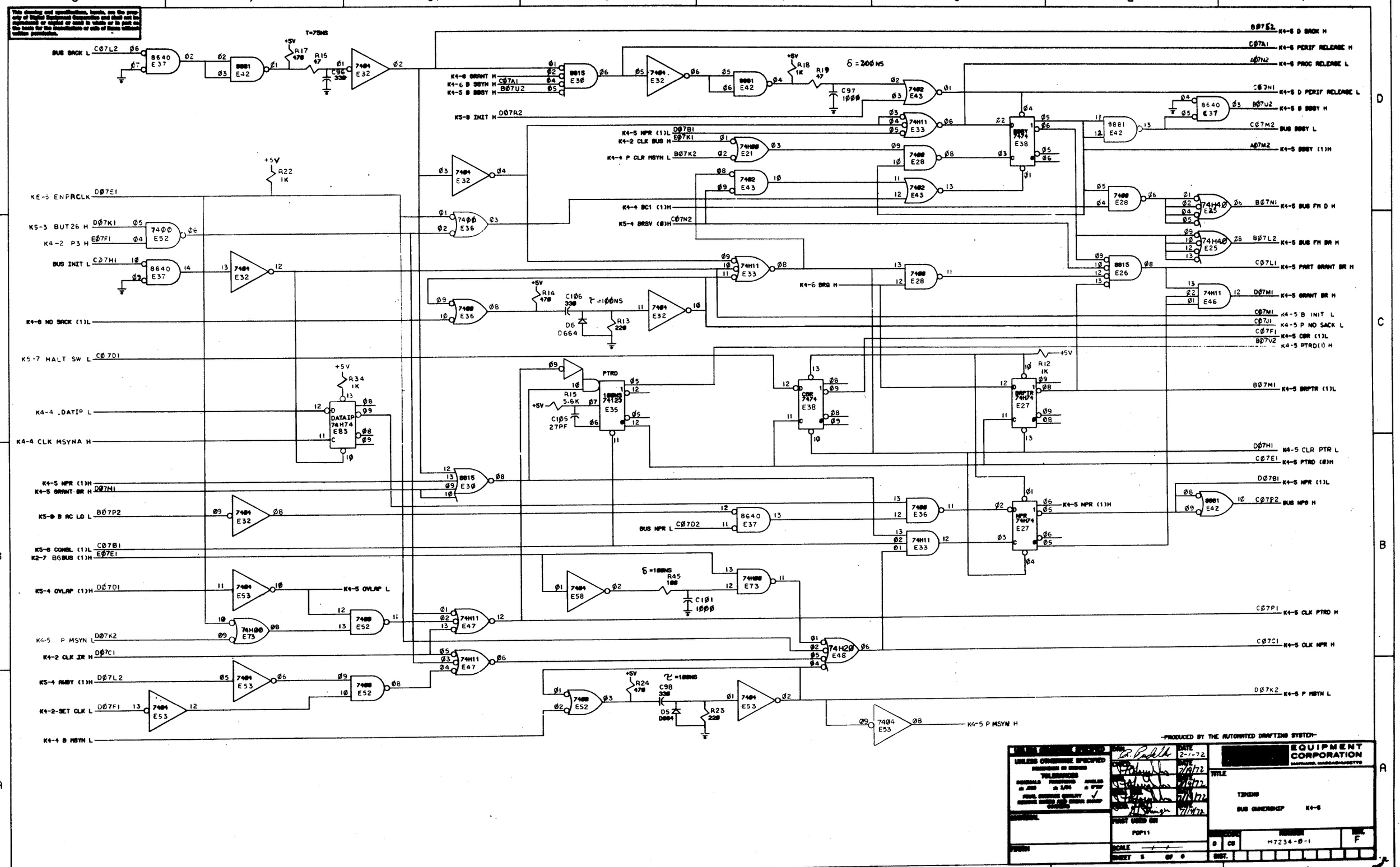

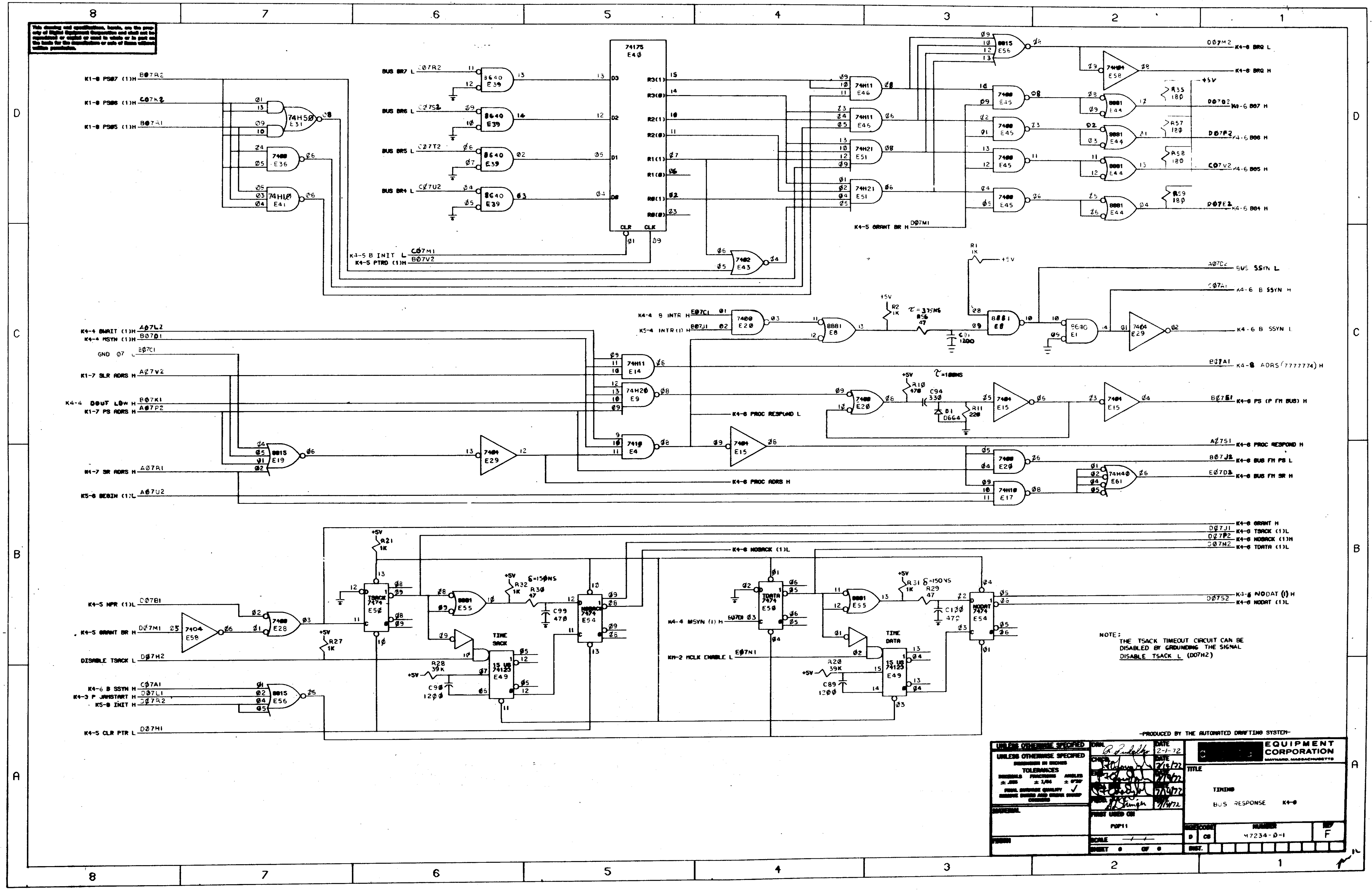

K1-8 PS07 (1)H
K1-8 PS06 (1)H
K1-8 PS05 (1)H
BUS BR7 L
BUS BR6 L
BUS BR5 L
BUS BR4 L
74175 E40
K4-5 B INIT L
K4-5 PTRD (1)H
K4-5 GRANT BR H
K4-6 BRQ L
K4-6 BRQ H
K4-6 B07 H
K4-6 B06 H
K4-6 B05 H
K4-6 B04 H
+5V
BUS SSYN L
K4-6 B SSYN H
K4-6 B SSYN L
K4-4 B INTR H
K5-4 INTR (1) H
τ=375NS
τ=100NS
K4-4 BWAIT (1)H
K4-4 MSYN (1)H
GND 07 L
K1-7 SLR ADRS H
K4-4 DOUT LOW H
K1-7 PS ADRS H
K4-7 SR ADRS H
K5-8 BEGIN (1)L
K4-8 ADRS (7777774) H
K4-6 PS (P FM BUS) H
K4-6 PROC RESPOND L
K4-6 PROC RESPOND H
K4-6 BUS FM PS L
K4-6 BUS FM SR H
K4-6 PROC ADRS H
K4-6 GRANT H
K4-6 TSACK (1)L
K4-6 NOSACK (1)H
K4-6 TDATA (1)L
K4-6 NOSACK (1)L
K4-5 NPR (1)L
K4-5 GRANT BR H
DISABLE TSACK L
K4-6 B SSYN H
K4-3 P JAMSTART H
K5-8 INIT H
K4-5 CLR PTR L
K4-4 MSYN (1) H
K4-2 MCLK ENABLE L
K4-6 NODAT (1) H
K4-6 NODAT (1)L
TIME SACK
TIME DATA
δ=150NS
NOTE:
THE TSACK TIMEOUT CIRCUIT CAN BE DISABLED BY GROUNDING THE SIGNAL DISABLE TSACK L (D07H2)
-PRODUCED BY THE AUTOMATED DRAFTING SYSTEM-
UNLESS OTHERWISE SPECIFIED
DIMENSIONS IN INCHES
TOLERANCES
DECIMALS ± .005 FRACTIONS ± 1/64 ANGLES ± 0°30'
DRN. DATE 2-1-72
EQUIPMENT CORPORATION
MAYNARD, MASSACHUSETTS
TITLE
TIMING
BUS RESPONSE K4-8
FIRST USED ON PDP11
NUMBER M7234-0-1
REV F
SHEET 8 OF 8

NOTES:

1. PIN NOTATION THROUGHOUT IS ORDERED UPON MODULE PLACEMENT IN THE KD11-A PROCESSOR. MODULE REFERENCE ALONE IS OBTAINED BY DELETING THE NUMBER (SLOT LOCATION) AFTER THE LETTER.
2. ALL SIGNALS THAT HAVE MODULE PINS ARE SO NOTED. OUTPUT SIGNALS WITH MODULE PINS ARE BROUGHT TO THE RIGHT SIDE OF THE PRINT.
3. PROCESSOR SIGNAL PREFIX NOTATION (K2-1, FOR EXAMPLE) IDENTIFIES THE SIGNAL SOURCE (PRINT AND MODULE). THE FIRST NUMBER AFTER THE K INDICATES THE MODULE PRINT SET, WHILE THE SECOND INDICATES THE SHEET WITHIN THE SET. SIGNALS WITH A "BUS" PREFIX REPRESENT A "WIRED OR" SITUATION, AND MULTIPLE SOURCES FOR THE SIGNAL CAN EXIST.
4. UNLESS OTHERWISE NOTED: RESISTANCE IS IN OHMS; CAPACITANCE IS IN PICOFARRADS.

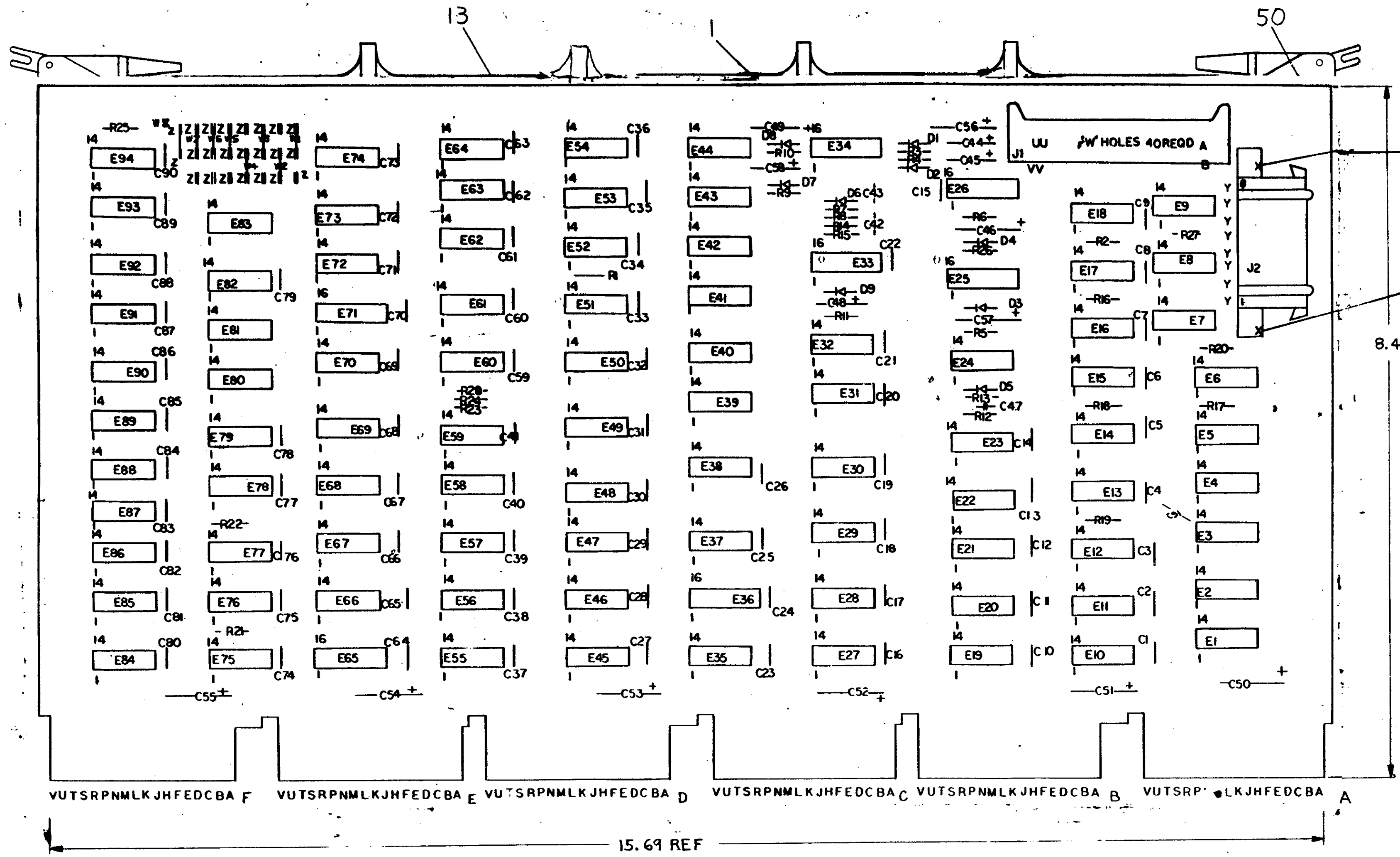

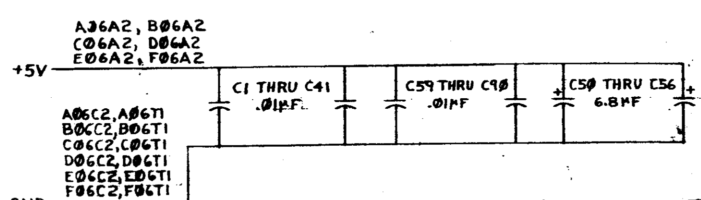

DEC 74157	8	16
DEC 74123	8	16
DEC 8251	8	16
DEC 8640	1	8
IC TYPE	GND	+ 5V

GND AND 5V ARE USUALLY PIN 7 AND 14 RESPECTIVELY EXCEPTIONS ARE STATED ABOVE

IC PIN LOCATIONS

PARTS LIST

QTY	REF DESIGNATION	DESCRIPTION	PART NO.	ITEM NO.
A/R		TFE THIN WALL EXTRUDED TUBING	9107256	55
1	C91	CAP. 270PF 100V ±5%	1000022	54
8		INSULATED JUMPER L-2007-1	9009185	53
2		HEX NUT NYLON	9007992	52
23		SPLIT LUG	9006735	51
12		EYELET	9006732	50
2		SHOULDER WASHER FIBER (BLK)	9006693	49
2		SCREW NYLON	9006401-4	48
1	E65	I.C. DEC 74157	1910655	47
4	E25, E26, E33, E34	I.C. DEC 74123	1910436	46
4	E24, E45, E60, E82	I.C. DEC 74H04	1909931	45
5	E13, E37, E58, E70, E81	I.C. DEC 8815	1909713	44
5	E16, E84, E85, E88, E89	I.C. DEC 8881	1909705	43
7	E1 THRU E4, E20, E29, E41	I.C. DEC 7404	1909686	42
1	E52	I.C. DEC 74H74	1909667	41
2	E36, E71	I.C. DEC 8251	1909594	40
1	E15	I.C. DEC 8640	1911469	39
4	E14, E40, E48, E72	I.C. DEC 74H11	1909267	38
1	E55	I.C. DEC 74H61	1909065	37
1	E66	I.C. DEC 74H60	1909064	36
1	E59	I.C. DEC 74H55	1909063	35
2	E91, E92	I.C. DEC 74H53	1909062	34
2	E63, E67	I.C. DEC 74H52	1909061	33
4	E47, E56, E69, E87	I.C. DEC 74H50	1909060	32
1	E62	I.C. DEC 74H21	1909058	31
4	E7, E68, E80, E83	I.C. DEC 74H10	1909057	30
2	E57, E90	I.C. DEC 74H00	1909056	29
7	E5, E27, E28, E35, E39, E49, E54	I.C. DEC 7402	1909004	28
1	E46	I.C. DEC 74H20	1905635	27
3	E17, E18, E86	I.C. DEC 74H40	1905586	26
2	E31, E64	I.C. DEC 7450	1905580	25
				24
2	E9, E94	I.C. DEC 7430	1905578	23
4	E8, E19, E43, E93	I.C. DEC 7420	1905577	22
3	E38, E51, E53	I.C. DEC 7410	1905576	21
7	E11, E21, E22, E23, E30, E73, E74	I.C. DEC 7400	1905575	20
13	E6, E10, E12, E32, E42, E44, E50, E61, E75 THRU E79	I.C. DEC 7474	1905547	19
4	R3, R4, R5, R6	RES 18K 1/4W ±5%	1302465	18
4	R9, R10, R11, R15	RES 12K 1/4W ±5%	1300488	17
16	R1, R2, R14, R16 THRU R28	RES 1K 1/4W ±5%	1300365	16
2	R8, R12	RES 470Ω 1/4W ±5%	1300316	15
2	R7, R13	RES 220Ω 1/4W ±5%	1300271	14
1		HANDLE MODULE	1210711-02	13
8		PINS SOCKET AMP	1209456	12
1	J1	CONN RIGHT ANGLE HEADER	1209441	11
1	J2	CONN PIN HOUSING	1209340	10
9	D1 THRU D9	DIODE D664	1100114	9
7	C50 THRU C56	CAP 6.8MF 35V ±10% TANT	1005306	8
2	C46, C57	CAP 15MF 20V ±10% TANT	1004812	7
1	C48	CAP 2.2MF 20V ±10% TANT	1002627	6
1	C58	CAP 1MF 35V ±10% TANT	1001776	5
73	C1 THRU C41, C59 THRU C90	CAP .01MF 100V ±20% DISC	1001610	4
3	C44, C45, C49	CAP 3.9MF 10V ±10% TANT	1000064	3
3	C42, C43, C47	CAP 680PF 100V ±5% D.M.	1000026	2
1		ETCH CIRCUIT BOARD	5009984	1

FIRST USED ON OPTION MODEL: PDP 11

ETCH BOARD REV: E

SEMICONDUCTOR CONVERSION CHART

DEC NO.	EIA NO.
D664	1N3606

REVISIONS: M7235-00001 ORIGINATED; M7235-00002 C; M7235-00003 D; M7235-00004 E; M7235-00005 F; M7235-00006 H

DRN 7-25-72; CHKD 7/26/72; ENG 7/31/72; PROD 8-1-72

NEXT HIGHER ASSY: KD11-A

DIGITAL EQUIPMENT CORPORATION, MAYNARD, MASSACHUSETTS

TITLE: STATUS

K5-1

SIZE D CODE CS NUMBER M7235-0-1 REV. H

SCALE NONE SHEET 1 OF 8

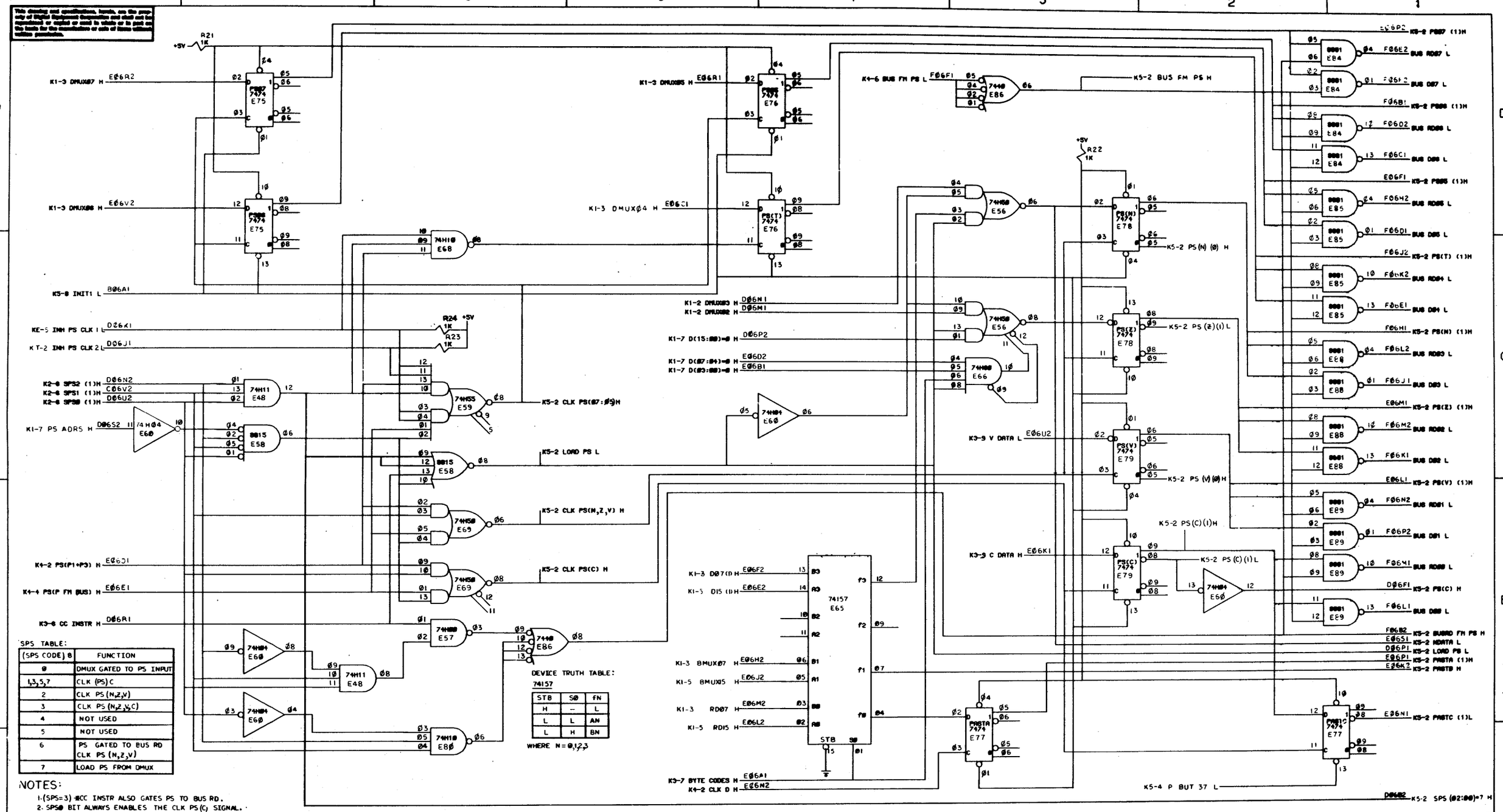

SPS TABLE:

(SPS CODE) 8	FUNCTION
0	DMUX GATED TO PS INPUT
1,3,5,7	CLK (PS) C
2	CLK PS (N,Z,V)
3	CLK PS (N,Z,V,C)
4	NOT USED
5	NOT USED
6	PS GATED TO BUS RD CLK PS (N,Z,V)
7	LOAD PS FROM DMUX

NOTES:

1. (SPS=3) #CC INSTR ALSO GATES PS TO BUS RD.
2. SPS0 BIT ALWAYS ENABLES THE CLK PS(C) SIGNAL.
3. SPS1 BIT ALWAYS ENABLES THE CLK PS(N,Z,V) SIGNAL.

This drawing and specifications, herein, are the property of Digital Equipment Corporation and shall not be reproduced or copied or used in whole or in part as the basis for the manufacture or sale of items without written permission.

BUT TABLE (NUMERICAL & MNEMONIC CORRESPONDANCE):

BUT00	NO OP	BUT10	BUT (HALT)	BUT20	BUT (BYTE+SERVICE+FETCH)	BUT30	BUT (VARIOUS SWITCHES)
BUT01	BUT (CBR1)	BUT11	BUT (MM FAULT)	BUT21	BUT (IR03, BYTE+SOURCE)	BUT31	BUT (NOWR+BYTEWR+WORDWR)
BUT02	BUT (CBR2)	BUT12	BUT (D=0)	BUT22	BUT (BYTE+SOURCE)	BUT32	NOT USED
BUT03	BUT (REG DEP)	BUT13	NOT USED	BUT23	NOT USED	BUT33	BUT (OB+INSTR4)
BUT04	BUT (REG EXAM)	BUT14	NOT USED	BUT24	BUT (CBR+HALT)	BUT34	BUT (INSTR4)
BUT05	BUT (BEGIN)	BUT15	BUT (JSR+JMP)	BUT25	BUT (BR, WAIT+FETCH)	BUT35	BUT (OB+INSTR3)
BUT06	BUT (SWITCH)	BUT16	BUT (SERVICE C+FETCH C)	BUT26	BUT (REQUESTS)	BUT36	BUT (INSTR3)
BUT07	BUT (INTR)	BUT17	BUT (IR03)	BUT27	BUT (SERVICE B+FETCH OVLAP+FETCH B)	BUT37	BUT (INSTR1)

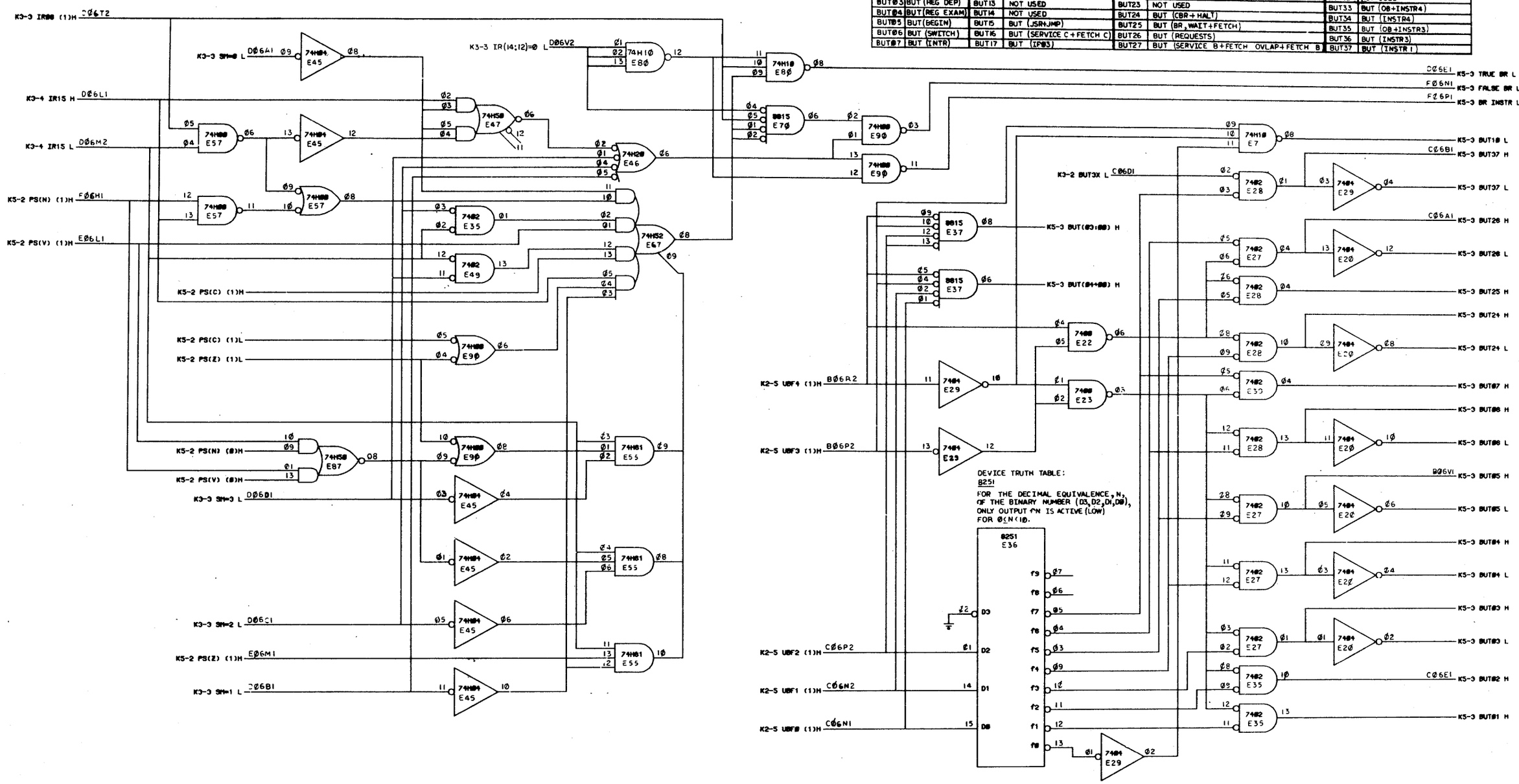

-PRODUCED BY THE AUTOMATED DRAFTING SYSTEM-

UNLESS OTHERWISE SPECIFIED
DIMENSION IN INCHES
TOLERANCES
DECIMALS ± .005 FRACTIONS ± 1/64 ANGLES ± 0°30'
FINAL SURFACE QUALITY
REMOVE BURRS AND BREAK SHARP CORNERS

MATERIAL

FINISH

DRN. DATE 2-4-72
CHKD. DATE 3/31/72
ENG. DATE 3/31/72
PROJ. ENG. DATE 3/31/72
PROD. DATE 4-1-72

FIRST USED ON
PDP11

SCALE
SHEET 3 OF 8

DIGITAL EQUIPMENT CORPORATION
MAYNARD, MASSACHUSETTS

TITLE
STATUS
BUT & BRANCH K5-3

SIZE D CODE CS NUMBER M7235-0-1 REV. H
DIST.

AUG 27 1971

This drawing and specifications, herein, are the property of Digital Equipment Corporation and shall not be reproduced or copied or used in whole or in part as the basis for the manufacture or sale of items without written permission.

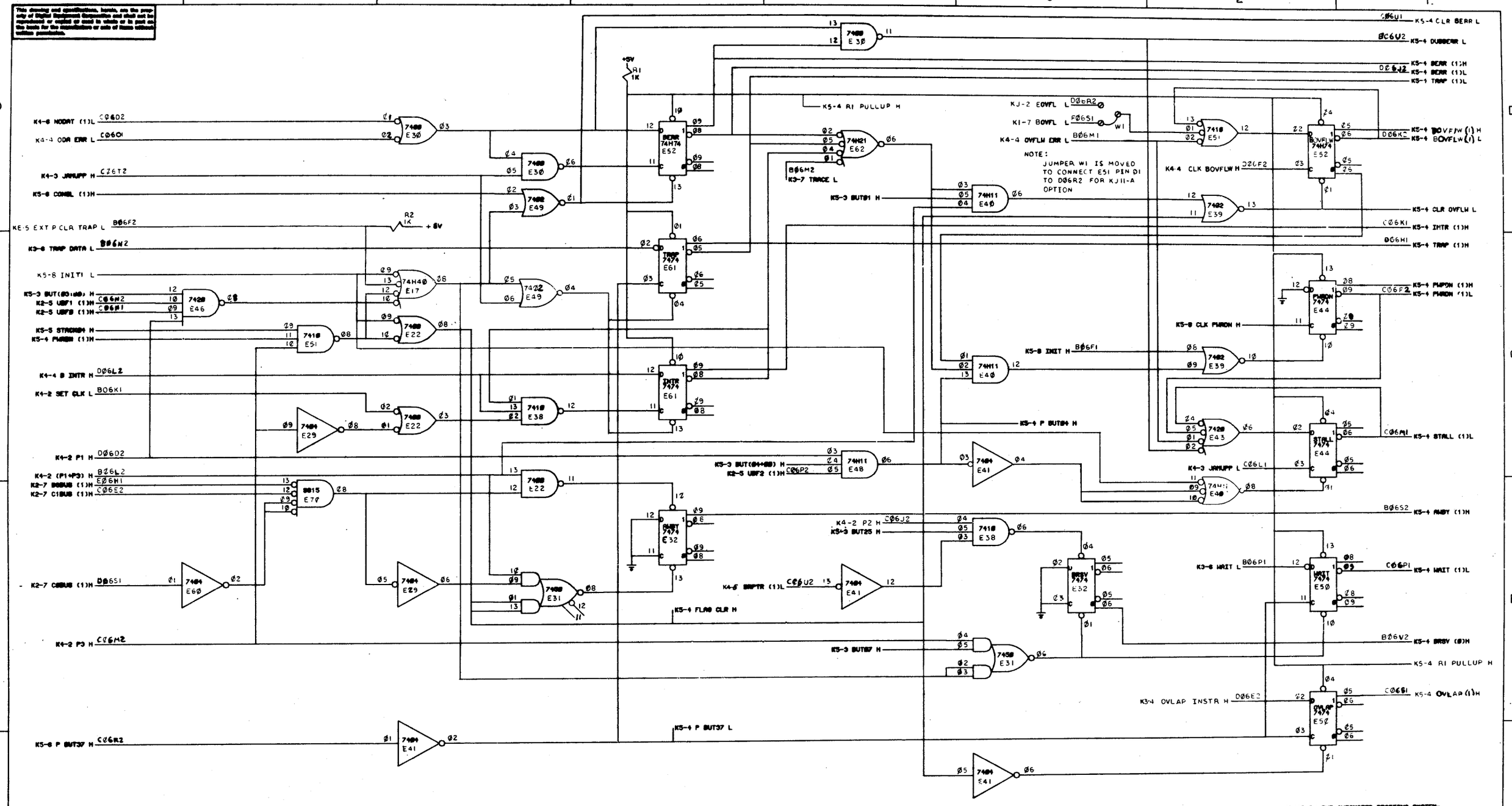

This drawing and specifications, herein, are the property of Digital Equipment Corporation and shall not be reproduced or copied or used in whole or in part as the basis for the manufacture or sale of items without written permission.

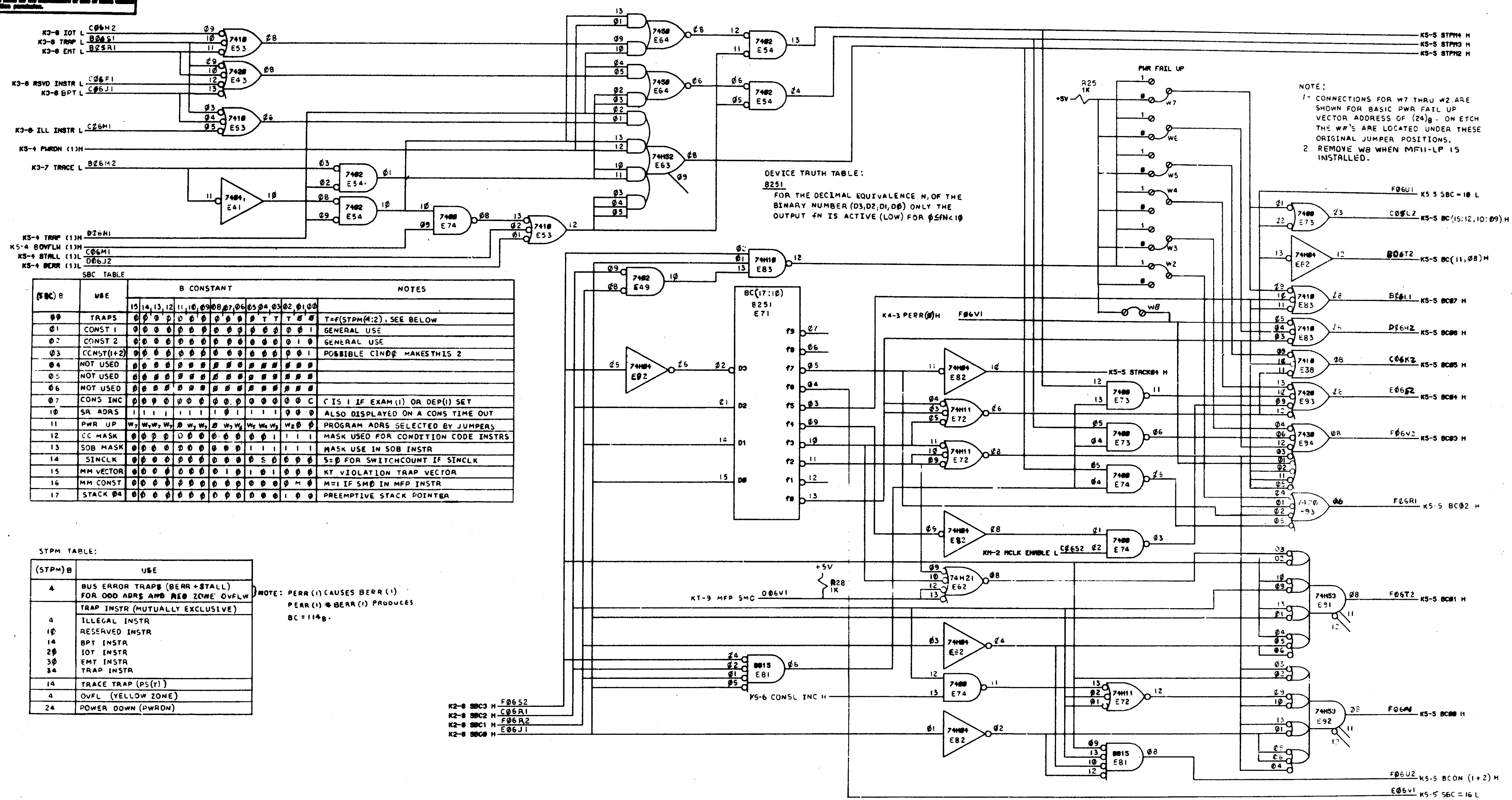

NOTE:

1- CONNECTIONS FOR W7 THRU W2 ARE SHOWN FOR BASIC PWR FAIL UP VECTOR ADDRESS OF $(24)_8$. ON ETCH THE W#'S ARE LOCATED UNDER THESE ORIGINAL JUMPER POSITIONS.

2 REMOVE W8 WHEN MF11-LP IS INSTALLED.

DEVICE TRUTH TABLE:

8251

FOR THE DECIMAL EQUIVALENCE N, OF THE BINARY NUMBER (D3,D2,D1,DØ) ONLY THE OUTPUT fN IS ACTIVE (LOW) FOR Ø≤fN<1Ø

SBC TABLE

(SBC) 8	USE	B CONSTANT 15	14	13	12	11	10	Ø9	Ø8	Ø7	Ø6	Ø5	Ø4	Ø3	Ø2	Ø1	ØØ	NOTES
ØØ	TRAPS	Ø	Ø	Ø	Ø	Ø	Ø	Ø	Ø	Ø	Ø	Ø	T	T	T	Ø	Ø	T=f(STPM(4:2), SEE BELOW
Ø1	CONST 1	Ø	Ø	Ø	Ø	Ø	Ø	Ø	Ø	Ø	Ø	Ø	Ø	Ø	Ø	Ø	1	GENERAL USE
Ø2	CONST 2	Ø	Ø	Ø	Ø	Ø	Ø	Ø	Ø	Ø	Ø	Ø	Ø	Ø	Ø	1	Ø	GENERAL USE
Ø3	CONST(1+2)	Ø	Ø	Ø	Ø	Ø	Ø	Ø	Ø	Ø	Ø	Ø	Ø	Ø	Ø	Ø	1	POSSIBLE CINØØ MAKES THIS 2
Ø4	NOT USED	Ø	Ø	Ø	Ø	Ø	Ø	Ø	Ø	Ø	Ø	Ø	Ø	Ø	Ø	Ø	Ø	
Ø5	NOT USED	Ø	Ø	Ø	Ø	Ø	Ø	Ø	Ø	Ø	Ø	Ø	Ø	Ø	Ø	Ø	Ø	
Ø6	NOT USED	Ø	Ø	Ø	Ø	Ø	Ø	Ø	Ø	Ø	Ø	Ø	Ø	Ø	Ø	Ø	Ø	
Ø7	CONS INC	Ø	Ø	Ø	Ø	Ø	Ø	Ø	Ø	Ø	Ø	Ø	Ø	Ø	Ø	Ø	C	C IS 1 IF EXAM(1) OR DEP(1) SET
1Ø	SR ADRS	1	1	1	1	1	1	1	1	Ø	1	1	1	1	Ø	Ø	Ø	ALSO DISPLAYED ON A CONS TIME OUT
11	PWR UP	W7	W7	W7	W7	Ø	W7	W7	Ø	W7	W6	W5	W4	W3	W2	Ø	Ø	PROGRAM ADRS SELECTED BY JUMPERS
12	CC MASK	Ø	Ø	Ø	Ø	Ø	Ø	Ø	Ø	Ø	Ø	Ø	Ø	1	1	1	1	MASK USED FOR CONDITION CODE INSTRS
13	SOB MASK	Ø	Ø	Ø	Ø	Ø	Ø	Ø	Ø	Ø	Ø	1	1	1	1	1	1	MASK USE IN SOB INSTR
14	SINCLK	Ø	Ø	Ø	Ø	Ø	Ø	Ø	Ø	Ø	Ø	Ø	S	Ø	Ø	Ø	Ø	S=Ø FOR SWITCHCOUNT IF SINCLK
15	MM VECTOR	Ø	Ø	Ø	Ø	Ø	Ø	Ø	Ø	1	Ø	1	Ø	1	Ø	Ø	Ø	KT VIOLATION TRAP VECTOR
16	MM CONST	Ø	Ø	Ø	Ø	Ø	Ø	Ø	Ø	Ø	Ø	Ø	Ø	Ø	Ø	M	Ø	M=1 IF SMØ IN MFP INSTR
17	STACK Ø4	Ø	Ø	Ø	Ø	Ø	Ø	Ø	Ø	Ø	Ø	Ø	Ø	Ø	1	Ø	Ø	PREEMPTIVE STACK POINTER

STPM TABLE:

(STPM) 8	USE
4	BUS ERROR TRAPS (BERR + STALL) FOR ODD ADRS AND RED ZONE OVFLW
	TRAP INSTR (MUTUALLY EXCLUSIVE)
4	ILLEGAL INSTR
1Ø	RESERVED INSTR
14	BPT INSTR
2Ø	IOT INSTR
3Ø	EMT INSTR
34	TRAP INSTR
14	TRACE TRAP (PS(T))
4	OVFL (YELLOW ZONE)
24	POWER DOWN (PWRON)

NOTE: PERR (1) CAUSES BERR (1)
PERR (1) * BERR (1) PRODUCES
BC = 114_8.

-PRODUCED BY THE AUTOMATED DRAFTING SYSTEM-

UNLESS OTHERWISE SPECIFIED
DIMENSIONS IN INCHES
TOLERANCES
DECIMALS ± .005 FRACTIONS ± 1/64 ANGLES ± 0°30'
FINAL SURFACE QUALITY ✓
REMOVE BURRS AND BREAK SHARP CORNERS

MATERIAL

FINISH

DRN. DATE 2-7-72
CHKD. DATE 7/26/72
DATE 7/26/72
DATE 7/26/72
DATE 2-1-72

FIRST USED ON PDP11

SCALE —/—/—

SHEET 5 OF 8

DIGITAL EQUIPMENT CORPORATION
MAYNARD, MASSACHUSETTS

TITLE STATUS CONSTANTS KS-5

SIZE D CODE CS NUMBER M7235-Ø-1 REV. H

DIST.

AUG 27 1971

This drawing and specifications, herein, are the property of Digital Equipment Corporation and shall not be reproduced or copied or used in whole or in part as the basis for the manufacture or sale of items without written permission.

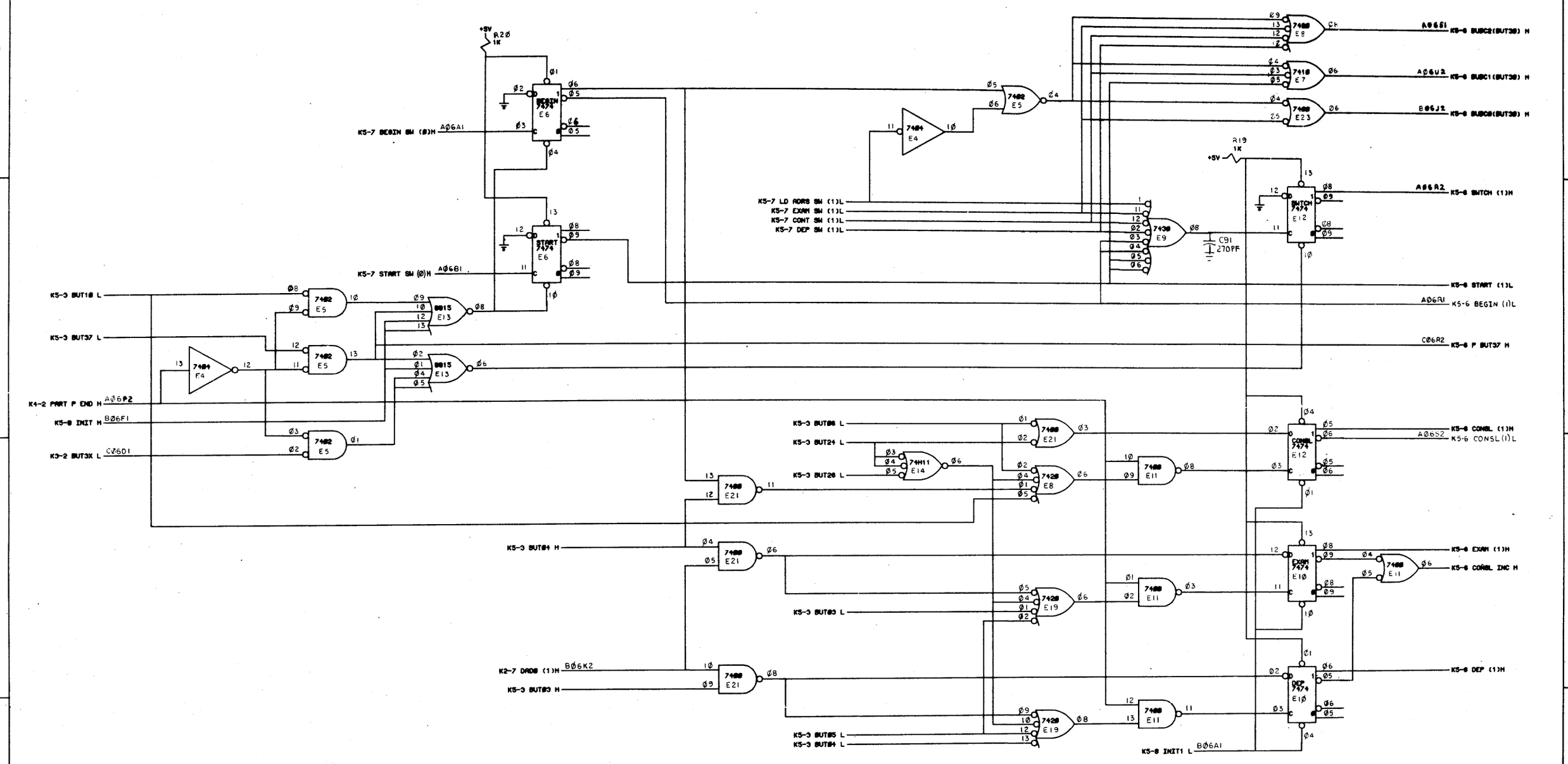

-PRODUCED BY THE AUTOMATED DRAFTING SYSTEM-

UNLESS OTHERWISE SPECIFIED
DIMENSION IN INCHES
TOLERANCES
DECIMALS ± .005 FRACTIONS ± 1/64 ANGLES ± 0°30'
FINAL SURFACE QUALITY ✓
REMOVE BURRS AND BREAK SHARP CORNERS

MATERIAL

FINISH

DRN. DATE 2-8-72
CHK'D. DATE 7/26/72
ENG. DATE 7/26/72
PROJ. ENG. DATE 7/26/72
PROD. DATE 7-7-72

FIRST USED ON PDP11

SCALE

SHEET 8 OF 8

DIGITAL EQUIPMENT CORPORATION
MAYNARD, MASSACHUSETTS

TITLE
STATUS
CONSOLE K5-6

SIZE D CODE CS NUMBER M7235-0-1 REV. H

DIST.

ABS 67 1971

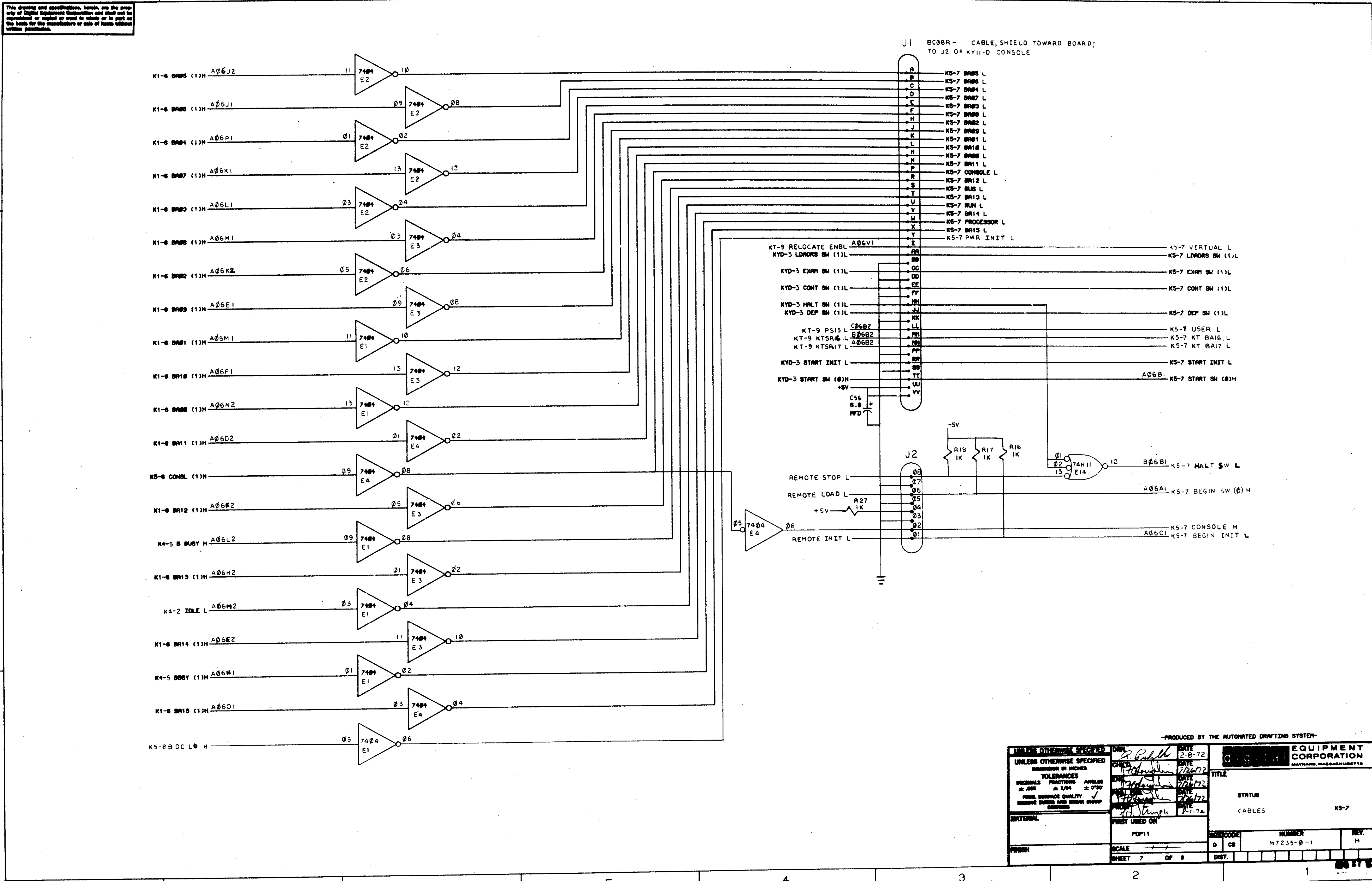

This drawing and specifications, herein, are the property of Digital Equipment Corporation and shall not be reproduced or copied or used in whole or in part as the basis for the manufacture or sale of items without written permission.
J1 BC08R - CABLE, SHIELD TOWARD BOARD; TO J2 OF KY11-D CONSOLE
K1-6 BA05 (1)H A06J2
K1-6 BA06 (1)H A06J1
K1-6 BA04 (1)H A06P1
K1-6 BA07 (1)H A06K1
K1-6 BA03 (1)H A06L1
K1-6 BA08 (1)H A06H1
K1-6 BA02 (1)H A06K2
K1-6 BA09 (1)H A06E1
K1-6 BA01 (1)H A06M1
K1-6 BA10 (1)H A06F1
K1-6 BA00 (1)H A06N2
K1-6 BA11 (1)H A06D2
K5-6 CONSL (1)H
K1-6 BA12 (1)H A06F2
K4-5 B BUSY H A06L2
K1-6 BA13 (1)H A06H2
K4-2 IDLE L A06M2
K1-6 BA14 (1)H A06E2
K4-5 BBSY (1)H A06N1
K1-6 BA15 (1)H A06D1
K5-8 BDC L0 H
7404
K5-7 BA05 L
K5-7 BA06 L
K5-7 BA04 L
K5-7 BA07 L
K5-7 BA03 L
K5-7 BA08 L
K5-7 BA02 L
K5-7 BA09 L
K5-7 BA01 L
K5-7 BA10 L
K5-7 BA00 L
K5-7 BA11 L
K5-7 CONSOLE L
K5-7 BA12 L
K5-7 BUS L
K5-7 BA13 L
K5-7 RUN L
K5-7 BA14 L
K5-7 PROCESSOR L
K5-7 BA15 L
K5-7 PWR INIT L
KT-9 RELOCATE ENBL A06V1
KYD-3 LOADRS SW (1)L
KYD-3 EXAM SW (1)L
KYD-3 CONT SW (1)L
KYD-3 HALT SW (1)L
KYD-3 DEP SW (1)L
KT-9 PS15 L C06B2
KT-9 KTSR16 L B06B2
KT-9 KTSR17 L A06B2
KYD-3 START INIT L
KYD-3 START SW (0)H
+5V
C56 6.8 MFD
K5-7 VIRTUAL L
K5-7 LOADRS SW (1)L
K5-7 EXAM SW (1)L
K5-7 CONT SW (1)L
K5-7 DEP SW (1)L
K5-7 USER L
K5-7 KT BA16 L
K5-7 KT BA17 L
K5-7 START INIT L
A06B1 K5-7 START SW (0)H
J2
REMOTE STOP L
REMOTE LOAD L
R27 1K
REMOTE INIT L
R18 1K
R17 1K
R16 1K
74H11 E14
B06B1 K5-7 HALT SW L
A06A1 K5-7 BEGIN SW (0) H
K5-7 CONSOLE H
A06C1 K5-7 BEGIN INIT L
-PRODUCED BY THE AUTOMATED DRAFTING SYSTEM-
UNLESS OTHERWISE SPECIFIED DIMENSIONS IN INCHES TOLERANCES
DATE 2-8-72
7/26/72
8-1-72
FIRST USED ON PDP11
SCALE
SHEET 7 OF 8
EQUIPMENT CORPORATION MAYNARD, MASSACHUSETTS
TITLE STATUS CABLES K5-7
SIZE D CODE CS NUMBER M7235-0-1 REV. H

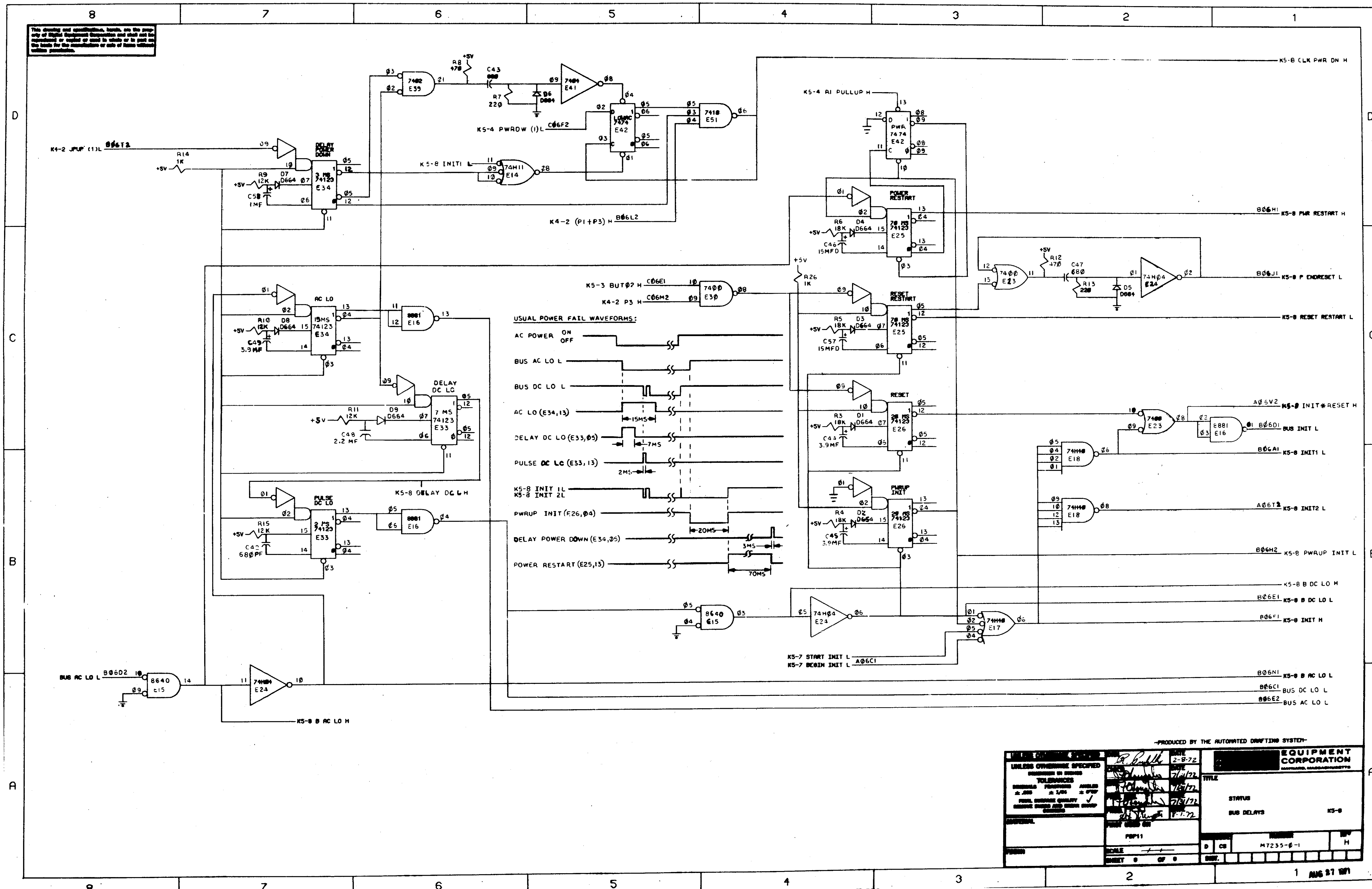

K4-2 JPUP (1)L B06T2
DELAY POWER DOWN 3 MS 74123 E34
K5-4 PWROW (1)L C06F2
K5-8 INIT1 L
7402 E39
7404 E41
7474 E42
74H11 E14
7410 E51
K4-2 (P1+P3) H B06L2
K5-8 CLK PWR DN H
K5-4 A1 PULLUP H
PWR 7474 E42
POWER RESTART 70 MS 74123 E25
B06H1 K5-8 PWR RESTART H
RESET RESTART 70 MS 74123 E25
K5-8 RESET RESTART L
7400 E23
74H04 E24
B06J1 K5-8 P ENDRESET L
AC LO 15MS 74123 E34
8881 E16
DELAY DC LO 7 MS 74123 E33
K5-8 DELAY DC LO H
PULSE DC LO 2 MS 74123 E33
K5-3 BUT02 H C06E1
K4-2 P3 H C06M2
7400 E30
USUAL POWER FAIL WAVEFORMS:
AC POWER ON OFF
BUS AC LO L
BUS DC LO L
AC LO (E34,13)
15MS
DELAY DC LO (E33,05)
7MS
PULSE DC LC (E33,13)
2MS
K5-8 INIT 1L
K5-8 INIT 2L
PWRUP INIT (E26,04)
20MS
DELAY POWER DOWN (E34,05)
3MS
POWER RESTART (E25,13)
70MS
RESET 20 MS 74123 E26
PWRUP INIT 20 MS 74123 E26
A05V2 K5-8 INIT*RESET H
B06D1 BUS INIT L
B06A1 K5-8 INIT1 L
A06T2 K5-8 INIT2 L
B06H2 K5-8 PWRUP INIT L
K5-8 B DC LO H
B06E1 K5-8 B DC LO L
B06F1 K5-8 INIT H
74H10 E18
74H10 E17
8640 E15
K5-7 START INIT L
K5-7 BEGIN INIT L A06C1
BUS AC LO L B06D2
8640 E15
74H04 E24
B06N1 K5-8 B AC LO L
B06C1 BUS DC LO L
B06E2 BUS AC LO L
K5-8 B AC LO H
-PRODUCED BY THE AUTOMATED DRAFTING SYSTEM-
EQUIPMENT CORPORATION
UNLESS OTHERWISE SPECIFIED
TOLERANCES
2-8-72
7/31/72
7/31/72
7/31/72
8-1-72
TITLE
STATUS
BUS DELAYS
K5-8
PDP11
M7235-0-1
H
AUG 27 1971

This drawing and specifications, herein, are the property of Digital Equipment Corporation and shall not be reproduced or copied or used in whole or in part as the basis for the manufacture or sale of items without written permission.

NOTES:

1. CONNECTOR MODULE, M981 INTERCONNECTES THE KD11-A PROCESSOR WITH A NEXT UNIBUS DEVICE. RESISTIVE TERMINATION OF THE UNIBUS IS ALSO PROVIDED.
2. COMPONENTS ARE LOCATED IN AND POWERED FROM THAT PORTION OF THE MODULE IN THE NEXT DEVICE. GROUND IS CONNECTED BETWEEN THE KD11-A AND THE NEXT DEVICE.
3. SIGNALS ON THE LEFT OF THE CONNECTORS ONLY OUTPUT FROM THE KD11-A. SIGNALS TO THE RIGHT OF THE CONNECTORS ARE RECEIVED AND TRANSMITTED FROM THE KD11-A.

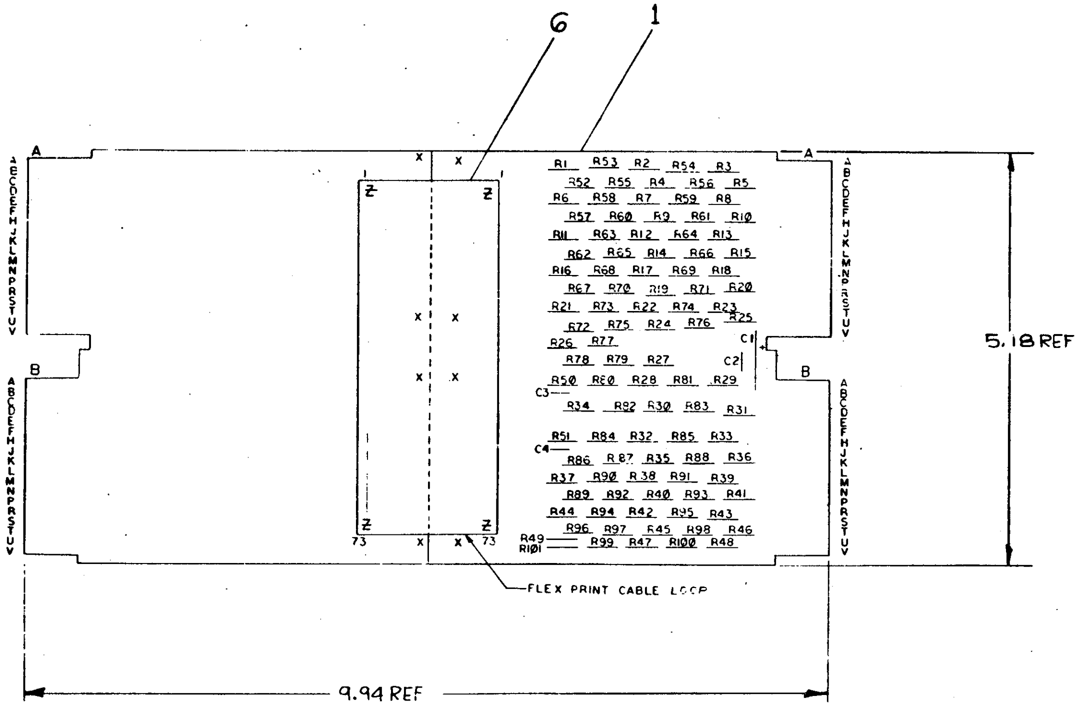

QTY	REF DESIGNATION	DESCRIPTION	PART NO.	ITEM NO.
AR		CABLE FLEXPRINT, 2 7/16 LG	9105692-5	6
50	R52 THRU R1Ø1	RES. 178 1/4W. 1%	1311422	5
51	R1 THRU R51	RES. 383 1/4W. 1%	1305125	4
1	C1	CAP. 39 MFD 10V 10%	1000076	3
3	C2, C3, C4	CAP. 1ØØØ MMF 1ØØØV 20%	1000043	2
1		ETCHED CIRCUIT BOARD	5009763	1

PARTS LIST

FIRST USED ON OPTION MODEL: KD11-A

ETCH BOARD REV: F

REV	CHANGE NO.			
J	5409764-00003	JOHN ROGERS	10-21-74	10-28-74
H	5409764-00002	J BURYNSKI	10/23/73	12/27/73
F	5409764-00001	J. O'COUGHLIN	6/28/73	8-10-73
E	ORIGINATED			

REVISIONS

DEC NO.	EIA NO.	DEC NO.	EIA NO.

SEMICONDUCTOR CONVERSION CHART

IC TYPE	GND	+ 5V

GND AND 5V ARE USUALLY PIN 7 AND 14 RESPECTIVELY EXCEPTIONS ARE STATED ABOVE

IC PIN LOCATIONS

DRN DATE 7/12/72
CHK'D DATE 7/14/72
ENG. DATE 7/14/72
PROD. ENG. DATE 7/14/72
PROD. DATE

NEXT HIGHER ASSY: D-UA-M981-0-0

digital EQUIPMENT CORPORATION MAYNARD MASSACHUSETTS

TITLE: INTERNAL UNIBUS AND TERMINATOR

SIZE: D CODE: CS NUMBER: 5409764-0-1 REV.: J

SCALE —

SHEET 1 OF 2

DIST.

This drawing and specifications, herein, are the property of Digital Equipment Corporation and shall not be reproduced or copied or used in whole or in part as the basis for the manufacture or sale of items without written permission

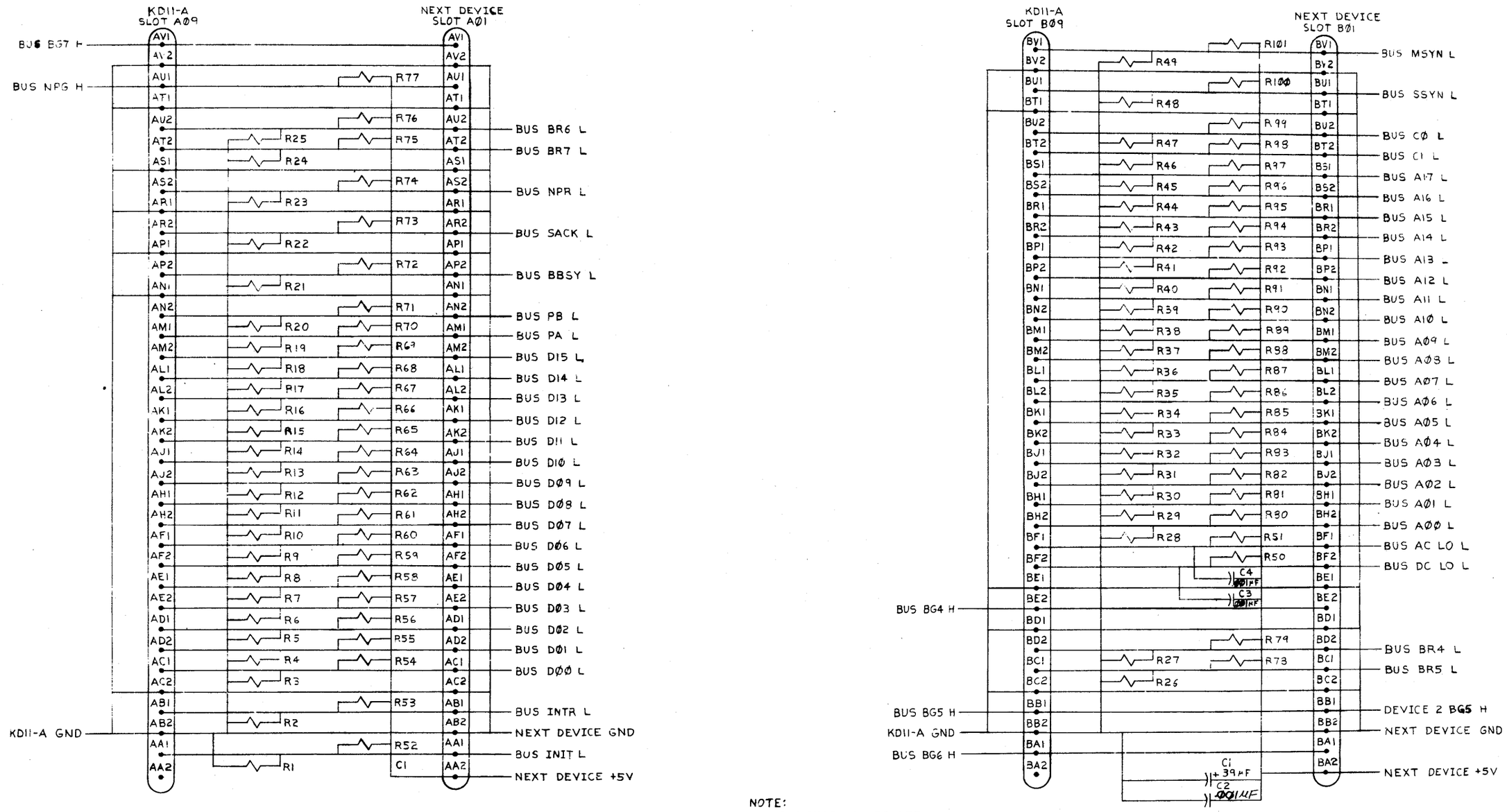

NOTE:
RESISTOR VALUES ARE:
R1 THRU R51 ARE 383Ω
R52 THRU R101 ARE 178Ω

FIRST USED ON OPTION/MODEL	QTY.	DESCRIPTION	PART NO.	ITEM NO.
KD11-A		PARTS LIST		

UNLESS OTHERWISE SPECIFIED DIMENSION IN INCHES TOLERANCES

DECIMALS	ANGLES
.XXX = .005 .XX = .02 .X = .1	±0° 30'

REMOVE BURRS AND BREAK SHARP CORNERS SURFACE QUALITY ✓

MATERIAL —/—

FINISH —/—

		DATE
DRN		6-12-72
CHKD		7/14/72
ENG		7/14/72
PROJ ENG		7/14/72
MOD OP		7/14/72

digital EQUIPMENT CORPORATION MAYNARD MASSACHUSETTS

TITLE INTERNAL UNIBUS AND TERMINATOR

NEXT HIGHER ASSY. D-UA-M981-0-0

SCALE NONE

SHEET 2 OF 2

SIZE	CODE	NUMBER	REV.
D	CS	5409764-0-1	J

DIST.

REVISIONS		
CHK	CHANGE NO	REV

BRUNING 40-522 15840

DEC FORM NO DRD 102-B

"THIS DRAWING AND SPECIFICATIONS, HEREIN, ARE THE PROPERTY OF DIGITAL EQUIPMENT CORPORATION AND SHALL NOT BE REPRODUCED OR COPIED OR USED IN WHOLE OR IN PART AS THE BASIS FOR THE MANUFACTURE OR SALE OF ITEMS WITHOUT WRITTEN PERMISSION.
COPYRIGHT © JUNE, 1974 DIGITAL EQUIPMENT CORPORATION"

NOTES:

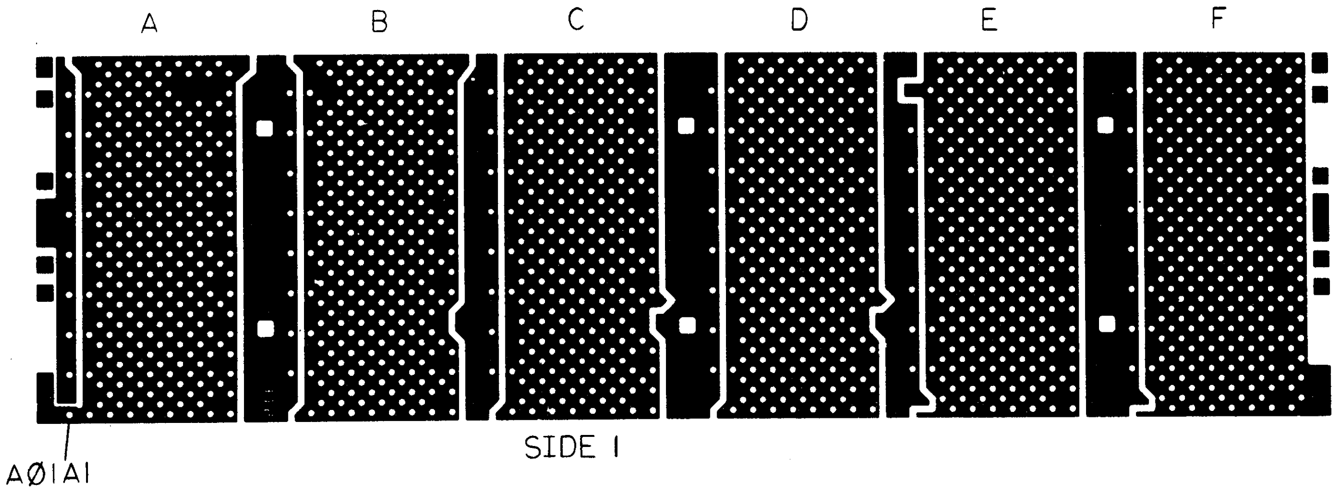

SIDE 1

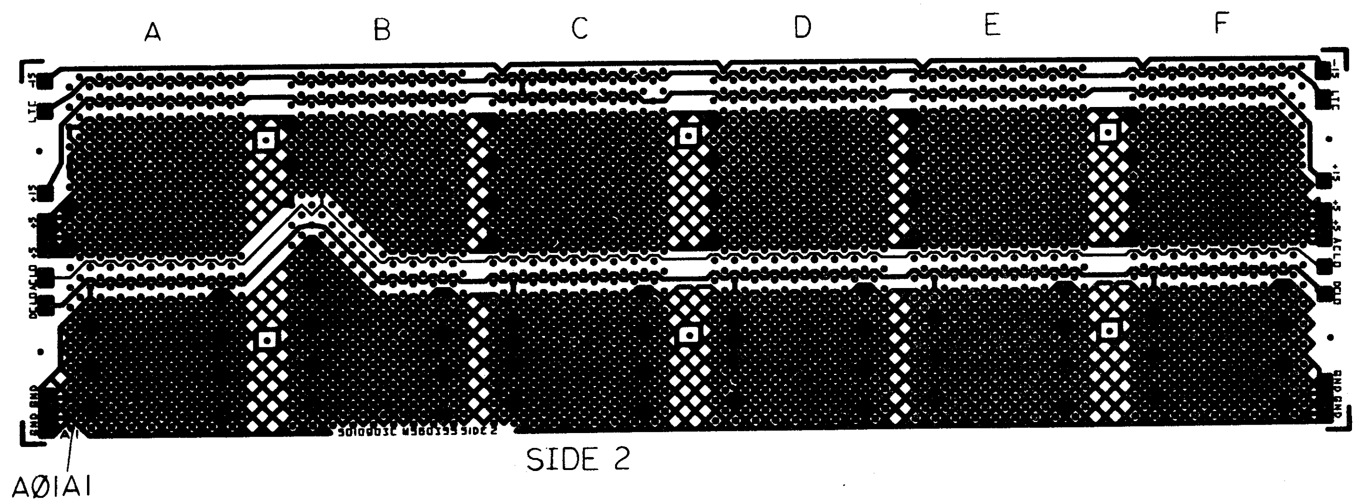

SIDE 2

QTY	REF. DESIGNATION	DESCRIPTION	PART NO.	ITEM NO.
REF		KD11-A AWT REV STATUS	A-WT-7010230-0	5
REF		MODULE ECO HISTORY	B-MH-5410904-0-6	4
REF		ASSY/DRILLING HOLE LAYOUT	D-AH-5410904-0-5	3
REF		X-Y COORDINATE HOLE LOCATION	K-CO-5410904-0-4	2
1		ETCHED CIRCUIT BOARD	5010903	1

PARTS LIST

IC TYPE	GND	+5V

GND AND 5V ARE USUALLY PIN 7 AND 14 RESPECTIVELY EXCEPTIONS ARE STATED ABOVE

IC PIN LOCATIONS

DEC NO.	EIA NO.	DEC NO.	EIA NO.

SEMICONDUCTOR CONVERSION CHART

CHK	CHANGE NO.	REV.
JOHN ROGERS 10-15-74	5410904-1 10-03-74	C

REVISIONS

FIRST USED ON OPTION MODEL: KD11-A

ETCH BOARD REV. C

DRN. J. Vincent DATE 6-21-74
CHK'D. DATE 7-31-74
ENG. DATE 8-2-74
PROJ. ENG. DATE 8-5-74
PROD. DATE 8/1/74

NEXT HIGHER ASSY: D-AD-7010085-0-0

SCALE: NONE
SHEET 1 OF 1

digital

TITLE: CIRCUIT SCHEMATIC (KD11-A)

SIZE: D CODE: CS NUMBER: 5410904-0-1 REV.: C

DIST.

D CS 5410904-0-1 C

D CS 5410904-0-1 C

This drawing and specifications, herein, are the property of Digital Equipment Corporation and shall not be reproduced or copied or used in whole or in part as the basis for the manufacture or sale of items without written permission.

WIRE LIST CHARACTERISTICS:

1. SIGNAL NAMES ARE LISTED WITHOUT THEIR PRINT SOURCE PREFIX. THIS AIDS ALPHLABETICAL SEARCHES.

2. THE PRINT OR PRINTS UPON WHICH A GIVEN PIN ENTRY APPEARS IS NOTED IN THE "DRAW" COLUMN. MULTIPLE SHEET ENTRIES ARE NOTED WITHOUT COMMA'S WITH THE PRINT DESIGNATORS. FOR EXAMPLE "K4-235", INDICATES ENTRIES ON SHEETS 2,3 and 5 IN THE K4 MODULE PRINTS, NO PRINT SETS HAVE MORE THAN NINE PAGES.

3. THE PRINT PREFIX AND THE ORIGIN OF THE SIGNAL CAN BE DETERMINED BY THE SOURCE NOTATION IN THE "REMARK" COLUMN. THIS SOURCE ENTRY, PRINT PREFIX IS USED BEFORE THE SIGNAL NAME ON ALL DRAWINGS. MULTIPLE SHEET ENTRIES HAVE THE SPECIFIC PRINT NOTED.

4. BUS SIGNALS WHICH OFTEN HAVE MULTIPLE (WIRED OR) SOURCES DO NOT HAVE PRINT PREFIXES. THE USE OF "BUS" IN THE NAME IDENTIFIES THESE SIGNALS, SIGNALS FOR +5V AND GND ALSO HAVE NO PRINT PREFIX.

5. THE WIRE LIST CONTAINS ETCH BACKPANEL CONNECTIONS AS WELL AS WIRE WRAP CONNECTIONS. ETCH IS IDENTIFIED BY AN "H" IN THE "Q" COLUMN AND A "P" IN THE "REMARK" COLUMN. "EXCEPTION" COLUMN NOTATIONS FOR ETCH CONNECTIONS SHOULD BE IGNORED.
THE WIRE LIST ALSO CONTAINS TWISTED PAIR CONNECTIONS WHICH ARE IDENTIFIED BY AN "H" IN THE "Q" COLUMN AND "TWP" IN THE "REMARKS" COLUMN.

FIRST USED ON OPTION MODEL	QTY.	DESCRIPTION	PART NO.	ITEM NO.
PDP 11		PARTS LIST		

DRN.		DATE 7/31/72
CHKD.		DATE 7/31/72
ENG.		DATE 7/31/72
PROJ. ENG.		DATE 7/31/72
PROD.		DATE 8-2-72

NEXT HIGHER ASSEMBLY: D-AD-7010230-0-0

SCALE

SHEET 1 OF 1

digital EQUIPMENT CORPORATION MAYNARD, MASSACHUSETTS

TITLE: BACK PLANE (KD11-A PROCESSOR)

SIZE	CODE	NUMBER	REV.
K	WL	KD11-A-WL	N

DIST.

REVISIONS

CHK	CHANGE NO.	REV.
KP	KD11A-00013	L
KP	KD11A-00014	M
KP	KD11A-00015	N

DEC FORM NO. DRB 109

RUN NAME	A/P	PIN NAME	ORDER PIN	BAY - ORDER	Q	DRAW	RV	RG	Y	X	Z	REMARKS	NC FLAG	LENGTH	EXCEPTIONS	RUN NUMBER
						OPT										
(P1+P3)	H	B06L2		1-01 *			K5-48				1		N	6-1/8		1
(P1+P3)	H	D08J1		1-02 *			KT-2				2		N	3-1/8		1
(P1+P3)	H	E07J2		1-03 *			K4-24					SOURCE (K4-2)				1
(P1+P3)	H			1										9-2/8		1
+15V		C09U1			P										1-PIN RUN	2
+5V		A01A2		1-01 *	P						1			1		3
+5V		A02A2		1-02 *	P						2			1		3
+5V		A03A2		1-03 *	P						1			1		3
+5V		A04A2		1-04 *	P						2			1		3
+5V		A05A2		1-05 *	P						1			1		3
+5V		A06A2		1-06 *	P						2			1		3
+5V		A07A2		1-07 *	P						1			1		3
+5V		A08A2		1-08 *	P						2			1		3
+5V		A09A2		1-09 *	P						1			3-2/8		3
+5V		B09A2		1-10 *	P						2			1		3
+5V		B08A2		1-11 *	P						1			1		3
+5V		B07A2		1-12 *	P						2			1		3
+5V		B06A2		1-13 *	P						1			1		3
+5V		B05A2		1-14 *	P						2			1		3
+5V		B04A2		1-15 *	P						1			1		3
+5V		B03A2		1-16 *	P						2			1		3
+5V		B02A2		1-17 *	P						1			1		3
+5V		B01A2		1-18 *	P						2			3		3
+5V		C01A2		1-19 *	P						1			1		3
+5V		C02A2		1-20 *	P						2			0-5/8		3
+5V		B03V1		1-21 *	P						1			0-5/8		3
+5V		C03A2		1-22 *	P						2			1		3
+5V		C04A2		1-23 *	P						1			1		3
+5V		C05A2		1-24 *	P						2			1		3
+5V		C06A2		1-25 *	P						1			1		3
+5V		C07A2		1-26 *	P						2			1		3
+5V		C08A2		1-27 *	P						1			1		3
+5V		C09A2		1-28 *	P						2			3-2/8		3
+5V		D09A2		1-29 *	P						1			1		3
+5V		D08A2		1-30 *	P						2			1		3
+5V		D07A2		1-31 *	P						1			1		3
+5V		D06A2		1-32 *	P						2			1		3
+5V		D05A2		1-33 *	P						1			1		3
+5V		D04A2		1-34 *	P						2			1		3
+5V		D03A2		1-35 *	P						1			1		3
+5V		D02A2		1-36 *	P						2			1		3
+5V		D01A2		1-37 *	P						1			1-5/8		3
+5V		C03V1		1-38 *	P						2			3-2/8		3
+5V		D03V1		1-39 *	P						1			0-5/8		3
+5V		E02A2		1-40 *	P						2			1-1/8		3
+5V		E01B1		1-41 *	P						1			0-1/8		3
+5V		E01A2		1-42 *	P						2			1-4/8		3
+5V		E03A2		1-43 *	P						1			1		3
+5V		E04A2		1-44 *	P						2			1		3
+5V		E05A2		1-45 *	P						1			1		3
+5V		E06A2		1-46 *	P						2			1		3
+5V		E07A2		1-47 *	P						1			1		3
+5V		E08A2		1-48 *	P						2			1		3
+5V		E09A2		1-49 *	P						1			3-2/8		3

RUN NAME	A/P	PIN NAME	ORDER PIN	BAY - ORDER	Q	DRAW OPT	RV	RG	Y	X	Z	REMARKS	NC FLAG	LENGTH	EXCEPTIONS	RUN NUMBER
+5V		F09A2		1-50 *	P						2			1		3
+5V		F08A2		1-51 *	P						1			1		3
+5V		F07A2		1-52 *	P						2			1		3
+5V		F06A2		1-53 *	P						1			1		3
+5V		F05A2		1-54 *	P						2			1		3
+5V		F04A2		1-55 *	P						1			1		3
+5V		F03A2		1-56 *	P						2			1		3
+5V		F02A2		1-57 *	P						1			1		3
+5V		F01A2		1-58 *	P						2			0-1/8		3
+5V		F01B1		1-59 *												3
+5V				1										67-3/8		3
-15V		C09B2		1-01 *	P						1			3-2/8		4
-15V		D09B2		1-02 *	P						2			3		4
-15V		F09B2		1-03 *	P						1			3-2/8		4
-15V		F09B2		1-04 *												4
-15V				1										9-4/8		4
A INTR DONE	H	F09L2		1-01 *			DD				1	SOURCE	N	1		5
A INTR DONE	H	F09R1		1-02 *			DD									5
A INTR DONE	H			1										1-0/8		5
A MASTER	L	F09D2		1-01 *			DD				2		N	1-6/8		6
A MASTER	L	F09R2		1-02 *			DD				1		N	0-4/8		6
A MASTER	L	F09N1		1-03 *			DD					SOURCE				6
A MASTER	L			1										2-2/8		6
ADRS (777774)	H	B07A1		1-01 *			K4-6				1	SOURCE	N	12-1/8		7
ADRS (777774)	H	E03U1		1-02 *			KJ-2									7
ADRS (777774)	H			1										12-1/8		7
ALU00	H	C02P2		1-01 *			KE-26				1		N	8-1/8		8
ALU00	H	F04F1		1-02 *			K1-2					SOURCE				8
ALU00	H			1										8-1/8		8
ALU07	H	B04J1					K1-3					SOURCE			1-PIN RUN	9
ALU15	H	B04J2					K1-5					SOURCE			1-PIN RUN	10
ALUM	H	A05H1		1-01 *			K3-8				1	SOURCE	N	4-1/8		11
ALUM	H	B04P2		1-02 *			K1-2345									11
ALUM	H			1										4-1/8		11
ALUS0	H	A05M1		1-01 *			K3-8				1	SOURCE	N	3-3/8		12
ALUS0	H	B04K1		1-02 *			K1-2345									12
ALUS0	H			1										3-3/8		12
ALUS1	H	A05K1		1-01 *			K3-8				1	SOURCE	N	4-3/8		13
ALUS1	H	B04S1		1-02 *			K1-2345									13
ALUS1	H			1										4-3/8		13
ALUS2	H	A05J1		1-01 *			K3-8				1	SOURCE	N	3-5/8		14
ALUS2	H	B04J1		1-02 *			K1-2345									14
ALUS2	H			1										3-5/8		14

RUN NAME	A/P	PIN NAME	ORDER PIN	BAY - ORDER	Q	DRAW OPT	RV	RG	Y	X	Z	REMARKS	NC FLAG	LENGTH	EXCEPTIONS	RUN NUMBER
ALUS3	H	A05L1		1-01 *			K3-8				1	SOURCE	N	3-3/8		15
ALUS3	H	B04H1		1-02 *			K1-2345									15
ALUS3	H			1										3-3/8		15
ARGA (1)	H	A01K1		1-01 *			KF-4				1	SOURCE	N	9-1/8		16
ARGA (1)	H	D02L1		1-02 *			KE-9									16
ARGA (1)	H			1										9-1/8		16
ASH	L	A02P2					KE-4					SOURCE			1-PIN RUN	17
ASHC	L	A02P2					KE-24					SOURCE (KE-4)			1-PIN RUN	18
AWBY (1)	H	B06S2		1-01 *			K5-4				1	SOURCE	N	5-5/8		19
AWBY (1)	H	D07L2		1-02 *			K4-25									19
AWBY (1)	H			1										5-5/8		19
B AC LO	L	B06N1		1-01 *			K5-8				2	SOURCE	N	1-1/8		20
B AC LO	L	B07P2		1-02 *			K4-5				1		N	10-7/8		20
B AC LO	L	F07M1		1-03 *			K4-3									20
B AC LO	L			1										12-0/8		20
B BRSY	H	A06L2		1-01 *			K5-7				1		N	4-3/8		21
B BRSY	H	B07U2		1-02 *			K4-5					SOURCE				21
B BRSY	H			1										4-3/8		21
B DC LO	L	B06E1		1-01 *			K5-8				1	SOURCE	N	9-7/8		22
B DC LO	L	E07R1		1-02 *			K4-2									22
B DC LO	L			1										9-7/8		22
B EUPP8A	H	C02R2					KE-4								1-PIN RUN	23
B EUPP8B	H	D02D2		1-01 *	1						1		N	3-5/8		24
B EUPP8B	H	C01H1		1-02 *			KF-4									24
B EUPP8B	H			1										3-5/8		24
B INIT	L	C08T2		1-01 *			KI-2				2		N	1-5/8		25
B INIT	L	C07M1		1-02 *			K4-6				1	SOURCE	N	7-3/8		25
B INIT	L	E03L1		1-03 *			KJ-2									25
B INIT	L			1										9-0/8		25
B INTR	H	D06L2		1-01 *			K5-4				2		N	2-1/8		26
B INTR	H	E07C1		1-02 *			K4-24				1	SOURCE (K4-4)	N	4-3/8		26
B INTR	H	F05H2		1-03 *			K3-2									26
B INTR	H			1										6-4/8		26
B INTR DONE	H	F09M2		1-01 *			DD				1	SOURCE	N	1		27
B INTR DONE	H	F09S1		1-02 *			DD									27
B INTR DONE	H			1										1-0/8		27
B MASTER	L	F09P2		1-01 *			DD				1		N	0-4/8		28
B MASTER	L	F09S2		1-02 *			DD					SOURCE				28
B MASTER	L			1										0-4/8		28
B MSYN	H	B07S1		1-01 *			K4-4				1	SOURCE	N	12-5/8		29
B MSYN	H	F01E1		1-02 *			KM-2									29
B MSYN	H			1										12-5/8		29

RUN NAME	A/P	PIN NAME	ORDER PIN	BAY - ORDER	Q	DRAW OPT	RV RG Y	X	Z	REMARKS	NC FLAG	LENGTH	EXCEPTIONS	RUN NUMBER
B SSYN	H	C07A1		1-01 *			K4-256		1	SOURCE (K4-6)	N	12-5/8		30
B SSYN	H	F01M1		1-02 *			KM-2							30
B SSYN	H			1								12-5/8		30
B WAIT (1)	H	A07L2					K4-4			SOURCE			1-PIN RUN	31
B07 (1)	H	A04N1					K1-345			SOURCE (K1-3)			1-PIN RUN	32
B15 (1)	H	A04P1		1-01 *			K1-35		2	SOURCE (K1-5)	N	3-5/8		33
B15 (1)	H	B02M2		1-02 *			KE-45		1		N	5-3/8		33
B15 (1)	H	D01E2		1-03 *			KF-4		2		N	4-3/8		33
B15 (1)	H	E01S1		1-04 *			KM-2							33
B15 (1)	H			1								13-3/8		33
BA(06:03)=0	H	D04K1					K1-7			SOURCE			1-PIN RUN	34
BA(06:03)=1	H	D04D2					K1-7			SOURCE			1-PIN RUN	35
BA(07:05)=1	L	B04P1		1-01 *			K1-7		1	SOURCE	N	7-1/8		36
BA(07:05)=1	L	E03A1		1-02 *			KJ-2							36
BA(07:05)=1	L			1								7-1/8		36
BA(15:08)=1	L	B04N2					K1-7			SOURCE			1-PIN RUN	37
BA(17:16)	H	A04S2		1-01 *			K1-69		1	SOURCE (K1-6)	N	6-7/8		38
BA(17:16)	H	C08K2		1-02 *			KT-9							38
BA(17:16)	H			1								6-7/8		38
BA00 (1)	H	A08F2		1-01 *			KT-8		1		N	1-2/8		39
BA00 (1)	H	A07F1		1-02 *			K4-4		2		N	1-3/8		39
BA00 (1)	H	A06N2		1-03 *			K5-7		1		N	9-5/8		39
BA00 (1)	H	D05S1		1-04 *			K3-7		2		N	5-1/8		39
BA00 (1)	H	F04J1		1-05 *			K1-68			SOURCE (K1-6)				39
BA00 (1)	H			1								17-3/8		39
BA01 (1)	H	A08E2		1-01 *			KT-8		1		N	2-2/8		40
BA01 (1)	H	A06M1		1-02 *			K5-7		2		N	13-7/8		40
BA01 (1)	H	F04F1		1-03 *			K1-678			SOURCE (K1-6)				40
BA01 (1)	H			1								16-1/8		40
BA02 (1)	H	A08H2		1-01 *			KT-8		2		N	1-5/8		41
BA02 (1)	H	A06K2		1-02 *			K5-7		1		N	13-7/8		41
BA02 (1)	H	F04B1		1-03 *			K1-678			SOURCE (K1-6)				41
BA02 (1)	H			1								15-4/8		41
BA03 (1)	H	A08D2		1-01 *			KT-8		2		N	2-2/8		42
BA03 (1)	H	A06L1		1-02 *			K5-7		1		N	9-1/8		42
BA03 (1)	H	D04K2		1-03 *			D1-678			SOURCE (K1-6)				42
BA03 (1)	H			1								11-3/8		42
BA04 (1)	H	A08K2		1-01 *			KT-8		2		N	2-1/8		43
BA04 (1)	H	A06P1		1-02 *			K5-7		1		N	7-7/8		43
BA04 (1)	H	D04B1		1-03 *			K1-67			SOURCE (K1-6)				43
BA04 (1)	H			1								10-0/8		43

RUN NAME	A/P	PIN NAME	ORDER PIN	BAY - ORDER	Q	DRAW OPT	RV RG Y	X	Z	REMARKS	NC FLAG	LENGTH	EXCEPTIONS	RUN NUMBER
BA05 (1)	H	A08A1		1-01 *			KT-8		2		N	1-5/8		44
BA05 (1)	H	A06J2		1-02 *			K5-7		1		N	7-3/8		44
BA05 (1)	H	C04R2		1-03 *			K1-67			SOURCE (K1-6)				44
BA05 (1)	H			1								9-0/8		44
BA06 (1)	H	A08J2		1-01 *			KT-8		2		N	1-6/8		45
BA06 (1)	H	A06J1		1-02 *			K5-7		1		N	7-3/8		45
BA06 (1)	H	C04T2		1-03 *			K1-67			SOURCE (K1-6)				45
BA06 (1)	H			1								9-1/8		45
BA07 (1)	H	A08B1		1-01 *			KT-8		2		N	1-7/8		46
BA07 (1)	H	A06K1		1-02 *			K5-7		1		N	8-7/8		46
BA07 (1)	H	D04E1		1-03 *			K1-67			SOURCE (K1-6)				46
BA07 (1)	H			1								10-6/8		46
BA08 (1)	H	A06H1		1-01 *			K5-7		1		N	3-7/8		47
BA08 (1)	H	B08E1		1-02 *			KT-8		2		N	4-5/8		47
BA08 (1)	H	C04F2		1-03 *			K1-67		1	SOURCE (K1-6)	N	6-1/8		47
BA08 (1)	H	E03D1		1-04 *			KJ-2							47
BA08 (1)	H			1								14-5/8		47
BA09 (1)	H	A06E1		1-01 *			K5-7		1		N	4-3/8		48
BA09 (1)	H	B08E2		1-02 *			KT-8		2		N	3-7/8		48
BA09 (1)	H	C04D2		1-03 *			K1-67		1	SOURCE (K1-6)	N	6-3/8		48
BA09 (1)	H	E03C1		1-04 *			KJ-2							48
BA09 (1)	H			1								14-5/8		48
BA10 (1)	H	A06F1		1-01 *			K5-7		1		N	4-7/8		49
BA10 (1)	H	B08M2		1-02 *			KT-8		2		N	3-3/8		49
BA10 (1)	H	C04F1		1-03 *			K1-67		1	SOURCE (K1-6)	N	5-5/8		49
BA10 (1)	H	E03B1		1-04 *			KJ-2							49
BA10 (1)	H			1								13-7/8		49
BA11 (1)	H	A06D2		1-01 *			K5-7		1		N	4-3/8		50
BA11 (1)	H	B08K1		1-02 *			KT-8		2		N	4		50
BA11 (1)	H	C04K1		1-03 *			K1-67		1	SOURCE (K1-6)	N	5-1/8		50
BA11 (1)	H	E03D2		1-04 *			KJ-2							50
BA11 (1)	H			1								13-4/8		50
BA12 (1)	H	A06F2	A04M2	1-01 *			K5-7		1		N	2		51
BA12 (1)	H	A04M2		1-02 *			K1-67		2	SOURCE (K1-67)	N	4-6/8	BIN-COD ER	51
BA12 (1)	H	B08N2		1-03 *			KT-8		1		N	10-5/8		51
BA12 (1)	H	E03N2		1-04 *			KJ-2							51
BA12 (1)	H			1								17-3/8		51
BA13 (1)	H	A06H2	A04P2	1-01 *			K5-7		1		N	1-6/8		52
BA13 (1)	H	A04P2		1-02 *			K1-67		2	SOURCE (K1-6)	N	3-7/8		52
BA13 (1)	H	B08L1		1-03 *			KT-85		1		N	10-5/8		52
BA13 (1)	H	E03M2		1-04 *			KJ-2							52
BA13 (1)	H			1								16-2/8		52
BA14 (1)	H	A04H1		1-01 *			K1-67		2	SOURCE (K1-6)	N	1-7/8		53
BA14 (1)	H	A06E2		1-02 *			K5-7		1		N	6-5/8		53
BA14 (1)	H	C08F1		1-03 *			KT-85		2		N	8-3/8		53
BA14 (1)	H	E03L2		1-04 *			KJ-2							53
BA14 (1)	H			1								16-7/8		53

RUN NAME	A/P	PIN NAME	ORDER PIN	BAY - ORDER	Q	DRAW OPT	RV	RG	Y	X	Z	REMARKS	NC FLAG	LENGTH	EXCEPTIONS	RUN NUMBER
BA15 (1)	H	A04K2		1-01 *				K1-67			2	SOURCE (K1-6)	N	1-5/8		54
BA15 (1)	H	A06D1		1-02 *				K5-7			1		N	6-7/8		54
BA15 (1)	H	C08D2		1-03 *				KT-85			2		N	8-3/8		54
BA15 (1)	H	E03E2		1-04 *				KJ-2								54
BA15 (1)	H			1										16-7/8		54
BBSY (1)	H	A06N1		1-01 *				K5-7			1		N	1-1/8		55
BBSY (1)	H	A07M2		1-02 *				K4-245				SOURCE (K4-5)				55
BBSY (1)	H			1										1-1/8		55
BC(11,08)	H	C04M1		1-01 *				K1-4			1		N	7-5/8		56
BC(11,08)	H	E06T2		1-02 *				K5-5				SOURCE				56
BC(11,08)	H			1										7-5/8		56
BC(15:12,10:09)	H	A04U2		1-01 *				K1-45			1		N	5-7/8		57
BC(15:12,10:09)	H	C06D2		1-02 *				K5-5				SOURCE				57
BC(15:12,10:09)	H			1										5-7/8		57
BC00	H	E04B2		1-01 *				K1-2			1		N	3-5/8		58
BC00	H	F06A1		1-02 *				K5-5				SOURCE				58
BC00	H			1										3-5/8		58
BC00 (0)	H	B07E2		1-01 *				K4-4			1	SOURCE	N	1-5/8		59
BC00 (0)	H	B08N1		1-02 *				KT-36								59
BC00 (0)	H			1										1-5/8		59
BC01	H	E04L2		1-01 *				K1-2			1		N	4-7/8		60
BC01	H	F06T2		1-02 *				K5-5				SOURCE				60
BC01	H			1										4-7/8		60
BC01 (0)	H	A07J1		1-01 *				K4-4			2	SOURCE	N	4-5/8		61
BC01 (0)	H	B08P2		1-02 *				KT-36			1		N	11-1/8		61
BC01 (0)	H	E03V2		1-03 *				KJ-2								61
BC01 (0)	H			1										15-6/8		61
BC02	H	E04R2		1-01 *				K1-2			1		N	3-7/8		62
BC02	H	F06R1		1-02 *				K5-5				SOURCE				62
BC02	H			1										3-7/8		62
BC03	H	E04N2		1-01 *				K1-2			1		N	4-7/8		63
BC03	H	F06V2		1-02 *				K5-5				SOURCE				63
BC03	H			1										4-7/8		63
BC04	H	E04A1		1-01 *				K1-3			1		N	2-7/8		64
BC04	H	F06S2		1-02 *				K5-5				SOURCE				64
BC04	H			1										2-7/8		64
BC05	H	C06K2		1-01 *				K5-5			1	SOURCE	N	4-5/8		65
BC05	H	D04P2		1-02 *				K1-3								65
BC05	H			1										4-5/8		65
BC06	H	D04V1		1-01 *				K1-3			1		N	2-2/8		66
BC06	H	D06H2		1-02 *				K5-5				SOURCE				66
BC06	H			1										2-2/8		66

RUN NAME	A/P	PIN NAME	ORDER PIN	BAY - ORDER	Q	DRAW OPT	RV	RG	Y	X	Z	REMARKS	NC FLAG	LENGTH	EXCEPTIONS	RUN NUMBER
BC07	H	B06L1		1-01 *				K5-5			1	SOURCE	N	6-7/8		67
BC07	H	D04N1		1-02 *				K1-3								67
BC07	H			1										6-7/8		67
BCON (1+2)	H	A05P2		1-01 *				K3-8			1		N	14-5/8		68
BCON (1+2)	H	F06U2		1-02 *				K5-5				SOURCE				68
BCON (1+2)	H			1										14-5/8		68
BEGIN (1)	L	A07U2		1-01 *				K4-6			2		N	1-2/8		69
BEGIN (1)	L	A06R1		1-02 *				K5-6			1	SOURCE	N	13-3/8		69
BEGIN (1)	L	F05K2		1-03 *				K3-2								69
BEGIN (1)	L			1										14-5/8		69
BEGIN INIT	L	A06C1						K5-7				SOURCE			1-PIN RUN	70
BEGIN SW (0)	H	A06A1						K5-7				SOURCE			1-PIN RUN	71
BERR (0)	H	D06J2		1-01 *				K5-4			1	SOURCE	N	7-3/8		72
BERR (0)	H	F05U2		1-02 *				K3-7								72
BERR (0)	H			1										7-3/8		72
BG BETWEEN	H	F09F1		1-01 *				DD			1		N	2-3/8		73
BG BETWEEN	H	F09V2		1-02 *				DD				SOURCE				73
BG BETWEEN	H			1										2-3/8		73
BG IN	H	D09U2		1-01 *				DD			1	SOURCE	N	3-7/8		74
BG IN	H	F09B1		1-02 *				DD								74
BG IN	H			1										3-7/8		74
BG OUT	H	D09V2		1-01 *				DD			1	SOURCE	N	3-7/8		75
BG OUT	H	F09A1		1-02 *				DD				SOURCE				75
BG OUT	H			1										3-7/8		75
BG4	H	D07E2		1-01 *				K4-6			1	SOURCE	N	2-1/8		76
BG4	H	D09S2		1-02 *				DD								76
BG4	H			1										2-1/8		76
BG5	H	C07V2		1-01 *				K4-6			1	SOURCE	N	3-3/8		77
BG5	H	D09P2		1-02 *				DD								77
BG5	H			1										3-3/8		77
BG6	H	D07F2		1-01 *				K4-6			1	SOURCE	N	8-5/8		78
BG6	H	F03R2		1-02 *				KW-2			2		N	1		78
BG6	H	F03V2		1-03 *				KW-2			1	SOURCE	N	9-3/8		78
BG6	H	D09M2		1-04 *				DD								78
BG6	H			1										19-0/8		78
BG7	H	D07D2		1-01 *				K4-6			1	SOURCE	N	1-5/8		79
BG7	H	D09K2		1-02 *				DD								79
BG7	H			1										1-5/8		79
BGBUS (1)	H	D03E2		1-01 *	2			K2-7			2		N	4-3/8		80
BGBUS (1)	H	E06H1		1-02 *				K5-4			1		N	1		80
BGBUS (1)	H	E07E1		1-03 *				K4-25								80
BGBUS (1)	H			1										5-3/8		80

RUN NAME	A/P	PIN NAME	ORDER PIN	BAY - ORDER	Q	DRAW OPT	RV RG Y	X	Z	REMARKS	NC FLAG	LENGTH	EXCEPTIONS	RUN NUMBER
BIT+CMP+TST	H	A07J2		1-01 *			K4-4		1		N	10-5/8		81
BIT+CMP+TST	H	D05V2		1-02 *			K3-278			SOURCE (K3-8)				81
BIT+CMP+TST	H			1								10-5/8		81
BMUX07	H	E04F1		1-01 *			K1-3		1	SOURCE	N	1-5/8		82
BMUX07	H	E06H2		1-02 *			K5-2							82
BMUX07	H			1								1-5/8		82
BMUX15	H	A04L1		1-01 *			K1-5		1	SOURCE	N	11-7/8		83
BMUX15	H	E06J2		1-02 *			K5-2							83
BMUX15	H			1								11-7/8		83
BOVFL	L	C04C1		1-01 *			K1-7		1	SOURCE	N	10-7/8		84
BOVFL	L	F06S1		1-02 *			K5-4							84
BOVFL	L			1								10-7/8		84
BOVFL STOP	H	B07F1		1-01 *			K4-4		1		N	4-1/8		85
BOVFL STOP	H	C04E1		1-02 *			K1-7			SOURCE				85
BOVFL STOP	H			1								4-1/8		85
BOVFLW (0)	H	D06K2		1-01 *			K5-4		1	SOURCE	N	7-1/8		86
BOVFLW (0)	H	F05V2		1-02 *			K3-7							86
BOVFLW (0)	H			1								7-1/8		86
BPT	L	C06J1		1-01 *			K5-5		1		N	3-3/8		87
BPT	L	D05J2		1-02 *			K3-6			SOURCE				87
BPT	L			1								3-3/8		87
BR INSTR	L	D05N1		1-01 *			K3-5		1		N	6-1/8		88
BR INSTR	L	F06P1		1-02 *			K5-3			SOURCE				88
BR INSTR	L			1								6-1/8		88
BR00 (1)	H	D01A1		1-01 *			KF-2		1		N	1-5/8		89
BR00 (1)	H	D02J1		1-02 *			KE-2346			SOURCE (KE-2)				89
BR00 (1)	H			1								1-5/8		89
BR01 (1)	H	D01B1		1-01 *			KF-2		1		N	2		90
BR01 (1)	H	D02M2		1-02 *			KE-2346			SOURCE (KE-2)				90
BR01 (1)	H			1								2-0/8		90
BR02 (1)	H	D01C1		1-01 *			KF-2		1		N	1-4/8		91
BR02 (1)	H	D02K2		1-02 *			KE-2346			SOURCE (KE-2)				91
BR02 (1)	H			1								1-4/8		91
BR03 (1)	H	D01D1		1-01 *			KF-2		1		N	1-4/8		92
BR03 (1)	H	D02L2		1-02 *			KE-2346			SOURCE (KE-2)				92
BR03 (1)	H			1								1-4/8		92
BR04 (1)	H	B01J1		1-01 *			KF-2		1		N	7-1/8		93
BR04 (1)	H	D02U1		1-02 *			KE-2346			SOURCE (KE-2)				93
BR04 (1)	H			1								7-1/8		93
BR05 (1)	H	B01K1		1-01 *			KF-2		1		N	1-3/8		94
BR05 (1)	H	B02P2		1-02 *			KE-2346			SOURCE (KE-2)				94
BR05 (1)	H			1								1-3/8		94

RUN NAME	A/P	PIN NAME	ORDER PIN	BAY - ORDER	Q	DRAW OPT	RV RG Y	X	Z	REMARKS	NC FLAG	LENGTH	EXCEPTIONS	RUN NUMBER
BR06 (1)	H	B01L2		1-01 *			KF-2		1		N	7-3/8		95
BR06 (1)	H	E02B1		1-02 *			KE-236			SOURCE (KE-2)				95
BR06 (1)	H			1								7-3/8		95
BR07 (1)	H	B01L1		1-01 *			KF-2		1		N	11-7/8		96
BR07 (1)	H	F02P2		1-02 *			KE-236			SOURCE (KE-2)				96
BR07 (1)	H			1								11-7/8		96
BR08 (1)	H	D01E1		1-01 *			KF-2		1		N	7-1/8		97
BR08 (1)	H	F02L2		1-02 *			KE-23			SOURCE (KE-2)				97
BR08 (1)	H			1								7-1/8		97
BR09 (1)	H	D01F1		1-01 *			KF-2		1		N	6-5/8		98
BR09 (1)	H	F02L1		1-02 *			KE-23			SOURCE (KE-2)				98
BR09 (1)	H			1								6-5/8		98
BR10 (1)	H	D01H1		1-01 *			KF-2		1		N	6-5/8		99
BR10 (1)	H	F02M1		1-02 *			KE-23			SOURCE (KE-2)				99
BR10 (1)	H			1								6-5/8		99
BR11 (1)	H	D01J1		1-01 *			KF-2		1		N	6-5/8		100
BR11 (1)	H	F02P1		1-02 *			KE-23			SOURCE (KE-2)				100
BR11 (1)	H			1								6-5/8		100
BR12 (1)	H	B01M2		1-01 *			KF-2		1		N	9-3/8		101
BR12 (1)	H	F02U2		1-02 *			KE-23			SOURCE (KE-2)				101
BR12 (1)	H			1								9-3/8		101
BR13 (1)	H	B01M1		1-01 *			KF-2		1		N	9-3/8		102
BR13 (1)	H	E02U1		1-02 *			KE-23			SOURCE (KE-2)				102
BR13 (1)	H			1								9-3/8		102
BR14 (1)	H	B01N1		1-01 *			KF-2		1		N	4-1/8		103
BR14 (1)	H	C02T2		1-02 *			KE-236			SOURCE (KE-2)				103
BR14 (1)	H			1								4-1/8		103
BR15 (1)	H	B01P1		1-01 *			KF-2		1		N	3-7/8		104
BR15 (1)	H	C02S2		1-02 *			KE-2346			SOURCE (KE-2)				104
BR15 (1)	H			1								3-7/8		104
BRPTR (0)	H	B07M1		1-01 *			K4-5		2	SOURCE	N	3-7/8		105
BRPTR (0)	H	C06U2		1-02 *			K5-4		1		N	7-1/8		105
BRPTR (0)	H	F05D2		1-03 *			K3-7							105
BRPTR (0)	H			1								11-0/8		105
BRQ	L	A01S2		1-01 *			KF-4		1		N	6-1/8		106
BRQ	L	C05D1		1-02 *			K3-47		2		N	5-1/8		106
BRQ	L	D07M2		1-03 *			K4-6			SOURCE				106
BRQ	L			1								11-2/8		106
BRSV (0)	H	B06V2		1-01 *			K5-4		2	SOURCE	N	2-5/8		107
BRSV (0)	H	C07N2		1-02 *			K4-5		1		N	3-3/8		107
BRSV (0)	H	D07N1		1-03 *			K4-2							107
BRSV (0)	H			1								6-0/8		107

RUN NAME	A/P	PIN NAME	ORDER PIN	BAY - ORDER	Q	DRAW OPT	RV RG Y	X	Z	REMARKS	NC FLAG	LENGTH	EXCEPTIONS	RUN NUMBER
BUBC0 (BUT30)	H	B06J2		1-01 *			K5-6		1	SOURCE	N	9-3/8		108
BUBC0 (BUT30)	H	E05R2		1-02 *			K3-2							108
BUBC0 (BUT30)	H			1								9-3/8		108
BUBC1	L	A03J2		1-01 *			K2-2		1		N	9-5/8		109
BUBC1	L	D05P1		1-02 *			K3-2			SOURCE				109
BUBC1	L			1								9-5/8		109
BUBC1 (BUT30)	H	A06U2		1-01 *			K5-6		1	SOURCE	N	9-5/8		110
BUBC1 (BUT30)	H	E05A1		1-02 *			K3-2							110
BUBC1 (BUT30)	H			1								9-5/8		110
BUBC2	L	A03M1		1-01 *			K2-2		1		N	14-5/8		111
BUBC2	L	F05M1		1-02 *			K3-2			SOURCE				111
BUBC2	L			1								14-5/8		111
BUBC2 (BUT30)	H	A06S1		1-01 *			K5-6		1	SOURCE	N	13-7/8		112
BUBC2 (BUT30)	H	F05S2		1-02 *			K3-2							112
BUBC2 (BUT30)	H			1								13-7/8		112
BUBC3	L	A03R1		1-01 *			K2-2		1		N	12-3/8		113
BUBC3	L	E05T2		1-02 *			K3-2			SOURCE				113
BUBC3	L			1								12-3/8		113
BUBC4	L	A03D1		1-01 *			K2-3		1		N	10-5/8		114
BUBC4	L	D05N2		1-02 *			K3-2			SOURCE				114
BUBC4	L			1								10-5/8		114
BUBC5	L	A03D2		1-01 *			K2-3		1		N	9-3/8		115
BUBC5	L	D05F1		1-02 *			K3-2			SOURCE				115
BUBC5	L			1								9-3/8		115
BUBC0 (BUT17_00)	L	A03K2		1-01 *			K2-2		1		N	14-3/8		116
BUBC0 (BUT17_00)	L	F05J1		1-02 *			K3-2			SOURCE				116
BUBC0 (BUT17_00)	L			1								14-3/8		116
BUBC0 (BUT37_00)	L	A03H1		1-01 *			K2-2		1		N	12-7/8		117
BUBC0 (BUT37_00)	L	E05R1		1-02 *			K3-2			SOURCE				117
BUBC0 (BUT37_00)	L			1								12-7/8		117
BUPP0	H	C02M1		1-01 *		2	KE-789		2		N	5-5/8		118
BUPP0	H	A03U2		1-02 *			K2-2		1	SOURCE	N	5-5/8		118
BUPP0	H	C01K2		1-03 *			KF-4		2		N	6-1/8		118
BUPP0	H	D08J2		1-04 *			KT-2		1		N	6-1/8		118
BUPP0	H	E04U2		1-05 *			K1-9		2		N	3-6/8		118
BUPP0	H	F01N2		1-06 *			KM-2							118
BUPP0	H			1								27-2/8		118
BUPP1	H	C02E1		1-01 *		2	KE-789		2		N	5-1/8		119
BUPP1	H	A03S2		1-02 *			K2-2		1	SOURCE	N	6-3/8		119
BUPP1	H	C01M1		1-03 *			KF-4		2		N	6-3/8		119
BUPP1	H	D08H2		1-04 *			KT-2		1		N	5-7/8		119
BUPP1	H	E04T2		1-05 *			K1-9		2		N	2-4/8		119
BUPP1	H	F01D2		1-06 *			KM-2							119
BUPP1	H			1								26-2/8		119

RUN NAME	A/P	PIN NAME	ORDER PIN	BAY - ORDER	Q	DRAW OPT	RV RG Y	X	Z	REMARKS	NC FLAG	LENGTH	EXCEPTIONS	RUN NUMBER
BUPP2	H	B02S1		1-01 *		2	KE-789		2		N	4-1/8		120
BUPP2	H	A03P2		1-02 *			K2-2		1	SOURCE	N	6-3/8		120
BUPP2	H	C01L1		1-03 *			KF-4		2		N	6-3/8		120
BUPP2	H	D08F2		1-04 *			KT-2		1		N	5-3/8		120
BUPP2	H	E04M2		1-05 *			K1-9		2		N	3-7/8		120
BUPP2	H	F01H2		1-06 *			KM-2							120
BUPP2	H			1								26-1/8		120
BUPP3	H	D02H1		1-01 *		2	KE-789		2		N	8-7/8		121
BUPP3	H	A03L2		1-02 *			K2-2		1	SOURCE	N	5-7/8		121
BUPP3	H	C01D2		1-03 *			KF-4		2		N	5-2/8		121
BUPP3	H	D08K2		1-04 *			KT-2		1		N	4		121
BUPP3	H	E04K2		1-05 *			K1-9		2		N	5-5/8		121
BUPP3	H	F01S1		1-06 *			KM-2							121
BUPP3	H			1								29-5/8		121
BUPP4	H	B03R2		1-01 *			K2-3		2	SOURCE	N	2-3/8		122
BUPP4	H	C01E1		1-02 *			KF-4		1		N	6		122
BUPP4	H	D08L2		1-03 *			KT-2		2		N	5		122
BUPP4	H	E04R1		1-04 *			K1-9		1		N	4-1/8		122
BUPP4	H	F01M2	D02K1	1-05 *			KM-2		2		N	6-1/8		122
BUPP4	H	D02K1		1-06 *			KE-789							122
BUPP4	H			1								23-5/8		122
BUPP5	H	B03P2	C01E2	1-01 *			K2-3		2	SOURCE	N	2-5/8		123
BUPP5	H	C01E2		1-02 *			KF-4		1		N	5-3/8		123
BUPP5	H	D08M2		1-03 *			KT-2		2		N	3-5/8		123
BUPP5	H	E04K1		1-04 *			K1-9		1		N	3-7/8		123
BUPP5	H	F01F2	F02E2	1-05 *			KM-2		2		N	0-5/8		123
BUPP5	H	F02E2		1-06 *			KE-789							123
BUPP5	H			1								16-1/8		123
BUPP6	H	B03M2		1-01 *			K2-3		2	SOURCE	N	3-3/8		124
BUPP6	H	C01F1		1-02 *			KF-4		1		N	5-5/8		124
BUPP6	H	D08N2		1-03 *			KT-2		2		N	2-7/8		124
BUPP6	H	D04T2		1-04 *			K1-9		1		N	7-1/8		124
BUPP6	H	F01R1	F02T2	1-05 *			KM-2		2		N	1-3/8		124
BUPP6	H	F02T2		1-06 *			KE-789							124
BUPP6	H			1								20-3/8		124
BUPP7	H	B03J2	C01D1	1-01 *			K2-3		2	SOURCE	N	3-4/8		125
BUPP7	H	C01D1		1-02 *			KF-4		1		N	6-1/8		125
BUPP7	H	D08R1		1-03 *			KT-2		2		N	3-4/8		125
BUPP7	H	E04N1		1-04 *			K1-9		1		N	4-1/8		125
BUPP7	H	F01K1	F02D2	1-05 *			KM-2		2		N	1-5/8		125
BUPP7	H	F02D2		1-06 *			KE-789							125
BUPP7	H			1								18-7/8		125
BUPP8	H	A01C1		1-01 *			KF-4		2		N	4-5/8		126
BUPP8	H	B03E2		1-02 *			K2-3		1	SOURCE	N	3-7/8		126
BUPP8	H	C04K2		1-03 *			K1-9		2		N	5-3/8		126
BUPP8	H	D08N1		1-04 *			KT-2		1		N	9-3/8		126
BUPP8	H	F01S2		1-05 *			KM-2							126
BUPP8	H			1								23-2/8		126

RUN NAME	A/P	PIN NAME	ORDER PIN	BAY - ORDER	Q	DRAW OPT	RV	RG	Y	X	Z	REMARKS	NC FLAG	LENGTH	EXCEPTIONS	RUN NUMBER
BUS (1)	H	A07M1					K4-4					SOURCE			1-PIN RUN	127
BUS A00	L	B09H2		1-01 *			DD				1	SOURCE	N	8-2/8		128
BUS A00	L	E09H2		1-02 *			DD				2		N	5-7/8		128
BUS A00	L	F04P2		1-03 *			K1-6					SOURCE				128
BUS A00	L			1										14-1/8		128
BUS A01	L	B09H1		1-01 *			DD				1	SOURCE	N	8-2/8		129
BUS A01	L	E09H1		1-02 *			DD				2		N	4-6/8		129
BUS A01	L	F03E1		1-03 *			KW-2				1		N	1-6/8		129
BUS A01	L	F04N2		1-04 *			K1-6					SOURCE				129
BUS A01	L			1										14-6/8		129
BUS A02	L	B09J2	E09F1	1-01 *			DD				1	SOURCE	N	8-1/8		130
BUS A02	L	E09F1		1-02 *			DD				2		N	5		130
BUS A02	L	F03L2		1-03 *			KW-2				1		N	0-5/8		130
BUS A02	L	F04M2		1-04 *			K1-6					SOURCE				130
BUS A02	L			1										13-6/8		130
BUS A03	L	B09J1		1-01 *			DD				1	SOURCE	N	9-5/8		131
BUS A03	L	E09V2		1-02 *			DD				2		N	3-7/8		131
BUS A03	L	F04R2		1-03 *			K1-6				1	SOURCE	N	1-5/8		131
BUS A03	L	F03M1		1-04 *			KW-2									131
BUS A03	L			1										15-1/8		131
BUS A04	L	B09K2		1-01 *			DD				2	SOURCE	N	5-2/8		132
BUS A04	L	C04S2		1-02 *			K1-6				1	SOURCE	N	7-7/8		132
BUS A04	L	F03J2		1-03 *			KW-2				2		N	4-7/8		132
BUS A04	L	E09U2		1-04 *			DD									132
BUS A04	L			1										18-0/8		132
BUS A05	L	B09K1		1-01 *			DD				2	SOURCE	N	5-2/8		133
BUS A05	L	C04S1	F03J1	1-02 *			K1-6				1	SOURCE	N	7-7/8		133
BUS A05	L	F03J1		1-03 *			KW-2				2		N	4-7/8		133
BUS A05	L	E09V1		1-04 *			DD									133
BUS A05	L			1										18-0/8		133
BUS A06	L	A08S1		1-01 *			KT-4				1	SOURCE	N	3-3/8		134
BUS A06	L	B09L2		1-02 *			DD				2	SOURCE	N	5-5/8		134
BUS A06	L	C04V1	F03K1	1-03 *			K1-6				1	SOURCE	N	7-7/8		134
BUS A06	L	F03K1		1-04 *			KW-2				2		N	5-1/8		134
BUS A06	L	F09U1		1-05 *			DD									134
BUS A06	L			1										22-0/8		134
BUS A07	L	A08R2		1-01 *			KT-4				2	SOURCE	N	2-7/8		135
BUS A07	L	B09L1		1-02 *			DD				1	SOURCE	N	7-1/8		135
BUS A07	L	D04A1		1-03 *			K1-6				2	SOURCE	N	6-7/8		135
BUS A07	L	F03K2		1-04 *			KW-2				1		N	5		135
BUS A07	L	F09P2		1-05 *			DD									135
BUS A07	L			1										21-7/8		135

RUN NAME	A/P	PIN NAME	ORDER PIN	BAY - ORDER	Q	DRAW OPT	RV	RG	Y	X	Z	REMARKS	NC FLAG	LENGTH	EXCEPTIONS	RUN NUMBER
BUS A08	L	A06P1		1-01 *			KT-4				1	SOURCE	N	3-5/8		136
BUS A08	L	B09M2		1-02 *			DD				2	SOURCE	N	4-1/8		136
BUS A08	L	C04J1	E09N2	1-03 *			K1-6				1	SOURCE	N	8-7/8		136
BUS A08	L	E09N2		1-04 *			DD				2		N	5-2/8		136
BUS A08	L	F03L1		1-05 *			KW-2									136
BUS A08	L			1										21-7/8		136
BUS A09	L	A08N2		1-01 *			KT-4				1	SOURCE	N	3-1/8		137
BUS A09	L	B09M1		1-02 *			DD				2	SOURCE	N	3-5/8		137
BUS A09	L	C04F2	E09R1	1-03 *			K1-6				1	SOURCE	N	9-1/8		137
BUS A09	L	E09R1		1-04 *			DD				2		N	4-4/8		137
BUS A09	L	F03M2		1-05 *			KW-2									137
BUS A09	L			1										20-3/8		137
BUS A10	L	B09N2		1-01 *			DD				1	SOURCE	N	1-7/8		138
BUS A10	L	B08D2		1-02 *			KT-4				2	SOURCE	N	4-4/8		138
BUS A10	L	C04H1		1-03 *			K1-6				1	SOURCE	N	8-1/8		138
BUS A10	L	F03A1		1-04 *			KW-2				2		N	4-5/8		138
BUS A10	L	E09P1		1-05 *			DD									138
BUS A10	L			1										19-1/8		138
BUS A11	L	B08C1		1-01 *			KT-4				1	SOURCE	N	2		139
BUS A11	L	B09N1		1-02 *			DD				2	SOURCE	N	3-7/8		139
BUS A11	L	C04L1		1-03 *			K1-6				1	SOURCE	N	7-7/8		139
BUS A11	L	F03R1		1-04 *			KW-2				2		N	5-1/8		139
BUS A11	L	E09L1		1-05 *			DD									139
BUS A11	L			1										18-7/8		139
BUS A12	L	A04N2		1-01 *			K1-6				1	SOURCE	N	2-5/8		140
BUS A12	L	A08U1		1-02 *			KT-4				2	SOURCE	N	3-3/8		140
BUS A12	L	B09P2		1-03 *			DD				1	SOURCE	N	7-1/8		140
BUS A12	L	E09C1		1-04 *			DD				2		N	4-5/8		140
BUS A12	L	F03C1		1-05 *			KW-2									140
BUS A12	L			1										17-6/8		140
BUS A13	L	A04R2		1-01 *	1		K1-6				1	SOURCE	N	2-6/8		141
BUS A13	L	B08A1		1-02 *			KT-4				2	SOURCE	N	2-3/8		141
BUS A13	L	B09P1		1-03 *			DD				1	SOURCE	N	7-7/8		141
BUS A13	L	E09K2		1-04 *			DD				2		N	5-3/8		141
BUS A13	L	F03D1		1-05 *			KW-2									141
BUS A13	L			1										18-3/8		141
BUS A14	L	A04L2		1-01 *			K1-6				1	SOURCE	N	5-2/8		142
BUS A14	L	B09R2		1-02 *			DD				2	SOURCE	N	1		142
BUS A14	L	B08T2	E09K1	1-03 *			KT-4				1	SOURCE	N	7-3/8		142
BUS A14	L	E09K1		1-04 *			DD				2		N	4-3/8		142
BUS A14	L	F03E2		1-05 *			KW-2									142
BUS A14	L			1										18-0/8		142
BUS A15	L	A04J2		1-01 *			K1-6				1	SOURCE	N	6-1/8		143
BUS A15	L	B09R1		1-02 *			DD				2	SOURCE	N	1-7/8		143
BUS A15	L	C08B1	E09D2	1-03 *			KT-4				1	SOURCE	N	6-5/8		143
BUS A15	L	E09D2		1-04 *			DD				2		N	4-6/8		143
BUS A15	L	F03F2		1-05 *			KW-2									143
BUS A15	L			1										19-3/8		143

RUN NAME	A/P	PIN NAME	ORDER PIN	BAY - ORDER	Q	DRAW OPT	RV RG Y	X	Z	REMARKS	NC FLAG	LENGTH	EXCEPTIONS	RUN NUMBER
BUS A16	L	A04S1		1-01 *	2		K1-6		2	SOURCE	N	4-3/8		144
BUS A16	L	B09S2		1-02 *			DD		1	SOURCE	N	0-5/8		144
BUS A16	L	B08V2	E09E2	1-03 *			KT-4		2	SOURCE	N	6-7/8		144
BUS A16	L	E09E2		1-04 *			DD		1		N	4-6/8		144
BUS A16	L	F03H2		1-05 *			KW-2							144
BUS A16	L			1								16-5/8		144
BUS A17	L	A04R1		1-01 *	1		K1-6		1	SOURCE	N	4-3/8		145
BUS A17	L	B08P1		1-02 *			KT-4		2	SOURCE	N	1		145
BUS A17	L	B09S1		1-03 *			DD		1	SOURCE	N	6-7/8		145
BUS A17	L	E09D1		1-04 *			DD		2		N	4-3/8		145
BUS A17	L	F03D2		1-05 *			KW-2							145
BUS A17	L			1								16-5/8		145
BUS AC LO	L	B06D2		1-01 *			K5-8		1		N	0-1/8		146
BUS AC LO	L	B06E2		1-02 *	H		K5-8		2	SOURCE TWP		1-7/8		146
BUS AC LO	L	B09F1		1-03 *			DD			SOURCE,ETCH TO CON				146
BUS AC LO	L			1								2-0/8		146
BUS BRSY	L	A09P2	C07M2	1-01 *	H				2	SOURCE TWP		6-3/8		147
BUS BRSY	L	C07M2		1-02 *	H		K4-5		1	SOURCE TWP		8-3/8		147
BUS BRSY	L	F09D1		1-03 *	H		DD		2	SOURCE TWP		4-5/8		147
BUS BRSY	L	F03T2		1-04 *			KW-2			SOURCE				147
BUS BRSY	L			1								19-3/8		147
BUS BG4	H	B09E2		1-01 *	H				1	TWP		7-1/8		148
BUS BG4	H	D09T2		1-02 *			DD			SOURCE				148
BUS BG4	H			1								7-1/8		148
BUS BG5	H	B09R1		1-01 *	H				1	TWP		7-3/8		149
BUS BG5	H	D09R2		1-02 *			DD			SOURCE				149
BUS BG5	H			1								7-3/8		149
BUS BG6	H	B09A1		1-01 *	H				1	TWP		7-3/8		150
BUS BG6	H	D09N2		1-02 *			DD			SOURCE				150
BUS BG6	H			1								7-3/8		150
BUS BG7	H	A09V1		1-01 *	H				1	TWP		7-5/8		151
BUS BG7	H	D09L2		1-02 *			DD			SOURCE				151
BUS BG7	H			1								7-5/8		151
BUS BR4	L	B09D2	C07U2	1-01 *	H				1	SOURCE TWP		5-5/8		152
BUS BR4	L	C07U2		1-02 *	H		K4-6		2	SOURCE TWP		2-5/8		152
BUS BR4	L	D09H2		1-03 *			DD							152
BUS BR4	L			1								8-2/8		152
BUS BR5	L	B09C1	C07T2	1-01 *	H				1	SOURCE TWP		5-1/8		153
BUS BR5	L	C07T2		1-02 *	H		K4-6		2	SOURCE TWP		2-5/8		153
BUS BR5	L	D09F2		1-03 *			DD							153
BUS BR5	L			1								7-6/8		153
BUS BR6	L	A09U2	C07S2	1-01 *	H				1	SOURCE TWP		6-3/8		154
BUS BR6	L	C07S2		1-02 *	H		K4-6		2	SOURCE TWP		2-5/8		154
BUS BR6	L	D09E2		1-03 *	H		DD		1	SOURCE TWP		10-3/8		154
BUS BR6	L	F03U1		1-04 *			KW-2			SOURCE				154
BUS BR6	L			1								19-3/8		154

RUN NAME	A/P	PIN NAME	ORDER PIN	BAY - ORDER	Q	DRAW OPT	RV RG Y	X	Z	REMARKS	NC FLAG	LENGTH	EXCEPTIONS	RUN NUMBER
BUS BR7	L	A09T2	C07R2	1-01 *	H				1	SOURCE TWP		6-3/8		155
BUS BR7	L	C07R2		1-02 *	H		K4-6		2	TWP		2-5/8		155
BUS BR7	L	D09D2		1-03 *			DD							155
BUS BR7	L			1								9-0/8		155
BUS C0	L	A07H1		1-01 *	H		K4-4		2	SOURCE TWP		5-5/8		156
BUS C0	L	B09U2		1-02 *	H				1	SOURCE TWP		7-1/8		156
BUS C0	L	E09J2		1-03 *			DD							156
BUS C0	L			1								12-6/8		156
BUS C1	L	A07E2		1-01 *	H		K4-4		2	SOURCE TWP		5-5/8		157
BUS C1	L	B09T2		1-02 *	H				1	SOURCE TWP		7		157
BUS C1	L	E09F2		1-03 *	H		DD		2	TWP		5-2/8		157
BUS C1	L	F03N1		1-04 *			KW-2							157
BUS C1	L			1								17-7/8		157
BUS D00	L	A09C1		1-01 *					2	SOURCE	N	1-3/8		158
BUS D00	L	A08K1		1-02 *			KT-8		1	SOURCE	N	7-1/8		158
BUS D00	L	C09S2		1-03 *			DD		2	SOURCE	N	4-3/8		158
BUS D00	L	D04J1		1-04 *			K1-29		1	SOURCE (K1-29)	N	6-7/8	BIN-COD ER	158
BUS D00	L	F06L1		1-05 *			K5-2			SOURCE				158
BUS D00	L			1								19-6/8		158
BUS D01	L	A08F1		1-01 *			KT-8		1	SOURCE	N	1-3/8		159
BUS D01	L	A09D2		1-02 *					2	SOURCE	N	7		159
BUS D01	L	C09R2		1-03 *			DD		1	SOURCE	N	9-7/8		159
BUS D01	L	F06P2		1-04 *			K5-2		2	SOURCE	N	1-7/8		159
BUS D01	L	F04U2		1-05 *			K1-29			SOURCE (K1-29)				159
BUS D01	L			1								20-1/8		159
BUS D02	L	A09D1		1-01 *					2	SOURCE	N	1-3/8		160
BUS D02	L	A08L2		1-02 *			KT-8		1	SOURCE	N	6-7/8		160
BUS D02	L	C09U2		1-03 *			DD		2	SOURCE	N	7		160
BUS D02	L	E09E2		1-04 *			DD		1	SOURCE	N	2-5/8		160
BUS D02	L	F06K1		1-05 *			K5-2		2	SOURCE	N	1-4/8		160
BUS D02	L	F04S2		1-06 *			K1-29			SOURCE (K1-29)				160
BUS D02	L			1								19-3/8		160
BUS D03	L	A08H1		1-01 *			KT-8		2	SOURCE	N	1-3/8		161
BUS D03	L	A09E2		1-02 *					1	SOURCE	N	7-1/8		161
BUS D03	L	C09T2		1-03 *			DD		2	SOURCE	N	7-7/8		161
BUS D03	L	F09L1		1-04 *			DD		1	SOURCE	N	2-1/8		161
BUS D03	L	F06J1		1-05 *			K5-2		2	SOURCE	N	1-6/8		161
BUS D03	L	F04T2		1-06 *			K1-29			SOURCE (K1-29)				161
BUS D03	L			1								20-2/8		161
BUS D04	L	A09E1		1-01 *					2	SOURCE	N	3-5/8		162
BUS D04	L	B08F1		1-02 *			KT-8		1	SOURCE	N	4-3/8		162
BUS D04	L	C09N2		1-03 *			DD		2	SOURCE	N	4-1/8		162
BUS D04	L	D04M2		1-04 *			K1-39		1	SOURCE (K1-39)	N	5-5/8	BIN-COD ER	162
BUS D04	L	F06E1		1-05 *			K5-2		2	SOURCE	N	3-1/8		162
BUS D04	L	F09N2		1-06 *			DD			SOURCE				162
BUS D04	L			1								20-7/8		162

RUN NAME	A/P	PIN NAME	ORDER PIN	BAY - ORDER	Q	DRAW OPT	RV RG Y	X	Z	REMARKS	NC FLAG	LENGTH	EXCEPTIONS	RUN NUMBER
BUS D05	L	A09F2		1-01 *					1	SOURCE	N	4-1/8		163
BUS D05	L	B08H1		1-02 *			KT-8		2	SOURCE	N	4-3/8		163
BUS D05	L	C09P2		1-03 *			DD		1	SOURCE	N	6-7/8		163
BUS D05	L	E04C1		1-04 *			K1-39		2	SOURCE (K1-39)	N	4-3/8	BIN-COD ER	163
BUS D05	L	F06D1		1-05 *			K5-2		1	SOURCE	N	2-1/8		163
BUS D05	L	F09F1		1-06 *			DD			SOURCE				163
BUS D05	L			1								21-7/8		163
BUS D06	L	A09F1		1-01 *					2	SOURCE	N	3-5/8		164
BUS D06	L	B08J2		1-02 *			KT-8		1	SOURCE	N	4-5/8		164
BUS D06	L	C09V2		1-03 *			DD		2	SOURCE	N	4-3/8		164
BUS D06	L	D04R1		1-04 *			K1-39		1	SOURCE (K1-39)	N	6-1/8	BIN-COD ER	164
BUS D06	L	F03P1		1-05 *			KW-2		2	SOURCE	N	2-4/8		164
BUS D06	L	F06C1		1-06 *			K5-2		1		N	2-5/8		164
BUS D06	L	F09F2		1-07 *			DD			SOURCE				164
BUS D06	L			1								23-7/8		164
BUS D07	L	A09H2		1-01 *					1	SOURCE	N	3-5/8		165
BUS D07	L	B08H2		1-02 *			KT-8		2	SOURCE	N	3-7/8		165
BUS D07	L	C09M2		1-03 *			DD		1	SOURCE	N	7-1/8		165
BUS D07	L	E04B1		1-04 *			K1-39		2	SOURCE (K1-39)	N	5-3/8	BIN-COD ER	165
BUS D07	L	F03S1		1-05 *			KW-2		1	SOURCE	N	3-3/8		165
BUS D07	L	F06F2		1-06 *			K5-2		2	SOURCE	N	1-5/8		165
BUS D07	L	F09H1		1-07 *			DD			SOURCE				165
BUS D07	L			1								25-0/8		165
BUS D08	L	A09H1		1-01 *					1	SOURCE	N	5-5/8		166
BUS D08	L	C08D1		1-02 *			KT-9		2	SOURCE	N	1-4/8		166
BUS D08	L	C09L2		1-03 *			DD		1	SOURCE	N	3-5/8		166
BUS D08	L	C04P1		1-04 *			K1-49		2	SOURCE (K1-49)	N	5-1/8	BIN-COD ER	166
BUS D08	L	E03E1		1-05 *			KJ-2		1	SOURCE	N	4-7/8		166
BUS D08	L	F09K1		1-06 *			DD			SOURCE				166
BUS D08	L			1								20-6/8		166
BUS D09	L	A09J2		1-01 *					2	SOURCE	N	4-3/8		167
BUS D09	L	B08P2		1-02 *			KT-9		1	SOURCE	N	2-7/8		167
BUS D09	L	C09K2		1-03 *			DD		2	SOURCE	N	3-5/8		167
BUS D09	L	C04R1		1-04 *			K1-49		1	SOURCE (K1-49)	N	5-1/8	BIN-COD ER	167
BUS D09	L	E03F1		1-05 *			KJ-2			SOURCE				167
BUS D09	L			1								16-0/8		167
BUS D10	L	A09J1		1-01 *					2	SOURCE	N	4-1/8		168
BUS D10	L	B08M1		1-02 *			KT-9		1	SOURCE	N	3-3/8		168
BUS D10	L	C09J2		1-03 *			DD		2	SOURCE	N	3-5/8		168
BUS D10	L	C04N1		1-04 *			K1-49		1	SOURCE (K1-49)	N	5-3/8	BIN-COD ER	168
BUS D10	L	E03J2		1-05 *			KJ-2			SOURCE				168
BUS D10	L			1								16-4/8		168
BUS D11	L	A09K2		1-01 *					2	SOURCE	N	4-3/8		169
BUS D11	L	B08R1		1-02 *			KT-9		1	SOURCE	N	2-3/8		169
BUS D11	L	C09H1		1-03 *			DD		2	SOURCE	N	2-6/8		169
BUS D11	L	C04H2		1-04 *			K1-49		1	SOURCE (K1-49)	N	6-1/8	BIN-COD ER	169
BUS D11	L	E03H2		1-05 *			KJ-2			SOURCE				169
BUS D11	L			1								15-5/8		169

RUN NAME	A/P	PIN NAME	ORDER PIN	BAY - ORDER	Q	DRAW OPT	RV RG Y	X	Z	REMARKS	NC FLAG	LENGTH	EXCEPTIONS	RUN NUMBER
BUS D12	L	A09K1		1-01 *	2				2	SOURCE	N	3-7/8		170
BUS D12	L	B04B1		1-02 *			K1-59		1	SOURCE (K1-59)	N	4-7/8	BIN-COD ER	170
BUS D12	L	C09H2		1-03 *			DD		2	SOURCE	N	1-4/8		170
BUS D12	L	C08P1		1-04 *			KT-29		1	SOURCE	N	7-7/8		170
BUS D12	L	F03P2		1-05 *			KJ-2			SOURCE				170
BUS D12	L			1								18-1/8		170
BUS D13	L	A09L2		1-01 *					2	SOURCE	N	4-1/8		171
BUS D13	L	B04E2		1-02 *			K1-59		1	SOURCE (K1-59)	N	4-1/8	BIN-COD ER	171
BUS D13	L	C09F2		1-03 *			DD		2	SOURCE	N	1-3/8		171
BUS D13	L	C08H1		1-04 *			KT-29		1	SOURCE	N	8-1/8		171
BUS D13	L	E03K2		1-05 *			KJ-2			SOURCE				171
BUS D13	L			1								17-6/8		171
BUS D14	L	A09L1		1-01 *	2				2	SOURCE	N	4-3/8		172
BUS D14	L	B04C1		1-02 *			K1-59		1	SOURCE (K1-59)	N	4-3/8	BIN-COD ER	172
BUS D14	L	C09E2		1-03 *			DD		2	SOURCE	N	1-3/8		172
BUS D14	L	C08C1		1-04 *			KT-29		1	SOURCE	N	9-3/8		172
BUS D14	L	E03S2		1-05 *			KJ-2			SOURCE				172
BUS D14	L			1								19-4/8		172
BUS D15	L	A09M2		1-01 *					2		N	4-5/8		173
BUS D15	L	B04F1		1-02 *			K1-59		1	SOURCE (K1-59)	N	4-4/8	BIN-COD ER	173
BUS D15	L	C09D2		1-03 *			DD		2	SOURCE	N	1-3/8		173
BUS D15	L	C08E1		1-04 *			KT-29		1	SOURCE	N	8-7/8		173
BUS D15	L	E03P2		1-05 *			KJ-2			SOURCE				173
BUS D15	L			1								19-3/8		173
BUS DC LO	L	B06C1		1-01 *	H		K5-8		1	SOURCE TWP		2-5/8		174
BUS DC LO	L	B09F2	C09N1	1-02 *					2	SOURCE,ETCH TO COM	N	3-7/8	BIN-COD ER	174
BUS DC LO	L	C09N1		1-03 *										174
BUS DC LO	L			1								6-4/8		174
BUS FM BA	H	A08S2		1-01 *	2		KT-4		2		N	2-7/8		175
BUS FM BA	H	B07L2		1-02 *			K4-5		1	SOURCE	N	6-7/8		175
BUS FM BA	H	D04J2		1-03 *			K1-6							175
BUS FM BA	H			1								9-6/8		175
BUS FM D	H	B07N1		1-01 *			K4-5		1	SOURCE	N	12-7/8		176
BUS FM D	H	F04V2		1-02 *			K1- 2345							176
BUS FM D	H			1								12-7/8		176
BUS FM PS	L	B07J2		1-01 *			K4-6		2	SOURCE	N	5-3/8		177
BUS FM PS	L	D08D1		1-02 *			KT-2		1		N	6-7/8		177
BUS FM PS	L	F06F1		1-03 *			K5-2							177
BUS FM PS	L			1								12-2/8		177
BUS FM SR	H	B04F1		1-01 *			K1-9		1		N	9-5/8		178
BUS FM SR	H	E07D2		1-02 *			K4-6			SOURCE				178
BUS FM SR	H			1								9-5/8		178

RUN NAME	A/P	PIN NAME	ORDER PIN	BAY - ORDER	Q	DRAW OPT	RV	RG	Y	X	Z	REMARKS	NC LENGTH FLAG	EXCEPTIONS	RUN NUMBER
BUS INIT	L	A09A1		1-01 *	H						2	TWP	4-7/8		179
BUS INIT	L	B06D1		1-02 *	H		K5-8				1	SOURCE TWP	3-5/8		179
BUS INIT	L	C07H1		1-03 *	H		K4-5				2	TWP	4-5/8		179
BUS INIT	L	D09L1		1-04 *	H		DD				1	TWP	8-7/8		179
BUS INIT	L	F03P2		1-05 *			KW-2								179
BUS INIT	L			1									22-0/8		179
BUS INTR	L	A07A1	A09B1	1-01 *	H		K4-4				2	TWP	1-5/8		180
BUS INTR	L	A09B1		1-02 *	H						1	SOURCE TWP	14-7/8		180
BUS INTR	L	F09M1		1-03 *	H		DD				2	SOURCE TWP	3-7/8		180
BUS INTR	L	F03U2		1-04 *			KW-2					SOURCE			180
BUS INTR	L			1									20-3/8		180
BUS MSYN	L	A07D1	B09V1	1-01 *	H		K4-4				2	SOURCE TWP	5-7/8		181
BUS MSYN	L	B09V1		1-02 *	H						1	SOURCE TWP	6-5/8		181
BUS MSYN	L	F09E1		1-03 *	H		DD				2	TWP	4-4/8		181
BUS MSYN	L	F03F1		1-04 *			KW-2								181
BUS MSYN	L			1									17-0/8		181
BUS NPG	H	A09U1		1-01 *	H						1	TWP	5-7/8		182
BUS NPG	H	C07P2		1-02 *			K4-5					SOURCE			182
BUS NPG	H			1									5-7/8		182
BUS NPR	L	A09S2		1-01 *	H						2	SOURCE TWP	5-1/8		183
BUS NPR	L	C07D2		1-02 *	H		K4-5				1	TWP	9-5/8		183
BUS NPR	L	F09J1		1-03 *			DD								183
BUS NPR	L			1									14-6/8		183
BUS PA	L	A09M1		1-01 *	H						1	SOURCE TWP	1-3/8		184
BUS PA	L	A07L1		1-02 *			K4-3								184
BUS PA	L			1									1-3/8		184
BUS PB	L	A09N2		1-01 *	H						1	SOURCE TWP	1-6/8		185
BUS PB	L	A07F2		1-02 *			K4-3								185
BUS PB	L			1									1-6/8		185
BUS RD FM PS	H	C08F2		1-01 *			KT-2				1		N 8-7/8		186
BUS RD FM PS	H	F06B2		1-02 *			K5-2								186
BUS RD FM PS	H			1									8-7/8		186
BUS RD00	L	C01L2		1-01 *			KF-3				1	SOURCE	N 6-1/8		187
BUS RD00	L	E02L2		1-02 *			KE-3				2	SOURCE	N 4-5/8		187
BUS RD00	L	F04U1		1-03 *			K1-28				1	SOURCE (K1-8)	N 1-6/8		187
BUS RD00	L	F06M1		1-04 *			K5-2				2	SOURCE	N 2-1/8		187
BUS RD00	L	F08J2		1-05 *			KT-7					SOURCE			187
BUS RD00	L			1									14-5/8		187
BUS RD01	L	C01J2		1-01 *			KF-3				1	SOURCE	N 6-1/8		188
BUS RD01	L	E02L1		1-02 *			KE-3				2	SOURCE	N 4-5/8		188
BUS RD01	L	F04S1		1-03 *			K1-28				1	SOURCE (K1-8)	N 2-1/8		188
BUS RD01	L	F06N2		1-04 *			K5-2				2	SOURCE	N 1-3/8		188
BUS RD01	L	F08R1		1-05 *			KT-7					SOURCE			188
BUS RD01	L			1									14-2/8		188

RUN NAME	A/P	PIN NAME	ORDER PIN	BAY - ORDER	Q	DRAW OPT	RV	RG	Y	X	Z	REMARKS	NC LENGTH FLAG	EXCEPTIONS	RUN NUMBER
BUS RD02	L	B01U1		1-01 *			KF-3				1	SOURCE	N 8-1/8		189
BUS RD02	L	E02M2		1-02 *			KE-3				2	SOURCE	N 4-3/8		189
BUS RD02	L	F04R1		1-03 *			K1-28				1	SOURCE (K1-8)	N 1-7/8		189
BUS RD02	L	F06M2		1-04 *			K5-2				2	SOURCE	N 1-7/8		189
BUS RD02	L	F08D2		1-05 *			KT-7					SOURCE			189
BUS RD02	L			1									16-2/8		189
BUS RD03	L	B01P2		1-01 *			KF-3				1	SOURCE	N 8-5/8		190
BUS RD03	L	E02N2		1-02 *			KE-3				2	SOURCE	N 3-7/8		190
BUS RD03	L	F04P1		1-03 *			K1-28				1	SOURCE (K1-8)	N 2-1/8		190
BUS RD03	L	F06L2		1-04 *			K5-2				2	SOURCE	N 1-7/8		190
BUS RD03	L	F08F2		1-05 *			KT-7					SOURCE			190
BUS RD03	L			1									16-4/8		190
BUS RD04	L	B01A1		1-01 *			KF-3				2	SOURCE	N 6-1/8		191
BUS RD04	L	C04N2		1-02 *			K1-38				1	SOURCE (K1-8)	N 8-3/8		191
BUS RD04	L	F02A1		1-03 *			KE-3				2	SOURCE	N 3-4/8		191
BUS RD04	L	F08A1		1-04 *			KT-7				1	SOURCE	N 1-6/8		191
BUS RD04	L	F06K2		1-05 *			K5-2					SOURCE			191
BUS RD04	L			1									19-6/8		191
BUS RD05	L	A01R1		1-01 *			KF-3				2	SOURCE	N 7-1/8		192
BUS RD05	L	C04P2		1-02 *			K1-38				1	SOURCE (K1-8)	N 8-3/8		192
BUS RD05	L	F02C1		1-03 *			KE-3				2	SOURCE	N 3-1/8		192
BUS RD05	L	F06H2		1-04 *			K5-2				1	SOURCE	N 1-3/8		192
BUS RD05	L	F08F1		1-05 *			KT-7					SOURCE			192
BUS RD05	L			1									20-0/8		192
BUS RD06	L	A01E2		1-01 *			KF-3				2	SOURCE	N 7-5/8		193
BUS RD06	L	C04J2		1-02 *			K1-38				1	SOURCE (K1-8)	N 9-3/8		193
BUS RD06	L	F08B1		1-03 *			KT-7				2	SOURCE	N 1-3/8		193
BUS RD06	L	F06D2		1-04 *			K5-2				1	SOURCE	N 3-1/8		193
BUS RD06	L	F02H1		1-05 *			KE-3					SOURCE			193
BUS RD06	L			1									21-4/8		193
BUS RD07	L	A01B1		1-01 *			KF-3				2	SOURCE	N 8-3/8		194
BUS RD07	L	C04M2		1-02 *			K1-38				1	SOURCE (K1-8)	N 8-5/8		194
BUS RD07	L	F02F2		1-03 *			KE-3				2	SOURCE	N 2-3/8		194
BUS RD07	L	F06E2		1-04 *			K5-2				1	SOURCE	N 1-7/8		194
BUS RD07	L	F08K2		1-05 *			KT-7					SOURCE			194
BUS RD07	L			1									21-2/8		194
BUS RD08	L	C04B1		1-01 *			K1-48				2	SOURCE (K1-8)	N 2-2/8		195
BUS RD08	L	C01M2		1-02 *			KF-3				1	SOURCE	N 9-1/8		195
BUS RD08	L	F02S1		1-03 *			KE-3				2	SOURCE	N 4-7/8		195
BUS RD08	L	F08C1		1-04 *			KT-7					SOURCE			195
BUS RD08	L			1									16-2/8		195
BUS RD09	L	C04A1		1-01 *			K1-48				2	SOURCE (K1-8)	N 2-5/8		196
BUS RD09	L	C01K1		1-02 *			KF-3				1	SOURCE	N 9-7/8		196
BUS RD09	L	F02R2		1-03 *			KE-3				2	SOURCE	N 4-3/8		196
BUS RD09	L	F08D1		1-04 *			KT-7					SOURCE			196
BUS RD09	L			1									16-7/8		196

RUN NAME	A/P	PIN NAME	ORDER PIN	BAY - ORDER	Q	DRAW OPT	RV RG Y	X	Z	REMARKS	NC FLAG	LENGTH	EXCEPTIONS	RUN NUMBER
BUS RD10	L	B01V1		1-01 *			KF-3		2	SOURCE	N	2		197
BUS RD10	L	B04V1		1-02 *			K1-48		1	SOURCE (K1-8)	N	9-5/8		197
BUS RD10	L	E08R1		1-03 *			KT-7		2	SOURCE	N	4-7/8		197
BUS RD10	L	F02U1		1-04 *			KE-3			SOURCE				197
BUS RD10	L			1								16-4/8		197
BUS RD11	L	B01N2		1-01 *			KF-3		2	SOURCE	N	2-5/8		198
BUS RD11	L	B04V2		1-02 *			K1-48		1	SOURCE (K1-8)	N	11-1/8		198
BUS RD11	L	F08H1		1-03 *			KT-7		2	SOURCE	N	4-3/8		198
BUS RD11	L	F02U2		1-04 *			KE-3			SOURCE				198
BUS RD11	L			1								18-1/8		198
BUS RD12	L	A04D1		1-01 *			K1-58		2	SOURCE (K1-8)	N	4-3/8		199
BUS RD12	L	B01B1		1-02 *			KF-3		1	SOURCE	N	12-7/8		199
BUS RD12	L	F02R1		1-03 *			KE-3		2	SOURCE	N	4-4/8		199
BUS RD12	L	E08P1		1-04 *			KT-27			SOURCE (KT-27)				199
BUS RD12	L			1								21-6/8		199
BUS RD13	L	A04F1		1-01 *			K1-58		1	SOURCE (K1-8)	N	2-6/8		200
BUS RD13	L	A01S1		1-02 *			KF-3		2	SOURCE	N	6-4/8		200
BUS RD13	L	C08H2		1-03 *			KT-2		1	SOURCE	N	12-3/8		200
BUS RD13	L	F02S2		1-04 *			KE-3			SOURCE				200
BUS RD13	L			1								21-5/8		200
BUS RD14	L	A01F1		1-01 *			KF-3		2	SOURCE	N	2-1/8		201
BUS RD14	L	A04C1		1-02 *			K1-58		1	SOURCE (K1-8)	N	9-3/8		201
BUS RD14	L	C08R2		1-03 *			KT-2		2	SOURCE	N	11-7/8		201
BUS RD14	L	F02V2		1-04 *			KE-3			SOURCE				201
BUS RD14	L			1								23-3/8		201
BUS RD15	L	A01A1		1-01 *			KF-3		2	SOURCE	N	2		202
BUS RD15	L	A04A1		1-02 *			K1-58		1	SOURCE (K1-8)	N	9-5/8		202
BUS RD15	L	C08S2		1-03 *			KT-2		2	SOURCE	N	11-7/8		202
BUS RD15	L	F02V1		1-04 *			KE-3			SOURCE				202
BUS RD15	L			1								23-4/8		202
BUS REQUEST	L	D09J2		1-01 *			DD		1	SOURCE	N	6-5/8		203
BUS REQUEST	L	F09P1		1-02 *			DD		2	SOURCE	N	1		203
BUS REQUEST	L	F09U2		1-03 *			DD			SOURCE				203
BUS REQUEST	L			1								7-5/8		203
BUS SACK	L	A09R2		1-01 *	H				2	SOURCE TWP		6-1/8		204
BUS SACK	L	C07L2		1-02 *	H		K4-5		1	TWP		10-1/8		204
BUS SACK	L	F09T2		1-03 *	H		DD		2	SOURCE TWP		3-5/8		204
BUS SACK	L	F03S2		1-04 *			KW-2			SOURCE				204
BUS SACK	L			1								19-7/8		204
BUS SSYN	L	A07D2		1-01 *	H		K4-4		2	SOURCE TWP		5-3/8		205
BUS SSYN	L	B09U1		1-02 *	H				1	SOURCE TWP		6-7/8		205
BUS SSYN	L	E08C1		1-03 *	H		KT-6		2	SOURCE TWP		1-3/8		205
BUS SSYN	L	E09J1		1-04 *	H		DD		1	SOURCE TWP		2-5/8		205
BUS SSYN	L	F09C1		1-05 *	H		DD		2	SOURCE TWP		4-1/8		205
BUS SSYN	L	F03N2		1-06 *			KW-2			SOURCE				205
BUS SSYN	L			1								20-3/8		205

RUN NAME	A/P	PIN NAME	ORDER PIN	BAY - ORDER	Q	DRAW OPT	RV RG Y	X	Z	REMARKS	NC FLAG	LENGTH	EXCEPTIONS	RUN NUMBER
BUS STOP	H	F07K1					K4-34			SOURCE (K4-4)			1-PIN RUN	206
BUT (37:34)	L	E05L1					K3-2			SOURCE			1-PIN RUN	207
BUT (3X)	L	C06D1		1-01 *			K5-36		1		N	4-1/8		208
BUT (3X)	L	D05J1		1-02 *			K3-2			SOURCE				208
BUT (3X)	L			1								4-1/8		208
BUT 02	H	C06E1					K5-38			SOURCE (K5-3)			1-PIN RUN	209
BUT 05	H	B06V1		1-01 *			K5-3		1	SOURCE	N	2-7/8		210
BUT 05	H	C08N2		1-02 *			KT-9							210
BUT 05	H			1								2-7/8		210
BUT 26	H	C06A1		1-01 *			K5-3		2	SOURCE	N	1-7/8		211
BUT 26	H	C08J1		1-02 *			KT-9		1		N	3-7/8		211
BUT 26	H	D07K1		1-03 *			K4-5							211
BUT 26	H			1								5-6/8		211
BUT 37	H	A07P1		1-01 *			K4-4		1		N	4-5/8		212
BUT 37	H	C06B1		1-02 *			K5-3		2	SOURCE	N	3-1/8		212
BUT 37	H	C02V2		1-03 *			KE-5							212
BUT 37	H			1								7-6/8		212
BYTE CODES	H	E06A1		1-01 *	1		K5-2		1		N	5-1/8		213
BYTE CODES	H	F05T2		1-02 *			K3-7			SOURCE				213
BYTE CODES	H			1								5-1/8		213
BYTE INSTR	H	C07R1		1-01 *			K4-4		1		N	3-3/8		214
BYTE INSTR	H	D05H1		1-02 *			K3-2678			SOURCE (K3-6)				214
BYTE INSTR	H			1								3-3/8		214
C DATA	H	B05F1		1-01 *			K3-9		1	SOURCE	N	8-7/8		215
C DATA	H	E06K1		1-02 *			K5-2							215
C DATA	H			1								8-7/8		215
C0BUS (1)	H	B07D2		1-01 *			K4-4		1		N	7-7/8		216
C0BUS (1)	H	D06S1		1-02 *			K5-4		2		N	2		216
C0BUS (1)	H	D03F2		1-03 *			K2-7			SOURCE				216
C0BUS (1)	H			1								9-7/8		216
C1BUS (1)	H	B07H2		1-01 *			K4-4		2		N	3-1/8		217
C1BUS (1)	H	C06E2		1-02 *			K5-4		1		N	5-3/8		217
C1BUS (1)	H	D03K1		1-03 *			K2-7			SOURCE				217
C1BUS (1)	H			1								8-4/8		217
CAST ADRS	H	D04P1					K1-7			SOURCE			1-PIN RUN	218
CBR (0)	H	C07F1		1-01 *			K4-5		1	SOURCE	N	9-1/8		219
CBR (0)	H	F05F2		1-02 *			K3-7							219
CBR (0)	H			1								9-1/8		219
CC INSTR	H	B05J2		1-01 *			K3-6		1	SOURCE	N	6-5/8		220
CC INSTR	H	D06R1		1-02 *			K5-2							220
CC INSTR	H			1								6-5/8		220

RUN NAME	A/P	PIN NAME	ORDER PIN	BAY - ORDER	Q	DRAW OPT	RV RG Y	X	Z	REMARKS	NC FLAG	LENGTH	EXCEPTIONS	RUN NUMBER
CIN00	L	A05P1		1-01 *			K3-8		1	SOURCE	N	11-3/8		221
CIN00	L	E04S2		1-02 *			K1-2							221
CIN00	L			1								11-3/8		221
CKODA (1)	H	A07T2		1-01 *			K4-4		1		N	14-3/8		222
CKODA (1)	H	F08V2		1-02 *			KT-3							222
CKODA (1)	H			1								14-3/8		222
CKOVF	H	A07R2		1-01 *			K4-4		2	SOURCE	N	6-1/8		223
CKOVF	H	C04D1		1-02 *			K1-7		1		N	7-5/8		223
CKOVF	H	E03U2		1-03 *			KJ-2							223
CKOVF	H			1								13-6/8		223
CLK (UPP*PUPP)	H	B03F2		1-01 *			K2-23		1		N	9-1/8		224
CLK (UPP*PUPP)	H	D07V2		1-02 *			K4-2			SOURCE				224
CLK (UPP*PUPP)	H			1								9-1/8		224
CLK B	H	E04D2		1-01 *			K1-2345		1		N	2-3/8		225
CLK B	H	E07M2		1-02 *			K4-2			SOURCE				225
CLK B	H			1								2-3/8		225
CLK B (1)	H	D03J1		1-01 *			K2-7		1	SOURCE	N	4-3/8		226
CLK B (1)	H	E07L2		1-02 *			K4-2							226
CLK B (1)	H			1								4-3/8		226
CLK BA	H	A04H2		1-01 *			K1-6		1		N	12-1/8		227
CLK BA	H	E07H1		1-02 *			K4-24			SOURCE (K4-2)				227
CLK BA	H			1								12-1/8		227
CLK BA (1)	H	B08U1		1-01 *	2		KT-9		2		N	7-1/8		228
CLK BA (1)	H	D03L1		1-02 *			K2-7		1	SOURCE	N	3-4/8		228
CLK BA (1)	H	E07J1		1-03 *			K4-2							228
CLK BA (1)	H			1								10-5/8		228
CLK BOVFLW	H	A07K2		1-01 *	1		K4-4		1	SOURCE	N	8-3/8		229
CLK BOVFLW	H	D06F2		1-02 *			K5-4							229
CLK BOVFLW	H			1								8-3/8		229
CLK BUS	H	D08H1		1-01 *			KT-3		1		N	3-5/8		230
CLK BUS	H	E07K1		1-02 *			K4-245			SOURCE (K4-2)				230
CLK BUS	H			1								3-5/8		230
CLK D	H	B04L2		1-01 *			K1-2345		1		N	9-3/8		231
CLK D	H	E06N2		1-02 *			K5-2		2		N	1		231
CLK D	H	E07N2		1-03 *			K4-2			SOURCE				231
CLK D	H			1								10-3/8		231
CLK D (1)	H	A01K2		1-01 *			KF-4		1		N	9-3/8		232
CLK D (1)	H	D03K2		1-02 *			K2-7		2	SOURCE	N	5-2/8		232
CLK D (1)	H	E07P2		1-03 *			K4-2							232
CLK D (1)	H			1								14-5/8		232
CLK EPS(C)	H	B02S2					KE-5			SOURCE			1-PIN RUN	233

RUN NAME	A/P	PIN NAME	ORDER PIN	BAY - ORDER	Q	DRAW OPT	RV RG Y	X	Z	REMARKS	NC FLAG	LENGTH	EXCEPTIONS	RUN NUMBER
CLK EPS(N,Z)	H	A01D2		1-01 *			KF-4		1		N	8-1/8		234
CLK EPS(N,Z)	H	D02A1		1-02 *			KE-5			SOURCE				234
CLK EPS(N,Z)	H			1								8-1/8		234
CLK EPS(V)	H	C02L2					KE-6						1-PIN RUN	235
CLK EU(88:57)	H	C01U2		1-01 *			KF-4		1		N	1-3/8		236
CLK EU(88:57)	H	C02N2		1-02 *			KE-457			SOURCE (KE-5)				236
CLK EU(88:57)	H			1								1-3/8		236
CLK IR	H	B05J1		1-01 *			K3-3		2		N	5-7/8		237
CLK IR	H	D07C1		1-02 *			K4-25		1	SOURCE	N	7-7/8		237
CLK IR	H	F08R2		1-03 *			KT-78							237
CLK IR	H			1								13-6/8		237
CLK MSYN	H	E08M1		1-01 *			KT-56		1		N	3-1/8		238
CLK MSYN	H	F07L2		1-02 *			K4-34			SOURCE (K4-4)				238
CLK MSYN	H			1								3-1/8		238
CLK NPR	H	C07C1					K4-5			SOURCE			1-PIN RUN	239
CLK PTRD	H	C07P1					K4-5			SOURCE			1-PIN RUN	240
CLK U(16:09)	H	C03F1		1-01 *			K2-4		1		N	6-5/8		241
CLK U(16:09)	H	D07T2		1-02 *			K4-2			SOURCE				241
CLK U(16:09)	H			1								6-5/8		241
CLK U(56:17)	H	C03K1		1-01 *			K2-5678		1		N	4-2/8		242
CLK U(56:17)	H	D08K1		1-02 *			KT-2		2		N	1-5/8		242
CLK U(56:17)	H	D07U2		1-03 *			K4-2			SOURCE				242
CLK U(56:17)	H			1								5-7/8		242
CLKIR (1)	H	D03T2		1-01 *			K2-8		1	SOURCE	N	3-4/8		243
CLKIR (1)	H	E07P1		1-02 *			K4-2		2		N	3-1/8		243
CLKIR (1)	H	F08K1		1-03 *			KT-7							243
CLKIR (1)	H			1								6-5/8		243
CLKL1 (0)	H	D03M2		1-01 *			K2-8		1	SOURCE	N	2-7/8		244
CLKL1 (0)	H	E07A1		1-02 *			K4-2							244
CLKL1 (0)	H			1								2-7/8		244
CLKL1 (1)	H	D03N2		1-01 *			K2-8		1	SOURCE	N	2-5/8		245
CLKL1 (1)	H	D07U1		1-02 *			K4-2							245
CLKL1 (1)	H			1								2-5/8		245
CLKLO (0)	H	D03R1		1-01 *			K2-8		1	SOURCE	N	6-5/8		246
CLKLO (0)	H	F07H1		1-02 *			K4-2							246
CLKLO (0)	H			1								6-5/8		246
CLKLO (1)	H	D03L2		1-01 *			K2-8		1	SOURCE	N	4-5/8		247
CLKLO (1)	H	E07M1		1-02 *			K4-2							247
CLKLO (1)	H			1								4-5/8		247
CLKOFF (1)	H	D03U2		1-01 *			K5-8		1	SOURCE	N	6-3/8		248
CLKOFF (1)	H	F07J1		1-02 *			K4-2							248
CLKOFF (1)	H			1								6-3/8		248

RUN NAME	A/P	PIN NAME	ORDER PIN	BAY - ORDER	Q	DRAW OPT	RV RG Y	X	Z	REMARKS	NC LENGTH FLAG	EXCEPTIONS	RUN NUMBER
CLR BERR	L	C06U1					K5-4			SOURCE		1-PIN RUN	249
CLR IR	L	B05H2					K3-3			SOURCE		1-PIN RUN	250
CLR PTR	L	D07H1					K4-56			SOURCE (K4-5)		1-PIN RUN	251
CLR PUPR	L	B03L1					K2-23			SOURCE (K2-2)		1-PIN RUN	252
CLR U(16:09)	L	C03H1					K2-4			SOURCE		1-PIN RUN	253
CLR UPP0	L	A03F2		1-01 *	1		K2-2		1		N 16-5/8		254
CLR UPP0	L	F07S2		1-02 *			K4-3			SOURCE			254
CLR UPP0	L			1							16-5/8		254
CLR UPP1	L	A03H2		1-01 *			K2-2		1		N 15-5/8		255
CLR UPP1	L	F07F2		1-02 *			K4-3			SOURCE			255
CLR UPP1	L			1							15-5/8		255
CLR UPP4,3	L	B03H1		1-01 *			K2-23		1		N 13-1/8		256
CLR UPP4,3	L	F07H2		1-02 *			K4-3			SOURCE			256
CLR UPP4,3	L			1							13-1/8		256
CLR UPP7,6:2	L	B03K1		1-01 *			K2-23		1		N 12-1/8		257
CLR UPP7,6:2	L	F07C1		1-02 *			K4-3			SOURCE			257
CLR UPP7,6:2	L			1							12-1/8		257
CLR UPP8,5	L	A03P1		1-01 *			K2-3		1		N 14-7/8		258
CLR UPP8,5	L	F07D2		1-02 *			K4-3			SOURCE			258
CLR UPP8,5	L			1							14-7/8		258
COMUXS0	H	B04H2		1-01 *			K1-5		1		N 5-1/8		259
COMUXS0	H	D05A1		1-02 *			K3-8			SOURCE			259
COMUXS0	H			1							5-1/8		259
COMUXS1	H	B04R2		1-01 *			K1-5		1		N 4-5/8		260
COMUXS1	H	D05D1		1-02 *			K3-8			SOURCE			260
COMUXS1	H			1							4-5/8		260
CONSL (0)	H	A07E1		1-01 *			K4-4		2		N 1-7/8		261
CONSL (0)	H	A06S2		1-02 *			K5-6		1	SOURCE	N 4-3/8		261
CONSL (0)	H	C07R1		1-03 *			K4-5		2		N 2-3/8		261
CONSL (0)	H	C08P2		1-04 *			KT-39		1		N 6-7/8		261
CONSL (0)	H	E05N2		1-05 *			K3-7		2		N 3-7/8		261
CONSL (0)	H	F07P1		1-06 *			K4-3						261
CONSL (0)	H			1							19-3/8		261
COUNT0 (1)	H	B01H2	D02R2	1-01 *			KF-4		1		N 7-1/8		262
COUNT0 (1)	H	D02R2		1-02 *			KE-6			SOURCE			262
COUNT0 (1)	H			1							7-1/8		262
COUNT1 (1)	H	B01H1	D02R1	1-01 *			KF-4		1		N 7-1/8		263
COUNT1 (1)	H	D02R1		1-02 *			KE-6			SOURCE			263
COUNT1 (1)	H			1							7-1/8		263

RUN NAME	A/P	PIN NAME	ORDER PIN	BAY - ORDER	Q	DRAW OPT	RV RG Y	X	Z	REMARKS	NC LENGTH FLAG	EXCEPTIONS	RUN NUMBER
COUNT2 (1)	H	B01F1		1-01 *			KF-4		1		N 6-7/8		264
COUNT2 (1)	H	D02N1		1-02 *			KE-6			SOURCE			264
COUNT2 (1)	H			1							6-7/8		264
COUNT3 (1)	H	B01R2		1-01 *			KF-4		1		N 5-7/8		265
COUNT3 (1)	H	D02N2		1-02 *			KE-6			SOURCE			265
COUNT3 (1)	H			1							5-7/8		265
COUNT4 (1)	H	B01S2		1-01 *			KF-4		1		N 7-3/8		266
COUNT4 (1)	H	E02D2		1-02 *			KE-6			SOURCE			266
COUNT4 (1)	H			1							7-3/8		266
COUNT5 (1)	H	B01T2		1-01 *			KF-4		1		N 6-5/8		267
COUNT5 (1)	H	E02C1		1-02 *			KE-6			SOURCE			267
COUNT5 (1)	H			1							6-5/8		267
COUNT6 (1)	H	B01U2		1-01 *			KF-4		1		N 7-1/8		268
COUNT6 (1)	H	E02E2		1-02 *			KE-6			SOURCE			268
COUNT6 (1)	H			1							7-1/8		268
COUNT7 (1)	H	B01V2		1-01 *			KF-4		1		N 6-5/8		269
COUNT7 (1)	H	E02D1		1-02 *			KE-6			SOURCE			269
COUNT7 (1)	H			1							6-5/8		269
COUNT=0	H	D02P2					KE-6			SOURCE		1-PIN RUN	270
COUT 15	L	B04D2		1-01 *			K1-5		1	SOURCE	N 5-1/8		271
COUT 15	L	C02N1		1-02 *			KE-6						271
COUT 15	L			1							5-1/8		271
COUT MUX	L	B04K2					K1-5			SOURCE		1-PIN RUN	272
D HOOK	H	E04V2		1-01 *			K1-8		1		N 3-4/8		273
D HOOK	H	E08J2		1-02 *			KT-9			SOURCE			273
D HOOK	H			1							3-4/8		273
D PERTE RELEASE	L	C07N1					K4-5			SOURCE		1-PIN RUN	274
D SACK	H	B07S2					K4-5			SOURCE		1-PIN RUN	275
D(03:00)=0	H	D04D1		1-01 *			K1-7		1	SOURCE	N 3-5/8		276
D(03:00)=0	H	E06B1		1-02 *			K5-2						276
D(03:00)=0	H			1							3-5/8		276
D(07:04)=0	H	D04H1		1-01 *			K1-7		1	SOURCE	N 3-6/8		277
D(07:04)=0	H	E06D2		1-02 *			K5-2						277
D(07:04)=0	H			1							3-6/8		277
D(15:00)=0	H	B02U2		1-01 *			KE-46		2	SOURCE	N 4-5/8		278
D(15:00)=0	H	D01F2		1-02 *			KF-4		1		N 2-5/8		278
D(15:00)=0	H	D04V2		1-03 *			K1-7		2	SOURCE	N 1-5/8		278
D(15:00)=0	H	D06P2		1-04 *			K5-2		1		N 5-7/8		278
D(15:00)=0	H	F05N2		1-05 *			K3-2						278
D(15:00)=0	H			1							14-6/8		278

RUN NAME	A/P	PIN NAME	ORDER PIN	BAY = ORDER	Q	DRAW OPT	RV RG Y	X	Z	REMARKS	NC FLAG	LENGTH	EXCEPTIONS	RUN NUMBER
D(15:00)=0	L	B02U1					KE=4			SOURCE			1=PIN RUN	279
D(C) (0)	H	B04N1		1=01	*		K1=5		1	SOURCE	N	1=3/8		280
D(C) (0)	H	B05L2		1=02	*		K3=9							280
D(C) (0)	H			1								1=3/8		280
D00 (1)	H	B05N2		1=01	*		K3=9		1		N	5=5/8		281
D00 (1)	H	D04H2		1=02	*		K1=27			SOURCE (K1=2)				281
D00 (1)	H			1								5=5/8		281
D07 (1)	H	D04L2		1=01	*		K1=37		1	SOURCE (K1=3)	N	3=3/8		282
D07 (1)	H	E06F2		1=02	*		K5=2							282
D07 (1)	H			1								3=3/8		282
D15 (1)	H	B04F2		1=01	*		K1=57		2	SOURCE (K1=5)	N	4=5/8		283
D15 (1)	H	C02K1		1=02	*		KE=4		1		N	7=3/8		283
D15 (1)	H	E06E2		1=03	*		K5=2							283
D15 (1)	H			1								12=0/8		283
DAD(3*2)	L	A05T2		1=01	*		K3=8		2	SOURCE	N	3=3/8		284
DAD(3*2)	L	B02C1		1=02	*		KE=5		1		N	7=1/8		284
DAD(3*2)	L	D01M1		1=03	*		KF=4							284
DAD(3*2)	L			1								10=4/8		284
DAD0 (1)	H	B06K2	C07S1	1=01	*		K5=6		1		N	3=7/8		285
DAD0 (1)	H	C07S1		1=02	*		K4=4		2		N	2=5/8		285
DAD0 (1)	H	D03D2		1=03	*		K2=7			SOURCE				285
DAD0 (1)	H			1								6=4/8		285
DAD1 (1)	H	B05B1		1=01	*		K3=8		2		N	4=5/8		286
DAD1 (1)	H	C07F2		1=02	*		K4=4		1		N	5=1/8		286
DAD1 (1)	H	D03P1		1=03	*		K2=7			SOURCE				286
DAD1 (1)	H			1								9=6/8		286
DAD2 (1)	H	A05S1		1=01	*		K3=8		2		N	5=5/8		287
DAD2 (1)	H	C07E2		1=02	*		K4=4		1		N	6=1/8		287
DAD2 (1)	H	D03N1		1=03	*		K2=7			SOURCE				287
DAD2 (1)	H			1								11=6/8		287
DAD3 (1)	H	B07M2		1=01	*		K4=4		2		N	2=1/8		288
DAD3 (1)	H	B05C1		1=02	*		K3=8		1		N	7=5/8		288
DAD3 (1)	H	D03M1		1=03	*		K2=7			SOURCE				288
DAD3 (1)	H			1								9=6/8		288
DISABLE TSACK	L	D07H2					K4=6						1=PIN RUN	289
DIV	L	C02D2					KE=45			SOURCE (KE=4)			1=PIN RUN	290
DM=0	L	E05J2		1=01	*		K3=3		1		N	2=1/8		291
DM=0	L	E08D1		1=02	*		KT=9							291
DM=0	L			1								2=1/8		291

RUN NAME	A/P	PIN NAME	ORDER PIN	BAY = ORDER	Q	DRAW OPT	RV RG Y	X	Z	REMARKS	NC FLAG	LENGTH	EXCEPTIONS	RUN NUMBER
DMUX00	H	A08E1		1=01	*		KT=4		1		N	14=3/8		292
DMUX00	H	E02K1		1=02	*		KE=2		2		N	1=5/8		292
DMUX00	H	E04L1		1=03	*		K1=289		1	SOURCE (K1=2)	N	3=5/8		292
DMUX00	H	F05L1		1=04	*		K3=39							292
DMUX00	H			1								19=5/8		292
DMUX01	H	A08D1		1=01	*		KT=4		1		N	13=1/8		293
DMUX01	H	E04J2		1=02	*		K1=289		2	SOURCE (K1=2)	N	1=4/8		293
DMUX01	H	E02J2		1=03	*		KE=2		1		N	4=1/8		293
DMUX01	H	F05F1		1=04	*		K3=39							293
DMUX01	H			1								18=6/8		293
DMUX02	H	A08C1		1=01	*		KT=4		1		N	10=3/8		294
DMUX02	H	D06M1		1=02	*		K5=2		2		N	3=5/8		294
DMUX02	H	E02K2		1=03	*		KE=2		1		N	1=3/8		294
DMUX02	H	E04M1		1=04	*		K1=289		2	SOURCE (K1=2)	N	3=1/8		294
DMUX02	H	F05H1		1=05	*		K3=3							294
DMUX02	H			1								18=4/8		294
DMUX03	H	A08J1		1=01	*		KT=4		2		N	9=7/8		295
DMUX03	H	D06N1		1=02	*		K5=2		1		N	3=2/8		295
DMUX03	H	E02J1		1=03	*		KE=2		2		N	4=3/8		295
DMUX03	H	F04J2		1=04	*		K1=289		1	SOURCE (K1=2)	N	0=1/8		295
DMUX03	H	F05K1		1=05	*		K3=3							295
DMUX03	H			1								17=5/8		295
DMUX04	H	A08M1		1=01	*		KT=4		1		N	9=5/8		296
DMUX04	H	D04F1		1=02	*		K1=389		2	SOURCE (K1=3)	N	2		296
DMUX04	H	D05S2		1=03	*		K3=3		1		N	1=5/8		296
DMUX04	H	E06C1		1=04	*		K5=2		2		N	2=7/8		296
DMUX04	H	F02H1		1=05	*		KE=2							296
DMUX04	H			1								16=1/8		296
DMUX05	H	A08L1		1=01	*		KT=4		1		N	9=5/8		297
DMUX05	H	D04C1		1=02	*		K1=389		2	SOURCE (K1=3)	N	2=2/8		297
DMUX05	H	D05P2		1=03	*		K3=3		1		N	2=6/8		297
DMUX05	H	E02H2		1=04	*		KE=2		2		N	3=1/8		297
DMUX05	H	E06P1		1=05	*		K5=2							297
DMUX05	H			1								17=6/8		297
DMUX06	H	B08D1		1=01	*		KT=4		1		N	8=5/8		298
DMUX06	H	D04M1		1=02	*		K1=389		2	SOURCE (K1=3)	N	1=5/8		298
DMUX06	H	D05T2	E06V2	1=03	*		K3=3		1		N	3=5/8		298
DMUX06	H	E06V2		1=04	*		K5=2		2		N	3=4/8		298
DMUX06	H	F02N1		1=05	*		KE=2							298
DMUX06	H			1								17=3/8		298
DMUX07	H	B08F2		1=01	*		KT=4		1		N	7=5/8		299
DMUX07	H	D04F2		1=02	*		K1=389		2	SOURCE (K1=3)	N	1=7/8		299
DMUX07	H	D05R2		1=03	*		K3=3		1		N	3=3/8		299
DMUX07	H	E06R2		1=04	*		K5=2		2		N	3=6/8		299
DMUX07	H	F02M2		1=05	*		KE=2							299
DMUX07	H			1								16=5/8		299

RUN NAME	A/P	PIN NAME	ORDER PIN	BAY - ORDER	Q	DRAW OPT	RV RG Y	X	Z	REMARKS	NC FLAG	LENGTH	EXCEPTIONS	RUN NUMBER
DMUX08	H	B08J1		1-01 *			KT-4		1		N	3-1/8		300
DMUX08	H	B04S2		1-02 *			K1-489		2	SOURCE (K1-4)	N	2-1/8		300
DMUX08	H	C05H1		1-03 *			K3-3		1		N	6-5/8		300
DMUX08	H	E03H1		1-04 *			KJ-2		2		N	3-7/8		300
DMUX08	H	F02N2		1-05 *			KE-2							300
DMUX08	H			1								15-6/8		300
DMUX09	H	B08K2		1-01 *			KT-4		1		N	3-1/8		301
DMUX09	H	B04T2		1-02 *			K1-489		2	SOURCE (K1-4)	N	2-1/8		301
DMUX09	H	C05J1		1-03 *			K3-3		1		N	6-5/8		301
DMUX09	H	E03J1		1-04 *			KJ-2		2		N	3-3/8		301
DMUX09	H	F02J2		1-05 *			KE-2							301
DMUX09	H			1								15-2/8		301
DMUX10	H	C08J2		1-01 *			KT-4		1		N	2-5/8		302
DMUX10	H	C05E1		1-02 *			K3-3		2		N	1-7/8		302
DMUX10	H	B04U1		1-03 *			K1-489		1	SOURCE (K1-4)	N	7-5/8		302
DMUX10	H	E03K1		1-04 *			KJ-2		2		N	3-5/8		302
DMUX10	H	F02K1		1-05 *			KE-2							302
DMUX10	H			1								15-6/8		302
DMUX11	H	B08L2		1-01 *			KT-4		1		N	3-3/8		303
DMUX11	H	B04U2		1-02 *			K1-489		2	SOURCE (K1-4)	N	1-7/8		303
DMUX11	H	C05F1		1-03 *			K3-3		1		N	7-3/8		303
DMUX11	H	E03M1		1-04 *			KJ-2		2		N	3-1/8		303
DMUX11	H	F02K2		1-05 *			KE-2							303
DMUX11	H			1								15-6/8		303
DMUX12	H	A04B1		1-01 *			K1-589		1	SOURCE (K1-5)	N	5-1/8		304
DMUX12	H	B05R1		1-02 *			K3-3		2		N	5-1/8		304
DMUX12	H	C08V2		1-03 *			KT-2		1		N	7-5/8		304
DMUX12	H	E03N1		1-04 *			KJ-2		2		N	2-5/8		304
DMUX12	H	F02D1		1-05 *			KE-2							304
DMUX12	H			1								20-4/8		304
DMUX13	H	A04D2		1-01 *	2		K1-589		2	SOURCE (K1-5) 3-0	N	6-5/8		305
DMUX13	H	B05N1		1-02 *			K3-3		1		N	6-3/8		305
DMUX13	H	D08E2		1-03 *			KT-2		2		N	5-5/8		305
DMUX13	H	E03F1		1-04 *			KJ-2		1		N	2-5/8		305
DMUX13	H	F02E1		1-05 *			KE-2							305
DMUX13	H			1								21-2/8		305
DMUX14	H	A04F2		1-01 *			K1-589		2	SOURCE (K1-5)	N	3-7/8		306
DMUX14	H	B05M1		1-02 *			K3-3		1		N	6-5/8		306
DMUX14	H	D08D2		1-03 *			KT-2		2		N	6-4/8		306
DMUX14	H	E03S1		1-04 *			KJ-2		1		N	2-3/8		306
DMUX14	H	F02F1		1-05 *			KE-2							306
DMUX14	H			1								19-3/8		306
DMUX15	H	A04E2		1-01 *			K1-589		1	SOURCE (K1-5)	N	4-3/8		307
DMUX15	H	B05P1		1-02 *			K3-3		2		N	5-1/8		307
DMUX15	H	C08U2		1-03 *			KT-2		1		N	7-7/8		307
DMUX15	H	E03R1		1-04 *			KJ-2		2		N	2-1/8		307
DMUX15	H	F02B1		1-05 *			KE-2							307
DMUX15	H			1								19-4/8		307

RUN NAME	A/P	PIN NAME	ORDER PIN	BAY - ORDER	Q	DRAW OPT	RV RG Y	X	Z	REMARKS	NC FLAG	LENGTH	EXCEPTIONS	RUN NUMBER
DOUT HIGH	H	B07H1		1-01 *			K4-4		1	SOURCE	N	8-3/8		308
DOUT HIGH	H	E08E1		1-02 *			KT-26		2		N	4-1/8		308
DOUT HIGH	H	E03V1		1-03 *			KJ-2							308
DOUT HIGH	H			1								12-4/8		308
DOUT LOW	H	B07K1		1-01 *			K4-4		1	SOURCE	N	8-3/8		309
DOUT LOW	H	E08F1		1-02 *			KT-6							309
DOUT LOW	H			1								8-3/8		309
DR00	L	A02L1					KE-5			SOURCE			1-PIN RUN	310
DR00 (1)	H	B02B1		1-01 *			KE-23456		2	SOURCE (KE-2)	N	2-3/8		311
DR00 (1)	H	B01R1		1-02 *			KF-2		1		N	8-1/8		311
DR00 (1)	H	E01N2		1-03 *			KM-2							311
DR00 (1)	H			1								10-4/8		311
DR01 (1)	H	C01H2		1-01 *			KF-3		1		N	6-1/8		312
DR01 (1)	H	E02F2		1-02 *			KE-23			SOURCE (KE-2)				312
DR01 (1)	H			1								6-1/8		312
DR02 (1)	H	C01B1		1-01 *			KF-3		1		N	6-5/8		313
DR02 (1)	H	E02F1		1-02 *			KE-23			SOURCE (KE-2)				313
DR02 (1)	H			1								6-5/8		313
DR03 (1)	H	B01S1		1-01 *			KF-3		1		N	9-3/8		314
DR03 (1)	H	E02V2		1-02 *			KE-23			SOURCE (KE-2)				314
DR03 (1)	H			1								9-3/8		314
DR04 (1)	H	B01D1		1-01 *			KF-3		1		N	9-3/8		315
DR04 (1)	H	E02M1		1-02 *			KE-23			SOURCE (KE-2)				315
DR04 (1)	H			1								9-3/8		315
DR05 (1)	H	A01N1		1-01 *			KF-3		1		N	11-5/8		316
DR05 (1)	H	E02R1		1-02 *			KE-23			SOURCE (KE-2)				316
DR05 (1)	H			1								11-5/8		316
DR06 (1)	H	A01F2		1-01 *			KF-3		1		N	12-3/8		317
DR06 (1)	H	E02R2		1-02 *			KE-23			SOURCE (KE-2)				317
DR06 (1)	H			1								12-3/8		317
DR07 (1)	H	E02P1					KE-23			SOURCE (KE-2)			1-PIN RUN	318
DR08 (1)	H	A01P2		1-01 *			KF-4		1		N	11-7/8		319
DR08 (1)	H	E02V1		1-02 *			KE-23			SOURCE (KE-2)				319
DR08 (1)	H			1								11-7/8		319
DR09 (1)	H	A01R2		1-01 *			KF-4		1		N	9-6/8		320
DR09 (1)	H	E01D2		1-02 *			KM-2		2		N	3-7/8		320
DR09 (1)	H	F02J1		1-03 *			KE-23			SOURCE (KE-2)				320
DR09 (1)	H			1								13-5/8		320
DR10 (1)	H	F02H2					KE-23			SOURCE (KE-2)			1-PIN RUN	321
DR11 (1)	H	E02T2					KE-23			SOURCE (KE-2)			1-PIN RUN	322

RUN NAME	A/P	PIN NAME	ORDER PIN	BAY - ORDER	Q	DRAW	RV RG Y OPT	X	Z	REMARKS	NC FLAG	LENGTH	EXCEPTIONS	RUN NUMBER
DR12 (1)	H	E02P2					KE-23			SOURCE (KE-2)			1-PIN RUN	323
DR13 (1)	H	E02S1					KE-23			SOURCE (KE-2)			1-PIN RUN	324
DR14 (1)	H	E02N1					KE-23			SOURCE (KE-2)			1-PIN RUN	325
DR15 (1)	H	C02F1					KE-2345			SOURCE (KE-2)			1-PIN RUN	326
DUBBERR	L	B06U2		1-01 *			K5-4	1		SOURCE	N	8-5/8		327
DUBBERR	L	E07T2		1-02 *			K4-3							327
DUBBERR	L			1								8-5/8		327
E(P1+P2)	H	A01H2		1-01 *			KF-2	1			N	12-3/8		328
E(P1+P2)	H	E02S2		1-02 *			KE-25			SOURCE (KE-5)				328
E(P1+P2)	H			1								12-3/8		328
ECIN00	H	A05S2		1-01 *			K3-8	2			N	2-5/8		329
ECIN00	H	B02F2		1-02 *			KE-5	1		SOURCE	N	9-3/8		329
ECIN00	H	E01M2		1-03 *			KM-2							329
ECIN00	H			1								12-0/8		329
ECLK U	L	C02M2		1-01 *			KE-5	1			N	5-4/8		330
ECLK U	L	D07S1		1-02 *			K4-							330
ECLK U	L			1								5-4/8		330
ECOMUXS0	L	D02H2		1-01 *			KE-5	1		SOURCE	N	2-1/8		331
ECOMUXS0	L	D05C1		1-02 *			K3-8							331
ECOMUXS0	L			1								2-1/8		331
ECOMUXS1	L	D02F2		1-01 *			KE-5	1		SOURCE	N	1-5/8		332
ECOMUXS1	L	D05E1		1-02 *			K3-8							332
ECOMUXS1	L			1								1-5/8		332
EMT	L	B06R1		1-01 *			K5-5	1			N	7-5/8		333
EMT	L	E05F1		1-02 *			K3-6			SOURCE				333
EMT	L			1								7-5/8		333
ENPR CLK	L	A02M2		1-01 *			KE-9	1		SOURCE	N	9-7/8		334
ENPR CLK	L	D07E1		1-02 *			K4-5							334
ENPR CLK	L			1								9-7/8		334
EOVFL STOP	H	B07F2		1-01 *			K4-4	1			N	10-1/8		335
EOVFL STOP	H	E03F2		1-02 *			KJ-2			SOURCE				335
EOVFL STOP	H			1								10-1/8		335
EOVFLW	L	D06R2		1-01 *			K5-4	1			N	4-5/8		336
EOVFLW	L	E03T2		1-02 *			KJ-2			SOURCE				336
EOVFLW	L			1								4-5/8		336
EPS(C) (1)	H	C01J1		1-01 *			KF-2	1			N	4-7/8		337
EPS(C) (1)	H	D02V1		1-02 *			KE-356	2		SOURCE (KE-6)	N	2-5/8		337
EPS(C) (1)	H	E01R2		1-03 *			KM-2							337
EPS(C) (1)	H			1								7-4/8		337

RUN NAME	A/P	PIN NAME	ORDER PIN	BAY - ORDER	Q	DRAW	RV RG Y OPT	X	Z	REMARKS	NC FLAG	LENGTH	EXCEPTIONS	RUN NUMBER
EPS(N) (1)	H	A01D1		1-01 *			KF-3	1			N	6-7/8		338
EPS(N) (1)	H	C02K2		1-02 *			KE-346	2		SOURCE (KE-6)	N	6-1/8		338
EPS(N) (1)	H	E01L2		1-03 *			KM-2							338
EPS(N) (1)	H			1								13-0/8		338
EPS(V) (1)	H	C02L1		1-01 *			KE-36	1		SOURCE (KE-6)	N	5-3/8		339
EPS(V) (1)	H	E01E2		1-02 *			KM-2							339
EPS(V) (1)	H			1								5-3/8		339
EPS(Z) (0)	H	A01M2		1-01 *			KF-4	1			N	8-5/8		340
EPS(Z) (0)	H	D02J2		1-02 *			KE-6			SOURCE				340
EPS(Z) (0)	H			1								8-5/8		340
EPS(Z) (1)	H	D02F1		1-01 *			KE-3	1			N	3-5/8		341
EPS(Z) (1)	H	E01H1		1-02 *			KM-2							341
EPS(Z) (1)	H			1								3-5/8		341
ESALU0	L	A02C1		1-01 *			KE-5	1		SOURCE	N	3-3/8		342
ESALU0	L	A05N2		1-02 *			K3-8							342
ESALU0	L			1								3-3/8		342
ESALU1	L	A05L2		1-01 *			K3-8	1			N	3-4/8		343
ESALU1	L	B02E2		1-02 *			KE-5			SOURCE				343
ESALU1	L			1								3-4/8		343
ESALU2	L	A02F1		1-01 *			KE-5	1		SOURCE	N	2-5/8		344
ESALU2	L	A05M2		1-02 *			K3-8							344
ESALU2	L			1								2-5/8		344
ESALU3	L	A02D1		1-01 *			KE-5	1		SOURCE	N	2-5/8		345
ESALU3	L	A05K2		1-02 *			K3-8							345
ESALU3	L			1								2-5/8		345
ESALUM	H	B05M2					K3-8						1-PIN RUN	346
EUBC1	L	A03L1		1-01 *			K2-2	1			N	3-1/8		347
EUBC1	L	B02F1		1-02 *			KE-4			SOURCE				347
EUBC1	L			1								3-1/8		347
EUBC2	L	A02S2		1-01 *			KE-4	1		SOURCE	N	0-5/8		348
EUBC2	L	A03N1		1-02 *			K2-2							348
EUBC2	L			1								0-5/8		348
EUBC3	L	A03S1		1-01 *			K2-2	1			N	4-3/8		349
EUBC3	L	C02B1		1-02 *			KE-4			SOURCE				349
EUBC3	L			1								4-3/8		349
EUBC4	L	A03C1		1-01 *			K2-3	1			N	4-7/8		350
EUBC4	L	B02T2		1-02 *			KE-4			SOURCE				350
EUBC4	L			1								4-7/8		350
EUBC5	L	B03D2		1-01 *			K2-3	1			N	4-1/8		351
EUBC5	L	C01F2		1-02 *			KF-42			SOURCE (KF-4)				351
EUBC5	L			1								4-1/8		351

RUN NAME	A/P	PIN NAME	ORDER PIN	BAY - ORDER	Q	DRAW OPT	RV RG Y	X	Z	REMARKS	NC FLAG	LENGTH	EXCEPTIONS	RUN NUMBER
EUBC6	L	B03R1					K2-3						1-PIN RUN	352
EUBC7	L	A03R1					K2-3						1-PIN RUN	353
EUBC8	L	A03D1		1-01 *			K2-3		1		N	3-1/8		354
EUBC8	L	B02R1		1-02 *			KE-5			SOURCE				354
EUBC8	L			1								3-1/8		354
EUBF1 (1)	H	A01T2		1-01 *			KF-4		1		N	2-5/8		355
EUBF1 (1)	H	B02T1		1-02 *			KE-457			SOURCE (KE-7)				355
EUBF1 (1)	H			1								2-5/8		355
EUBF1 (1)	H	A01D2		1-01 *			KF-4		1		N	1-7/8		356
EUBF1 (1)	H	B02D1		1-02 *			KE-457			SOURCE (KE-7)				356
EUBF1 (1)	H			1								1-7/8		356
EUBF2 (1)	H	A01V2		1-01 *			KF-4		1		N	1-3/8		357
EUBF2 (1)	H	A02N1		1-02 *			KE-47			SOURCE (KE-7)				357
EUBF2 (1)	H			1								1-3/8		357
EUBF3 (1)	H	C02S2					KE-7			SOURCE			1-PIN RUN	358
EUBF4 (0)	H	D01D2		1-01 *			KF-4		1	SOURCE	N	0-4/8		359
EUBF4 (0)	H	D02R1		1-02 *			KE-4							359
EUBF4 (0)	H			1								0-4/8		359
EUBF8	H	C02S2					KE-35						1-PIN RUN	360
EXT B CLK TRAP	I	B02D2		1-01 *			KE-5		1	SOURCE	N	2-5/8		361
EXT B CLK TRAP	I	B06F2		1-02 *			K5-4							361
EXT B CLK TRAP	I			1								2-5/8		361
FALSE BR	L	C05M1		1-01 *			K3-5		1		N	6-3/8		362
FALSE BR	L	B06N1		1-02 *			K5-3			SOURCE				362
FALSE BR	L			1								6-3/8		362
FAULT	H	A07H2		1-01 *			K4-4		1		N	6-7/8		363
FAULT	H	C08S1		1-02 *			KT-3			SOURCE				363
FAULT	H			1								6-7/8		363
FAULT	L	C08R1		1-01 *			KT-3		1	SOURCE	N	9-3/8		364
FAULT	L	B05N2		1-02 *			K3-2							364
FAULT	L			1								9-3/8		364
FAUX ALU	H	A02R1		1-01 *			KE-5		1		N	10-3/8		365
FAUX ALU	H	D01P1		1-02 *			KF-4			SOURCE				365
FAUX ALU	H			1								10-3/8		365
FC1BUS (1)	H	B02A1		1-01 *			KE-9		1		N	7-1/8		366
FC1BUS (1)	H	D01M2		1-02 *			KF-4			SOURCE				366
FC1BUS (1)	H			1								7-1/8		366
FDIV	H	C02F2		1-01 *			KE-2		1		N	4-1/8		367
FDIV	H	D01L2		1-02 *			KF-4			SOURCE				367
FDIV	H			1								4-1/8		367

RUN NAME	A/P	PIN NAME	ORDER PIN	BAY - ORDER	Q	DRAW OPT	RV RG Y	X	Z	REMARKS	NC FLAG	LENGTH	EXCEPTIONS	RUN NUMBER
FIS INSTR	L	B02P2		1-01 *			KE-5		2		N	3-1/8		368
FIS INSTR	L	C02J1		1-02 *			KE-4		1		N	4-1/8		368
FIS INSTR	L	D01F2		1-03 *			KF-4			SOURCE				368
FIS INSTR	L			1								7-2/8		368
FUBC1	L	B01J2		1-01 *			KF-4		1	SOURCE	N	1-3/8		369
FUBC1	L	B02P2		1-02 *			KE-4							369
FUBC1	L			1								1-3/8		369
GND AB		A01C2		1-01 *	P				1	GND AB		1		370
GND AB		A02C2		1-02 *	P				2	,GND CD		1		370
GND AB		A03C2		1-03 *	P				1	AND GND EF		1		370
GND AB		A04C2		1-04 *	P				2	ARE		1		370
GND AB		A05C2		1-05 *	P				1	PHYSICALLY		1		370
GND AB		A06C2		1-06 *	P				2	TIED		1		370
GND AB		A07C2		1-07 *	P				1	TOGETHER		1		370
GND AB		A08C2		1-08 *	P				2	BY EACH		1		370
GND AB		A09C2		1-09 *	P				1			0-1/8		370
GND AB		A09B2		1-10 *	P				2			1-7/8		370
GND AB		A09N1		1-11 *	P				1			0-1/8		370
GND AB		A09P1		1-12 *	P				2			0-1/8		370
GND AB		A09R1		1-13 *	P				1			0-1/8		370
GND AB		A09S1		1-14 *	P				2			0-1/8		370
GND AB		A09T1		1-15 *	P				1			0-4/8		370
GND AB		A09V2		1-16 *	P				2			1-2/8		370
GND AB		B09B2		1-17 *	P				1			0-1/8		370
GND AB		B09C2		1-18 *	P				2			0-1/8		370
GND AB		B09D1		1-19 *	P				1			0-1/8		370
GND AB		B09F1		1-20 *	P				2			0-4/8		370
GND AB		B08C2		1-21 *	P				1			1		370
GND AB		B07C2		1-22 *	P				2			0-4/8		370
GND AB		B07C1		1-23 *	P				1			0-4/8		370
GND AB		B06C2		1-24 *	P				2			1		370
GND AB		B05C2		1-25 *	P				1			1		370
GND AB		B04C2		1-26 *	P				2			1		370
GND AB		B03C2		1-27 *	P				1			1		370
GND AB		B02C2		1-28 *	P				2			1		370
GND AB		B01C2		1-29 *	P				1			1-5/8		370
GND AB		A01T1		1-30 *	P				2			1		370
GND AB		A02T1		1-31 *	P				1			1		370
GND AB		A03T1		1-32 *	P				2			1		370
GND AB		A04T1		1-33 *	P				1			1		370
GND AB		A05T1		1-34 *	P				2			1		370
GND AB		A06T1		1-35 *	P				1			1		370
GND AB		A07T1		1-36 *	P				2			1		370
GND AB		A08T1		1-37 *	P				1			3-2/8		370
GND AB		B08T1		1-38 *	P				2			1		370
GND AB		B09T1		1-39 *	P				1			0-4/8		370
GND AB		B09V2		1-40 *	P				2			1-7/8		370
GND AB		B07T1		1-41 *	P				1			1		370
GND AB		B06T1		1-42 *	P				2			1		370
GND AB		B05T1		1-43 *	P				1			1		370
GND AB		B04T1		1-44 *	P				2			1		370
GND AB		B03T1		1-45 *	P				1			1		370
GND AB		B02T1		1-46 *	P				2			1		370
GND AB		B01T1		1-47 *										370

RUN NAME	A/P	PIN NAME	ORDER PIN	BAY - ORDER	Q	DRAW OPT	RV	RG	Y	X	Z	REMARKS	NC LENGTH FLAG	EXCEPTIONS	RUN NUMBER
GND AB				1									41-3/8		370
GND CD		C01C2		1-01 *	P						2	GND AB	1		371
GND CD		C02C2		1-02 *	P						1	,GND CD,EF	0-4/8		371
GND CD		C03C1		1-03 *	P						2	ARE	0-4/8		371
GND CD		C03C2		1-04 *	P						1	PHYSICALLY	1		371
GND CD		C04C2		1-05 *	P						2	TIED	1		371
GND CD		C05C2		1-06 *	P						1	TOGETHER	1-4/8		371
GND CD		C07C2		1-07 *	P						2	BY ETCH	1		371
GND CD		C06C2		1-08 *	P						1		2-1/8		371
GND CD		C06T1		1-09 *	P						2		1		371
GND CD		C05T1		1-10 *	P						1		1		371
GND CD		C04T1		1-11 *	P						2		1		371
GND CD		C03T1		1-12 *	P						1		0-4/8		371
GND CD		C03V2		1-13 *	P						2		1-3/8		371
GND CD		C02T1		1-14 *	P						1		1		371
GND CD		C01T1		1-15 *	P						2		5-5/8		371
GND CD		C08C2		1-16 *	P						1		1		371
GND CD		C09C2		1-17 *	P						2		2-1/8		371
GND CD		C09T1		1-18 *	P						1		1		371
GND CD		C08T1		1-19 *	P						2		1		371
GND CD		C07T1		1-20 *	P						1		2		371
GND CD		D09C2		1-21 *	P						2		1		371
GND CD		D08C2		1-22 *	P						1		1		371
GND CD		D07C2		1-23 *	P						2		31		371
GND CD		D69C2		1-24 *	P						1		32		371
GND CD		D05C2		1-25 *	P						2		1		371
GND CD		D04C2		1-26 *	P						1		1		371
GND CD		D03C2		1-27 *	P						2		0-4/8		371
GND CD		D03C1		1-28 *	P						1		0-4/8		371
GND CD		D02C2		1-29 *	P						2		1		371
GND CD		D01C2		1-30 *	P						1		2-1/8		371
GND CD		D01T1		1-31 *	P						2		1		371
GND CD		D02T1		1-32 *	P						1		1		371
GND CD		D03T1		1-33 *	P						2		0-4/8		371
GND CD		D03V2		1-34 *	P						1		0-4/8		371
GND CD		D04T1		1-35 *	P						2		1		371
GND CD		D05T1		1-36 *	P						1		1		371
GND CD		D06T1		1-37 *	P						2		1		371
GND CD		D07T1		1-38 *	P						1		1		371
GND CD		D08T1		1-39 *	P						2		1		371
GND CD		D09T1		1-40 *											371
GND CD				1									106-3/8		371

RUN NAME	A/P	PIN NAME	ORDER PIN	BAY - ORDER	Q	DRAW OPT	RV	RG	Y	X	Z	REMARKS	NC LENGTH FLAG	EXCEPTIONS	RUN NUMBER
GND EF		E09C2		1-01 *	P						2	GND AB	0-4/8		372
GND EF		E09A1		1-02 *	P						1	,GND CD	0-4/8		372
GND EF		E08C2		1-03 *	P						2	AND GND EF	1		372
GND EF		E07C2		1-04 *	P						1	ARE	1		372
GND EF		E06C2		1-05 *	P						2	PHYSICALLY	1		372
GND EF		E05C2		1-06 *	P						1	TIED	1		372
GND EF		E04C2		1-07 *	P						2	TOGETHER	1		372
GND EF		E03C2		1-08 *	P						1	BY ETCH	1		372
GND EF		E02C2		1-09 *	P						2		1		372
GND EF		E01C2		1-10 *	P						1		2-1/8		372
GND EF		E01T1		1-11 *	P						2		1		372
GND EF		E02T1		1-12 *	P						1		1		372
GND EF		E03T1		1-13 *	P						2		1		372
GND EF		E04T1		1-14 *	P						1		1		372
GND EF		E05T1		1-15 *	P						2		1		372
GND EF		E06T1		1-16 *	P						1		1		372
GND EF		E07T1		1-17 *	P						2		1		372
GND EF		E08T1		1-18 *	P						1		1		372
GND EF		E09T1		1-19 *	P						2		1-5/8		372
GND EF		F09C2		1-20 *	P						1		1		372
GND EF		F08C2		1-21 *	P						2		1		372
GND EF		F07C2		1-22 *	P						1		1		372
GND EF		F06C2		1-23 *	P						2		1		372
GND EF		F05C2		1-24 *	P						1		1		372
GND EF		F04C2		1-25 *	P						2		1		372
GND EF		F03C2		1-26 *	P						1		1		372
GND EF		F02C2		1-27 *	P						2		1		372
GND EF		F01C2		1-28 *	P						1		2-1/8		372
GND EF		F01T1		1-29 *	P						2		1		372
GND EF		F02T1		1-30 *	P						1		1		372
GND EF		F03T1		1-31 *	P						2		1		372
GND EF		F04T1		1-32 *	P						1		1		372
GND EF		F05T1		1-33 *	P						2		1		372
GND EF		F06T1		1-34 *	P						1		1		372
GND EF		F07T1		1-35 *	P						2		1		372
GND EF		F08T1		1-36 *	P						1		1		372
GND EF		F09T1		1-37 *	P						2		1-5/8		372
GND EF		F09J2		1-38 *											372
GND EF				1									39-4/8		372
GPC=1	L	A01N2		1-01 *		KF-4					1		N 1-7/8		373
GPC=1	L	A02A1		1-02 *		KE-5									373
GPC=1	L			1									1-7/8		373
GPC=2	L	A02F1		1-01 *		KE-5					1	SOURCE	N 9-5/8		374
GPC=2	L	D01N1		1-02 *		KF-4									374
GPC=2	L			1									9-5/8		374
GPC=5	L	A02J1		1-01 *		KE-25					1	SOURCE (KF-5)	N 6-7/8		375
GPC=5	L	C01T2		1-02 *		KF-2									375
GPC=5	L			1									6-7/8		375
GPC=6	L	A02K2		1-01 *		KE-5					1	SOURCE	N 9-5/8		376
GPC=6	L	D01R1		1-02 *		KF-4									376
GPC=6	L			1									9-5/8		376

RUN NAME	A/P	PIN NAME	ORDER PIN	BAY - ORDER	O	DRAW OPT	RV RG Y	X	Z	REMARKS	NC FLAG	LENGTH	EXCEPTIONS	RUN NUMBER
GPC=7	L	A02J2		1-01 *			KE-5		1	SOURCE	N	9-7/8		377
GPC=7	L	D01T2		1-02 *			KF-4							377
GPC=7	L			1								9-7/8		377
GRANT HP	H	D07M1					K4-56			SOURCE (K4=5)			1-PIN RUN	378
HALT SW	L	B06R1		1-01 *			K5-7		2	SOURCE	N	3-5/8		379
HALT SW	L	C07D1		1-02 *			K4-5		1		N	9-7/8		379
HALT SW	L	F07S1		1-03 *			K4-3		2		N	1-5/8		379
HALT SW	L	F05P1		1-04 *			K3-247							379
HALT SW	L			1								15-1/8		379
HSR00 (1)	H	C01N2	C02S1	1-01 *			KF-2		1	SOURCE	N	0-5/8		380
HSR00 (1)	H	C02S1		1-02 *										380
HSR00 (1)	H			1								0-5/8		380
HSR01 (1)	H	C01M1					KF-2			SOURCE			1-PIN RUN	381
HSR02 (1)	H	C01F1					KF-2			SOURCE			1-PIN RUN	382
HSR03 (1)	H	C01R1					KF-2			SOURCE			1-PIN RUN	383
HSR04 (1)	H	B01C1					KF-2			SOURCE			1-PIN RUN	384
HSR05 (1)	H	A01P1					KF-2			SOURCE			1-PIN RUN	385
HSR06 (1)	H	A01L1					KF-2			SOURCE			1-PIN RUN	386
HSR07 (1)	H	A01M1					KF-2			SOURCE			1-PIN RUN	387
HSR08 (1)	H	C01S2					KF-2			SOURCE			1-PIN RUN	388
HSR09 (1)	H	C01R2					KF-2			SOURCE			1-PIN RUN	389
HSR10 (1)	H	C01F2					KF-2			SOURCE			1-PIN RUN	390
HSR11 (1)	H	C01S1					KF-2			SOURCE			1-PIN RUN	391
HSR12 (1)	H	B01F2					KF-2			SOURCE			1-PIN RUN	392
HSR13 (1)	H	B01E2					KF-2			SOURCE			1-PIN RUN	393
HSR13 (1)	H	B01D2					KF-2			SOURCE			1-PIN RUN	394
HSR15	L	A01H1		1-01 *			KF-2		1	SOURCE	N	5-3/8		395
HSR15	L	C02A1		1-02 *			KF-2							395
HSR15	L			1								5-3/8		395
HSR15 (1)	H	B01E1					KF-2			SOURCE			1-PIN RUN	396
IDLE	L	A06K2		1-01 *			K5-7		1		N	8-5/8		397
IDLE	L	D07J2		1-02 *			K4-24			SOURCE (K4=2)				397
IDLE	L			1								8-5/8		397

RUN NAME	A/P	PIN NAME	ORDER PIN	BAY - ORDER	O	DRAW OPT	RV RG Y	X	Z	REMARKS	NC FLAG	LENGTH	EXCEPTIONS	RUN NUMBER
ILL INSTR	L	C06H1		1-01 *			K5-5		1		N	9-5/8		398
ILL INSTR	L	F05R1		1-02 *			K3-6			SOURCE				398
ILL INSTR	L			1								9-5/8		398
IN	H	D09H1		1-01 *			DD		1	SOURCE	N	3-4/8		399
IN	H	E09M1		1-02 *			DD			SOURCE				399
IN	H			1								3-4/8		399
INH PS CLK 1	L	D02E2	D06K1	1-01 *			KE-5		2	SOURCE	N	2-5/8		400
INH PS CLK 1	L	D06K1		1-02 *					1		N	4-7/8		400
INH PS CLK 1	L	E08P2		1-03 *			KT-2							400
INH PS CLK 1	L			1								7-4/8		400
INH PS CLK 2	L	C08M2	D06J1	1-01 *			KT-2		1	SOURCE	N	3-7/8		401
INH PS CLK 2	L	D06J1		1-02 *										401
INH PS CLK 2	L			1								3-7/8		401
INIT	H	B06F1		1-01 *			K5-468		1	SOURCE (K5=8)	N	7-3/8		402
INIT	L	D07R2		1-02 *			K4-35							402
INIT	H			1								7-3/8		402
INIT*RESET	H	A06V2					K5-8			SOURCE			1-PIN RUN	403
INIT1	L	F06A1					K5-2468			SOURCE (K5=8)			1-PIN RUN	404
INIT2	L	A04K1	A06T2	1-01 *	2		K4-3		2		N	2-3/8		405
INIT2	L	A06T2		1-02 *			K5-8		1	SOURCE	N	12-5/8		405
INIT2	L	F07F1		1-03 *			K4-4							405
INIT2	L			1								15-0/8		405
INTR (1)	H	B07J1		1-01 *			K4-4		1		N	3-5/8		406
INTR (1)	H	C06K1		1-02 *			K5-4			SOURCE				406
INTR (1)	H			1								3-5/8		406
INTR A	H	D09J1		1-01 *			DD		1	SOURCE	N	6-3/8		407
INTR A	H	E09H1		1-02 *			DD							407
INTR A	H			1								6-3/8		407
INTR B	H	C09J1		1-01 *			DD		1	SOURCE	N	8-5/8		408
INTR B	H	E09K2		1-02 *			DD							408
INTR B	H			1								8-5/8		408
INTR ENB A	H	D09H1		1-01 *			DD		1	SOURCE	N	6-5/8		409
INTR ENB A	H	E09V1		1-02 *			DD							409
INTR ENB A	H			1								6-5/8		409
INTR ENB B	H	C09L1		1-01 *			DD		1	SOURCE	N	8-1/8		410
INTR ENB B	H	E09B2		1-02 *			DD							410
INTR ENB B	H			1								8-1/8		410
IOT	L	C06H2		1-01 *			K5-5		1		N	3-7/8		411
IOT	L	D05K2		1-02 *			K3-6			SOURCE				411
IOT	L			1								3-7/8		411

KD11A.N WRAPD .V35(1Ø2)-1 Ø3-JUN-77 27-Oct-77 16:17 PAGE 38

RUN NAME	A/P	PIN NAME	ORDER PIN	BAY - ORDER	Q	DRAW OPT	RV RG Y	X	Z	REMARKS	NC FLAG	LENGTH	EXCEPTIONS	RUN NUMBER
IR(Ø2:ØØ)=6	L	EØ5M2		1-Ø1 *			K3-4		1		N	1-7/8		412
IR(Ø2:ØØ)=6	L	EØ8L1		1-Ø2 *			KT-9							412
IR(Ø2:ØØ)=6	L			1								1-7/8		412
IR(Ø8:Ø6)=Ø	L	CØ1C1		1-Ø1 *			KF-4		1		N	5		413
IR(Ø8:Ø6)=Ø	L	DØ5E2		1-Ø2 *			K3-3			SOURCE				413
IR(Ø8:Ø6)=Ø	L			1								5-Ø/8		413
IR(Ø8:Ø6)=6	L	DØ5F2		1-Ø1 *	1		K3-3		1	SOURCE	N	4-1/8		414
IR(Ø8:Ø6)=6	L	EØ8H1		1-Ø2 *			KT-9							414
IR(Ø8:Ø6)=6	L			1								4-1/8		414
IR(14:12)=Ø	L	AØ5D2		1-Ø1 *			K3-356		1	SOURCE	N	9-1/8		415
IR(14:12)=Ø	L	DØ6V2		1-Ø2 *			K5-3							415
IR(14:12)=Ø	L			1								9-1/8		415
IR(14:12)=7	H	BØ5E2		1-Ø1 *			K3-6		1		N	4-7/8		416
IR(14:12)=7	H	CØ2H1		1-Ø2 *			KE-4							416
IR(14:12)=7	H			1								4-7/8		416
IRØØ (1)	H	FØ4M1		1-Ø1 *			K1-8		2		N	1-1/8		417
IRØØ (1)	H	FØ5N1		1-Ø2 *			K3-34		1	SOURCE	N	2-3/8		417
IRØØ (1)	H	FØ8L2		1-Ø3 *			KT-7							417
IRØØ (1)	H			1								3-4/8		417
IRØ1 (1)	H	FØ4F2		1-Ø1 *			K1-8		1		N	Ø-1/8		418
IRØ1 (1)	H	FØ5E1		1-Ø2 *			K3-346		2	SOURCE	N	2		418
IRØ1 (1)	H	FØ8E1		1-Ø3 *			KT-7							418
IRØ1 (1)	H			1								2-1/8		418
IRØ2 (1)	H	FØ4C1		1-Ø1 *			K1-8		2		N	1-1/8		419
IRØ2 (1)	H	FØ5D1		1-Ø2 *			K3-34		1	SOURCE	N	2-1/8		419
IRØ2 (1)	H	FØ8E2		1-Ø3 *			KT-7							419
IRØ2 (1)	H			1								3-2/8		419
IRØ3 (1)	H	CØ2J2		1-Ø1 *			KE-4		1		N	1-7/8		420
IRØ3 (1)	H	CØ5S1		1-Ø2 *			K3-235		2	SOURCE (K3-3)	N	3-1/8		420
IRØ3 (1)	H	DØ1K2		1-Ø3 *			KF-4		1		N	6-7/8		420
IRØ3 (1)	H	FØ8H2		1-Ø4 *			KT-7							420
IRØ3 (1)	H			1								11-7/8		420
IRØ4 (1)	H	BØ2J2		1-Ø1 *			KE-4		1		N	6-1/8		421
IRØ4 (1)	H	DØ1J2		1-Ø2 *			KF-4		2		N	4-1/8		421
IRØ4 (1)	H	FØ5H1		1-Ø3 *			K3-2356		1	SOURCE (K3-3)	N	5-3/8		421
IRØ4 (1)	H	FØ8M2		1-Ø4 *			KT-7							421
IRØ4 (1)	H			1								15-5/8		421
IRØ5 (1)	H	BØ2J1		1-Ø1 *			KE-4		1		N	6-3/8		422
IRØ5 (1)	H	DØ1K1		1-Ø2 *			KF-4		2		N	4		422
IRØ5 (1)	H	FØ5K1		1-Ø3 *			K3-2356		1	SOURCE (K3-3)	N	4-5/8		422
IRØ5 (1)	H	FØ8J1		1-Ø4 *			KT-7							422
IRØ5 (1)	H			1								15-Ø/8		422

KD11A.N WRAPD .V35(1Ø2)-1 Ø3-JUN-77 27-Oct-77 16:17 PAGE 39

RUN NAME	A/P	PIN NAME	ORDER PIN	BAY - ORDER	Q	DRAW OPT	RV RG Y	X	Z	REMARKS	NC FLAG	LENGTH	EXCEPTIONS	RUN NUMBER
IRØ6 (1)	H	DØ5R1		1-Ø1 *			K3-3456		1	SOURCE (K3-3)	N	5-7/8		423
IRØ6 (1)	H	FØ4N1		1-Ø2 *			K1-8		2		N	2-4/8		423
IRØ6 (1)	H	FØ8N1		1-Ø3 *			KT-7							423
IRØ6 (1)	H			1								8-3/8		423
IRØ7 (1)	H	DØ5M2		1-Ø1 *			K3-3456		1	SOURCE (K3-3)	N	5-5/8		424
IRØ7 (1)	H	FØ4H2		1-Ø2 *			K1-8		2		N	2-5/8		424
IRØ7 (1)	H	FØ8M1		1-Ø3 *			KT-7							424
IRØ7 (1)	H			1								8-2/8		424
IRØ8 (1)	H	CØ5K1		1-Ø1 *			K3-3456		2	SOURCE (K3-3)	N	4-7/8		425
IRØ8 (1)	H	DØ6T2		1-Ø2 *			K5-3		1		N	5-3/8		425
IRØ8 (1)	H	FØ4D1		1-Ø3 *			K1-8		2		N	3-6/8		425
IRØ8 (1)	H	FØ8S2		1-Ø4 *			KT-7							425
IRØ8 (1)	H			1								14-Ø/8		425
IRØ9 (1)	H	BØ2L2		1-Ø1 *			KE-4		2		N	4-1/8		426
IRØ9 (1)	H	CØ5L1		1-Ø2 *			K3-345		1	SOURCE (K3-3)	N	9-7/8		426
IRØ9 (1)	H	FØ8L1		1-Ø3 *			KT-7							426
IRØ9 (1)	H			1								14-Ø/8		426
IR1Ø (1)	H	AØ2N2		1-Ø1 *			KE-4		2		N	5-5/8		427
IR1Ø (1)	H	CØ5C1		1-Ø2 *			K3-345		1	SOURCE (K3-3)	N	11-7/8		427
IR1Ø (1)	H	FØ8T2		1-Ø3 *			KT-7							427
IR1Ø (1)	H			1								17-4/8		427
IR11 (1)	H	AØ2T2		1-Ø1 *			KE-4		2		N	5-1/8		428
IR11 (1)	H	CØ5R1		1-Ø2 *			K3-345		1	SOURCE (K3-3)	N	11-7/8		428
IR11 (1)	H	FØ8U2		1-Ø3 *			KT-7							428
IR11 (1)	H			1								17-Ø/8		428
IR12 (1)	H	BØ5S1		1-Ø1 *	1		K3-34		1	SOURCE (K3-3)	N	12-3/8		429
IR12 (1)	H	FØ8N2		1-Ø2 *			KT-7							429
IR12 (1)	H			1								12-3/8		429
IR13 (1)	H	BØ5L1		1-Ø1 *			K3-34		1	SOURCE (K3-3)	N	12-7/8		430
IR13 (1)	H	FØ8P2		1-Ø2 *			KT-7							430
IR13 (1)	H			1								12-7/8		430
IR14 (1)	H	BØ5K1		1-Ø1 *			K3-34		1	SOURCE (K3-3)	N	11-1/8		431
IR14 (1)	H	FØ8V2		1-Ø2 *			KT-7							431
IR14 (1)	H			1								11-1/8		431
IR15	H	BØ5P2		1-Ø1 *			K3-2479		1	SOURCE (K3-4)	N	5-3/8		432
IR15	H	DØ6L1		1-Ø2 *			K5-3							432
IR15	H			1								5-3/8		432
IR15	L	AØ5R1		1-Ø1 *			K3-469		1	SOURCE (K3-4)	N	7-5/8		433
IR15	L	CØ2H2		1-Ø2 *			KE-4		2		N	5-5/8		433
IR15	L	DØ6M2		1-Ø3 *			K5-3							433
IR15	L			1								13-2/8		433
IR15 (1)	H	CØ5M1					K3-345			SOURCE (K3-3)			1-PIN RUN	434

RUN NAME	A/P	PIN NAME	ORDER PIN	BAY - ORDER	Q	DRAW OPT	RV RG Y	X	Z	REMARKS	NC FLAG	LENGTH	EXCEPTIONS	RUN NUMBER
IR=075XXX	L	A02U2		1-01 *			KE-4		1	SOURCE	N	8-1/8		435
IR=075XXX	L	D01L1		1-02 *			KF-4							435
IR=075XXX	L			1								8-1/8		435
JAM CLK	H	E07B1					K4-23			SOURCE (K4-3)			1-PIN RUN	436
JAMUPP	H	C06T2		1-01 *			K5-4		1		N	6-5/8		437
JAMUPP	H	F07A1		1-02 *			K4-23			SOURCE (K4-3)				437
JAMUPP	H			1								6-5/8		437
JAMUPP	L	D03S2	A03V1	1-01 *		1	K2-5678		1		N	8-1/8		438
JAMUPP	L	A03V1		1-02 *			K2-3		2		N	6-1/8		438
JAMUPP	L	C06L1		1-03 *			K5-4		1		N	8-1/8		438
JAMUPP	L	F07E1		1-04 *			K4-3			SOURCE				438
JAMUPP	L			1								22-3/8		438
JBERR (0)	H	E07L1					K4-3			SOURCE			1-PIN RUN	439
JPUE (0)	H	E06T2		1-01 *			K5-8		1		N	11-3/8		440
JPUE (0)	H	F07T2		1-02 *			K4-3			SOURCE				440
JPUE (0)	H			1								11-3/8		440
KT INSTR	L	D05B1		1-01 *			K3-5		1		N	5-5/8		441
KT INSTR	L	E08N1		1-02 *			KT-7			SOURCE				441
KT INSTR	L			1								5-5/8		441
KTSR16	L	B06B2		1-01 *			K5-7		1		N	4-3/8		442
KTSR16	L	C08K1		1-02 *			KT-9			SOURCE				442
KTSR16	L			1								4-3/8		442
KTSR17	L	A06P2		1-01 *			K5-7		1		N	7-5/8		443
KTSR17	L	C08D2		1-02 *			KT-9			SOURCE				443
KTSR17	L			1								7-5/8		443
LOAD PS	L	B05K2		1-01 *			K3-9		1		N	6-3/8		444
LOAD PS	L	D06P1		1-02 *			K5-2			SOURCE				444
LOAD PS	L			1								6-3/8		444
LTC	L	E03R1	C09D1	1-01 *		1	KW-2		1		N	12-5/8		445
LTC	L	C09D1		1-02 *			DD							445
LTC	L			1								12-5/8		445
MCLK	L	F01D1		1-01 *		1	KM-2		1	SOURCE	N	3-7/8		446
MCLK	L	F07V2		1-02 *			K4-2							446
MCLK	L			1								3-7/8		446
MCLK ENABLE	L	C06S2	E07N1	1-01 *			K5-5		2		N	5-5/8		447
MCLK ENABLE	L	E07N1		1-02 *			K4-26		1		N	5-5/8		447
MCLK ENABLE	L	F01V2		1-03 *			KM-2			SOURCE				447
MCLK ENABLE	L			1								11-2/8		447
MFP SMO	L	D06V1		1-01 *			K5-5		1		N	3-1/8		448
MFP SMO	L	E08C1		1-02 *			KT-9			SOURCE				448
MFP SMO	L			1								3-1/8		448

RUN NAME	A/P	PIN NAME	ORDER PIN	BAY - ORDER	Q	DRAW OPT	RV RG Y	X	Z	REMARKS	NC FLAG	LENGTH	EXCEPTIONS	RUN NUMBER
MFPI (1)	H	E08U2					KT-7			SOURCE			1-PIN RUN	449
MODE SEL1	H	E04U1		1-01 *		1	K1-8		1		N	3-2/8		450
MODE SEL1	H	E08A1		1-02 *			KT-2			SOURCE				450
MODE SEL1	H			1								3-2/8		450
MSR[illegible]	L	A02L2		1-01 *			KE-5		1		N	9-1/8		451
MSR[illegible]	L	D01M2		1-02 *			KF-2			SOURCE				451
MSR[illegible]	L			1								9-1/8		451
MSR[illegible] (1)	H	A02F2		1-01 *			KE-5		1		N	9-7/8		452
MSR[illegible] (1)	H	D01P2		1-02 *			KF-2		2	SOURCE	N	2-2/8		452
MSR[illegible] (1)	H	E01H2		1-03 *			KM-2							452
MSR[illegible] (1)	H			1								12-1/8		452
MSR[illegible]1 (1)	H	E01K2		1-01 *			KF-24		1	SOURCE (KF-2)	N	8-1/8		453
MSR[illegible]1 (1)	H	E01J2		1-02 *			KM-2							453
MSR[illegible]1 (1)	H			1								8-1/8		453
MSY[illegible] (1)	H	E07D1		1-01 *			K4-246		2	SOURCE (K4-4)	N	9-7/8		454
MSY[illegible] (1)	H	F08P2		1-02 *			KT-2		1		N	0-1/8		454
MSY[illegible] (1)	H	E08D2		1-03 *			KT-256							454
MSY[illegible] (1)	H			1								10-0/8		454
MSY[illegible]	L	A07B1					K4-4			SOURCE			1-PIN RUN	455
MSY[illegible] (1)	H	A07K1					K4-4			SOURCE			1-PIN RUN	456
MTR1 (1)	H	E08T2					KT-7			SOURCE			1-PIN RUN	457
NOE	L	C02D1					KE-245			SOURCE (KF-4)			1-PIN RUN	458
N DATA	L	B05D1		1-01 *			K3-9		1		N	9-7/8		459
N DATA	L	E06S1		1-02 *			K5-2			SOURCE				459
N DATA	L			1								9-7/8		459
NO HSTOP	L	E07S1		1-01 *			K4-2		1		N	4-1/8		460
NO HSTOP	L	F01R2		1-02 *			KM-2			SOURCE				460
NO HSTOP	L			1								4-1/8		460
NO MSYN	L	A07C1		1-01 *			K4-4		1		N	10-5/8		461
NO MSYN	L	D08R2		1-02 *			KT-6			SOURCE				461
NO MSYN	L			1								10-5/8		461
NODAT (2)	H	C06D2		1-01 *			K5-4		1		N	4-7/8		462
NODAT (2)	H	D07S2		1-02 *			K4-346			SOURCE (K4-6)				462
NODAT (2)	H			1								4-7/8		462
NOSAC (1)	H	D07P2					K4-6			SOURCE			1-PIN RUN	463
NPR (2)	H	D07B1					K4-56			SOURCE (K4-5)			1-PIN RUN	464
ODA ERR	L	C06C1		1-01 *			K5-4		1		N	8-1/8		465
ODA ERR	L	E07U2		1-02 *			K4-34			SOURCE (K4-4)				465
ODA ERR	L			1								8-1/8		465

RUN NAME	A/P	PIN NAME	ORDER PIN	BAY - ORDER	Q	DRAW OPT	RV	RG	Y	X	Z	REMARKS	NC FLAG	LENGTH	EXCEPTIONS	RUN NUMBER
OUT HIGH	H	D09K1		1-01 *			DD				1	SOURCE	N	3-3/8		466
OUT HIGH	H	E09M2		1-02 *			DD					SOURCE				466
OUT HIGH	H			1										3-3/8		466
OUT LOW	H	D09D1		1-01 *			DD				1	SOURCE	N	4		467
OUT LOW	H	F09N1		1-02 *			DD					SOURCE				467
OUT LOW	H			1										4-0/8		467
OVFL	H	A02V2		1-01 *			KE-4				1		N	7-5/8		468
OVFL	H	D01H2	E01E1	1-02 *			KF-4				2	SOURCE	N	2-7/8		468
OVFL	H	F01E1		1-03 *			KM-2									468
OVFL	H			1										10-4/8		468
OVFLW ERR	L	F06M1		1-01 *			K5-4				1		N	9-3/8		469
OVFLW ERR	L	E07S2		1-02 *			K4-34					SOURCE (K4-4)				469
OVFLW ERR	L			1										9-3/8		469
OVFLW IPR	L	F03R2					KJ-2								1-PIN RUN	470
OVLAP (1)	H	C06S1		1-01 *			K5-4				2	SOURCE	N	2-3/8		471
OVLAP (1)	H	D07D1		1-02 *			K4-5				1		N	3-7/8		471
OVLAP (1)	H	E05D1		1-03 *			K3-7				2		N	4-7/8		471
OVLAP (1)	H	F07J2		1-04 *			K4-2									471
OVLAP (1)	H			1										11-1/8		471
OVLAP CYCLE	L	A07N1		1-01 *			K4-4				1		N	6-7/8		472
OVLAP CYCLE	L	C05F1		1-02 *			K3-4					SOURCE				472
OVLAP CYCLE	L			1										6-7/8		472
OVLAP INSTR	H	C05F1		1-01 *			K3-4				1	SOURCE	N	2-5/8		473
OVLAP INSTR	H	D06E2		1-02 *			K5-4									473
OVLAP INSTR	H			1										2-5/8		473
P BUT 37	H	C06R2					K5-46					SOURCE (K5-6)			1-PIN RUN	474
P CLK UPPR	H	B03R1		1-01 *			K4-2				1		N	5-3/8		475
P CLK UPPR	H	C02V1		1-02 *			KE-5					SOURCE				475
P CLK UPPR	H			1										5-3/8		475
P CLK MSYN	L	E07K2		1-01 *	1		K4-45				1	SOURCE (K4-4)	N	7-1/8		476
P CLK MSYN	L	D08V1		1-02 *			KT-9									476
P CLK MSYN	L			1										7-1/8		476
P END	H	C02R1		1-01 *			KE-59				1		N	4		477
P END	H	D07P1	E04F2	1-02 *			K4-2				2	SOURCE	N	2-6/8		477
P END	H	E04F2		1-03 *			K1-9									477
P END	H			1										6-6/8		477
P ENDRESET	L	F06J1		1-01 *			K5-8				1	SOURCE	N	11-7/8		478
P ENDRESET	L	E07N1		1-02 *			K4-2									478
P ENDRESET	L			1										11-7/8		478
P ESTART	L	F07M2					K4-2								1-PIN RUN	479
P JAMSTART	H	D07L1					K4-236					SOURCE (K4-3)			1-PIN RUN	480

RUN NAME	A/P	PIN NAME	ORDER PIN	BAY - ORDER	Q	DRAW OPT	RV	RG	Y	X	Z	REMARKS	NC FLAG	LENGTH	EXCEPTIONS	RUN NUMBER
P JAMSTART	L	F07P1					K4-3					SOURCE (K4-3)			1-PIN RUN	481
P MATCH	L	E04F2					K1-9					SOURCE			1-PIN RUN	482
P MSYN	L	D07K2					K4-5					SOURCE			1-PIN RUN	483
P NO SACK	L	C07J1					K4-5					SOURCE			1-PIN RUN	484
P1	H	A01J2		1-01 *			KF-4				2		N	4-7/8		485
P1	H	B02V2		1-02 *			KE-5				1		N	5-7/8		485
P1	H	D06D2		1-03 *			K5-4				2		N	3-7/8		485
P1	H	E07D1		1-04 *			K4-2					SOURCE				485
P1	H			1										14-5/8		485
P2	H	B02V1		1-01 *			KE-5				2		N	3-7/8		486
P2	H	C06J2		1-02 *			K5-4				1		N	6-7/8		486
P2	H	E07R2	B07B1	1-03 *			K4-2				2	SOURCE	N	9-7/8		486
P2	H	B07F1	D08U1	1-04 *			K4-4				1		N	7-7/8		486
P2	H	D08U1		1-05 *			KT-9									486
P2	H			1										28-4/8		486
P3	H	C02C1		1-01 *			KE-5				2		N	3-5/8		487
P3	H	C06M2		1-02 *			K5-48				1		N	5-3/8		487
P3	H	E07F1		1-03 *			K4-25					SOURCE (K4-2)				487
P3	H			1										9-0/8		487
PART GRANT HI	H	C07L1					K4-5					SOURCE			1-PIN RUN	488
PART P END	H	A06P2		1-01 *			K5-6				1		N	8-1/8		489
PART P END	H	C02U2		1-02 *			KE-5				2		N	3-7/8		489
PART P END	H	D07R1		1-03 *			K4-2					SOURCE				489
PART P END	H			1										12-0/8		489
PASTA (1)	H	A05V2		1-01 *			K3-9				1		N	10-3/8		490
PASTA (1)	H	E06P1		1-02 *			K5-2					SOURCE				490
PASTA (1)	H			1										10-3/8		490
PASTB	H	A05R1		1-01 *			K3-9				1		N	10-7/8		491
PASTB	H	E06K2		1-02 *			K5-2					SOURCE				491
PASTB	H			1										10-7/8		491
PASTC (0)	H	A05A1		1-01 *			K3-9				1		N	12-7/8		492
PASTC (0)	H	E06M1		1-02 *			K5-2					SOURCE				492
PASTC (0)	H			1										12-7/8		492
PBA06	H	A08P1		1-01 *			KT-4				1	SOURCE	N	9-7/8		493
PBA06	H	F08E2		1-02 *			KT-6				2		N	5-1/8		493
PBA06	H	E01P1		1-03 *			KM-2									493
PBA06	H			1										15-0/8		493
PBA07	H	A08P2		1-01 *	1		KT-4				1	SOURCE	N	10-5/8		494
PBA07	H	E08L2		1-02 *			KT-6				2		N	4-3/8		494
PBA07	H	E01K1		1-03 *			KM-2									494
PBA07	H			1										15-0/8		494

RUN NAME	A/P	PIN NAME	ORDER PIN	BAY - ORDER	Q	DRAW	PV RG Y OPT	X	Z	REMARKS	NC FLAG	LENGTH	EXCEPTIONS	RUN NUMBER
PBA08	H	A08N1		1-01 *	1		KT-4		1	SOURCE	N	10-1/8		495
PBA08	H	E08D2		1-02 *			KT-6		2		N	5-3/8		495
PBA08	H	E01S2		1-03 *			KM-2							495
PBA08	H			1								15-4/8		495
PBA09	H	A08M2		1-01 *	1		KT-4		1	SOURCE	N	9-3/8		496
PBA09	H	D08V2		1-02 *			KT-6		2		N	6-1/8		496
PBA09	H	E01P1		1-03 *			KM-2							496
PBA09	H			1								15-4/8		496
PBA10	H	B08R1		1-01 *			KT-4		1	SOURCE	N	12-5/8		497
PBA10	H	E01L1		1-02 *			KM-2							497
PBA10	H			1								12-5/8		497
PBA11	H	A08V2		1-01 *			KT-4		1	SOURCE	N	8-3/8		498
PBA11	H	D08U2		1-02 *			KT-6		2		N	5-1/8		498
PBA11	H	F01F1		1-03 *			KM-2							498
PBA11	H			1								13-4/8		498
PBA12	H	A08T2		1-01 *			KT-4		1	SOURCE	N	13-5/8		499
PBA12	H	E01J1		1-02 *			KM-2							499
PBA12	H			1								13-5/8		499
PBA13	H	A08U2		1-01 *			KT-4		1	SOURCE	N	12-7/8		500
PBA13	H	E01C1		1-02 *			KM-2							500
PBA13	H			1								12-7/8		500
PBA14	H	B08S1		1-01 *			KT-4		1	SOURCE	N	11-3/8		501
PBA14	H	E01T2		1-02 *			KM-2							501
PBA14	H			1								11-3/8		501
PBA15	H	C08A1		1-01 *			KT-4		1	SOURCE	N	9-7/8		502
PBA15	H	F01K2		1-02 *			KM-2							502
PBA15	H			1								9-7/8		502
PBA16	H	B08U2		1-01 *			KT-4		1	SOURCE	N	11-1/8		503
PBA16	H	E01M1		1-02 *			KM-2							503
PBA16	H			1								11-1/8		503
PBA17	H	B08S2		1-01 *			KT-4		1	SOURCE	N	12-1/8		504
PBA17	H	E01V1		1-02 *			KM-2							504
PBA17	H			1								12-1/8		504
PERIF RELEASE	H	D07A1					K4-25			SOURCE (K4-5)			1-PIN RUN	505
PERR (0)	H	B07U1		1-01 *			K4-3		1	SOURCE	N	11-3/8		506
PERR (0)	H	F06V1		1-02 *			K5-5							506
PERR (0)	H			1								11-3/8		506
PRIV INSTR	L	E05M1		1-01 *			K3-6		1	SOURCE	N	4-7/8		507
PRIV INSTR	L	F08P1		1-02 *			KT-7							507
PRIV INSTR	L			1								4-7/8		507
PROC RELEASE	L	A07N2					K4-45			SOURCE (K4-5)			1-PIN RUN	508

RUN NAME	A/P	PIN NAME	ORDER PIN	BAY - ORDER	Q	DRAW	PV RG Y OPT	X	Z	REMARKS	NC FLAG	LENGTH	EXCEPTIONS	RUN NUMBER
PROC RESPOND	H	A07S1					K4-6			SOURCE			1-PIN RUN	509
PS ADRS	H	A07P2		1-01 *			K4-6		1		N	9-1/8		510
PS ADRS	H	D06S2		1-02 *			K5-2		2		N	2		510
PS ADRS	H	E04D1		1-03 *			K1-7		1	SOURCE	N	2-7/8		510
PS ADRS	H	E08F2		1-04 *			KT-6		2	SOURCE	N	2-5/8		510
PS ADRS	H	F05V2		1-05 *			K3-7							510
PS ADRS	H			1								16-5/8		510
PS(C)	H	A05P2		1-01 *			K3-89		1		N	3-7/8		511
PS(C)	H	E04R1		1-02 *			K1-5		2		N	5-5/8		511
PS(C)	H	D06F1		1-03 *			K5-2		1	SOURCE	N	8-7/8		511
PS(C)	H	F01P2		1-04 *			KM-2							511
PS(C)	H			1								18-3/8		511
PS(C) (1)	H	A05D1		1-01 *			K3-8		1		N	14-3/8		512
PS(C) (1)	H	F06H1		1-02 *			K5-23		2	SOURCE (K5-2)	N	2-7/8		512
PS(C) (1)	H	F01E2		1-03 *			KM-2							512
PS(C) (1)	H			1								17-2/8		512
PS(P FM BUS)	H	B07F1		1-01 *			K4-6		1	SOURCE	N	8-5/8		513
PS(P FM BUS)	H	E06F1		1-02 *			K5-2							513
PS(P FM BUS)	H			1								8-5/8		513
PS(P1+P3)	H	E07D1		1-01 *			K4-2		2	SOURCE	N	1		514
PS(P1+P3)	H	E06D1		1-02 *			K5-2		1		N	2-2/8		514
PS(P1+P3)	H	E08S2		1-03 *			KT-29							514
PS(P1+P3)	H			1								3-2/8		514
PS(T) (1)	H	E05S2		1-01 *			K3-7		2		N	2-7/8		515
PS(T) (1)	H	F06J2		1-02 *			K5-2		1	SOURCE	N	3		515
PS(T) (1)	H	F01J2		1-03 *			KM-2							515
PS(T) (1)	H			1								5-7/8		515
PS(V) (1)	H	E06L1		1-01 *			K5-23		1	SOURCE (K5-2)	N	3-6/8		516
PS(V) (1)	H	F01F2		1-02 *			KM-2							516
PS(V) (1)	H			1								3-6/8		516
PS(Z) (1)	H	E06M1		1-01 *			K5-23		1	SOURCE (K5-2)	N	3-7/8		517
PS(Z) (1)	H	F01H1		1-02 *			KM-2							517
PS(Z) (1)	H			1								3-7/8		517
PS05 (1)	H	B07P1		1-01 *			K4-6		1		N	7-5/8		518
PS05 (1)	H	F06F1		1-02 *			K5-2			SOURCE				518
PS05 (1)	H			1								7-5/8		518
PS06 (1)	H	C07K2		1-01 *			K4-6		1		N	8-1/8		519
PS06 (1)	H	F06R1		1-02 *			K5-2			SOURCE				519
PS06 (1)	H			1								8-1/8		519
PS07 (1)	H	B07R2		1-01 *			K4-6		1		N	8-5/8		520
PS07 (1)	H	E06P2		1-02 *			K5-2			SOURCE				520
PS07 (1)	H			1								8-5/8		520
PS12 (1)	H	C08U1					KT-2			SOURCE			1-PIN RUN	521

RUN NAME	A/P	PIN NAME	ORDER PIN	BAY - ORDER	Q	DRAW OPT	RV RG Y	X	Z	REMARKS	NC FLAG	LENGTH	EXCEPTIONS	RUN NUMBER
PS13 (1)	H	E08K2					KT-2			SOURCE			1-PIN RUN	522
PS14 (1)	H	E08B1					KT-2			SOURCE			1-PIN RUN	523
PS15	L	C06B2		1-01 *			K5-7		1		N	2-2/8		524
PS15	L	C08N1		1-02 *			KT-9			SOURCE				524
PS15	L			1								2-2/8		524
PS15 (0)	H	A07S2		1-01 *			K4-4		1		N	7-3/8		525
PS15 (0)	H	D08E1		1-02 *			KT-2		2	SOURCE	N	2		525
PS15 (0)	H	D05L2		1-03 *			K3-6							525
PS15 (0)	H			1								9-3/8		525
PTRD (0)	H	C07E1					K4-5			SOURCE			1-PIN RUN	526
PTRD (1)	H	B07V2					K4-56			SOURCE (K4-5)			1-PIN RUN	527
PUPPM (1)	H	A03T2		1-01 *			K2-2		1	SOURCE	N	14-5/8		528
PUPPM (1)	H	F01P1		1-02 *			KM-2							528
PUPPM (1)	H			1								14-5/8		528
PUPF1 (1)	H	A03M2		1-01 *			K2-2		1	SOURCE	N	14-5/8		529
PUPF1 (1)	H	F01L1		1-02 *			KM-2							529
PUPF1 (1)	H			1								14-5/8		529
PUPF2 (1)	H	A03R2		1-01 *			K2-2		1	SOURCE	N	13-7/8		530
PUPF2 (1)	H	F01F1		1-02 *			KM-2							530
PUPF2 (1)	H			1								13-7/8		530
PUPF3 (1)	H	A03M2		1-01 *			K2-2		1	SOURCE	N	14-3/8		531
PUPF3 (1)	H	F01J1		1-02 *			KM-2							531
PUPF3 (1)	H			1								14-3/8		531
PUPF4 (1)	H	F03S2		1-01 *			K2-3		1	SOURCE	N	10-5/8		532
PUPF4 (1)	H	F01C1		1-02 *			KM-2							532
PUPF4 (1)	H			1								10-5/8		532
PUPF5 (1)	H	F03N2		1-01 *			K2-3		1	SOURCE	N	12-3/8		533
PUPF5 (1)	H	F01T2		1-02 *			KM-2							533
PUPF5 (1)	H			1								12-3/8		533
PUPF6 (1)	H	F03L2		1-01 *			K2-3		1	SOURCE	N	11-7/8		534
PUPF6 (1)	H	F01K2		1-02 *			KM-2							534
PUPF6 (1)	H			1								11-7/8		534
PUPF7 (1)	H	F03H2		1-01 *			K2-3		1	SOURCE	N	12-5/8		535
PUPF7 (1)	H	F01N1		1-02 *			KM-2							535
PUPF7 (1)	H			1								12-5/8		535
PUPF8 (1)	H	F03K2		1-01 *			K2-3		1	SOURCE	N	13-1/8		536
PUPF8 (1)	H	F01V1		1-02 *			KM-2							536
PUPF8 (1)	H			1								13-1/8		536
PWR RESTART	H	E06H1		1-01 *			K5-8		1	SOURCE	N	12-3/8		537
PWR RESTART	H	E07F2		1-02 *			K4-3							537
PWR RESTART	H			1								12-3/8		537

RUN NAME	A/P	PIN NAME	ORDER PIN	BAY - ORDER	Q	DRAW OPT	RV RG Y	X	Z	REMARKS	NC FLAG	LENGTH	EXCEPTIONS	RUN NUMBER
PWRDN (0)	H	C05N1		1-01 *			K3-47		1		N	1-4/8		538
PWRDN (0)	H	C06F2		1-02 *			K5-48			SOURCE (K5-4)				538
PWRDN (0)	H			1								1-4/8		538
PWRUP INIT	L	E06H2		1-01 *			K5-8		1	SOURCE	N	12-3/8		539
PWRUP INIT	L	F07R2		1-02 *			K4-3							539
PWRUP INIT	L			1								12-3/8		539
R(X6+X7)	H	A05C1		1-01 *			K3-8		2		N	7-5/8		540
R(X6+X7)	H	C07J2		1-02 *			K4-4		1		N	8-1/8		540
R(X6+X7)	H	F04P1		1-03 *			K1-8			SOURCE				540
R(X6+X7)	H			1								15-6/8		540
RADPSO	L	A04F1		1-01 *			K1-8		1	SOURCE	N	7-5/8		541
RADPSO	L	C07K1		1-02 *			K4-4							541
RADPSO	L			1								7-5/8		541
RD07	H	C04V2		1-01 *	1		K1-3		1	SOURCE	N	5-5/8		542
RD07	H	E06M2		1-02 *			K5-2							542
RD07	H			1								5-5/8		542
RD15	H	F04D1		1-01 *			K1-5		1	SOURCE	N	10-1/8		543
RD15	H	F06L2		1-02 *			K5-2							543
RD15	H			1								10-1/8		543
REG ADRS	H	D08S2		1-01 *			KT-6		2	SOURCE	N	2-7/8		544
REG ADRS	H	D04U1		1-02 *			K1-7		1	SOURCE	N	5-5/8		544
REG ADRS	H	F05L2		1-03 *			K3-2							544
REG ADRS	H			1								8-4/8		544
RELOCATE ERR	L	A06V1		1-01 *			K5-7		1		N	5-5/8		545
RELOCATE ERR	L	C08L1		1-02 *			KT-9			SOURCE				545
RELOCATE ERR	L			1								5-5/8		545
RIF0 (0)	H	C03A1		1-01 *			K2-4		1	SOURCE	N	7-7/8		546
RIF0 (0)	H	F04P2		1-02 *			K1-8							546
RIF0 (0)	H			1								7-7/8		546
RIF0 (1)	H	E03T2		1-01 *			K2-4		1	SOURCE	N	10-1/8		547
RIF0 (1)	H	F04K1		1-02 *			K1-8							547
RIF0 (1)	H			1								10-1/8		547
RIF1 (1)	H	E03U2		1-01 *			K2-4		1	SOURCE	N	9-7/8		548
RIF1 (1)	H	F04F2		1-02 *			K1-8							548
RIF1 (1)	H			1								9-7/8		548
RIF2 (1)	H	E03U1		1-01 *			K2-4		1	SOURCE	N	10-1/8		549
RIF2 (1)	H	F04D2		1-02 *			K1-8							549
RIF2 (1)	H			1								10-1/8		549
RIF3 (1)	H	E03S1		1-01 *			K2-4		1	SOURCE	N	9-1/8		550
RIF3 (1)	H	F04V1		1-02 *			K1-8							550
RIF3 (1)	H			1								9-1/8		550

RUN NAME	A/P	PIN NAME	ORDER PIN	RAY - ORDER	Q	DRAW OPT	RV	RG	Y	X	Z	REMARKS	NC FLAG	LENGTH EXCEPTIONS	RUN NUMBER
ROMA (1)	H	D08L1		1-01 *			KT-2				1	SOURCE	N	5-2/8	551
ROMA (1)	H	E01P2		1-02 *			KM-2								551
ROMA (1)	H			1										5-2/8	551
ROMB (1)	H	D08M1		1-01 *			KT-2				1	SOURCE	N	5	552
ROMB (1)	H	E01U2		1-02 *			KM-2								552
ROMB (1)	H			1										5-0/8	552
ROMC (1)	H	D08P1		1-01 *			KT-2				1	SOURCE	N	5-1/8	553
ROMC (1)	H	E01D1		1-02 *			KM-2								553
ROMC (1)	H			1										5-1/8	553
ROMD (1)	H	D08S1		1-01 *			KT-2				1	SOURCE	N	5-7/8	554
ROMD (1)	H	E01M1		1-02 *			KM-2								554
ROMD (1)	H			1										5-7/8	554
RSVD INSTR	L	C06F1		1-01 *			K5-5				2		N	3-6/8	555
RSVD INSTR	L	D02C1		1-02 *			KE-5				1		N	4-3/8	555
RSVD INSTR	L	E05C1		1-03 *			K3-6					SOURCE			555
RSVD INSTR	L			1										8-1/8	555
S HOOK	H	F08H2		1-01 *			KT-9				1	SOURCE	N	3-4/8	556
S HOOK	H	F04A1		1-02 *			K1-8								556
S HOOK	H			1										3-4/8	556
SALUW (1)	H	A05F2		1-01 *			K3-8				1		N	8-1/8	557
SALUW (1)	H	C03U2		1-02 *			K2-6					SOURCE			557
SALUW (1)	H			1										8-1/8	557
SALUL (1)	H	A05F1		1-01 *			K3-8				1		N	7-5/8	558
SALUL (1)	H	C03T2		1-02 *			K2-6					SOURCE			558
SALUL (1)	H			1										7-5/8	558
SALU2 (1)	H	A05E1		1-01 *			K3-8				1		N	7-3/8	559
SALU2 (1)	H	C03P2		1-02 *			K2-6					SOURCE			559
SALU2 (1)	H			1										7-3/8	559
SALU3 (1)	H	A05D2		1-01 *			K3-8				1		N	7-5/8	560
SALU3 (1)	H	C03N2		1-02 *			K2-6								560
SALU3 (1)	H			1										7-5/8	560
SALUM (1)	H	A05N1		1-01 *			K3-8				1		N	8-5/8	561
SALUM (1)	H	D03E1		1-02 *			K2-6					SOURCE			561
SALUM (1)	H			1										8-5/8	561
SRAM (1)	H	A04J1		1-01 *			K1-2345				1		N	5-7/8	562
SRAM (1)	H	C03J2		1-02 *			K2-5					SOURCE			562
SRAM (1)	H			1										5-7/8	562
SRC0 (1)	H	D03D1		1-01 *			K2-6				1	SOURCE	N	4-7/8	563
SRC0 (1)	H	E06J1		1-02 *			K5-5								563
SRC0 (1)	H			1										4-7/8	563
SRC1 (1)	H	C03R2		1-01 *			K2-6				1	SOURCE	N	9-7/8	564
SRC1 (1)	H	E06R2		1-02 *			K5-5								564
SRC1 (1)	H			1										9-7/8	564

RUN NAME	A/P	PIN NAME	ORDER PIN	RAY - ORDER	Q	DRAW OPT	RV	RG	Y	X	Z	REMARKS	NC FLAG	LENGTH EXCEPTIONS	RUN NUMBER
SRC2 (1)	H	C03U1		1-01 *			K2-6				1	SOURCE	N	2-3/8	565
SRC2 (1)	H	C06F1		1-02 *			K5-5								565
SRC2 (1)	H			1										2-3/8	565
SRC3 (1)	H	C03S2		1-01 *			K2-6				1	SOURCE	N	9-7/8	566
SRC3 (1)	H	E06S2		1-02 *			K5-5								566
SRC3 (1)	H			1										9-7/8	566
SRC=10	L	E06U1		1-01 *	1		K5-5				1		N	9-3/8	567
SRC=10	L	C08V1		1-02 *			KT-9								567
SRC=10	L			1										9-3/8	567
SRC=16	L	E06V1		1-01 *			K5-5				1	SOURCE	N	2-1/8	568
SRC=16	L	E08J1		1-02 *			KT-9								568
SRC=16	L			1										2-1/8	568
SRMM (1)	H	A04V1		1-01 *			K1-45				1		N	5-3/8	569
SRMM (1)	H	C03M1		1-02 *			K2-5					SOURCE			569
SRMM (1)	H			1										5-3/8	569
SRMM1 (1)	H	A04U1		1-01 *			K1-45				1		N	5-3/8	570
SRMM1 (1)	H	C03M1		1-02 *			K2-5					SOURCE			570
SRMM1 (1)	H			1										5-3/8	570
SRMT (1)	H	C03J1		1-01 *			K2-5				1	SOURCE	N	4-3/8	571
SRMT (1)	H	D04S1		1-02 *			K1-23								571
SRMT (1)	H			1										4-3/8	571
SRMT1 (1)	H	C03T1		1-01 *			K2-5				1	SOURCE	N	4-5/8	572
SRMT1 (1)	H	D04U2		1-02 *			K1-23								572
SRMT1 (1)	H			1										4-5/8	572
SDMM (1)	H	A04M1		1-01 *			K1-2345				1		N	5-5/8	573
SDMM (1)	H	C03K2		1-02 *			K2-5					SOURCE			573
SDMM (1)	H			1										5-5/8	573
SDM1 (1)	H	A04V2		1-01 *			K1-2345				1		N	5-1/8	574
SDM1 (1)	H	C03L2		1-02 *			K2-5					SOURCE			574
SDM1 (1)	H			1										5-1/8	574
SELECT 0	H	D09F1		1-01 *			DD				1		N	4-1/8	575
SELECT 0	H	E09S2		1-02 *			DD					SOURCE			575
SELECT 0	H			1										4-1/8	575
SELECT 2	H	D09J1		1-01 *			DD				1		N	4-1/8	576
SELECT 2	H	E09T2		1-02 *			DD					SOURCE			576
SELECT 2	H			1										4-1/8	576
SELECT 4	H	D09F1		1-01 *			DD				1		N	4-3/8	577
SELECT 4	H	E09R2		1-02 *			DD					SOURCE			577
SELECT 4	H			1										4-3/8	577
SELECT 6	H	D09C1		1-01 *			DD				1		N	4-4/8	578
SELECT 6	H	E09S1		1-02 *			DD					SOURCE			578
SELECT 6	H			1										4-4/8	578

RUN NAME	A/P	PIN NAME	ORDER PIN	BAY = ORDER	Q	DRAW OPT	RV RG Y	X	Z	REMARKS	NC FLAG	LENGTH	EXCEPTIONS	RUN NUMBER
SERVICE	H	E05B1					K3-27			SOURCE (K3-7)			1-PIN RUN	579
SET CLK	L	B06K1		1-01 *			K5-4		1		N	5-7/8		580
SET CLK	L	D07F1		1-02 *			K4-25			SOURCE (K4-2)				580
SET CLK	L			1								5-7/8		580
SET UPP0	L	A03F1		1-01 *	1		K2-2		1		N	16-7/8		581
SET UPP0	L	E07R1		1-02 *			K4-3			SOURCE				581
SET UPP0	L			1								16-7/8		581
SET UPP1	L	A03F1		1-01 *			K2-2		1		N	15-5/8		582
SET UPP1	L	E07E2		1-02 *			K4-3			SOURCE				582
SET UPP1	L			1								15-5/8		582
SET UPP4,3	L	B03C1		1-01 *			K2-23		1		N	14-1/8		583
SET UPP4,3	L	E07M2		1-02 *			K4-3			SOURCE				583
SET UPP4,3	L			1								14-1/8		583
SET UPP7,6,2	L	B03D1		1-01 *			K2-3		1		N	12-1/8		584
SET UPP7,6,2	L	E07V2		1-02 *			K4-3			SOURCE				584
SET UPP7,6,2	L			1								12-1/8		584
SET UPP8,5	L	A03A1		1-01 *			K2-3		1		N	16-1/8		585
SET UPP8,5	L	E07D1		1-02 *			K4-3			SOURCE				585
SET UPP8,5	L			1								16-1/8		585
SLR ADRS	H	A07V2		1-01 *			K4-6		1		N	8-5/8		586
SLR ADRS	H	D08T2		1-02 *			KT-6		2	SOURCE	N	3-6/8		586
SLR ADRS	H	E04H2		1-03 *			K1-7			SOURCE				586
SLR ADRS	H			1								12-3/8		586
SM=0	L	C05A1		1-01 *			K3-35		2	SOURCE (K3-3)	N	3-5/8		587
SM=0	L	D06A1		1-02 *			K5-3		1		N	4-7/8		587
SM=0	L	E08K1		1-03 *			KT-9							587
SM=0	L			1								8-4/8		587
SM=1	L	B05V2		1-01 *			K3-3		1	SOURCE	N	3-7/8		588
SM=1	L	D06B1		1-02 *			K5-3							588
SM=1	L			1								3-7/8		588
SM=2	L	B05T2		1-01 *			K3-3		1	SOURCE	N	4-1/8		589
SM=2	L	D06C1		1-02 *			K5-3							589
SM=2	L			1								4-1/8		589
SM=3	L	B05S2		1-01 *			D3-3		1	SOURCE	N	4-5/8		590
SM=3	L	D06D1		1-02 *			K5-3							590
SM=3	L			1								4-5/8		590
SM=7	L	E05U2					K3-36			SOURCE (K3-3)			1-PIN RUN	591
SPS(02:00)=7	H	D06B2		1-01 *			K5-8		1		N	4-7/8		592
SPS(02:00)=7	H	E08V2		1-02 *			KT-2							592
SPS(02:00)=7	H			1								4-7/8		592

RUN NAME	A/P	PIN NAME	ORDER PIN	BAY = ORDER	Q	DRAW OPT	RV RG Y	X	Z	REMARKS	NC FLAG	LENGTH	EXCEPTIONS	RUN NUMBER
SPS0 (1)	H	B05P2		1-01 *			K3-9		1		N	5-7/8		593
SPS0 (1)	H	D03F1		1-02 *			K2-6		2	SOURCE	N	2-5/8		593
SPS0 (1)	H	D06U2		1-03 *			K5-2							593
SPS0 (1)	H			1								8-4/8		593
SPS1 (1)	H	B05F2	C06V2	1-01 *			K3-9		1		N	4-7/8		594
SPS1 (1)	H	C06V2		1-02 *			K5-2		2		N	3-1/8		594
SPS1 (1)	H	D03H1		1-03 *			K2-6			SOURCE				594
SPS1 (1)	H			1								8-0/8		594
SPS2 (1)	H	B05A1	C03M2	1-01 *			K3-9		2		N	4-7/8		595
SPS2 (1)	H	C03M2		1-02 *			K2-6		1	SOURCE	N	4-7/8		595
SPS2 (1)	H	D06N2		1-03 *			K5-2							595
SPS2 (1)	H			1								9-6/8		595
SR ADRS	H	A07R1		1-01 *			K4-6		1		N	8-7/8		596
SR ADRS	H	D08P2		1-02 *			KT-6		2	SOURCE	N	2-5/8		596
SR ADRS	H	D04S2		1-03 *			K1-7			SOURCE				596
SR ADRS	H			1								11-4/8		596
SR16	H	B04L1		1-01 *			K1-9		1	SOURCE	N	3-3/8		597
SR16	H	C08F2		1-02 *			KT-9							597
SR16	H			1								3-3/8		597
SR17	H	E04M1		1-01 *			K1-9		1	SOURCE	N	4		598
SR17	H	C08M1		1-02 *			KT-9							598
SR17	H			1								4-0/8		598
SRB4 (1)	H	C03E2		1-01 *			K2-4		1	SOURCE	N	9-5/8		599
SRB4 (1)	H	E04L2		1-02 *			K1-8							599
SRB4 (1)	H			1								9-5/8		599
SRD (1)	H	C03D2		1-01 *			K2-4		1	SOURCE	N	9-3/8		600
SRD (1)	H	E04L1		1-02 *			K1-8							600
SRD (1)	H			1								9-3/8		600
SRDM0 (1)	H	D01V2		1-01 *			KF-3		1		N	1-3/8		601
SRDM0 (1)	H	E02F1		1-02 *			KE-37			SOURCE (KF-7)				601
SRDM0 (1)	H			1								1-3/8		601
SRDM1 (1)	H	D01U2		1-01 *			KF-3		1		N	1-1/8		602
SRDM1 (1)	H	D02T2		1-02 *			KE-37			SOURCE (KE-7)				602
SRDM1 (1)	H			1								1-1/8		602
SRI (1)	H	C03B1		1-01 *			K2-4		1	SOURCE	N	9-3/8		603
SRI (1)	H	E04H1		1-02 *			K1-8							603
SRI (1)	H			1								9-3/8		603
SRS (1)	H	C03F1		1-01 *			K2-4		1	SOURCE	N	9-5/8		604
SRS (1)	H	E04K2		1-02 *			K1-8							604
SRS (1)	H			1								9-5/8		604
SSYN INHIBIT	L	D09V1		1-01 *			DD		1		N	1		605
SSYN INHIBIT	L	E09B1		1-02 *			DD			SOURCE				605
SSYN INHIBIT	L			1								1-0/8		605

KD11A.N WRAPD .V35(1Ø2)-1 Ø3-JUN-77 27-Oct-77 16:17 PAGE 52

RUN NAME	A/P	PIN NAME	ORDER PIN	BAY - ORDER	Q	DRAW	RV RG Y OPT	X	Z	REMARKS	NC FLAG	LENGTH	EXCEPTIONS	RUN NUMBER
STALL (Ø)	H	CØ6M1		1-Ø1 *			K5-4		2	SOURCE	N	1-3/8		6Ø6
STALL (Ø)	H	CØ7H2		1-Ø2 *			K4-4		1		N	3-3/8		6Ø6
STALL (Ø)	H	DØ8F1		1-Ø3 *			KT-3							6Ø6
STALL (Ø)	H			1								4-6/8		6Ø6
START SW (Ø)	H	AØ6R1		1-Ø1 *			K5-7		1	SOURCE	N	15-7/8		6Ø7
START SW (Ø)	H	FØ7U1		1-Ø2 *			K4-3							6Ø7
START SW (Ø)	H			1								15-7/8		6Ø7
SWITCH (1)	H	AØ6R2		1-Ø1 *			K5-6		1	SOURCE	N	13-3/8		6Ø8
SWITCH (1)	H	FØ5J2		1-Ø2 *			K3-2							6Ø8
SWITCH (1)	H			1								13-3/8		6Ø8
T14 (1)	H	DØ8A1					KT-2			SOURCE			1-PIN RUN	6Ø9
T15 (1)	H	DØ8F1					KT-2			SOURCE			1-PIN RUN	61Ø
TDATA (Ø)	H	DØ7N2					K4-6			SOURCE			1-PIN RUN	611
TRACE	L	BØ6M2		1-Ø1 *			K5-45		1		N	12-1/8		612
TRACE	L	FØ5S1		1-Ø2 *			K3-7			SOURCE				612
TRACE	L			1								12-1/8		612
TRAP	L	BØ6S1		1-Ø1 *			K5-5		1		N	7-3/8		613
TRAP	L	EØ5E1		1-Ø2 *			K3-6			SOURCE				613
TRAP	L			1								7-3/8		613
TRAP (1)	H	DØ6H1		1-Ø1 *			K5-4		1	SOURCE	N	7-5/8		614
TRAP (1)	H	FØ1D1		1-Ø2 *			KM-2							614
TRAP (1)	H			1								7-5/8		614
TRAPS DATA	L	BØ6N2		1-Ø1 *			K5-4		1		N	5-5/8		615
TRAPS DATA	L	DØ5H2		1-Ø2 *			K3-6			SOURCE				615
TRAPS DATA	L			1								5-5/8		615
TRUE BR	L	DØ5L1		1-Ø1 *			K3-5		1		N	1-2/8		616
TRUE BR	L	DØ6F1		1-Ø2 *			K5-3			SOURCE				616
TRUE BR	L			1								1-2/8		616
ISACK (Ø)	H	DØ7J1					K4-6			SOURCE			1-PIN RUN	617
UBFØ (1)	H	CØ3F2		1-Ø1 *			K2-5		2	SOURCE	N	2-2/8		618
UBFØ (1)	H	CØ6N1		1-Ø2 *			K5-34		1		N	6-5/8		618
UBFØ (1)	H	FØ5S1	BØ7L1	1-Ø3 *			K3-2		2		N	9-7/8		618
UBFØ (1)	H	BØ7L1		1-Ø4 *			K4-3							618
UBFØ (1)	H			1								18-6/8		618
UBF1 (1)	H	CØ3P1		1-Ø1 *			K2-5		2	SOURCE	N	2-3/8		619
UBF1 (1)	H	CØ6N2		1-Ø2 *			K5-34		1		N	6-5/8		619
UBF1 (1)	H	EØ5P1		1-Ø3 *			K3-2							619
UBF1 (1)	H			1								9-Ø/8		619
UBF2 (1)	H	CØ3R1		1-Ø1 *			K2-5		2	SOURCE	N	2-1/8		62Ø
UBF2 (1)	H	CØ6P2		1-Ø2 *			K5-34		1		N	6-1/8		62Ø
UBF2 (1)	H	FØ5N1		1-Ø3 *			K3-2							62Ø
UBF2 (1)	H			1								8-2/8		62Ø

KD11A.N WRAPD .V35(1Ø2)-1 Ø3-JUN-77 27-Oct-77 16:17 PAGE 53

RUN NAME	A/P	PIN NAME	ORDER PIN	BAY - ORDER	Q	DRAW	RV RG Y OPT	X	Z	REMARKS	NC FLAG	LENGTH	EXCEPTIONS	RUN NUMBER
UBF3 (1)	H	EØ6P2		1-Ø1 *			K5/3		2		N	4-7/8		621
UBF3 (1)	H	CØ3S1		1-Ø2 *			K2-5		1	SOURCE	N	8-5/8		621
UBF3 (1)	H	FØ5F2		1-Ø3 *			K3-2							621
UBF3 (1)	H			1								13-4/8		621
UBF4 (1)	H	BØ6P2		1-Ø1 *			K5-3		2		N	2-6/8		622
UBF4 (1)	H	CØ3H2		1-Ø2 *			K2-5		1	SOURCE	N	4-1/8		622
UBF4 (1)	H	DØ5K1		1-Ø3 *			K3-2							622
UBF4 (1)	H			1								6-7/8		622
UNFL	H	AØ1L2		1-Ø1 *			KF-4		1	SOURCE	N	3-7/8		623
UNFL	H	BØ2M2	EØ1F2	1-Ø2 *			KE-4		2		N	7-7/8		623
UNFL	H	EØ1F2		1-Ø3 *			KM-2							623
UNFL	H			1								11-6/8		623
UPP MATCH	H	CØ4L2		1-Ø1 *			K1-9		1	SOURCE	N	9-5/8		624
UPP MATCH	H	FØ7K2		1-Ø2 *			K4-2							624
UPP MATCH	H			1								9-5/8		624
V DATA	L	BØ5H1		1-Ø1 *			K3-9		1	SOURCE	N	1Ø-1/8		625
V DATA	L	EØ6U2		1-Ø2 *			K5-2							625
V DATA	L			1								1Ø-1/8		625
WAIT	L	BØ5E1		1-Ø1 *			K3-6		1	SOURCE	N	1-7/8		626
WAIT	L	BØ6P1		1-Ø2 *			K5-4							626
WAIT	L			1								1-7/8		626
WAIT (Ø)	H	CØ6P1		1-Ø1 *			K5-4		1	SOURCE	N	5-3/8		627
WAIT (Ø)	H	EØ5J1		1-Ø2 *			K3-7							627
WAIT (Ø)	H			1								5-3/8		627
WR F(Ø7:ØØ)	L	EØ7F2		1-Ø1 *			K4-2		1	SOURCE	N	6-3/8		628
WR F(Ø7:ØØ)	L	FØ4V1		1-Ø2 *			K1-8							628
WR F(Ø7:ØØ)	L			1								6-3/8		628
WR F(15:Ø8)	L	EØ4A1		1-Ø1 *			K1-8		1		N	1Ø-7/8		629
WR F(15:Ø8)	L	EØ7K2		1-Ø2 *			K4-2			SOURCE				629
WR F(15:Ø8)	L			1								1Ø-7/8		629
WRH (1)	H	DØ3J2		1-Ø1 *			K2-7		1	SOURCE	N	3-7/8		63Ø
WRH (1)	H	EØ7H2		1-Ø2 *			K4-2							63Ø
WRH (1)	H			1								3-7/8		63Ø
WRL (1)	H	DØ3H2		1-Ø1 *			K2-7		1	SOURCE	N	3-4/8		631
WRL (1)	H	EØ7E2		1-Ø2 *			K4-2							631
WRL (1)	H			1								3-4/8		631
ZB (1)	H	AØ1F1		1-Ø1 *			KF-4		1	SOURCE	N	1-3/8		632
ZB (1)	H	AØ2M1		1-Ø2 *			KE-4							632
ZB (1)	H			1								1-3/8		632
ZB+FPS(Z)	H	AØ1J1		1-Ø1 *			KF-4		1		N	3-7/8		633
ZB+FPS(Z)	H	BØ2K2		1-Ø2 *			KE-4			SOURCE				633
ZB+FPS(Z)	H			1								3-7/8		633

This drawing and specifications, herein, are the property of Digital Equipment Corporation and shall not be reproduced or copied or used in whole or in part as the basis for the manufacture or sale of items without written permission.

AUTOMATIC WIRE TESTER (AWT) REVISION STATUS

DRAWING NUMBER	INIT REL H	J	K	L	M	N	P
K-WL-KD11-A-WL	H	J	J	K	L	M	N
D-AD-7010230-0-0		*	*	A	B	B	C
C-CS-5410904-0-1	B	B	C	C	C	C	C

REVISIONS

REV.	CHANGE NO.	CHK
J	KD11A-00011	—
	ORIGINATED	
K	5410904-1	—
L	KD11A-00012	
M	KD11A-00013	KP
N	KD11A-00014	K.T.
P	KD11A-00015	B.C.

DRN. E. Kenwood	DATE 8-29-74	TITLE	
CHK'D. L. Gilbert	DATE 8-29-74	KD11-A	
ENG.	DATE 9-5-74	AWT REVISION STATUS	
PROJ. ENG.	DATE 9-5-74		
PROD.	DATE 9-5-74		
FIRST USED ON KD11-A		SIZE A, CODE WT, NUMBER 7010230-0	REV. P
SCALE —		DIST.	
SHEET 1 OF 1			

digital EQUIPMENT CORPORATION MAYNARD, MASSACHUSETTS

SIZE A CODE WT NUMBER 7010230-0 REV P

DRA 123

DEC 16-(325)-1097-N174

DIGITAL EQUIPMENT CORPORATION
MAYNARD, MASSACHUSETTS

PARTS LIST

MADE BY J70 Loughlin	CHECKED J70 Loughlin	SECTION
DATE 9/26/72	DATE 9/27/72	
ENG J70 Loughlin	PROD [illegible]	ISSUED SECT.
DATE 9/27/72	DATE [illegible]	

ITEM NO.	DWG NO. / PART NO.	DESCRIPTION	QUANTITY / VARIATION KJ11-A
1	D-CS-M7237-Ø-1	STACK LIMIT REGISTER	1
2	D-MU-KD11-A-MU	MODULE UTILIZATION	REF

TITLE	ASSY NO.	SIZE	CODE	NUMBER	REV.	ECO NO.
STACK LIMIT REGISTER (PL)		A	PL	KJ11-A-Ø		
	SHEET 1 OF 1	DIST.				

DEC FORM DEC 16 (325) 1031 N870
DRA 110

This drawing and specifications, herein, are the property of Digital Equipment Corporation and shall not be reproduced or copied or used in whole or in part as the basis for the manufacture or sale of items without written permission.

PARTS REFERENCE

ITEM NO	DRAWING REFERENCE	DESCRIPTION		PART NUMBER	QUANTITY
1	E1, E6	DEC 5384	IC	1910394	2
2	E2, E7	DEC 74175	IC	1910651	2
3	E3, E8	DEC 8881	IC	1909705	2
4	E4, E9	DEC 7485	IC	1910224	2
5	E5	DEC 74H00	IC	1909056	1
6	E10	DEC 74H20	IC	1905635	1
7	E11	DEC 7408	IC	1910155	1
8	C1 THRU C11	.01 MFD 100V 20%	CAP	1001610	11
9	C12	6.8 MFD 35V 20%	CAP	1000067	1
10	R1, R2	1K 1/4W 5%	RES	1300365	2
REF		STACK LIMIT REGISTER		A-PL-M7237-0-0	

NOTES:

1. PIN NOTATION THROUGHOUT IS ORDERED UPON MODULE PLACEMENT IN THE PROCESSOR. MODULE REFERENCE ALONE IS OBTAINED BY DELETING THE NUMBER (SLOT LOCATION) AFTER THE FIRST LETTER, AND CONVERTING THE FIRST LETTER ACCORDING TO THE PIN NOMENCLATURE CHART AT RIGHT.

2. ALL SIGNALS THAT HAVE MODULE PINS ARE SO NOTED; MULTIPLE NOTATIONS OF THE SAME SIGNALS WITHIN A MODULE HAVE THE PIN NOTED ON EACH. AN INPUT SIGNAL IS NOTED ONLY ONCE PER SHEET UNLESS SEPERATE PINS ARE USED; MULTIPLE INPUTS ARE CONNECTED. MODULE OUTPUT SIGNALS ARE BROUGHT TO THE EXTREME RIGHT OF EACH SHEET

3. KJ11 SIGNAL SOURCE NOTATION (K1-2, FOR EXAMPLE) IDENTIFIES THE SIGNAL SOURCE FROM THE PROCESSOR. FIRST NUMBER AFTER THE K INDICATES THE MODULE PRINT SET, WHILE THE SECOND INDICATES THE SHEET WITHIN THE SET. SIGNALS WITH A "BUS" PREFIX REPRESENT A "WIRED OR" SITUATION, AND MULTIPLE SOURCES FOR THESE SIGNALS CAN EXIST.

4. UNLESS OTHERWISE SPECIFIED: RESISTANCE IS IN OHMS

5. DETAILS ON COMPONENTS ARE NOTED IN THE PARTS REFERENCE, PLACEMENT IS NOTED IN THE COMPONENT PLACEMENT DIAGRAM. CAPACITORS WITHOUT NOTED VALUES ARE .01 MFD.

6. GND AND +5V ARE USUALLY PIN 7 AND PIN 14, RESPECTIVELY. EXCEPTIONS ARE:

IC TYPE	GND	+5V
DEC 5384	PIN 1	PIN 8
DEC 74175	PIN 8	PIN 16

COMPONENT PLACEMENT

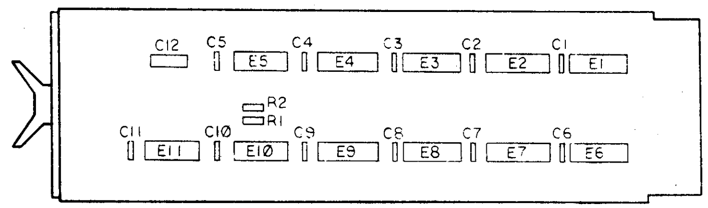

PIN NOMENCLATURE

MODULE	PROCESSOR
A	EØ3

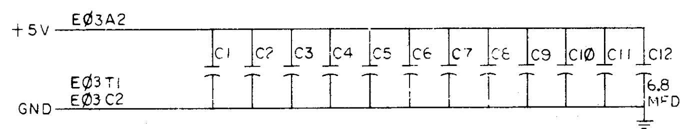

REVISIONS			
REV	CHANGE NO.		CHK.
B	M7237-00001	9-25-74 J.ROGERS 10-2-74	

FIRST USED ON OPTION / MODEL	PDP 11/35
UNLESS OTHERWISE SPECIFIED	DIMENSION IN INCHES. TOLERANCES: DECIMALS ± .005, FRACTIONS ± 1/64, ANGLES ± 0°30'. FINAL SURFACE QUALITY. REMOVE BURRS AND BREAK SHARP CORNERS
MATERIAL	—
FINISH	—
DRN	W. MAJOR, DATE 9/22/71
CHKD	DATE 3/7/72
ENG	P.E. Janson, DATE 5-23-72
PROD	DATE 5/25/72
NEXT HIGHER ASSY	A-ML-KJ11-A
SCALE	—
SHEET	1 OF 2
PARTS LIST	QTY. / DESCRIPTION / PART NO. / ITEM NO.

digital EQUIPMENT CORPORATION MAYNARD MASSACHUSETTS

TITLE: STACK LIMIT REGISTER

M7237 KJ-11

SIZE D, CODE CS, NUMBER M7237-Ø-1, REV. B

This drawing and specifications, herein, are the property of Digital Equipment Corporation and shall not be reproduced or copied or used in whole or in part as the basis for the manufacture or sale of items without written permission.

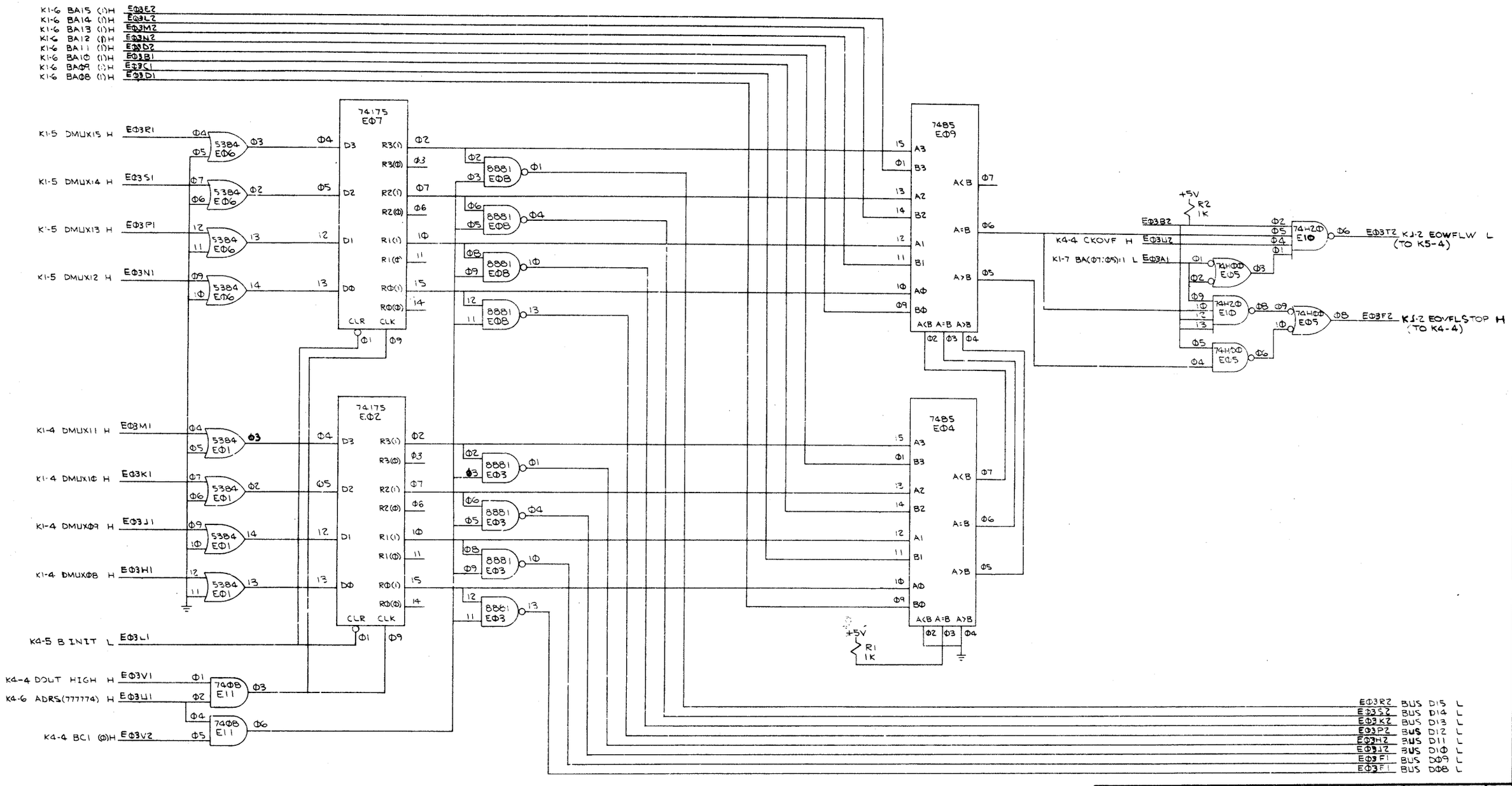

FIRST USED ON OPTION/MODEL	QTY.	DESCRIPTION	PART NO.	ITEM NO.
PDP 11/35		PARTS LIST		

UNLESS OTHERWISE SPECIFIED DIMENSION IN INCHES TOLERANCES

DECIMALS	ANGLES
XXX = .005	±0° 30'
.XX = .02	
.X = .1	

REMOVE BURRS AND BREAK SHARP CORNERS SURFACE QUALITY ✓

MATERIAL —/—/—

FINISH —/—/—

		DATE
DRN.	W. MAJOR	7/22/71
CHK'D		2-7-72
ENG		5-25-72
PROJ ENG		5-25-72
PRODN		5/29/72

digital EQUIPMENT CORPORATION MAYNARD MASSACHUSETTS

TITLE STACK LIMIT REGISTER

M7237 KJ-2

NEXT HIGHER ASSY. A-ML-KJ11-A

SCALE —/—

SHEET 2 OF 2

SIZE	CODE	NUMBER	REV.
D	CS	M7237-Ø-1	B

DIST.

REVISIONS

CHK	CHANGE NO.	REV

DEC FORM NO DRD 102-B

DIGITAL EQUIPMENT CORPORATION
MAYNARD, MASSACHUSETTS

SOFTWARE LIST

MADE BY J.T. Loughlin	CHECKED J.T. Loughlin	SECTION
DATE 9/26/72	DATE 9/27/72	
ENG J.T. Loughlin	PROD G.L. Ringer	ISSUED SECT.
DATE 9/27/72	DATE 7-28-72	

LEGEND

- D DOCUMENT
- DN DOCUMENT CHANGE NOTICE
- PA PAPER TAPE ASCII
- PB PAPER TAPE BINARY
- PM PAPER TAPE READ-IN-MODE

ITEM NO.	DWG NO./PART NO.	DESCRIPTION	QUANTITY/VARIATION KJ11-A							KIT CHECK BY ____ DATE ____	INSTALLATION CHECK BY ____ DATE ____
1	MAINDEC-11-DCKBF-A-D	STACK LIMIT TEST	1								
2	MAINDEC-11-DCKBF-A-PB	STACK LIMIT TEST	1								

TITLE	ASSY. NO.	SIZE	CODE	NUMBER	REV.	ECO NO
STACK LIMIT REGISTER	~~~	A	SL	KJ11-A-SL		
	SHEET 1 OF 1	DIST.				

DEC FORM NO.
DRA 120

digital EQUIPMENT CORPORATION MAYNARD MASSACHUSETTS

DRAWING DIRECTORY

CUSTOMER PRINT SET INDEX

THIS IS PRINT SET

	SEQUENCE
TIMING DIAGRAM	D-TD-KW11-L-Ø2
LINE FREQUENCY CLOCK	D-BS-KW11-L-01
LINE CLOCK	D-CS-M787-Ø-1
LINE FREQUENCY CLOCK	A-PI-KW11-L-Ø
SOFTWARE LIST	A-SL-KW11-L-28

MFG PRINTS

TEST PROCEDURE	A-SP-KW11-L-Ø3

UNIT VARIATIONS

VARIATION	TITLE	PRINT SET TYPE: KW11-L
KW11-L	LINE FREQUENCY CLOCK	X

REVISIONS: REV / CHG. NO. / DATE

USED ON OPTION/MODEL

DRN.	DATE	TITLE
S [illegible]	2-14-72	LINE FREQUENCY CLOCK (KW11-L)
CHK'D. [illegible]	6-13-72	
PROJ. ENG. [illegible]	6-14-72	
PROD. [illegible]	6-14-72	
FIELD SERV. [illegible]	6-14-72	

SIZE	CODE	NUMBER	REV
B	DD	KW11-L-Ø	*

SHEET 1 OF 2

DIST

DRB 106

DEC 16-(325)-1062-1-N871

CUSTOMER PRINT SET KW11-L	DEPOT SET	FIND NO.	DRAWING NO.	REV	NO OF SHT	DESCRIPTION	OPTION NO.
X	X		D-TD-KW11-L-02	*	1	TIMING DIAGRAM, KW11-L	
X	X		D-BS-KW11-L-01	A	2	LINE FREQUENCY INTERNAL CLOCK	
	X		A-SP-KW11-L-03	*	3	TEST PROCEDURE	
X	X		D-CS-M787-0-1	#	2	LINE CLOCK	
X	X		A-PL-KW11-L-0	*	1	LINE FREQUENCY CLOCK	
X	X		A SL KW11 L 28	*	1	SOFTWARE LIST	

CUSTOMER PRINT SET	DEPOT SET	FIND NO.	DRAWING NO.	REV	NO OF SHT	DESCRIPTION	OPTION NO.

TITLE		SIZE	CODE	NUMBER	REV
LINE FREQUENCY CLOCK (KW11-L)	SHEET 2 OF 2	B	DD	KW11-L-0	*

DRB 108

DEC 16—(325)—1062—2—N871

This drawing and specifications, herein, are the property of Digital Equipment Corporation and shall not be reproduced or copied or used in whole or in part as the basis for the manufacture or sale of items without written permission.

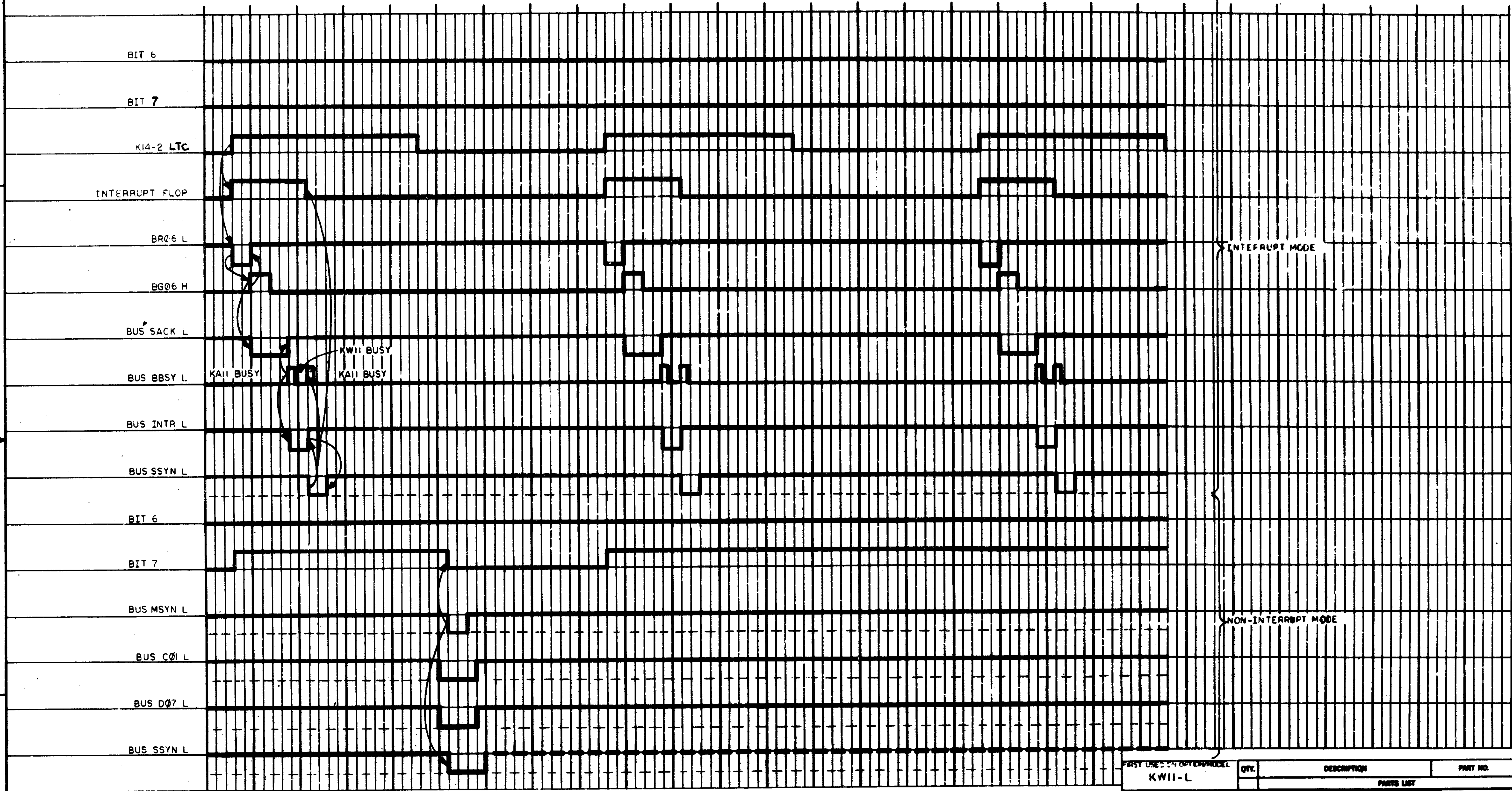

FIRST USED ON OPTION/MODEL: KW11-L

NEXT HIGHER ASSY: A-ML-KW11-L

EQUIPMENT CORPORATION

TITLE: TIMING DIAGRAM (KW11-L)

SIZE: D | CODE: TD | NUMBER: KW11-L-Ø2

SHEET 1 OF 1

This drawing and specifications, herein are the property of Digital Equipment Corporation and shall not be reproduced or copied or used in whole or in part as the basis for the manufacture or sale of items without written permission.

PARTS REFERENCE

ITEM NO.	DRAWING REFERENCE	DESCRIPTION	PART NUMBER	QUANTITY
1	R1 R3	390Ω 1/4 W 5% CC	1300309	2
2	R2, R6 – R11	1K 1/4 W 5% CC	1300385	7
3	R4, R5	180Ω 1/4W 5% CC	1301322	2
4	R12	2.4K 1/4W 5% CC	1303177	1
5	C1 – C15 C18, C19	.01 MFD 100V 20% DISC	1001610	17
6	C16, C17	560 MMF 100V 5% D.M.	1000025	2
7	Q1, Q2	TRANSISTOR DEC 3009 B.S.	1503100	2
8.	E1, E5, E8, E9, E10	I.C. DEC 380	1909485	5
9.	E2	I.C. DEC 7430	1905578	1
10	E3	I.C. DEC 8815	1909713	1
11	E4	I.C. DEC 7400	1905575	1
12	E6, E7, E13	I.C. DEC 7474	1905547	3
13	E11	I.C. DEC 7404	1909888	1
14	E12, E14, E15	I.C. DEC 8881	1909705	3

NOTES

1 PIN NOTATION THROUGHOUT IS ORDERED UPON MODULE PLACEMENT IN THE KA11 PROCESSOR. MODULE REFERENCE ALONE IS OBTAINED BY DELETING THE NUMBER (SLOT LOCATION) AFTER THE FIRST LETTER, AND CONVERTING THE FIRST LETTER ACCORDING TO THE PIN NOMENCLATURE CHART AT RIGHT.

2. ALL SIGNALS THAT HAVE MODULE PINS ARE SO NOTED; MULTIPLE NOTATIONS OF THE SAME SIGNALS WITHIN A MODULE HAVE THE PIN NOTED ON EACH. AN INPUT SIGNAL IS NOTED ONLY ONCE PER SHEET UNLESS SEPERATE PINS ARE USED; MULTIPLE INPUTS ARE CONNECTED. MODULE OUTPUT SIGNALS ARE BROUGHT TO THE EXTREME RIGHT OF EACH SHEET.

3 PROCESSOR SIGNAL SOURCE NOTATION (K10-2, FOR EXAMPLE) IDENTIFIES THE SIGNAL SOURCE (PRINT AND MODULE). THE FIRST NUMBER AFTER THE K INDICATES THE MODULE PRINT SET WHILE THE SECOND INDICATES THE SHEET WITHIN THE SET. IF ON A PRINT, THE FIRST NUMBER OF THE K PREFIXES COINCIDE FOR A SIGNAL NAME AND THE PRINT (SEE TITLE BLOCK), THE SIGNAL IS GENERATED ON THE MODULE. A DIFFERENCE IN THE FIRST NUMBER OF THE K PREFIXES INDICATES A SIGNAL GENERATED OFF THE MODULE. SIGNALS WITH A "BUS" PREFIX REPRESENT A "WIRED OR" SITUATIONS AND MULTIPLE SOURCES FOR THE SIGNAL CAN EXIST.

4. DETAILS ON COMPONENTS ARE NOTED IN THE PARTS REFERENCE, PLACEMENT IS NOTED IN THE COMPONENT PLACEMENT DIAGRAM.

5. GND AND +5V ARE USUALLY PIN 7 AND PIN 14, RESPECTIVELY EXCEPTIONS ARE:

IC TYPE	GND	+5V
DEC 7481	PIN 10	PIN 4
DEC 7482	PIN 11	PIN 4
DEC 8251	PIN 8	PIN 16
DEC 8271	PIN 8	PIN 16
DEC 380	PIN 1	PIN 8
DEC 384	PIN 1	PIN 8

6. UNLESS OTHERWISE NOTED–RESISTANCE IS IN OHMS; CAPACITANCE IS IN MICRO MICRO FARADS, CAPACITORS WITHOUT ANY NOTED VALUES ARE .01 MFD.

INSTALLATION PROCEDURE

1. REMOVE JUMPER FROM B12V2 TO B12R2
2. INSTALL M787 LINE FREQUENCY CLOCK MODULE IN KA11 SLOT B12
3. RUN MAINDEC DEC-11-D2DA LINE FREQUENCY CLOCK TEST

COMPONENT PLACEMENT

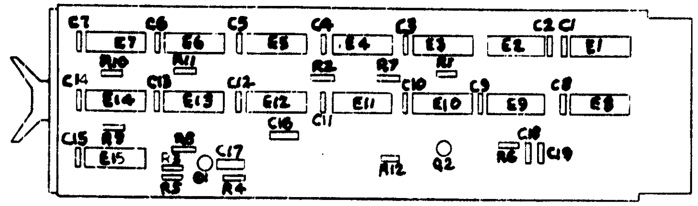

PIN NOMENCLATURE

MODULE	PROCESSOR
A	B

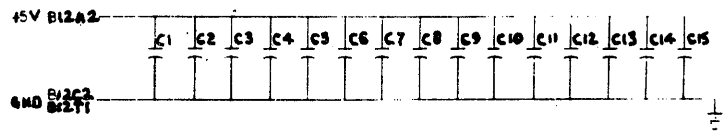

REVISIONS			
CHK	CHANGE NO.		REV.
	KWIIL-00001	M. FRIT	A

FIRST USED ON OPTION/MODEL: KW11-L

DO NOT SCALE DRAWING
UNLESS OTHERWISE SPECIFIED
DIMENSION IN INCHES
TOLERANCES
DECIMALS ±.005 FRACTIONS ± 1/64 ANGLES ± 0°30'
FINAL SURFACE QUALITY ✓
REMOVE BURRS AND BREAK SHARP CORNERS

MATERIAL —/—
FINISH —/—

QTY.	DESCRIPTION	PART NO.	ITEM NO.
	PARTS LIST		

DRN. [signature] DATE
CHK'D. [signature] DATE 7/7/70
ENG. [signature] DATE
PROJ. ENG. [signature] DATE
PROD. [signature] DATE 7/8/70
NEXT HIGHER ASSY A-ML-KW11-L
SCALE —/—
SHEET 1 OF 2

digital EQUIPMENT CORPORATION MAYNARD, MASSACHUSETTS

TITLE: LINE FREQUENCY INTERVAL CLOCK

SIZE	CODE	NUMBER	REV.
D	BS	KW11-L-Ø1	A

DIST.

DEC FORM NO DRD 100

D BS KW11-L-Ø1 A

This drawing and specifications, herein, are the property of Digital Equipment Corporation and shall not be reproduced or copied or used in whole or in part as the basis for the manufacture or sale of items without written permission.

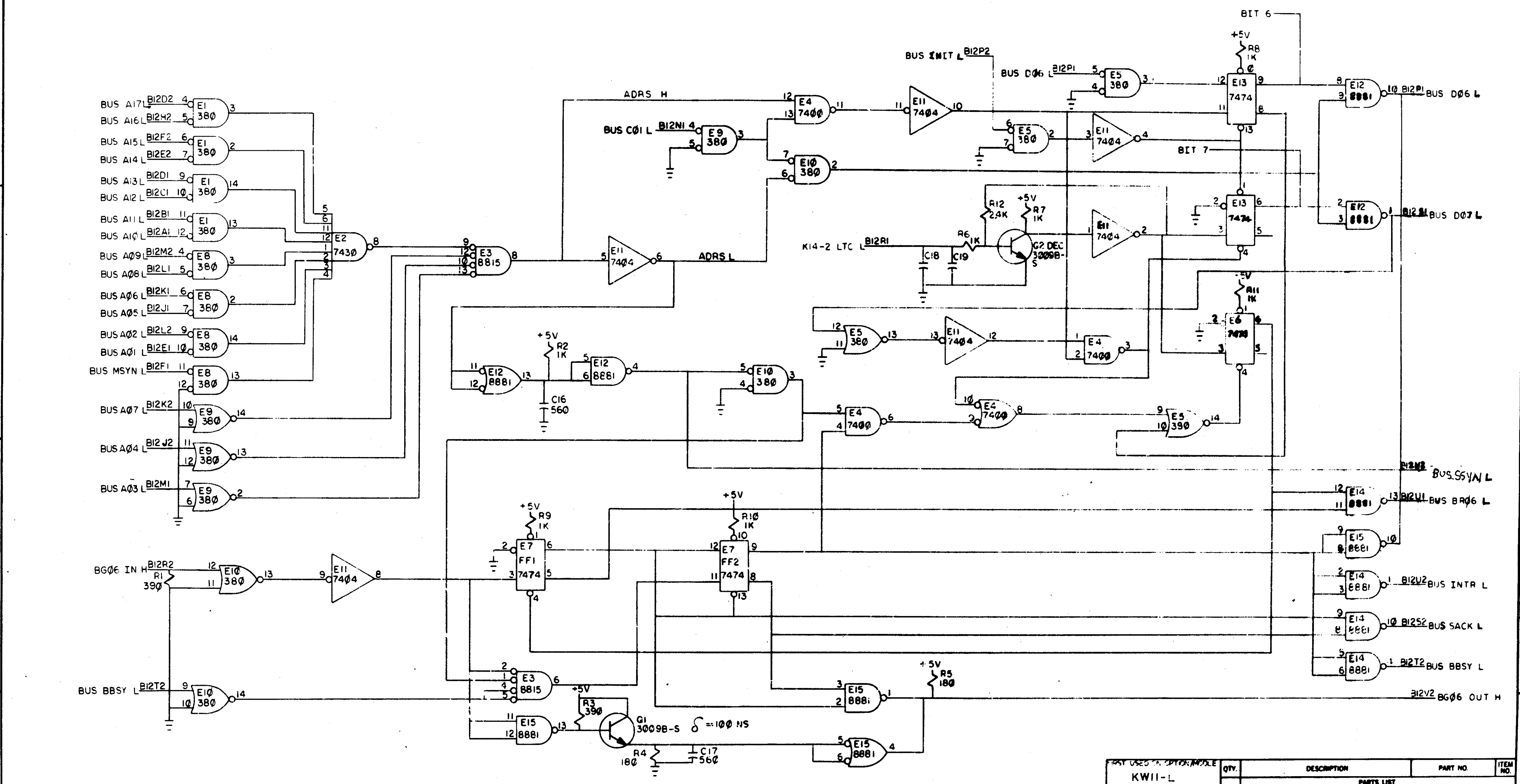

FIRST USED IN OPTION/MODULE	KW11-L	
UNLESS OTHERWISE SPECIFIED DIMENSIONS IN INCHES TOLERANCES		
DRN		DATE 6/2/70
CHKD		DATE 7/2/70
ENG		DATE 7/8/70
PROJ. ENG		DATE 7/3/70
		7/9/70
NEXT HIGHER ASSY	A-ML-KW11-L	
SHEET	2 OF 2	

QTY.	DESCRIPTION	PART NO.	ITEM NO.

PARTS LIST

DIGITAL EQUIPMENT CORPORATION MAYNARD MASSACHUSETTS

LINE FREQUENCY INTERVAL CLOCK

SIZE D CODE BS NUMBER KW11-L-Ø1 REV. A

DEC FORM NO DRD 102A

THIS SCHEMATIC IS FURNISHED ONLY FOR TEST AND MAINTENANCE PURPOSES. THE CIRCUITS ARE PROPRIETARY IN NATURE AND SHOULD BE TREATED ACCORDINGLY
COPYRIGHT 1970 BY DIGITAL EQUIPMENT CORPORATION

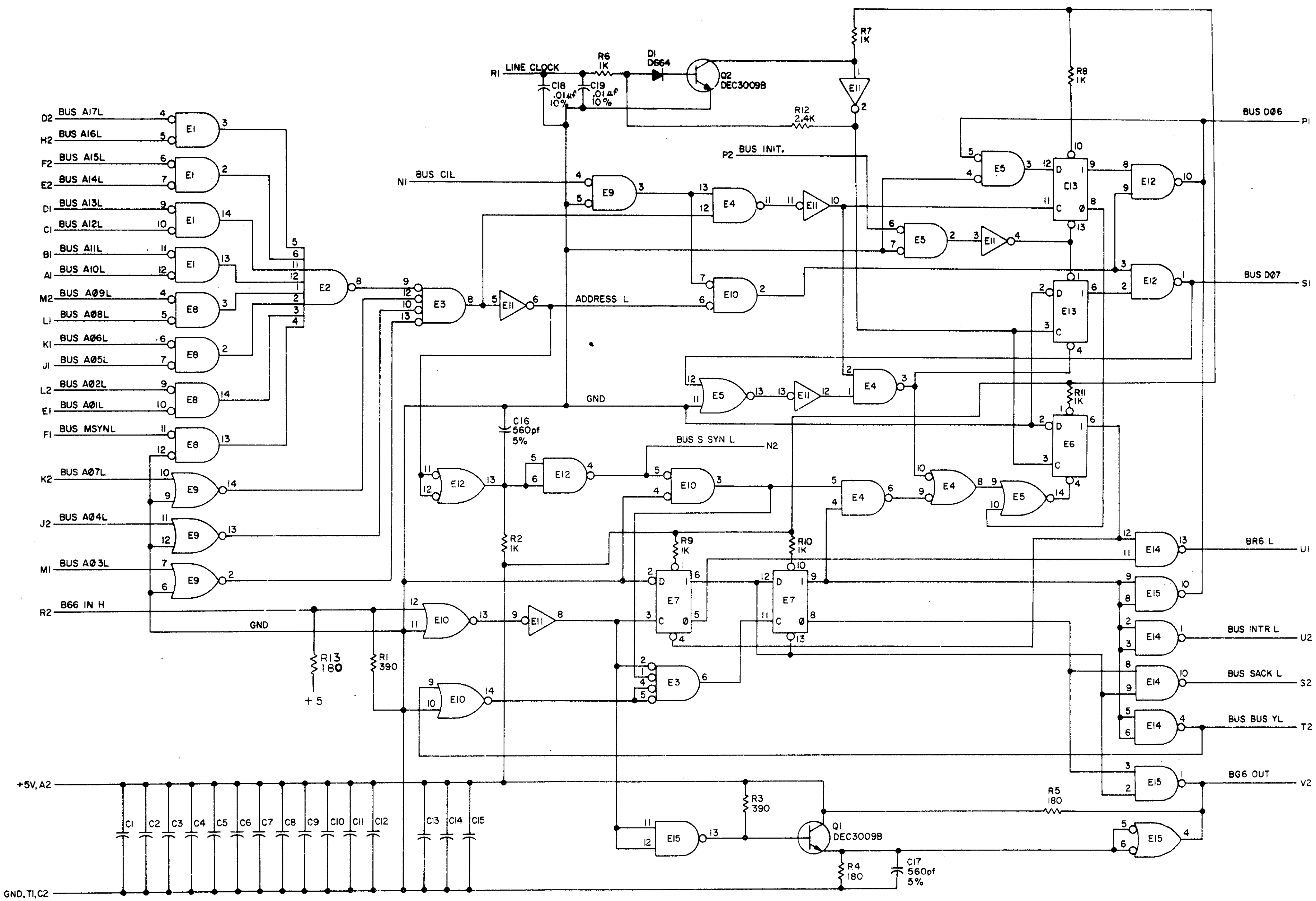

UNLESS OTHERWISE INDICATED:
RESISTORS ARE 1/4W, 5%
CAPACITORS ARE .01uf, 100V, 20%
DEC8640: E1, E5, E8, E10, E9
DEC7430 = E2
DEC8815 = E3
DEC7400 = E4
DEC7404 = E11
DEC8881 = E15, E12, E14
DEC7474 = E6, E7, E13

PIN 1 = GND
PIN 8 = +5V ON E1, E8, E9, E10, E5

PIN 7 = GND
PIN 14 = +5V ON E2, E3, E4, E11, E12, E14, E13, E7, E15, E6

NOTES

1 DEC 8640 REPLACES THE OBSOLETE DEC 380

REVISIONS		
CHG	CHG NO.	REV
	00001	A
	00002	B
	00003	C
	00004	D
	00005	E

R. CARLSON
K. POON

DRN BUTLER	DATE 4-2-70
CHKD	DATE 4-23-70
ENG.	DATE 7/4/70
PROD	DATE

TRANSISTOR & DIODE CONVERSION CHART

DEC	EIA	DEC	EIA
DEC3009B	2N3009	D664	1N3606

EQUIPMENT CORPORATION
MAYNARD, MASSACHUSETTS

TITLE LINE TIME CLOCK INTERRUPT M787

SIZE	CODE	NUMBER	REV
D	CS	M787-0-1	E

PRINTED CIRCUIT REV. C D E

M0745 12

DIGITAL EQUIPMENT CORPORATION
MAYNARD, MASSACHUSETTS

PARTS LIST

MADE BY	M.Buczynski	CHECKED	SECTION
DATE	6-15-72	DATE 7/28/72	
ENG	M. Buczynski	PROD	ISSUED SECT.
DATE	6-15-72	DATE 6/15/72	

ITEM NO.	DWG NO./PART NO.	DESCRIPTION	QUANTITY/VARIATION KW11-L
1	M787	LINE TIME CLOCK INTERRUPT	X

TITLE	ASSY NO.	SIZE	CODE	NUMBER	REV.	ECO NO.
LINE FREQUENCY CLOCK (KW11-L)	SHEET 1 OF 1	A	PL	KW11-L-Ø	*	
		DIST.				

DEC FORM NO.16-1031
DRA 110

DIGITAL EQUIPMENT CORPORATION
MAYNARD, MASSACHUSETTS

SOFTWARE LIST

MADE BY	M. Buczynski	CHECKED	SECTION
DATE	6-15-72	DATE 7/28/72	
ENG	M. Buczynski	PROD	ISSUED SECT.
DATE	6-15-72	DATE 6/15/72	

LEGEND

- D DOCUMENT
- DN DOCUMENT CHANGE NOTICE
- PA PAPER TAPE ASCII
- PB PAPER TAPE BINARY
- PM PAPER TAPE READ-IN-MODE

ITEM NO.	DWG NO./PART NO.	DESCRIPTION	QUANTITY/VARIATION							KIT CHECK BY ____ DATE ____	INSTALLATION CHECK BY ____ DATE ____
1	MAINDEC 11-DZDA-PB	LINE FREQUENCY CLOCK TEST	1								
2	MAINDEC 11-D2DA-D	LINE FREQUENCY CLOCK TEST	1								

TITLE	ASSY. NO.	SIZE	CODE	NUMBER	REV.	ECO NO
LINE FREQUENCY CLOCK (KW11-L)	SHEET 1 OF 1	A	SL	KW11-L-28	*	
		DIST.				

DEC FORM NO. DEC 16 (327) 1049 N471
DRA 120

This drawing and specifications, herein, are the property of Digital Equipment Corporation and shall not be reproduced or copied or used in whole or in part as the basis for the manufacture or sale of items without written permission.

W130 PARTS REFERENCE

ITEM NO	DRAWING REFERENCE	DESCRIPTION	PART NUMBER	QUANTITY
1	R1,R3,R5,R7,R9,R11,R13,R15,R17,R19,R21,R23,	15K, 1/4W, 5% RES.	13ØØ496	28
	R25,R27,R29,R31,R33,R35,R37,R39,R41,R43,			
	R45,R47,R49,R51,R53,R55			
2	R2,R4,R6,R8,R1Ø,R12,R14,R16,R18,R2Ø,R22,	47Ø, 1/4W, 5% RES.	13ØØ316	28
	R24,R26,R28,R30,R32,R34,R36,R38,R40,			
	R42,R44,R46,R48,R5Ø,R52,R54,R56			
3	Q1-Q56	DEC 3ØØ9B TRANSISTOR	15Ø31ØØ	56
4	P1	H8Ø7 BLOCK, CONNECTOR	12Ø9123	1

W131 PARTS REFERENCE

ITEM NO	DRAWING REFERENCE	DESCRIPTION	PART NUMBER	QUANTITY
1	E1	DEC 74ØØN I.C.	19Ø5575	1
2	C1	.01 MFD, 100V, 20% DC CAP.	1ØØ161Ø	1
3	C2	6.8 MFD, 35V, 20% ST CAP.	1ØØØØ67	1
4	R1,R2,R3,R4,R5	3K, 1/4W, 5% RES.	13ØØ432	5
5	R6	330, 1/4W, 5% RES.	13ØØ295	1
6	Q1	DEC 3ØØ9B TRANSISTOR	15Ø31ØØ	1
7	I1-I28	LAMP, HUDSON, BLUE *2309G	12Ø9219	28
8	S1-S4	SWITCH, TOGGLE, SPST, 6AT1-T2	12Ø1168	4

NOTES:

1. THE KM11 IS A TWO MODULE (W13Ø, W131) OPTION TO THE KA11 TO AID MAINTENANCE. THIS PREWIRED OPTION IS INSTALLED BY INSERTING THE W13Ø MODULE INTO LOCATION BØ2 AND INSERTING THE W131 MODULE INTO THE W13Ø. NOTE THAT THE SWITCHES AND LIGHTS FACE TOWARD AND EXTEND BELOW THE CONSOLE. THE BOTTON COVER MUST BE REMOVED WITH THE CHASSIS EXTERNAL TO THE CABINET.

2. LABELS FOR THE INTERNAL MACHINE STATES LAMPS ARE NOTED ON THE W131 ETCH BOARD. SWITCHES PROVIDE A MANUAL CLOCK AND BUS RESPONSE AND ARE ACTIVE WHEN THE TOGGLE IS TOWARD THE NAME. NORMAL MACHINE OPERATION REQUIRES THAT ALL SWITCHES BE IN THE OFF POSITION.

3. "M CLK ENABLE" AND "M CLK" PROVIDE A MANUAL CLOCK FOR THE KA11. "M CLK ENABLE" IS ACTIVATED WHILE THE PROCESSOR IS HALTED. EACH TOGGLE OF "M CLK" THEN STEPS THE PROCESSOR THROUGH THE SMALLEST PROCESSOR CLOCK INTERVALS, THE R/W STATES. THE NEXT HIGHEST CLOCK INTERVAL (S CLK) IS PROVIDED BY FOUR TOGGLES (2 COMPLETE SWITCH CYCLES) AND INDICATED BY THE R/W2 LAMP. R/W2 IS THE LAST (OR REST) R/W STATE IN A "S CLK" INTERVAL. NORMAL OPERATION IS RESUMED WHEN "M CLK" AND THEN "M CLK ENABLE" ARE RETURNED TO OFF.

4. "NO TIME OUT" AND "SSYN" PROVIDE A MANUAL BUS RESPONSE TO THE PROCESSOR. IT IS USED WHEN OTHER DEVICES ARE NOT AVAILABLE. "NO TIME OUT" IS ACTIVATED, WHILE THE PROCESSOR IS HALTED, TO ELIMINATE AN ERROR TRAP ON MANUAL "SSYN". AT THE APPROPRIATE TIMES IN A BUS TRANSFER "SSYN" IS ACTIVATED AND DEACTIVATED.

COMPONENT PLACEMENT

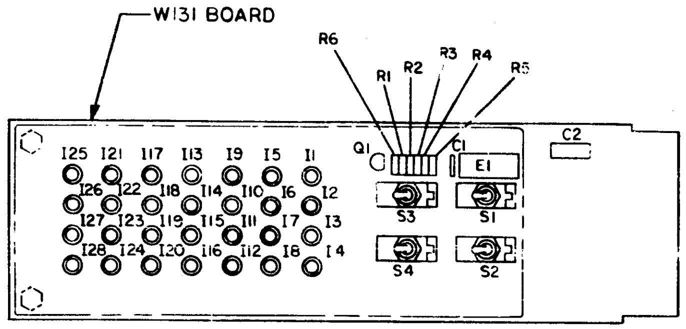

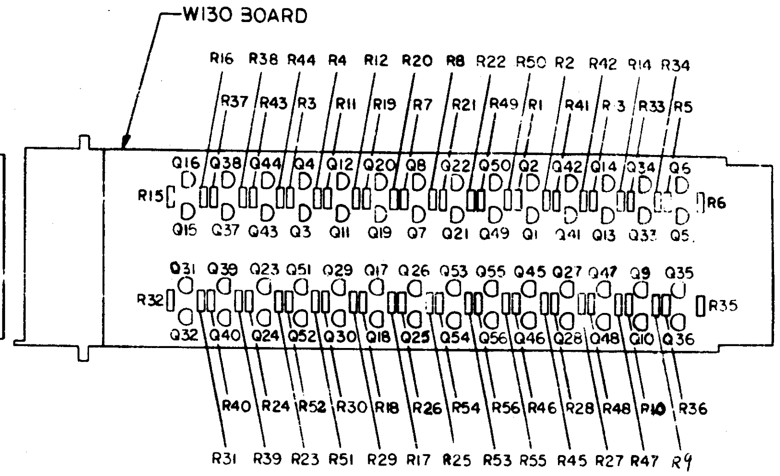

PIN NOMENCLATURE

MODULE	PROCESSOR
A	B

FIRST USED ON OPTION/MODEL
PDP11

DO NOT SCALE DRAWING

UNLESS OTHERWISE SPECIFIED DIMENSION IN INCHES TOLERANCES DECIMALS ± .005 FRACTIONS ± 1/64 ANGLES ± 0°30' FINAL SURFACE QUALITY REMOVE BURRS AND BREAK SHARP CORNERS

MATERIAL —

FINISH —

QTY.	DESCRIPTION	PART NO.	ITEM NO.

PARTS LIST

DRN. DATE 4-15-70
CHK'D. DATE 4/21/70
ENG. DATE 5/4/7Ø
PROD. ENG. DATE 5/4/7Ø
PROD. DATE 5/5/70

NEXT HIGHER ASSY A-ML-KM11-Ø

SCALE 1/1 SHEET 1 OF 3

digital EQUIPMENT CORPORATION MAYNARD MASSACHUSETTS

TITLE MAINTENANCE BOARD (1 & 2) KM-1

SIZE	CODE	NUMBER	REV.
D	BS	KM11-Ø-MB	

DIST.

REVISIONS CHANGE NO. REV. CHK

DEC FORM NO. DRD 100

D BS KM11-Ø-MB

This drawing and specifications, herein, are the property of Digital Equipment Corporation and shall not be reproduced or copied or used in whole or in part as the basis for the manufacture or sale of items without written permission.

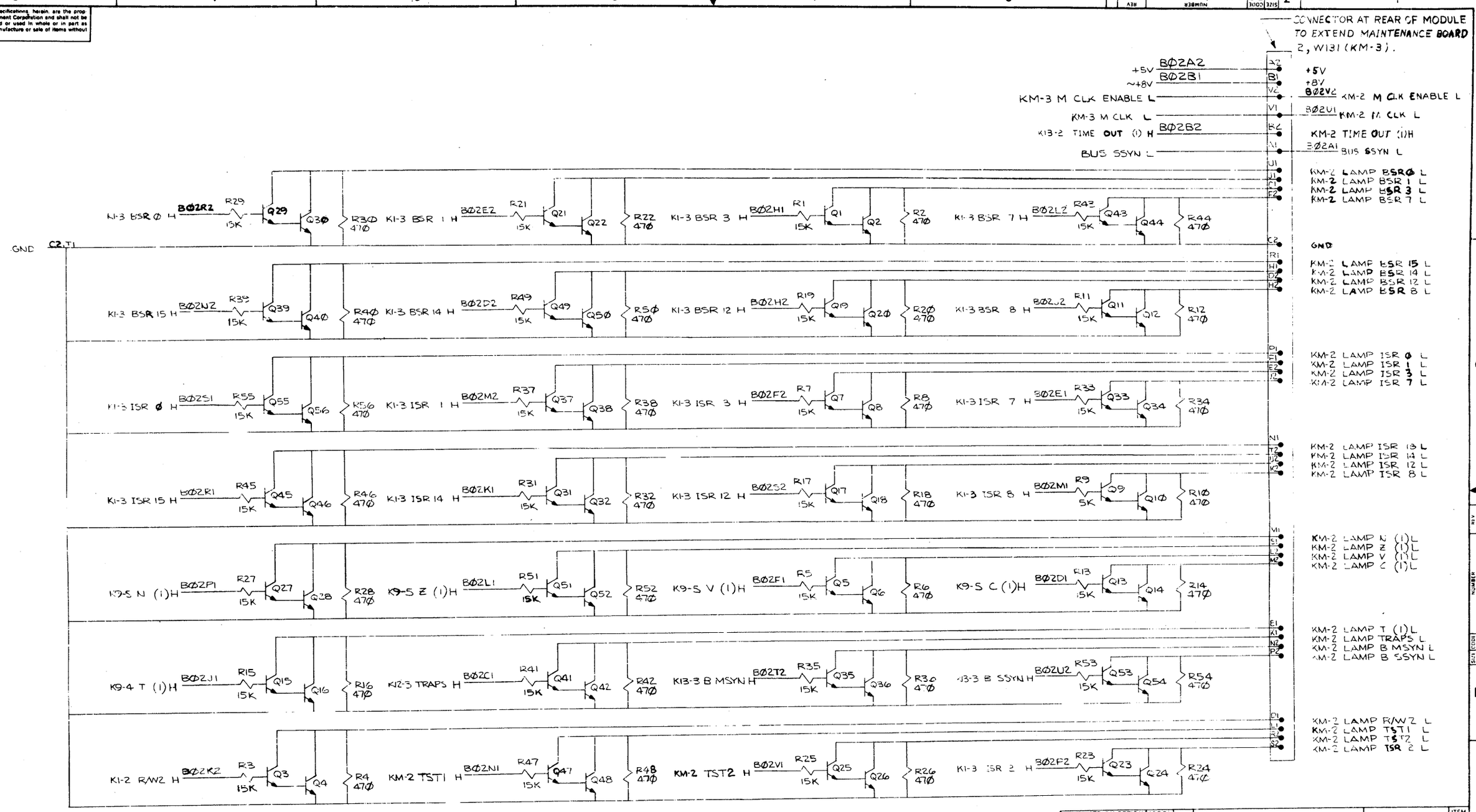

FIRST USED ON OPTION/MODEL	QTY	DESCRIPTION	PART NO	ITEM NO
PDP 11		PARTS LIST		

UNLESS OTHERWISE SPECIFIED

UNLESS OTHERWISE SPECIFIED
DIMENSION IN INCHES
TOLERANCES
DECIMALS ± .005 FRACTIONS ± 1/64 ANGLES ± 0°30'
FINAL SURFACE QUALITY
REMOVE BURRS AND BREAK SHARP CORNERS

MATERIAL

FINISH

DRN		DATE 12-18-69
CHK'D		DATE 3/2/70
ENG		DATE 3-6-70
PROJ ENG		DATE 3-6-70
PROD		DATE 5/5/70

NEXT HIGHER ASSY: A-ML-KM11-Ø

SCALE NONE

SHEET 2 OF 3

digital EQUIPMENT CORPORATION
MAYNARD, MASSACHUSETTS

TITLE: MAINTENANCE BOARD (1)

W13Ø KM-2

SIZE D CODE BS NUMBER KM11 Ø MB REV

DIST

REVISIONS: REV | CHANGE NO | CHK

DEC FORM NO DRD 102A

This drawing and specifications, herein, are the property of Digital Equipment Corporation and shall not be reproduced or copied or used in whole or in part as the basis for the manufacture or sale of items without written permission

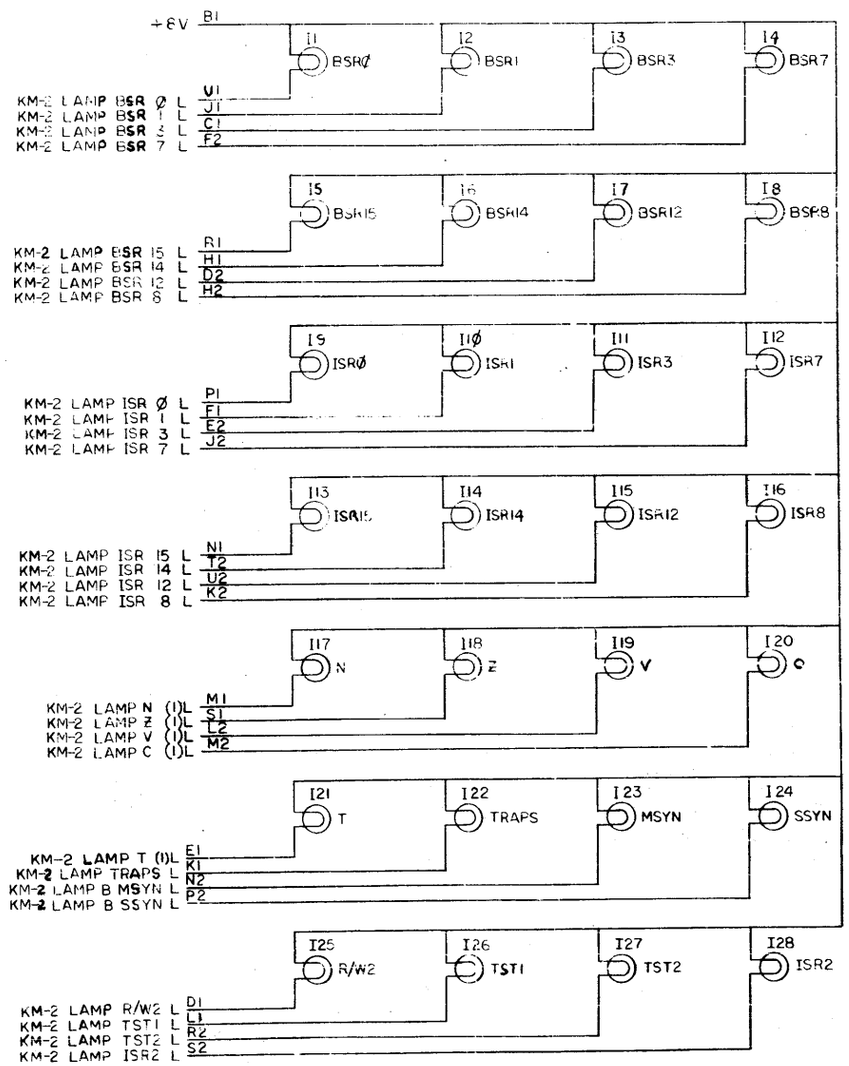

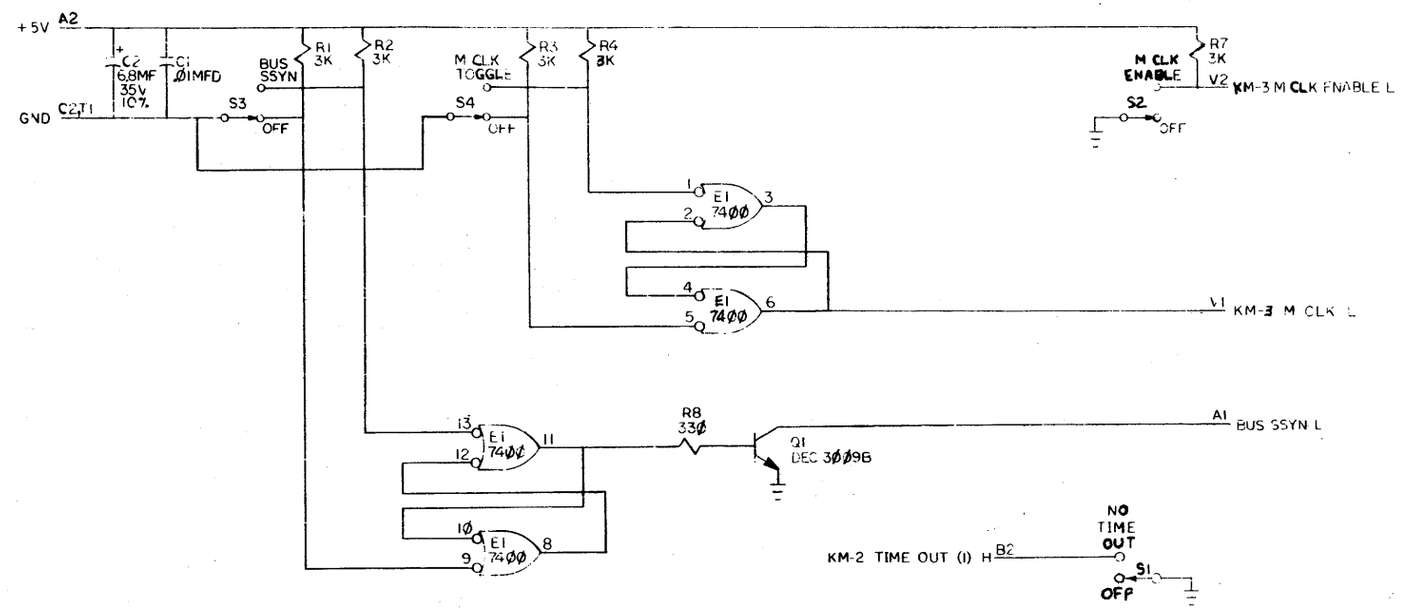

FIRST USED ON OPTION/MODEL	QTY.	DESCRIPTION	PART NO.	ITEM NO.
PDP 11		PARTS LIST		

UNLESS OTHERWISE SPECIFIED

UNLESS OTHERWISE SPECIFIED
DIMENSION IN INCHES
TOLERANCES
DECIMALS ± .005 FRACTIONS ± 1/64 ANGLES ± 0°30'
FINAL SURFACE QUALITY
REMOVE BURRS AND BREAK SHARP CORNERS

MATERIAL

FINISH

DRN. J. Giudice	DATE 2-17-69	digital EQUIPMENT CORPORATION MAYNARD, MASSACHUSETTS
CHK'D	DATE 4/29/70	
ENG.	DATE 3-6-70	TITLE MAINTENANCE BOARD(2)
PROJ. ENG.	DATE 3-6-70	
PROD. MacMald	DATE 5/5/70	W131 KM-3
NEXT HIGHER ASSEMBLY A-ML-KM11-0		SIZE D CODE BS NUMBER KM11-0-MB REV
SCALE NONE		
SHEET 3 OF 3		DIST.

REVISIONS: REV | CHANGE NO | CHK

DEC FORM 110
DRD 102A

This drawing and specifications, herein, are the property of Digital Equipment Corporation and shall not be reproduced or copied or used in whole or in part as the basis for the manufacture or sale of items without written permission.

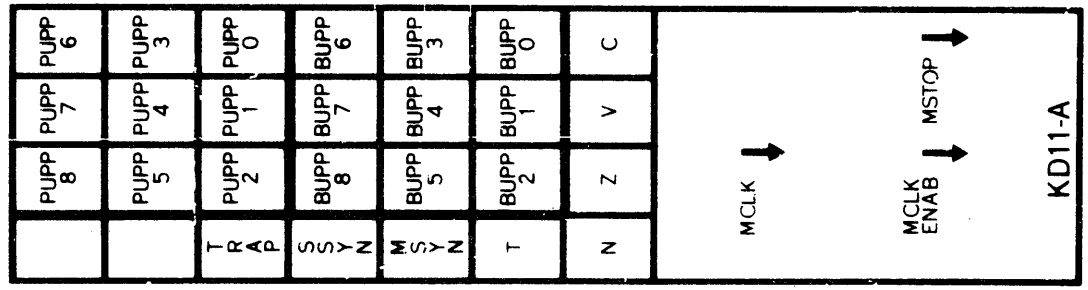

FIRST USED ON OPT / MOD

KD11 A

SPEC # 9200100-94 (BLACK)

DRN. D. Mattson	DATE 6-9-72	digital EQUIPMENT CORPORATION MAYNARD MASSACHUSETTS
CHK'D. BW	DATE 7/7/72	TITLE
ENG.	DATE 7/7/72	MAINT MODULE OVERLAY (KD11-A)
PROJ. ENG.	DATE 7/7/72	
PROD.	DATE 7/31/72	
NEXT HIGHER ASSY C-MD-5509081-0-C		SIZE A / CODE SS / NUMBER 5509081-0-12 / REV.
SCALE		
SHEET OF		DIST.

REVISIONS		
REV.	CHANGE NO.	CHK

This drawing and specifications, herein, are the property of Digital Equipment Corporation and shall not be reproduced or copied or used in whole or in part as the basis for the manufacture or sale of items without written permission.

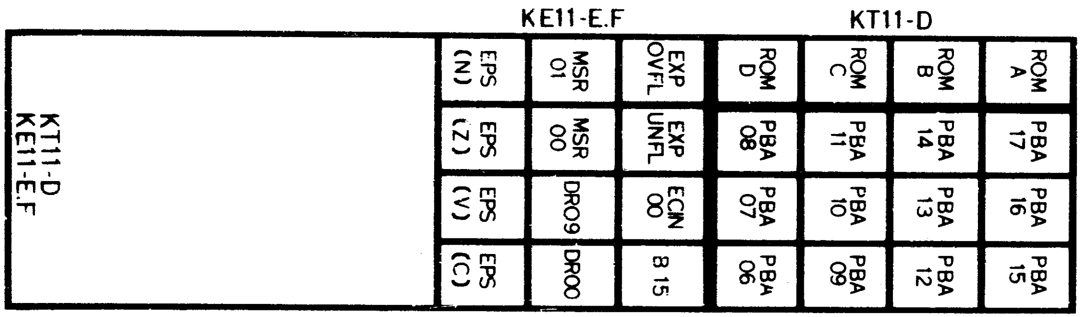

First used on opt/mod
KT11-D
KE11-E,F

REVISIONS	
REV.	
CHANGE NO.	
CHK	

SPEC # 9200101-94 (Black)

DRN. S Dumas	DATE 7-12-72	digital EQUIPMENT CORPORATION MAYNARD, MASSACHUSETTS
CHK'D. BW	DATE 7-12-72	TITLE Maint. Module OVERLAY (KT11-D KE11-E,F)
ENG.	DATE 7/25/72	
PROJ. ENG.	DATE 7/25/72	
PROD.	DATE 7/31/72	
NEXT HIGHER ASSY. C-MD-5509081-0-0		SIZE A · CODE SS · NUMBER 5509081-0-13 · REV.
SCALE		
SHEET OF		DIST. G