"THE MATERIAL HEREIN IS FOR INFORMATION PURPOSES ONLY AND IS SUBJECT TO CHANGE WITHOUT NOTICE. DIGITAL EQUIPMENT CORPORATION ASSUMES NO RESPONSIBILITY FOR ANY ERRORS WHICH MAY APPEAR HEREIN."

FIELD MAINTENANCE PRINT SET

"THIS DRAWING AND SPECIFICATIONS, HEREIN, ARE THE PROPERTY OF DIGITAL EQUIPMENT CORPORA AND SHALL NOT BE REPRODUCED OR COPIED OR USED IN WHOLE OR IN PART AS THE BASIS FOR THE MANU FACTURE OR SALE OF ITEMS WITHOUT WRITTEN PERMISSION. COPYRIGHT © 1975 , DIGITAL EQUIPMENT CORPORATION."

TABLE OF CONTENTS

FLOATING POINT PROCESSOR	B-TC-FP11-C-6
FLOW DIAGRAM FP11-C	D-FD-FP11-C-1
FRAC PROC. HIGH ORDER (FRH)	D-CS-M8126-Ø-1
FRAC PROC. LOW ORDER (FRL)	D-CS-M8127-Ø-1
FRAC PROC. ROM CONTROL (FRM)	D-CS-M8128-Ø-1
FRAC PROC. XPON PATH (FXP)	D-CS-M8129-Ø-1
SOFTWARE LIST FP11-C	A-PL-FP11-C-3
SHIPPING LIST FP11-C	A-PL-FP11-C-4
FP11-C INSTALL. AND ACCEPT. PROC.	A-SP-FP11-C-5

UNIT VARIATIONS COVERED BY THIS PRINT SET
FP11-C

FP11-C

Field Maintenance Print Set

Digital Equipment Corporation

PRINT SET ORDER NO.
MPØØØ38

REVISIONS		
REV.		
CHG. NO.		
DATE		

USED ON OPTION/MODEL	
11/72	
SHEET I OF 1	

DRN. D. HEALY	DATE 12/16/75	TITLE: FLOATING POINT PROCESSOR FP11-C
CHK'D D. HEALY	DATE 12/17/75	
PROJ. ENG.	DATE 12/22/75	
FIELD SERV.	DATE	

SIZE	CODE	NUMBER	REV.
B	TC	FP11-C-6	

DIST.

digital

EN-01124-16-N675-(327)

DRB 124

Rison

"THIS DRAWING AND SPECIFICATIONS, HEREIN, ARE THE PROPERTY OF DIGITAL EQUIPMENT CORPORATION AND SHALL NOT BE REPRODUCED OR COPIED OR USED IN WHOLE OR IN PART AS THE BASIS FOR THE MANUFACTURE OR SALE OF ITEMS WITHOUT WRITTEN PERMISSION.
COPYRIGHT © 1975 DIGITAL EQUIPMENT CORPORATION"

SHIFT CONTROL [8:5]
- Ø0 - EALU
- Ø1 - DIV
- Ø2 - MUL
- Ø3 - NORM
- Ø4 - ALIGN
- Ø5 - NOT USED
- Ø6 - NOT USED
- Ø7 - Ø SHIFT
- 1X - CLR CONTROL AT T2 LOAD CONTROL WITH SPECIFIED FUNCTION AT T3

MISCELLANEOUS CONTROL [25:27]
- Ø - NOP
- 1 - FPS CLK
- 2 - UBRK CLK
- 3 - DOMX MOD
- 4 - OBUF CLK
- 5 - CLR QR
- 6 - LDFP REQ
- 7 - FP CLASS

EALUC [53:55]
- Ø - A PLUS B
- 1 - A PLUS B PLUS 1
- 2 - A MINUS B MINUS 1
- 3 - A MINUS B
- 4 - A
- 5 - B
- 6 - NOT USED
- 7 - NOT USED

FALUC [56:59]
- Ø - A∘B
- 1 - ∼A
- 2 - B
- 3 - A∘∼B
- 4 - A PLUS B
- 5 - A PLUS B PLUS 1
- 6 - A MINUS 1
- 7 - A MINUS B
- 10 - ZERO
- 11 - NOT USED
- 12 - NOT USED
- 13 - NOT USED
- 14 - A PLUS B CONDITIONAL (SWR)
- 15 - NOT USED
- 16 - MUL/DIV CONDITIONAL (SWR)
- 17 - A

QMX [32:33]
- Ø — SCR OUT
- 1 — Q SHIFTER
- 2 — CONDITIONAL SCR OUT (FD)
- 3 — QUOTIENT

FMX [34:35]
- Ø — SCR OUT
- 1 — Q SHIFTER
- 2 — CONDITIONAL SCR OUT (FD)
- 3 — ROUND, INT INC

To load exec. LOUB
Micro Break Reg FXPC
See page 7-2
Scope sync 5082

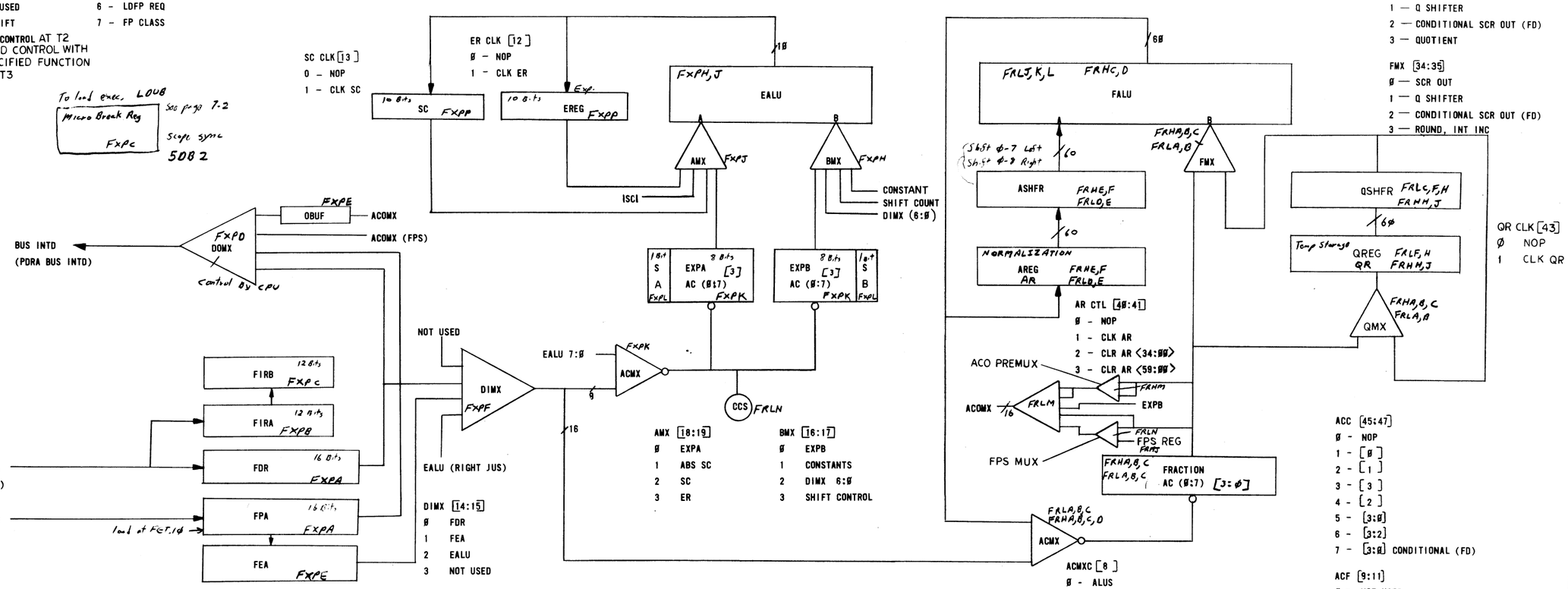

QR CLK [43]
- Ø NOP
- 1 CLK QR

AR CTL [40:41]
- Ø - NOP
- 1 - CLK AR
- 2 - CLR AR <34:ØØ>
- 3 - CLR AR <59:ØØ>

DIMX [14:15]
- Ø FDR
- 1 FEA
- 2 EALU
- 3 NOT USED

AMX [18:19]
- Ø EXPA
- 1 ABS SC
- 2 SC
- 3 ER

BMX [16:17]
- Ø EXPB
- 1 CONSTANTS
- 2 DIMX 6:Ø
- 3 SHIFT CONTROL

ACC [45:47]
- Ø - NOP
- 1 - [Ø]
- 2 - [1]
- 3 - [3]
- 4 - [2]
- 5 - [3:Ø]
- 6 - [3:2]
- 7 - [3:Ø] CONDITIONAL (FD)

ACMXC [8]
- Ø - ALUS
- 1 - DIMX

ACF [9:11]
- Ø - NOT USED
- 1 - ACDV1/ACDV1
- 2 - ACS/ACD
- 3 - ACD/ACD
- 4 - ACS/ACS
- 5 - ACD/ACS
- 6 - AC6/AC6
- 7 - AC7/AC7 EXPA/ EXPB AND FRACTION

FILL CONTROL [36:37]
- Ø - RS·Ø·QR
- 1 - RS·1·QR
- 2 - RS·Ø·AR
- 3 - RS·AR59·AR

NEXT ADR [68:75]
SEE FLOWS

UBR [65:67]
- Ø - NO BRANCH
- 1 - 7 - BRANCH ENABLE (SEE FLOWS)

UAF [60:61]
- Ø - BRANCH ENABLE Ø
- 1 - BRANCH ENABLE 3:2
- 2 - BRANCH ENABLE 1:Ø
- 3 - BRANCH ENABLE 3:Ø

UJMP [64]
- Ø - NOP
- 1 - TRAP TO 3 IF NA (1:Ø)=3

LONG CYCLE [44]
- Ø - 18Ø NS STATE
- 1 - 24Ø NS STATE

ATTN WAIT [62]
- Ø - NOP
- 1 - WAIT FOR FPATTN

ACKN WAIT [63]
- Ø - NOP
- 1 - WAIT FOR FPACKN

CNST [Ø:7]
- Ø - 377 CONSTANTS

SIGN CONTROL [28:29:42]
- Ø - SD ← SD
- 1 - SD ← SCØ9
- 2 - SD ← SS
- 3 - SD ← ∼SS
- 4 - SD ← SD XOR SS
- 5 - SD ← SD XOR SUBTRACT
- 6 - SD ← Ø
- 7 - SD ← SCR OUT

FIR CLK [24]
- Ø - NOP
- 1 - LOAD FIRB

FPC1 [21]
- Ø - DATI
- 1 - DATO

FP REG WR [2Ø]
- Ø - NOP
- 1 - WRITE CPU RX

ACOMX [38:39]
- Ø - ACX [Ø] / FPS
- 1 - ACX [1]
- 2 - ACX [2]
- 3 - ACX [3]

EN FMØ [22]
- Ø - DISABLE FMØ TRAP
- 1 - ENABLE FMØ TRAP

FP SYNC [23]
- Ø - NOP
- 1 - FP SYNC

DISABLE INTR [52]
- Ø - ALLOW INTR CLR
- 1 - DISABLE INTR CLR

FLOATING CONDITION CODES [30:31]
- Ø — FN,FZ ← CONDITIONS,FC,FV ← Ø
- 1 — FN,FZ,FV ← CONDITIONS FC ← Ø
- 2 — FC ← 1
- 3 — NOP

FEC IS AC7[1]
FEA IS AC7[2]

FIRST USED ON OPTION/MODEL	QTY.	DESCRIPTION	PART NO.	ITEM NO.
FPII-C		PARTS LIST		

DIMENSIONAL TOLERANCE
DIMENSIONS ARE MILLIMETERS / INCHES
UNLESS OTHERWISE SPECIFIED

MILLIMETERS	INCHES	ANGLES
X.XX = ±0.10	.XXX = ±.005	±0° 30'
X.X = ±0.5	.XX = ±.02	
X = ±2.	.X = ±.1	

THIRD ANGLE PROJECTION
REMOVE BURRS AND BREAK SHARP CORNERS SURFACE QUALITY ✓
MATERIAL —//—
FINISH —//—

		DATE
DRN.	M. Baylis	11/5/75
CHKD.	B. Hoak	11/18/75
ENG.	Allan Helmuth	12-9-75
PROJ. ENG.	Allan Helmuth	12-9-75
PROD.	Kurt Taylor	12/9/75

NEXT HIGHER ASSY. —//—
SCALE —//—
SHEET 1 OF 15

digital

TITLE
FLOW DIAGRAM
FPII-C

SIZE	CODE	NUMBER	REV.
D	FD	FPII-C-1	

DIST.

REVISIONS | REV. | CHANGE NO. | CHK

DEC FORM NO. DRD 102-C

"THIS DRAWING AND SPECIFICATIONS, HEREIN, ARE THE PROPERTY OF DIGITAL EQUIPMENT CORPORATION AND SHALL NOT BE REPRODUCED OR COPIED OR USED IN WHOLE OR IN PART AS THE BASIS FOR THE MANUFACTURE OR SALE OF ITEMS WITHOUT WRITTEN PERMISSION. COPYRIGHT © 1975 DIGITAL EQUIPMENT CORPORATION"

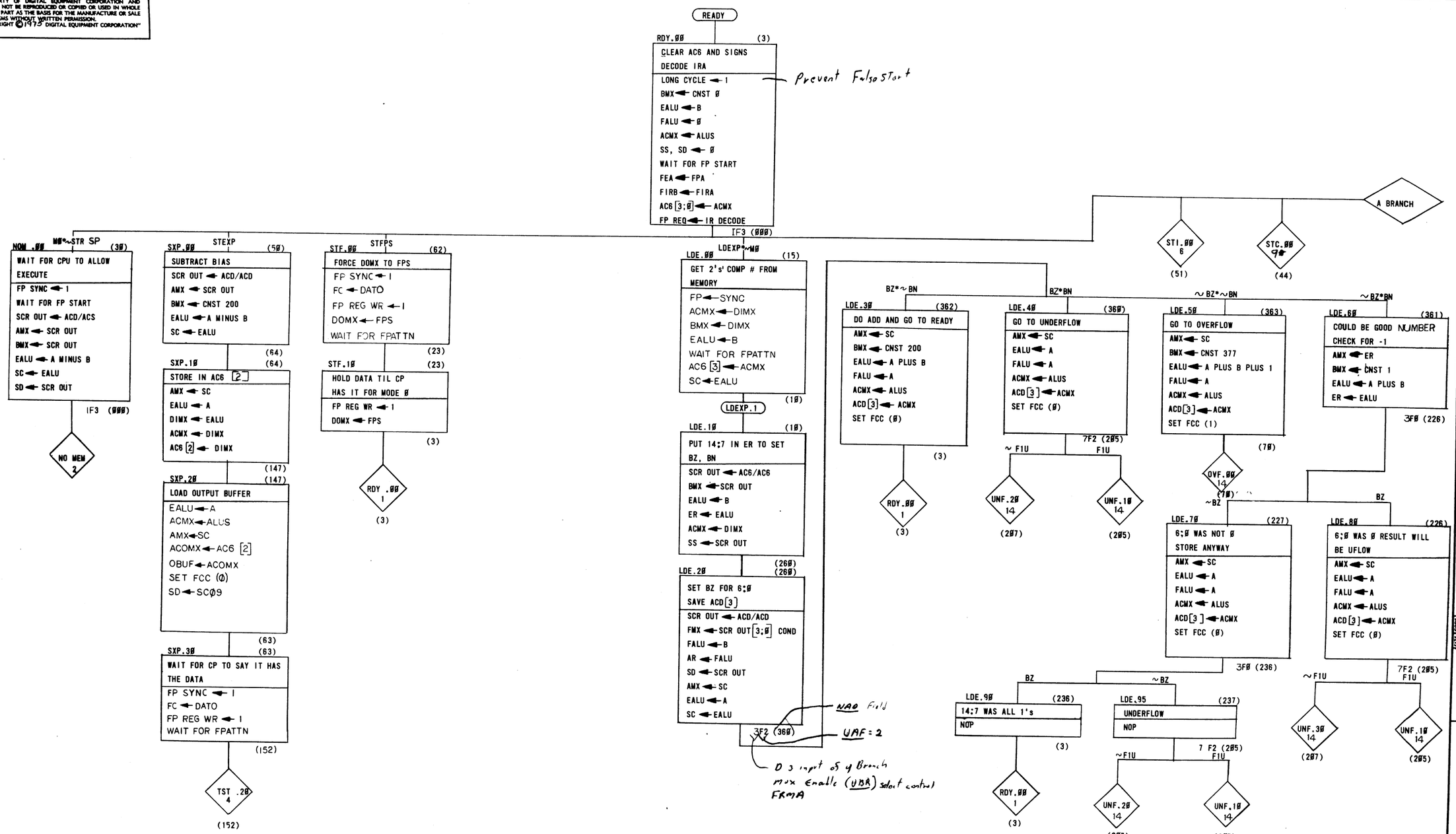

REVISIONS		
CHK	CHANGE NO.	REV.

TITLE	SIZE	CODE	NUMBER	REV.
FLOW DIAGRAM FPII-C (FLOWS 1)	D	FD	FPII-C-1	
SCALE —//—	SHEET 2 OF 15	DIST.		

DEC FORM NO. DRD 138

SIZE D CODE FD NUMBER FPII-C-1 REV.

"THIS DRAWING AND SPECIFICATIONS, HEREIN, ARE THE PROPERTY OF DIGITAL EQUIPMENT CORPORATION AND SHALL NOT BE REPRODUCED OR COPIED OR USED IN WHOLE OR IN PART AS THE BASIS FOR THE MANUFACTURE OR SALE OF ITEMS WITHOUT WRITTEN PERMISSION.
COPYRIGHT © 1975 DIGITAL EQUIPMENT CORPORATION"

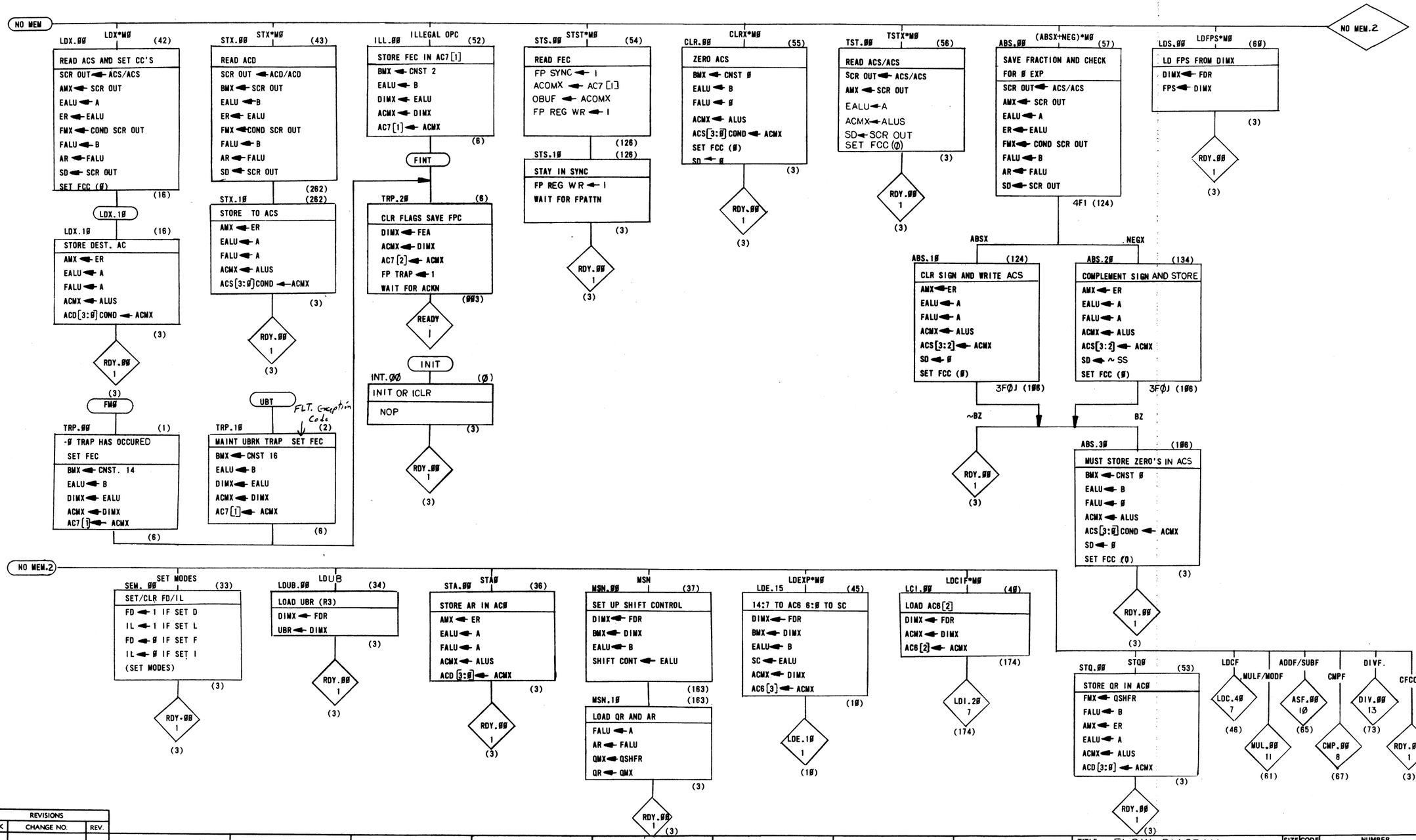

REVISIONS		
CHK	CHANGE NO.	REV.

TITLE	SIZE	CODE	NUMBER	REV.
FLOW DIAGRAM FPII-C (FLOWS 2)	D	FD	FPII-C-1	
SCALE //	SHEET 3 OF 15	DIST.		

DEC FORM NO. DRD 138

"THIS DRAWING AND SPECIFICATIONS, HEREIN, ARE THE PROPERTY OF DIGITAL EQUIPMENT CORPORATION AND SHALL NOT BE REPRODUCED OR COPIED OR USED IN WHOLE OR IN PART AS THE BASIS FOR THE MANUFACTURE OR SALE OF ITEMS WITHOUT WRITTEN PERMISSION.
COPYRIGHT © 1975 - DIGITAL EQUIPMENT CORPORATION"

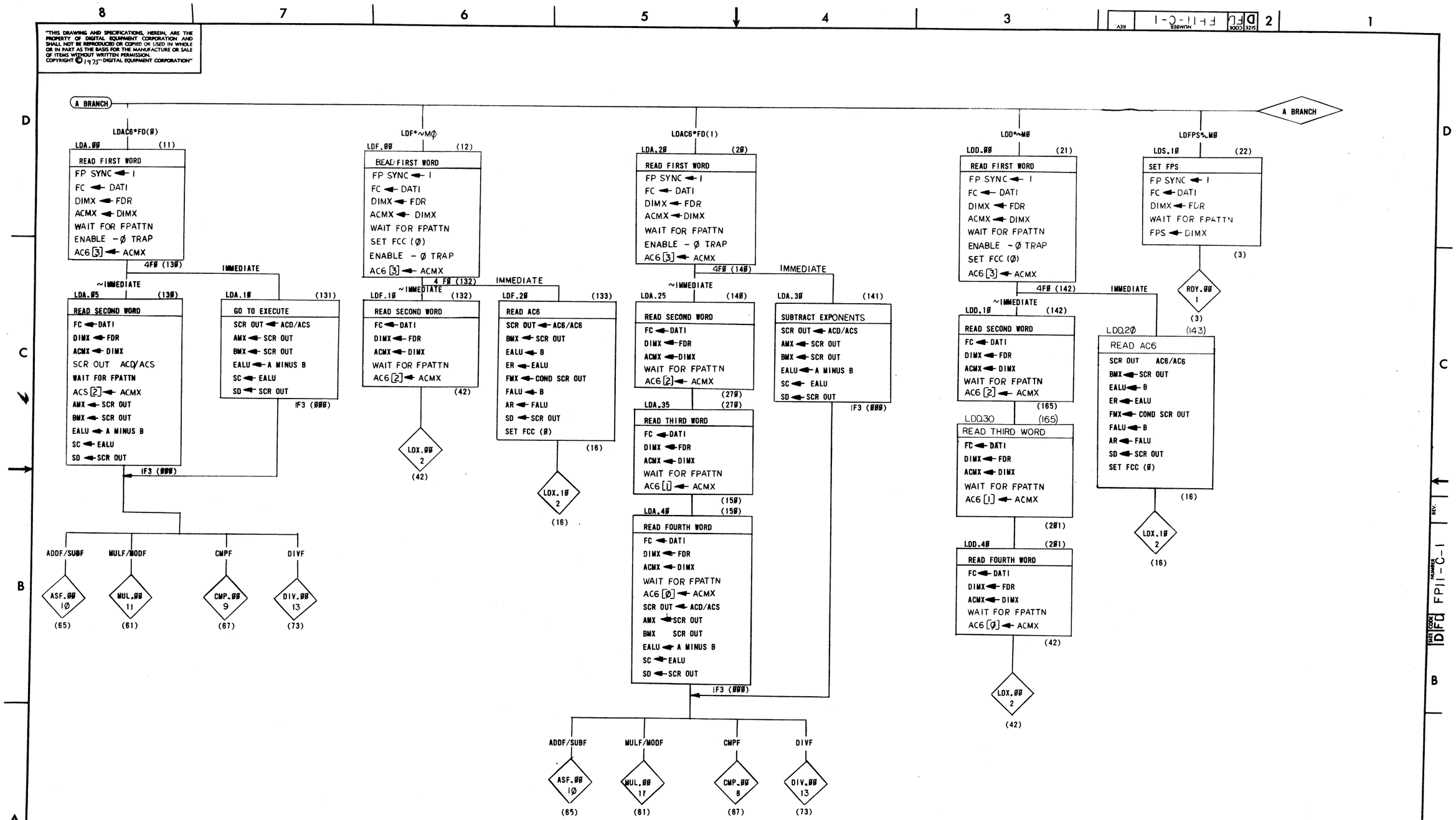

REVISIONS		
CHK	CHANGE NO.	REV.

TITLE	SIZE	CODE	NUMBER	REV.
FLOW DIAGRAM FPII-C (FLOWS 3)	D	FD	FPII-C-1	
SCALE —	SHEET 4 OF 15	DIST.		

DEC FORM NO. DRD 138

"THIS DRAWING AND SPECIFICATIONS, HEREIN, ARE THE PROPERTY OF DIGITAL EQUIPMENT CORPORATION AND SHALL NOT BE REPRODUCED OR COPIED OR USED IN WHOLE OR IN PART AS THE BASIS FOR THE MANUFACTURE OR SALE OF ITEMS WITHOUT WRITTEN PERMISSION.
COPYRIGHT © 1975 DIGITAL EQUIPMENT CORPORATION"

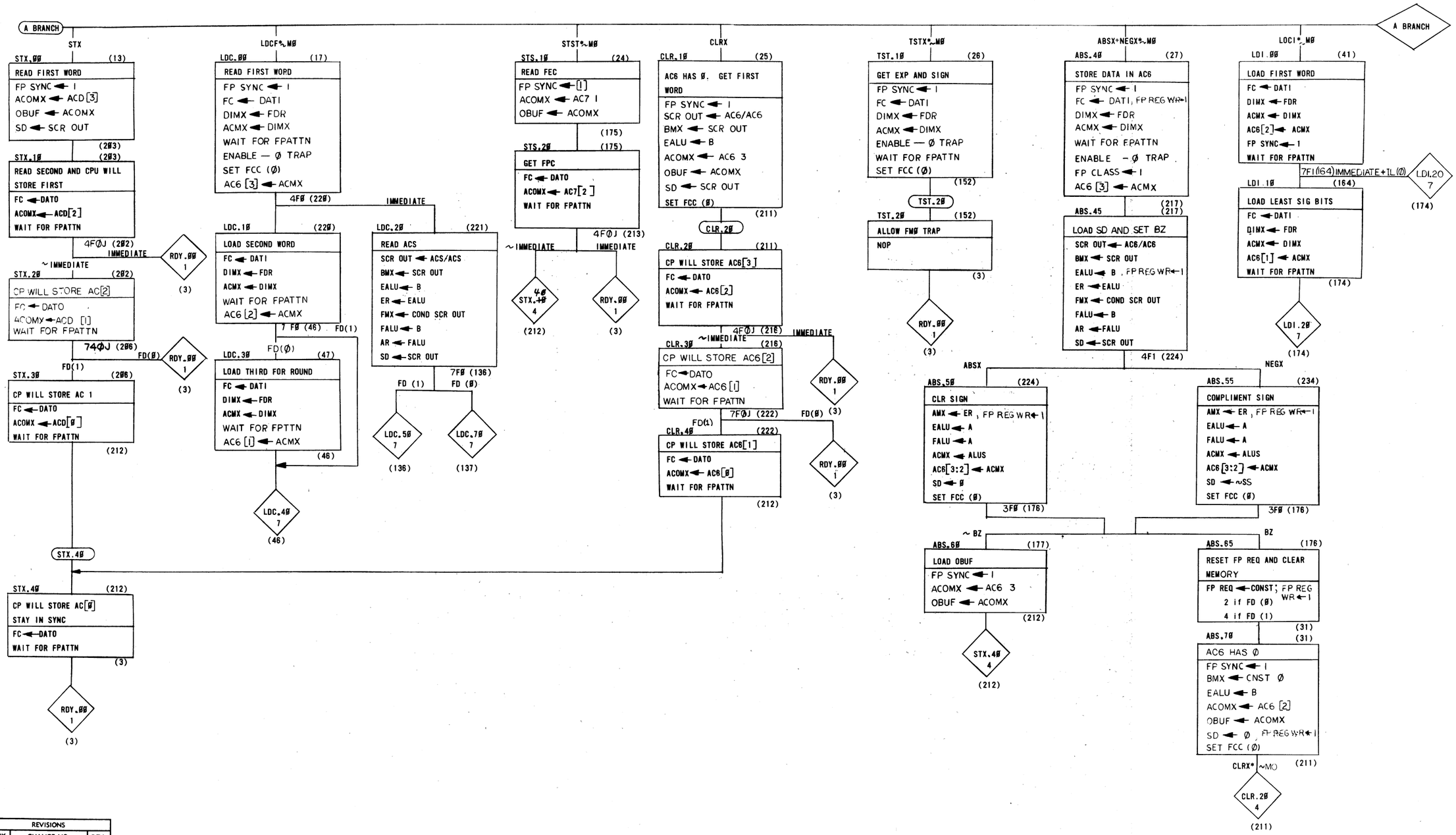

REVISIONS		
CHK	CHANGE NO.	REV.

TITLE	SIZE	CODE	NUMBER	REV.
FLOW DIAGRAM FPII-C (FLOWS 4)	D	FD	FPII-C-1	
SCALE — SHEET 5 OF 15	DIST.			

DEC FORM NO. DRD 138

"THIS DRAWING AND SPECIFICATIONS, HEREIN, ARE THE PROPERTY OF DIGITAL EQUIPMENT CORPORATION AND SHALL NOT BE REPRODUCED OR COPIED OR USED IN WHOLE OR IN PART AS THE BASIS FOR THE MANUFACTURE OR SALE OF ITEMS WITHOUT WRITTEN PERMISSION.
COPYRIGHT © 1975 DIGITAL EQUIPMENT CORPORATION"

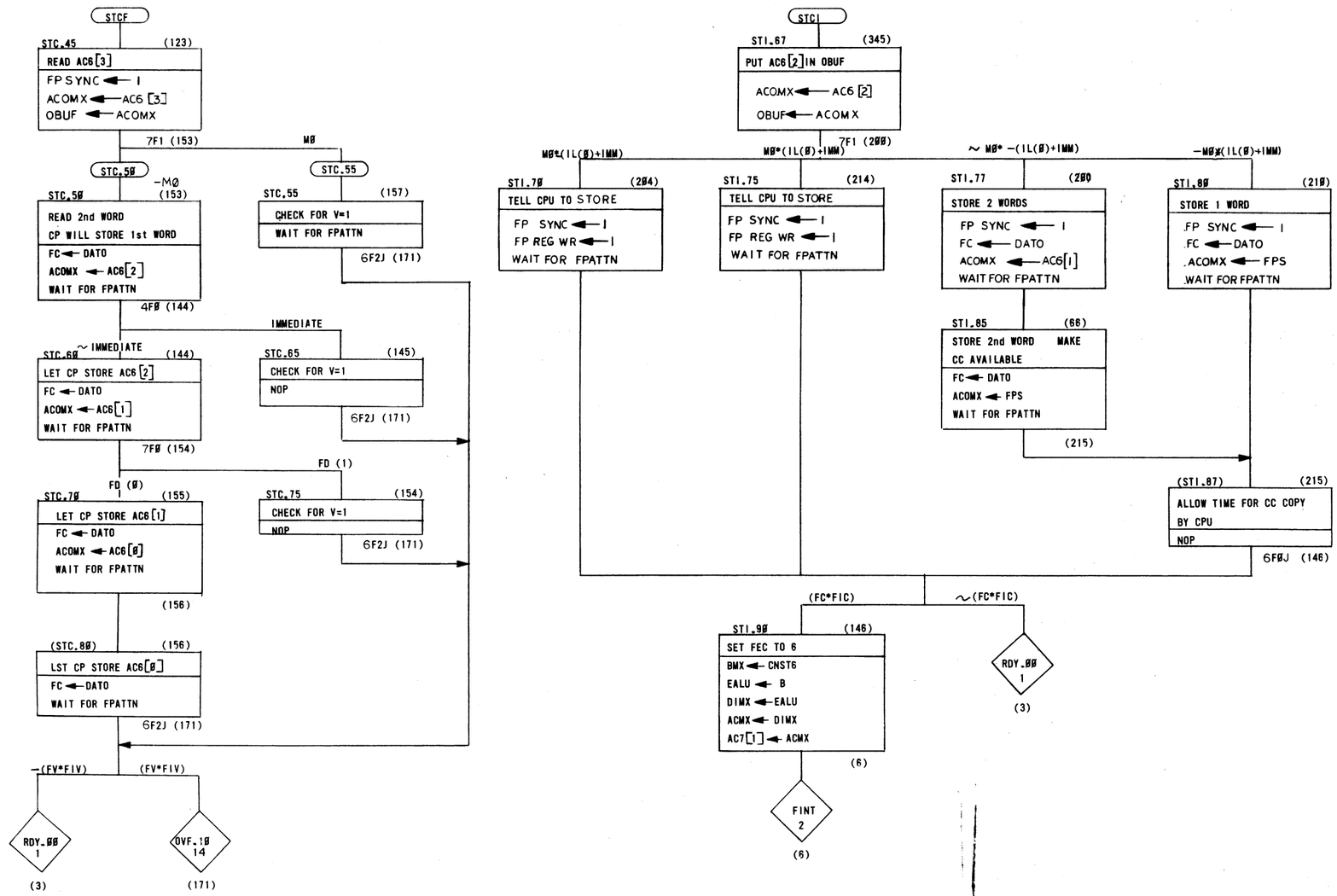

REVISIONS		
CHK	CHANGE NO.	REV.

TITLE FLOW DIAGRAM FPII-C (FLOWS 5)

SIZE D CODE FD NUMBER FPII-C-1 REV.

SCALE — SHEET 6 OF 15 DIST.

DEC FORM NO. DRD 138

"THIS DRAWING AND SPECIFICATIONS, HEREIN, ARE THE PROPERTY OF DIGITAL EQUIPMENT CORPORATION AND SHALL NOT BE REPRODUCED OR COPIED OR USED IN WHOLE OR IN PART AS THE BASIS FOR THE MANUFACTURE OR SALE OF ITEMS WITHOUT WRITTEN PERMISSION. COPYRIGHT © 1975 DIGITAL EQUIPMENT CORPORATION"

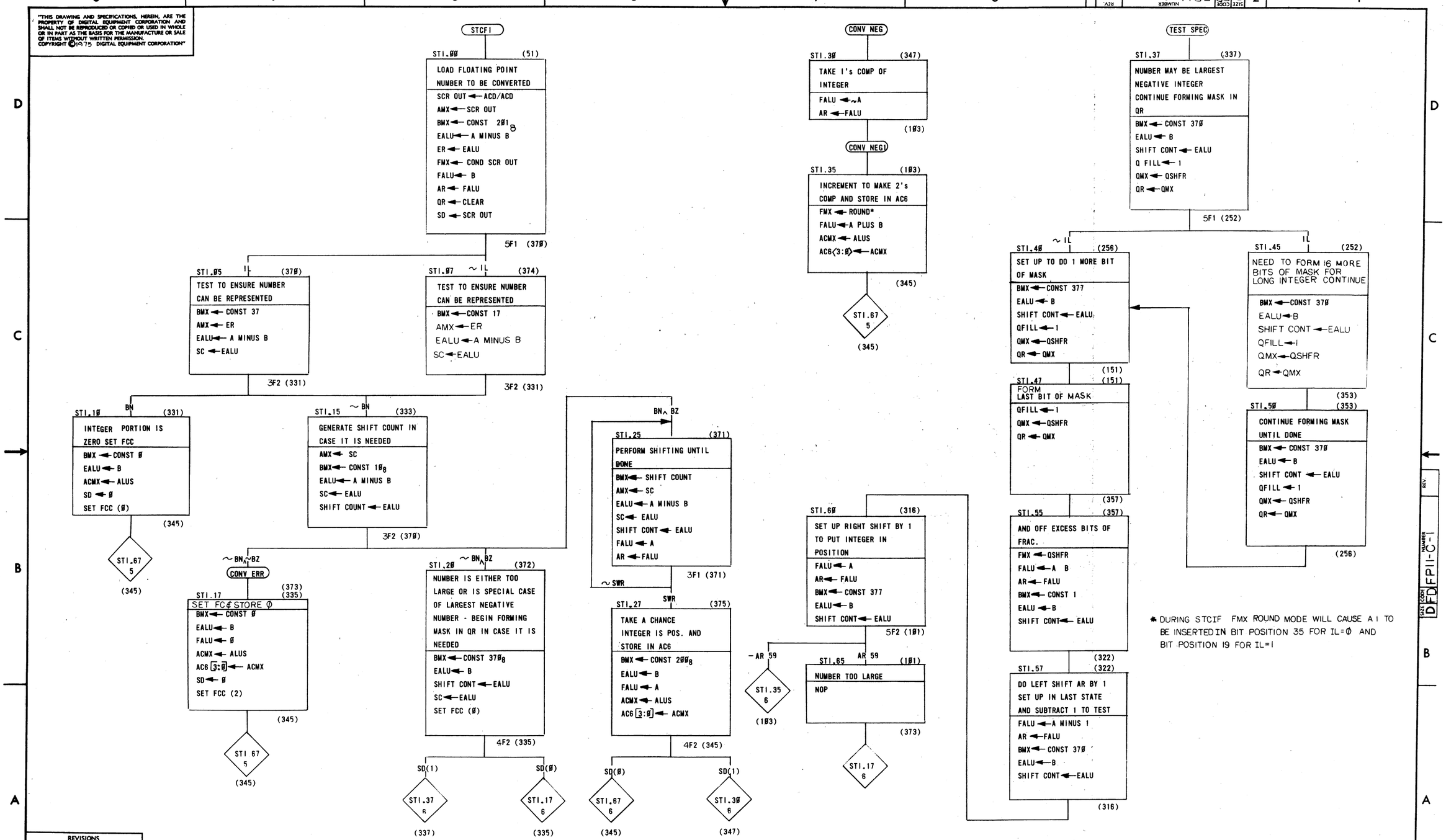

* DURING STCIF FMX ROUND MODE WILL CAUSE A 1 TO BE INSERTED IN BIT POSITION 35 FOR IL=0 AND BIT POSITION 19 FOR IL=1

REVISIONS		
CHK	CHANGE NO.	REV.

TITLE	SIZE	CODE	NUMBER	REV.
FLOW DIAGRAM FPII-C (FLOWS 6)	D	FD	FPII-C-1	
SCALE --	SHEET 7 OF 15	DIST.		

DEC FORM NO. DRD 138

"THIS DRAWING AND SPECIFICATIONS, HEREIN, ARE THE PROPERTY OF DIGITAL EQUIPMENT CORPORATION AND SHALL NOT BE REPRODUCED OR COPIED OR USED IN WHOLE OR IN PART AS THE BASIS FOR THE MANUFACTURE OR SALE OF ITEMS WITHOUT WRITTEN PERMISSION. COPYRIGHT © 1975 DIGITAL EQUIPMENT CORPORATION"

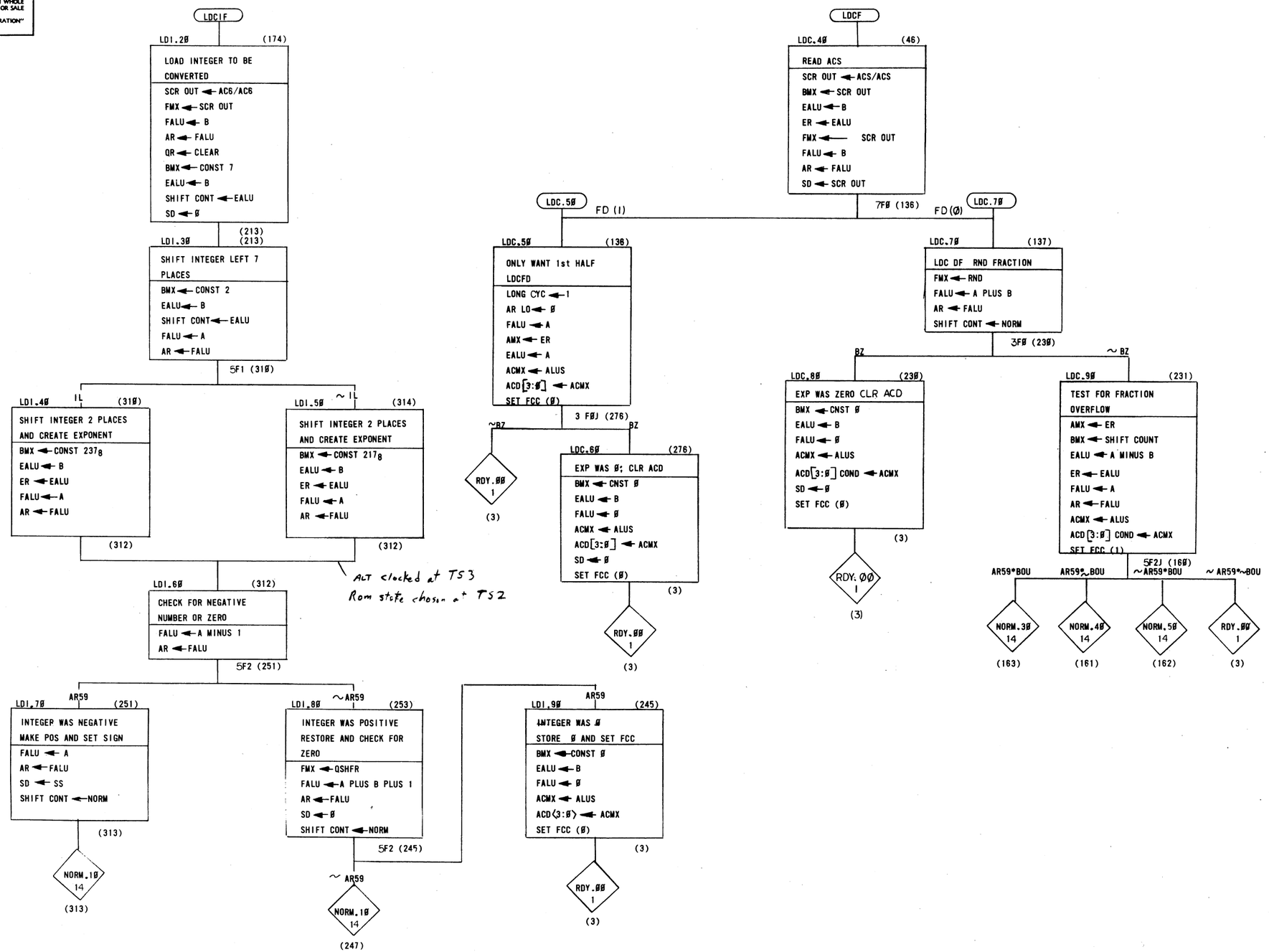

REVISIONS		
CHK	CHANGE NO.	REV.

TITLE	SIZE	CODE	NUMBER	REV.
FLOW DIAGRAM FPII-C (FLOWS 7)	D	FD	FPII-C-1	
SCALE —//— SHEET 8 OF 15	DIST.			

DEC FORM NO. DRD 138

"THIS DRAWING AND SPECIFICATIONS, HEREIN, ARE THE PROPERTY OF DIGITAL EQUIPMENT CORPORATION AND SHALL NOT BE REPRODUCED OR COPIED OR USED IN WHOLE OR IN PART AS THE BASIS FOR THE MANUFACTURE OR SALE OF ITEMS WITHOUT WRITTEN PERMISSION.
COPYRIGHT © 1975 DIGITAL EQUIPMENT CORPORATION"

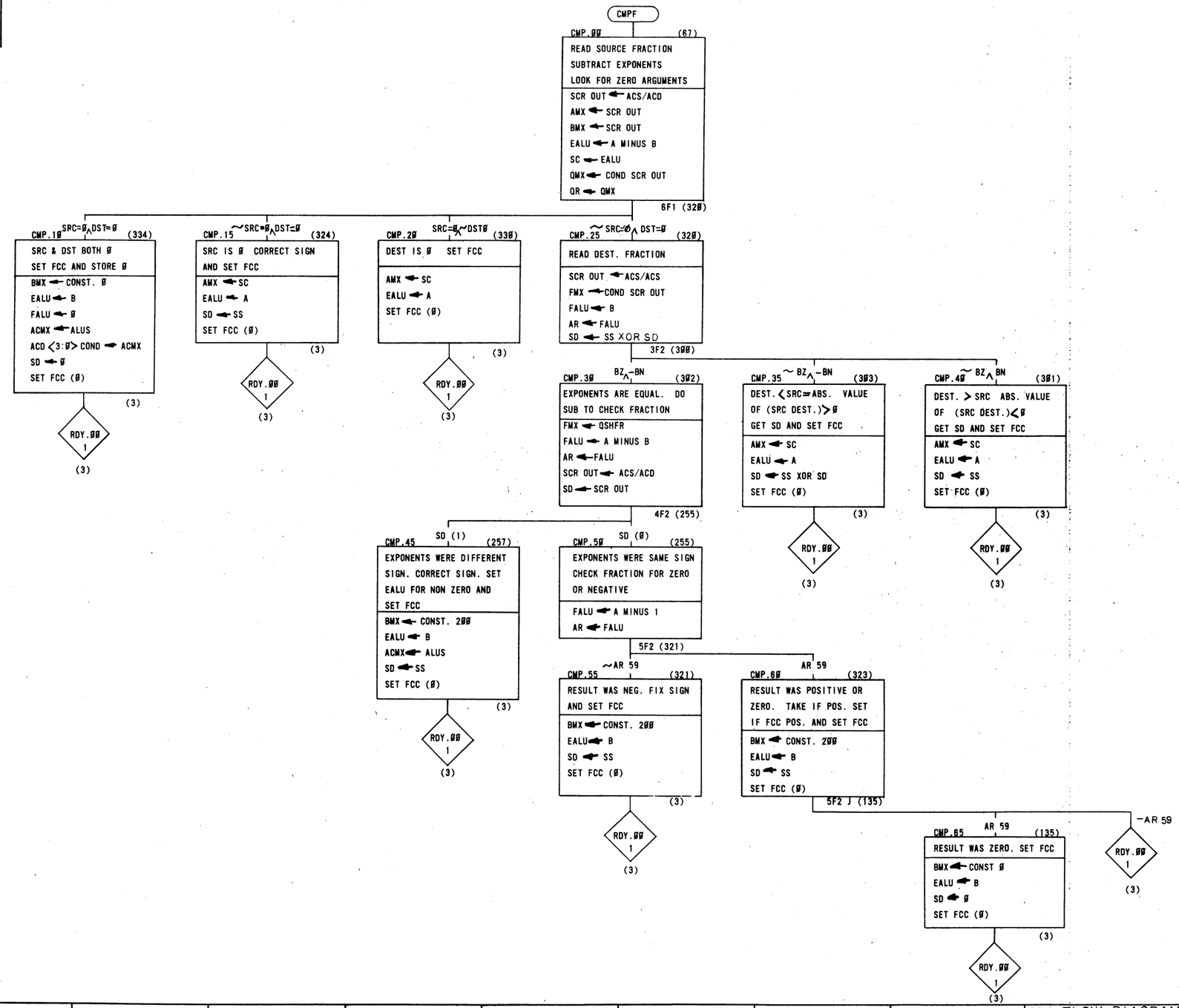

REVISIONS		
CHK	CHANGE NO.	REV.

TITLE	SIZE	CODE	NUMBER	REV.
FLOW DIAGRAM FPII-C (FLOW 8)	D	FD	FPII-C-1	
SCALE —//—	SHEET 9 OF 15	DIST.		

DEC FORM NO. DRD 128

"THIS DRAWING AND SPECIFICATIONS, HEREIN, ARE THE PROPERTY OF DIGITAL EQUIPMENT CORPORATION AND SHALL NOT BE REPRODUCED OR COPIED OR USED IN WHOLE OR IN PART AS THE BASIS FOR THE MANUFACTURE OR SALE OF ITEMS WITHOUT WRITTEN PERMISSION.
COPYRIGHT © 1975 DIGITAL EQUIPMENT CORPORATION"

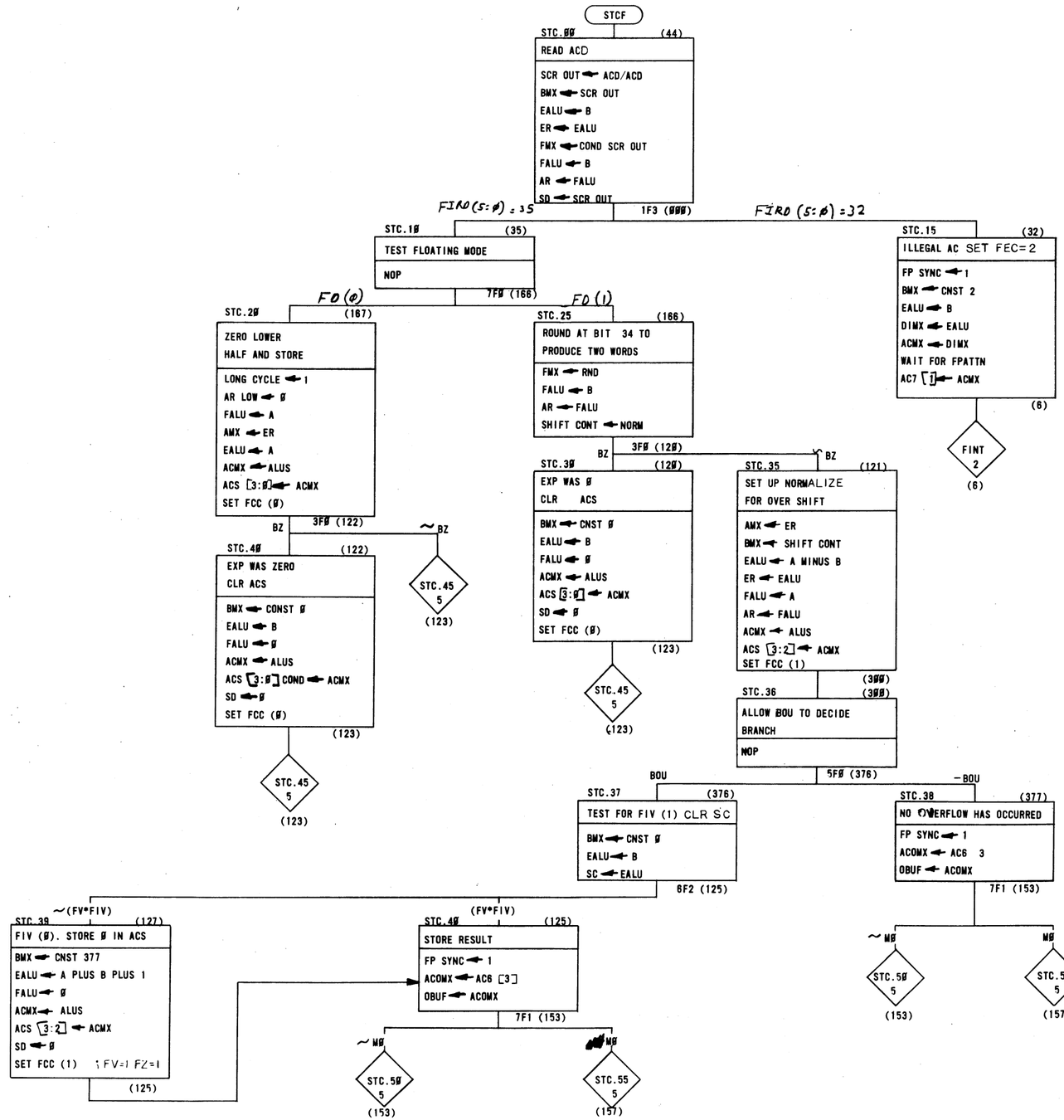

REVISIONS		
CHK	CHANGE NO.	REV.

TITLE	SIZE	CODE	NUMBER	REV.
FLOW DIAGRAM FPII-C (FLOWS 0)	D	FD	FPII-C-1	
SCALE	SHEET 10 OF 15	DIST.		

DEC FORM NO. DRD 138

"THIS DRAWING AND SPECIFICATIONS, HEREIN, ARE THE PROPERTY OF DIGITAL EQUIPMENT CORPORATION AND SHALL NOT BE REPRODUCED OR COPIED OR USED IN WHOLE OR IN PART AS THE BASIS FOR THE MANUFACTURE OR SALE OF ITEMS WITHOUT WRITTEN PERMISSION.
COPYRIGHT © 1971 75 DIGITAL EQUIPMENT CORPORATION"

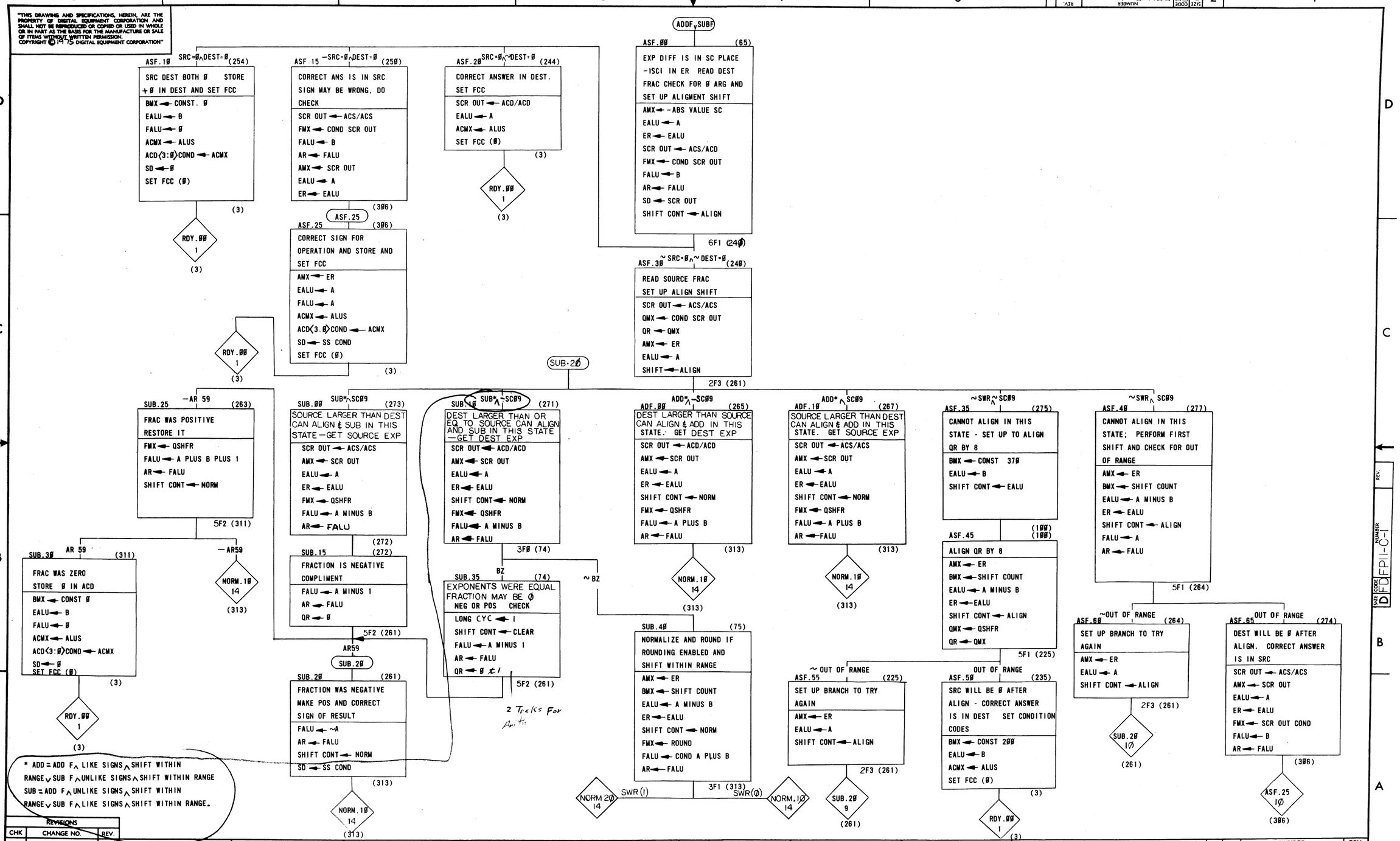

REVISIONS		
CHK	CHANGE NO.	REV.

TITLE	SIZE	CODE	NUMBER	REV.
FLOW DIAGRAM FPII-C (FLOWS 1Ø)	D	FD	FPII-C-1	
SCALE	SHEET 11 OF 15	DIST.		

DEC FORM NO. DRD 136

"THIS DRAWING AND SPECIFICATIONS, HEREIN, ARE THE PROPERTY OF DIGITAL EQUIPMENT CORPORATION AND SHALL NOT BE REPRODUCED OR COPIED OR USED IN WHOLE OR IN PART AS THE BASIS FOR THE MANUFACTURE OR SALE OF ITEMS WITHOUT WRITTEN PERMISSION.
COPYRIGHT © 1975 DIGITAL EQUIPMENT CORPORATION"

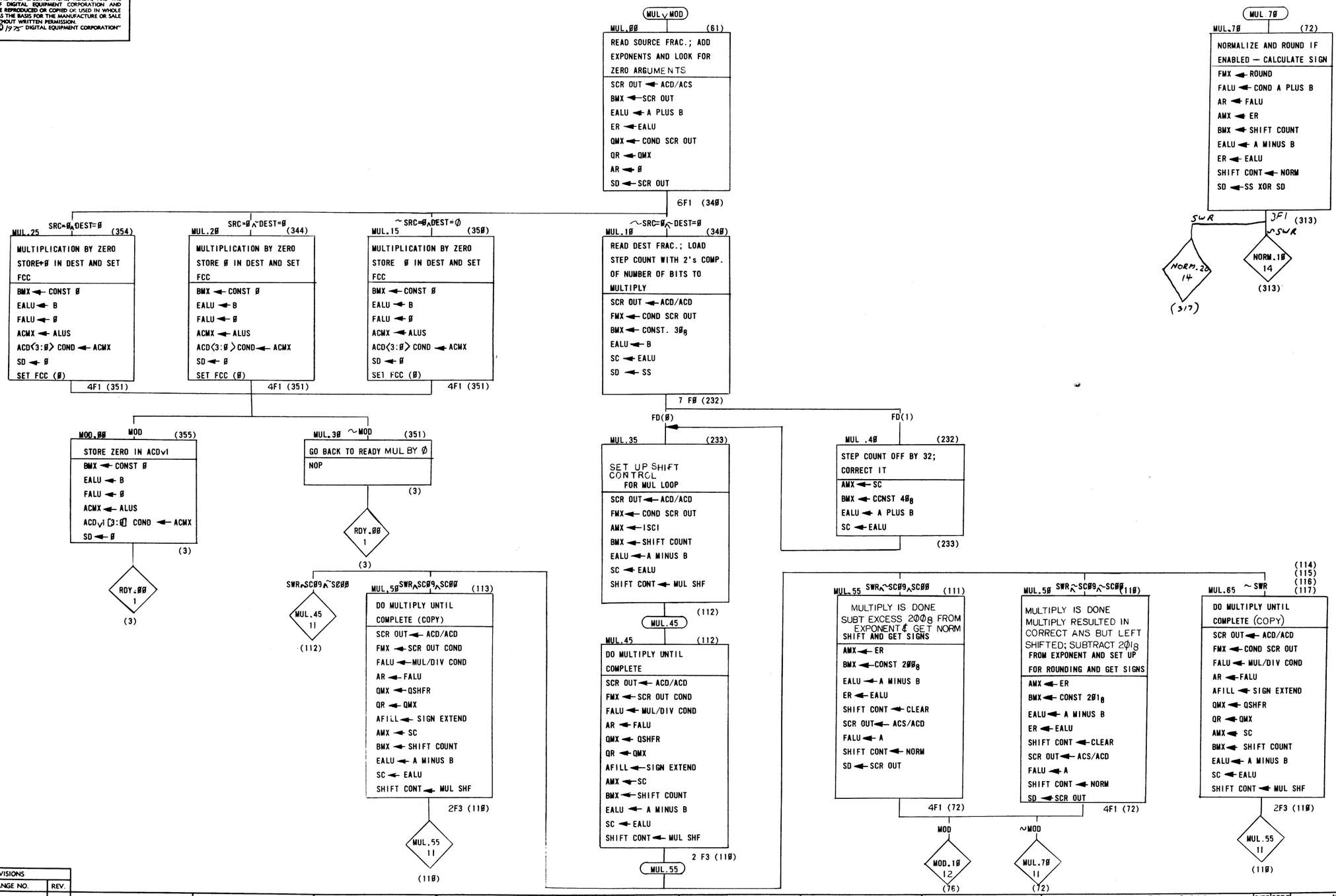

REVISIONS		
CHK	CHANGE NO.	REV.

TITLE FLOW DIAGRAM FPII-C (FLOWS 11)
SIZE D CODE FD NUMBER FPII-C-1 REV.
SCALE — SHEET 12 OF 15 DIST.

DEC FORM NO. ORD 138

"THIS DRAWING AND SPECIFICATIONS, HEREIN, ARE THE PROPERTY OF DIGITAL EQUIPMENT CORPORATION AND SHALL NOT BE REPRODUCED OR COPIED OR USED IN WHOLE OR IN PART AS THE BASIS FOR THE MANUFACTURE OR SALE OF ITEMS WITHOUT WRITTEN PERMISSION.
COPYRIGHT © 1975 DIGITAL EQUIPMENT CORPORATION"

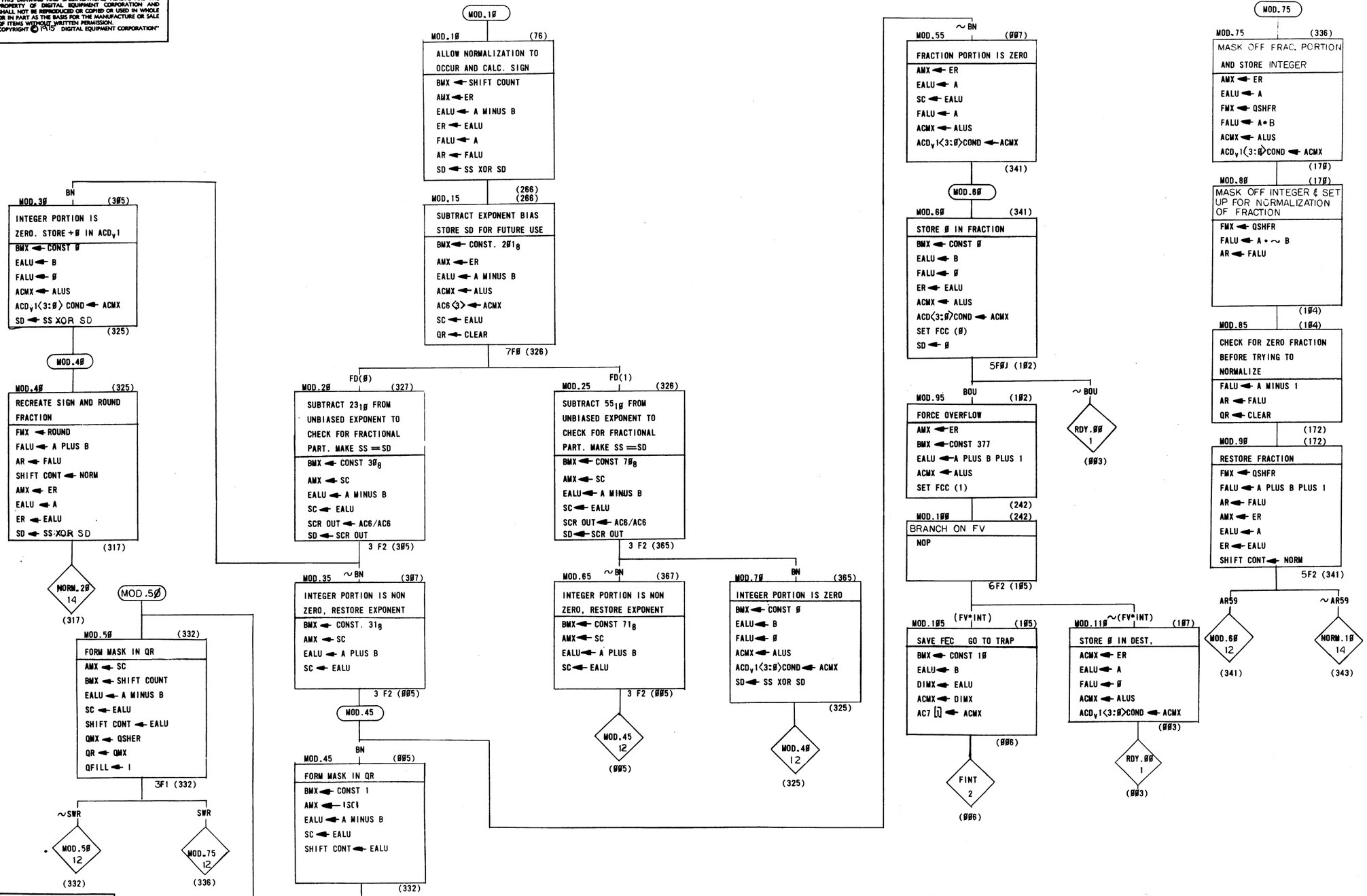

REVISIONS		
CHK	CHANGE NO.	REV.

TITLE	SIZE	CODE	NUMBER	REV.
FLOW DIAGRAM FPII-C (FLOWS 12)	D	FD	FPII-C-1	
SCALE — SHEET 13 OF 15	DIST.			

DEC FORM NO. DRD 136

"THIS DRAWING AND SPECIFICATIONS, HEREIN, ARE THE PROPERTY OF DIGITAL EQUIPMENT CORPORATION AND SHALL NOT BE REPRODUCED OR COPIED OR USED IN WHOLE OR IN PART AS THE BASIS FOR THE MANUFACTURE OR SALE OF ITEMS WITHOUT WRITTEN PERMISSION. COPYRIGHT © 1975 DIGITAL EQUIPMENT CORPORATION"

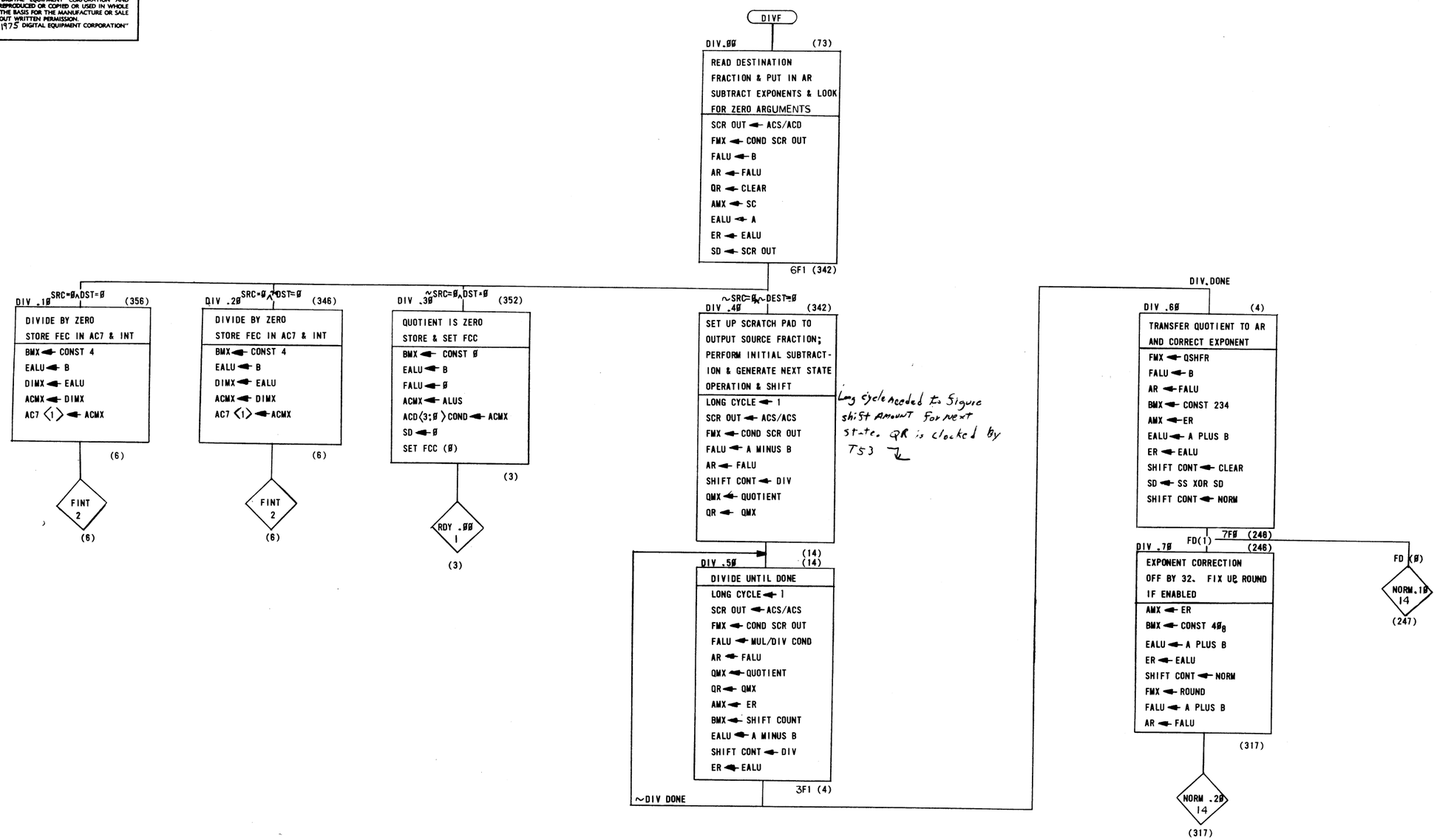

REVISIONS		
CHK	CHANGE NO.	REV.

DEC FORM NO. DRD 138

TITLE	SIZE	CODE	NUMBER	REV.
FLOW DIAGRAM FPII-C (FLOWS 13)	D	FD	FPII-C-1	
SCALE —//	SHEET 14 OF 15	DIST.		

"THIS DRAWING AND SPECIFICATIONS, HEREIN, ARE THE PROPERTY OF DIGITAL EQUIPMENT CORPORATION AND SHALL NOT BE REPRODUCED OR COPIED OR USED IN WHOLE OR IN PART AS THE BASIS FOR THE MANUFACTURE OR SALE OF ITEMS WITHOUT WRITTEN PERMISSION.
COPYRIGHT © 1975 DIGITAL EQUIPMENT CORPORATION"

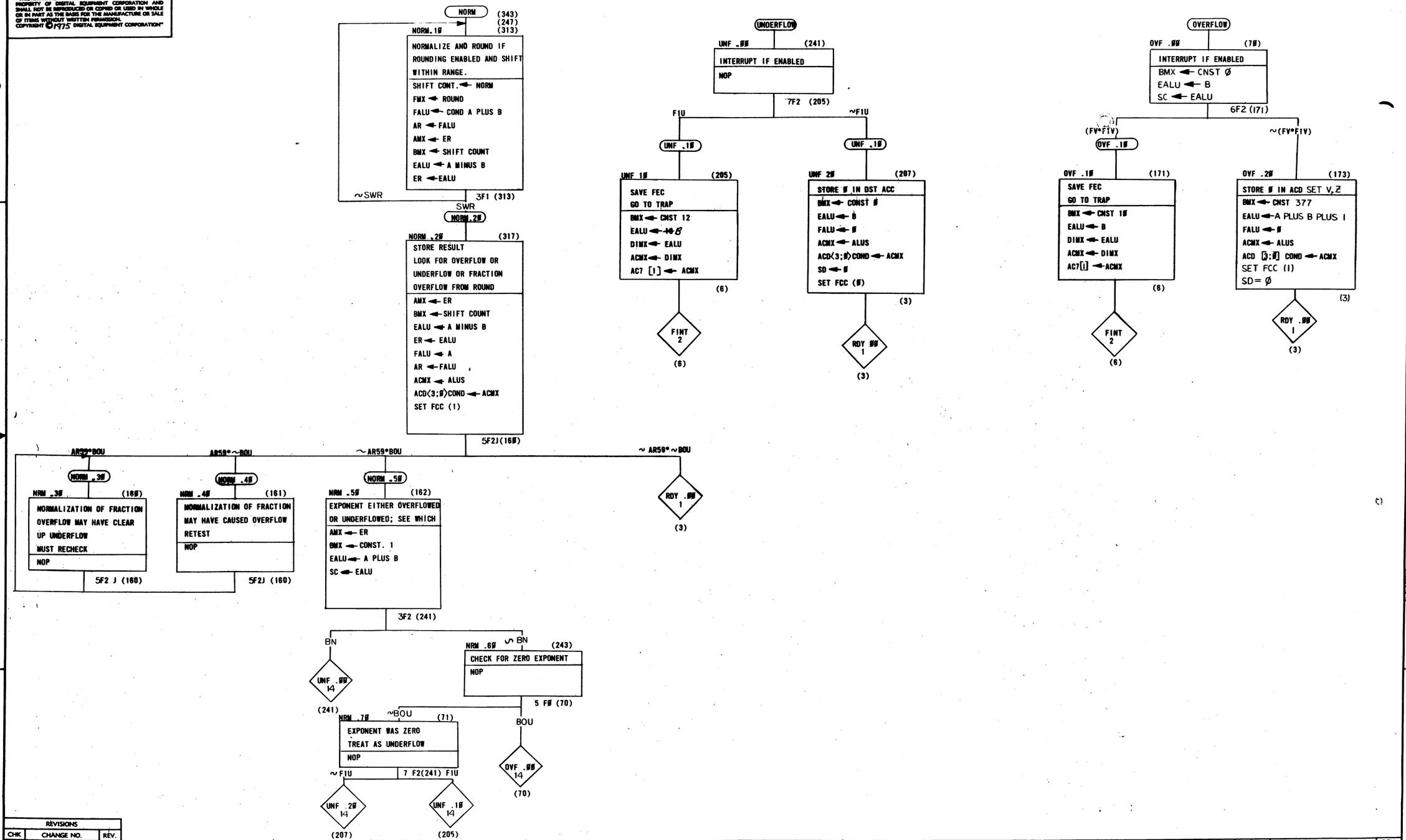

REVISIONS		
CHK	CHANGE NO.	REV.

TITLE	FLOW DIAGRAM FPII-C (FLOWS 14)	SIZE	CODE	NUMBER	REV.
SCALE —//—	SHEET 15 OF 15	D	FD	FPII-C-1	
		DIST.			

DEC FORM NO. DRD 130

"THIS DRAWING AND SPECIFICATIONS, HEREIN, ARE THE PROPERTY OF DIGITAL EQUIPMENT CORPORATION AND SHALL NOT BE REPRODUCED OR COPIED OR USED IN WHOLE OR IN PART AS THE BASIS FOR THE MANUFACTURE OR SALE OF ITEMS WITHOUT WRITTEN PERMISSION.
COPYRIGHT © 1975 DIGITAL EQUIPMENT CORPORATION"

NOTES:

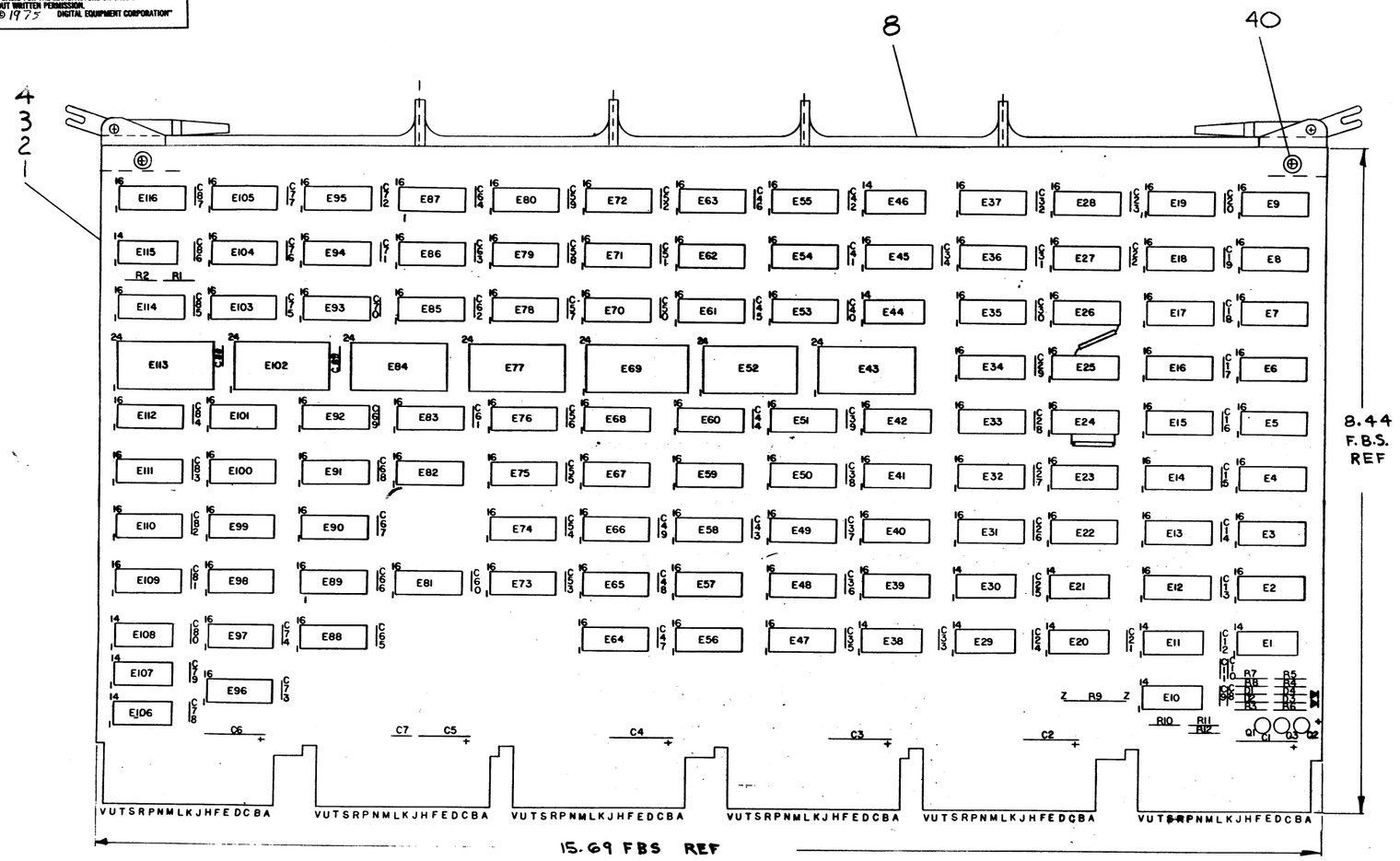

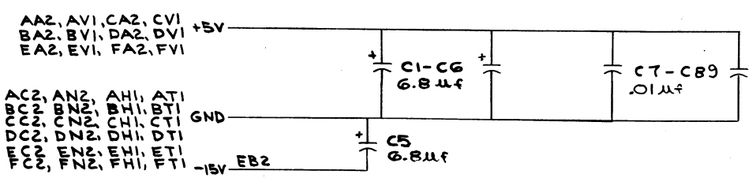

IC 74S182	8	16
IC 74S85	8	16
IC 74S175	8	16
IC 74157	8	16
IC 74174	8	16
IC 74S174	8	16
IC 74S158	8	16
IC 74S157	8	16
IC 74S153	8	16
IC 74S181	12	24
IC TYPE	GND	+5V

GND AND 5V ARE USUALLY PIN 7 AND 14 RESPECTIVELY EXCEPTIONS ARE STATED ABOVE

IC PIN LOCATIONS

QTY	REF. DESIGNATION	DESCRIPTION	PART NO.	ITEM NO.
REF		X-Y COORDINATE HOLE LOCATION	K-CO-M8126-Ø-4	1
REF		ASSY/DRILLING HOLE LAYOUT	D-AH-M8126-Ø-5	2
REF		MODULE ECO HISTORY	B-MH-M8126-Ø-6	3
1		ETCHED CIRCUIT BOARD	5011870	4
83	C7 THRU C89	CAPACITOR, .01uf	1001610-00	5
6	C1 THRU C6	CAPACITOR, 6.8uf	1005306	6
4	D1 THRU D4	DIODE, D652	1100113	7
1		HANDLE HEX MODULE	1210711-2	8
3	R1,R7,R11	RESISTOR, 330 OHM, 1/4W, 5%	1300295	9
1	R3	RESISTOR, 470 OHM, 1/4W, 5%	1300318	10
3	R2,R8,R12	RESISTOR, 680 OHM, 1/4W, 5%	1301424	11
1	R6	RESISTOR, 82 OHM, 1/4W, 5%	1301477	12
2	R4,R5	RESISTOR, 22 OHM, 1/4W, 5%	1301989	13
1	R9	RESISTOR, 300Ω 1W, 5%	1300292	14
1	R10	RESISTOR 100Ω 1/4W 5%	1300224	15
2	Q1,Q2	TRANSISTOR, 3009B	1503100	16
1	Q3	TRANSISTOR, 4258	1505321	17
1	E115	I.C. DEC 8242	1909712	18
7	E43,E52,E69,E77,E84,E102, E113	I.C. DEC 74S181	1910531	19
3	E1,E11,E30	I.C. DEC 74SØØ	1910532	20
4	E29,E38,E44,E46	I.C. DEC 74SØ4	1910534	21
2	E20,E18	I.C. DEC 74S1Ø	1910536	22
3	E21,E106,E107	I.C. DEC 74S11	1910537	23
1	E10	I.C. DEC 74S74	1910544	24
5	E13,E16,E112,E14,E15	I.C. DEC 74S153	1910547	25
17	E2,E7,E17,E50,E51,E59,E60, E67,E68,E75,E76,E82,E83, E91,E92,E100,E101	I.C. DEC 74S157	1910548	26
7	E31 THRU E37	I.C. DEC 74S158	1910549	27
12	E3,E4,E47,E56,E61,E64,E78, E85,E88,E97,E103,E114	I.C. DEC 74S174	1910550	28
1½"		#30 AWG. JUMPERS	91ØS74Ø-55	29
3	E40,E41,E111	I.C. DEC 74157	1910655	30
3	E5,E6,E53	I.C. DEC 74S175	1910957	31
1	E108	I.C. DEC 74S51	1911712-ØØ-S	32
1	E12	I.C. DEC 74S85	1912089-ØØ-S	33
7	E22 THRU E28	I.C. DEC 74S189	1912661	34
2	E42,E45	I.C. DEC 74148	1912796	35
2	E70,E93	I.C. DEC 74S182	1912097	36
30	E48,E49,E54,E55,E57,E58, E62,E63,E65,E66,E71 THRU E74,E79 THRU E81,E86,E87, E89,E90,E94,E95,E98,E99, E104,E105,E109,E110,E116	I.C. DEC 25S1Ø	1912693	37
1	E39	ROM	23DØ9A2	38
1	E96	ROM	23DØ6A2	39
12		EYELET	9006732	40

PARTS LIST

FIRST USED ON OPTION MODEL	ETCH BOARD REV.
FPII-C	C

DEC NO.	EIA NO.	DEC NO.	EIA NO.

SEMICONDUCTOR CONVERSION CHART

REV.	CHANGE NO.	CHK
B	M8126-00001	T. NORTHRUP 12-5-75
C	M8126-00002	T. NORTHRUP 2 JAN 76

REVISIONS

DRN. DATE
CHKD. DATE 11-25-75
ENG. DATE 11/25/75
PROJ. ENG. DATE 11/25/75
PROD. DATE 12/2/75
NEXT HIGHER ASSY B-DD-FPII C
SCALE
SHEET 1 OF 13

digital

TITLE FRACTION PROC HIGH ORDER

SIZE D CODE CS NUMBER M8126-Ø-1 REV. C

DIST.

DEC FORM NO. DRD 135.B

"THIS DRAWING AND SPECIFICATIONS, HEREIN, ARE THE PROPERTY OF DIGITAL EQUIPMENT CORPORATION AND SHALL NOT BE REPRODUCED OR COPIED OR USED IN WHOLE OR IN PART AS THE BASIS FOR THE MANUFACTURE OR SALE OF ITEMS WITHOUT WRITTEN PERMISSION.
COPYRIGHT © 1975 DIGITAL EQUIPMENT CORPORATION"

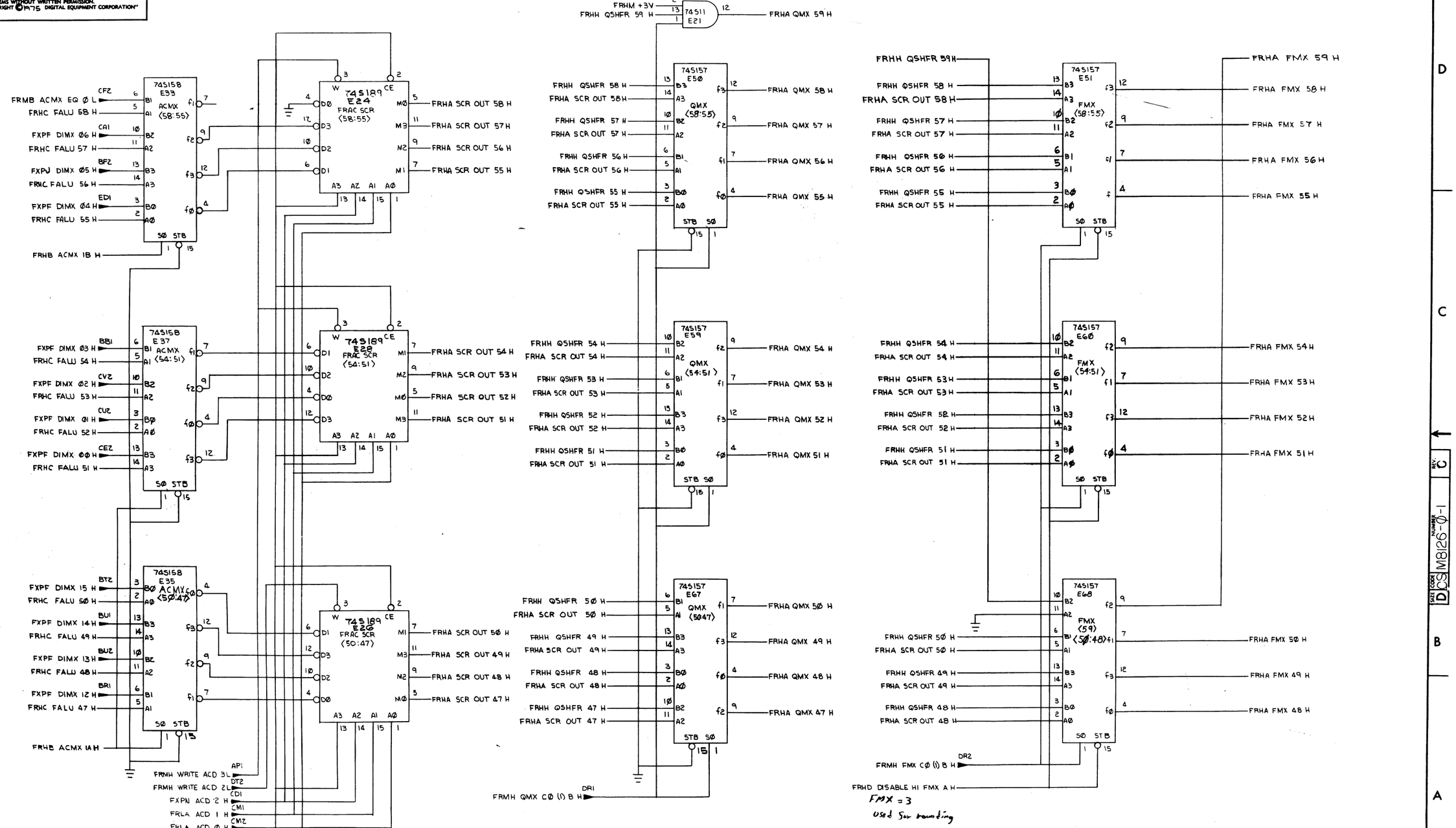

(SLOT Ø2)

REVISIONS		
CHK	CHANGE NO.	REV.

TITLE	SIZE	CODE	NUMBER	REV.
FRACTION PROC HIGH ORDER (FRHA)	D	CS	M8126-Ø-1	C
SCALE — / —	SHEET 2 OF 13	DIST.		

DEC FORM NO. DRD 138

"THIS DRAWING AND SPECIFICATIONS, HEREIN, ARE THE PROPERTY OF DIGITAL EQUIPMENT CORPORATION AND SHALL NOT BE REPRODUCED OR COPIED OR USED IN WHOLE OR IN PART AS THE BASIS FOR THE MANUFACTURE OR SALE OF ITEMS WITHOUT WRITTEN PERMISSION. COPYRIGHT © DIGITAL EQUIPMENT CORPORATION"

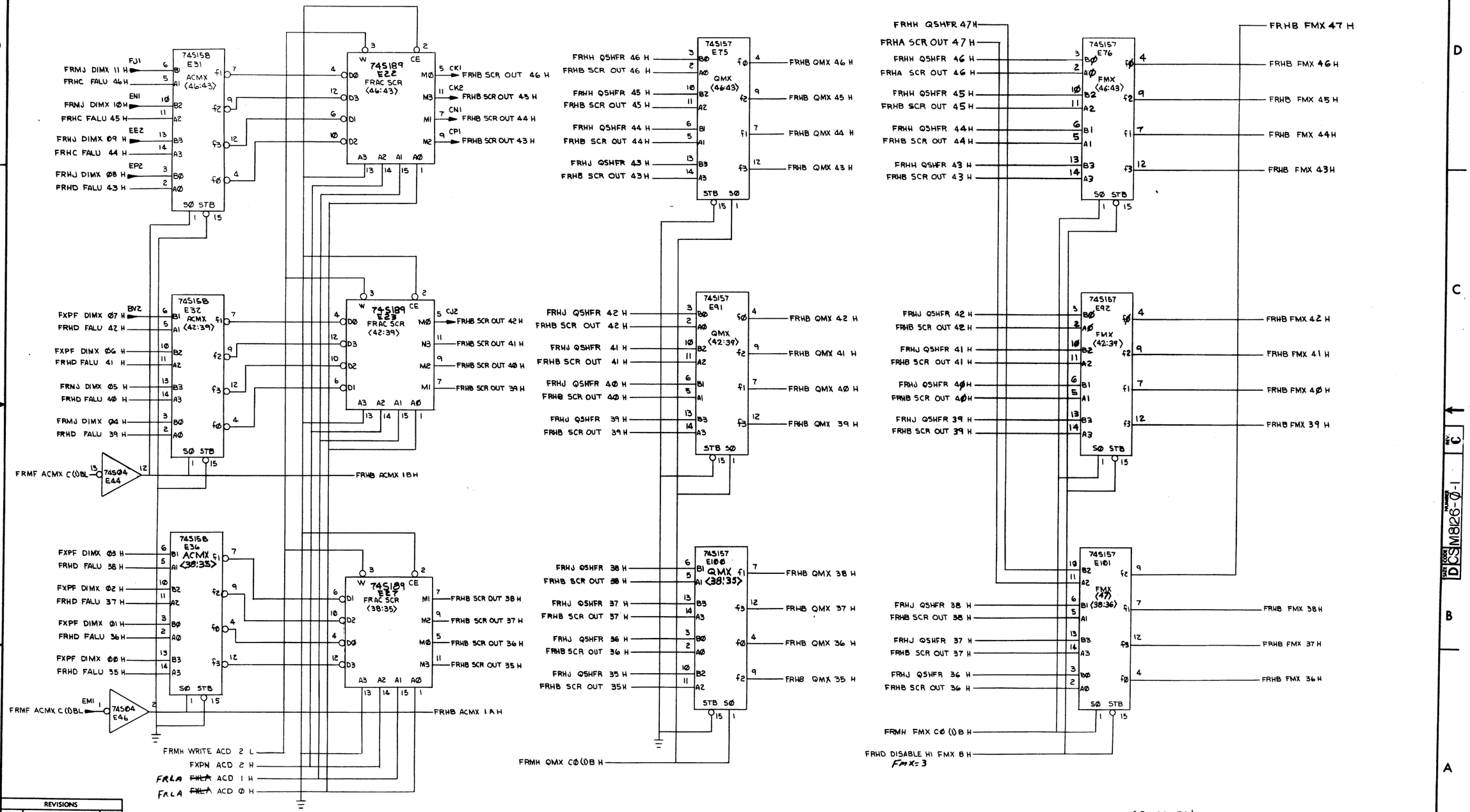

REVISIONS		
CHK	CHANGE NO.	REV.

(SLOT 02)

TITLE	SIZE	CODE	NUMBER	REV.
FRACTION PROC. HIGH ORDER (FRHB)	D	CS	M8126-0-1	C
SCALE —	SHEET 3 OF 13	DIST.		

DEC FORM NO. DRD 138

"THIS DRAWING AND SPECIFICATIONS, HEREIN, ARE THE PROPERTY OF DIGITAL EQUIPMENT CORPORATION AND SHALL NOT BE REPRODUCED OR COPIED OR USED IN WHOLE OR IN PART AS THE BASIS FOR THE MANUFACTURE OR SALE OF ITEMS WITHOUT WRITTEN PERMISSION.
COPYRIGHT © 1975 DIGITAL EQUIPMENT CORPORATION"

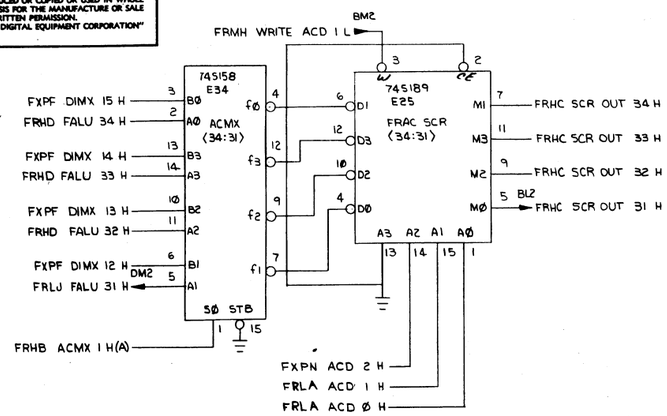

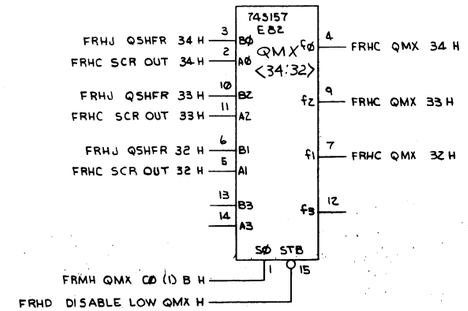

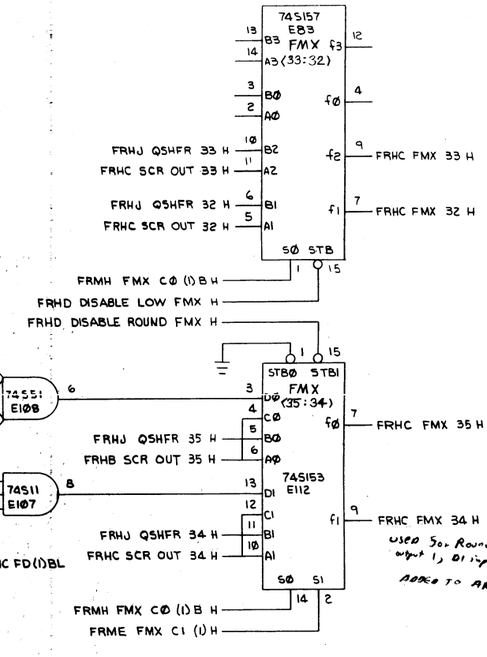

FMXC1	FMXCØ	FMX FUNCTION
Ø	Ø	FMX <59:ØØ> ← SCR OUT <59:ØØ>
Ø	1	FMX <59:ØØ> ← QSHFR <59:ØØ>
1	Ø	FMX <59:35> ← SCR OUT <59:35>; IF FD(1) FMX<34:00> ← SCR OUT <34:ØØ> ELSE FMX <34:ØØ> ← Ø
1	1	FMX <59:36> ← Ø; FMX <33:20> <18:Ø> ← Ø; FMX <1:Ø> ← Ø; FMX <34> ← FT (Ø), FD (Ø) ∧ INTEGER INC; FMX <Ø2> ← FT (Ø) ∧ FD (Ø); FMX <35> ← INTEGER INCAIL (Ø) FMX <19> ← INTEGER INCAIL (1)

QMXC1	QMXCØ	QMX FUNCTION
Ø	Ø	QMX (59:ØØ) ← SCR OUT (59:ØØ)
Ø	1	QMX (59:ØØ) ← QSHFR (59:ØØ)
1	Ø	QMX (59:35) ← SCROUT (59:35): IF FD(1) QMX (34:ØØ) ← SCROUT (34:ØØ) ELSE QMX (34:ØØ) ← Ø
1	1	QMX (59:ØØ) ← QSHFR (59:ØØ) IF FD(Ø) QSHFR (31:24) ← QUOT

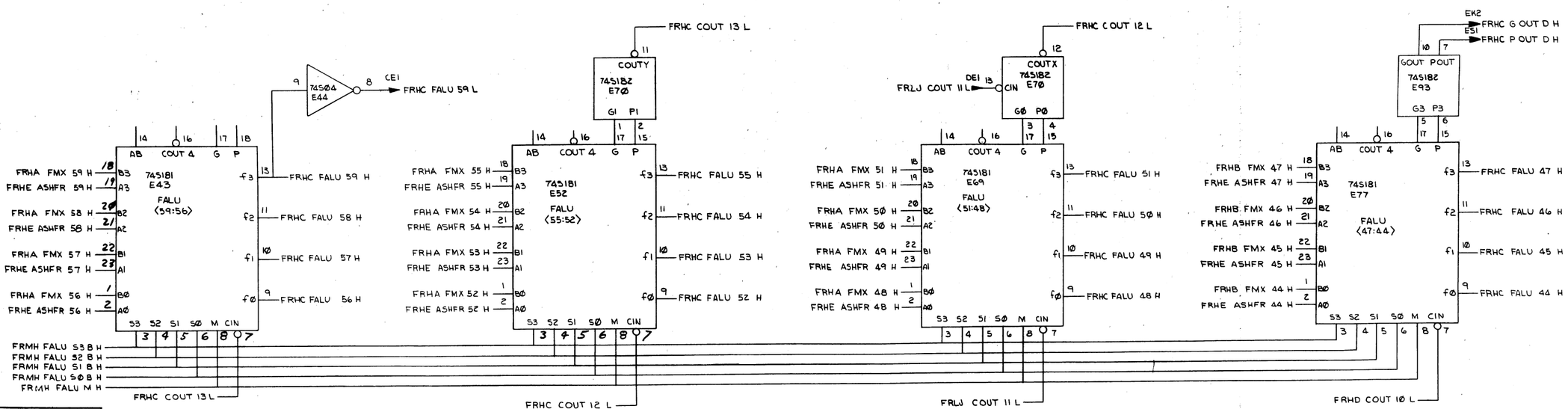

REVISIONS		
CHK	CHANGE NO.	REV.

(SLOT Ø2)

TITLE FRACTION PROC HIGH ORDER (FRHC)

SIZE D CODE CS NUMBER M8126-Ø-1 REV. C

SCALE — SHEET 4 OF 13 DIST.

DEC FORM NO. ORD 138

"THIS DRAWING AND SPECIFICATIONS, HEREIN, ARE THE PROPERTY OF DIGITAL EQUIPMENT CORPORATION AND SHALL NOT BE REPRODUCED OR COPIED OR USED IN WHOLE OR IN PART AS THE BASIS FOR THE MANUFACTURE OR SALE OF ITEMS WITHOUT WRITTEN PERMISSION. COPYRIGHT © 1975 DIGITAL EQUIPMENT CORPORATION"

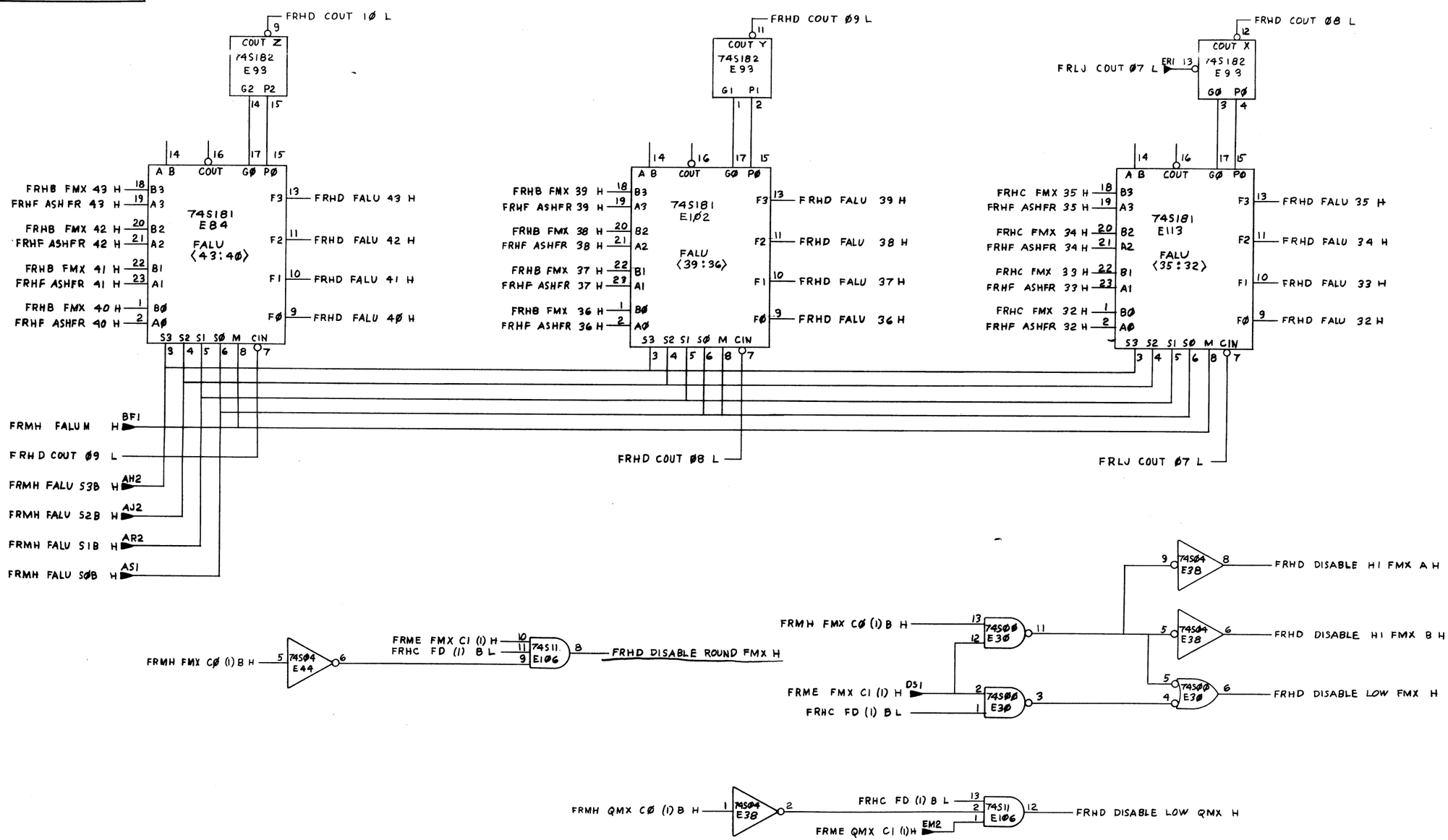

REVISIONS		
CHK	CHANGE NO.	REV.

(SLOT Ø2)

TITLE FRACTION PROC. HIGH ORDER (FRHD)

SIZE D CODE CS NUMBER M8126-Ø-1 REV. C

SCALE — SHEET 5 OF 13 DIST.

DEC FORM NO. DRD 138

"THIS DRAWING AND SPECIFICATIONS, HEREIN, ARE THE PROPERTY OF DIGITAL EQUIPMENT CORPORATION AND SHALL NOT BE REPRODUCED OR COPIED OR USED IN WHOLE OR IN PART AS THE BASIS FOR THE MANUFACTURE OR SALE OF ITEMS WITHOUT WRITTEN PERMISSION. COPYRIGHT © 1759 DIGITAL EQUIPMENT CORPORATION"

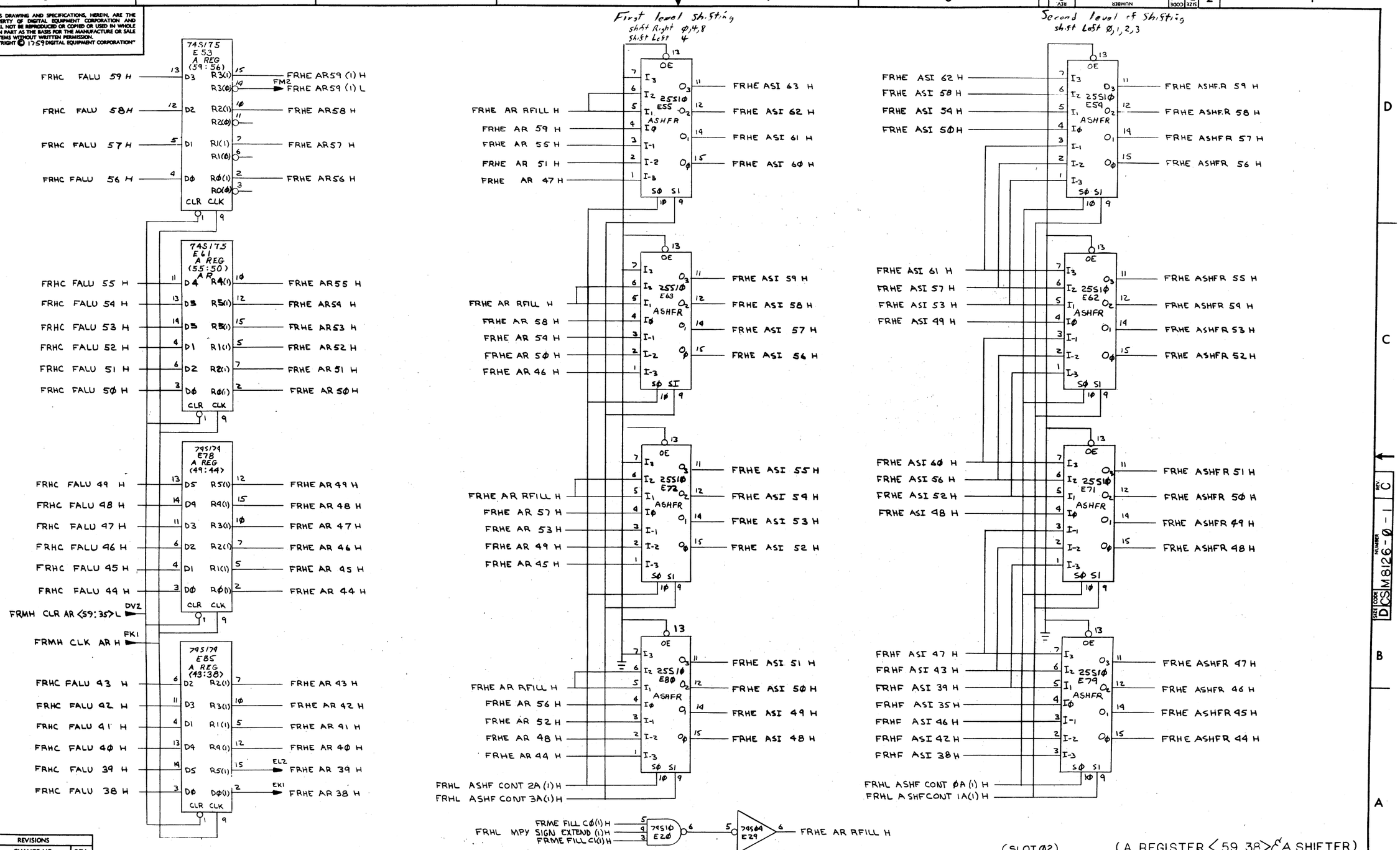

REVISIONS		
CHK	CHANGE NO.	REV.

TITLE	SIZE	CODE	NUMBER	REV.
FRACTION PROC HIGH ORDER (FRHE)	D	DCS	M8126-Ø-1	C
SCALE —	SHEET 6 OF 13	DIST.		

DEC FORM NO. DRD 138

"THIS DRAWING AND SPECIFICATIONS, HEREIN, ARE THE PROPERTY OF DIGITAL EQUIPMENT CORPORATION AND SHALL NOT BE REPRODUCED OR COPIED OR USED IN WHOLE OR IN PART AS THE BASIS FOR THE MANUFACTURE OR SALE OF ITEMS WITHOUT WRITTEN PERMISSION.
COPYRIGHT © 1971 DIGITAL EQUIPMENT CORPORATION"

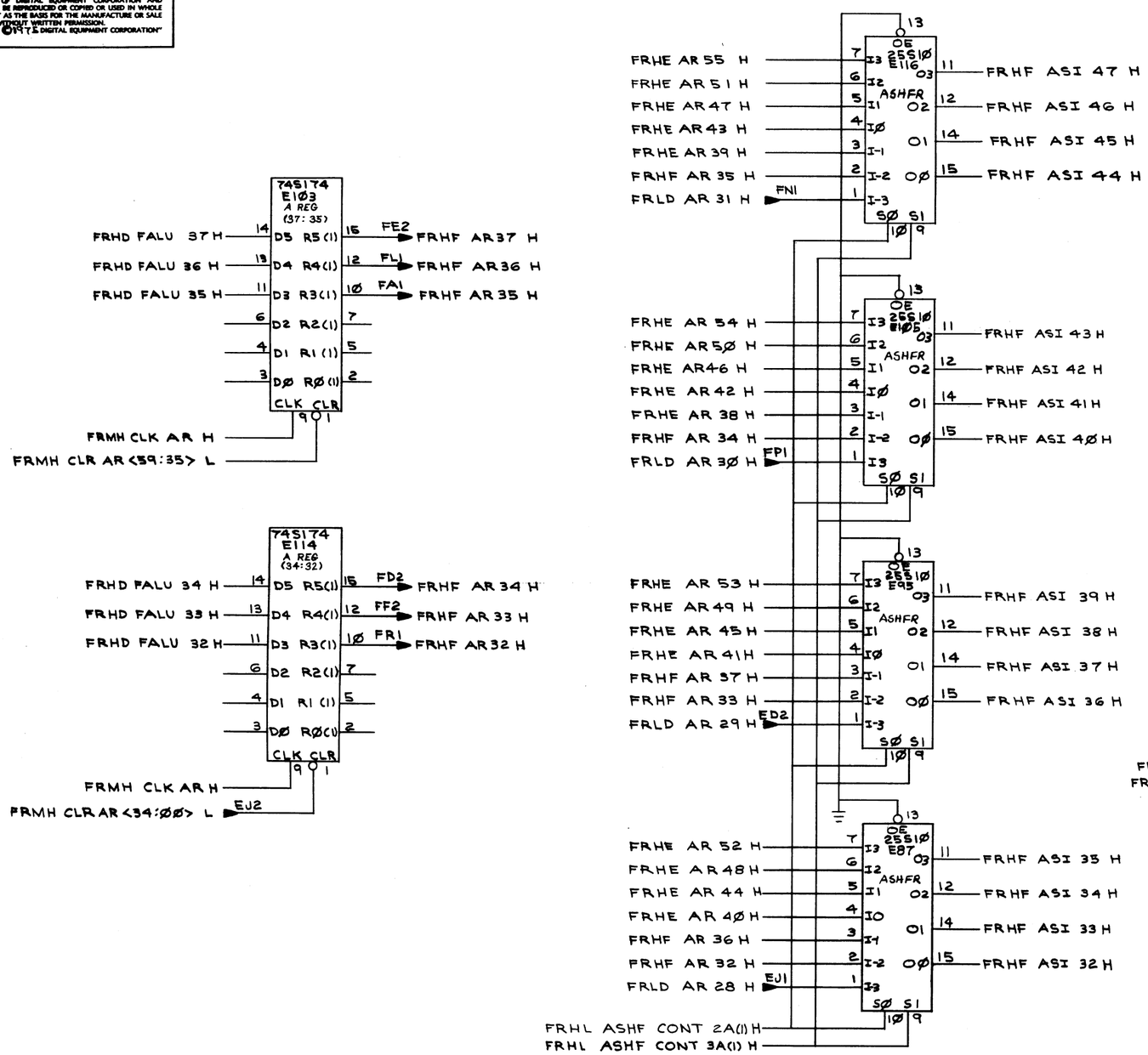

TRUTH TABLE FOR DEC 25S10

OE	S1	S0	0_0	0_1	0_2	0_3
0	0	0	I_0	I_1	I_2	I_3
0	0	1	I_{-1}	I_0	I_1	I_2
0	1	0	I_{-2}	I_{-1}	I_0	I_1
0	1	1	I_{-3}	I_{-2}	I_{-1}	I_0
1	X	X	Z	Z	Z	Z

NOTES: X = DON'T CARE
Z = OUTPUT "OFF" i.e. IN HIGH IMPEDANCE STATE

REVISIONS		
CHK	CHANGE NO.	REV.

(SLOT 02)

TITLE	SIZE	CODE	NUMBER	REV.
FRACTION PROC. HIGH ORDER (FRHF)	D	CS	M8126-0-1	C
SCALE — / —	SHEET 7 OF 13	DIST.		

DEC FORM NO. DRD 138

"THIS DRAWING AND SPECIFICATIONS, HEREIN, ARE THE PROPERTY OF DIGITAL EQUIPMENT CORPORATION AND SHALL NOT BE REPRODUCED OR COPIED OR USED IN WHOLE OR IN PART AS THE BASIS FOR THE MANUFACTURE OR SALE OF ITEMS WITHOUT WRITTEN PERMISSION. COPYRIGHT © 1975 DIGITAL EQUIPMENT CORPORATION"

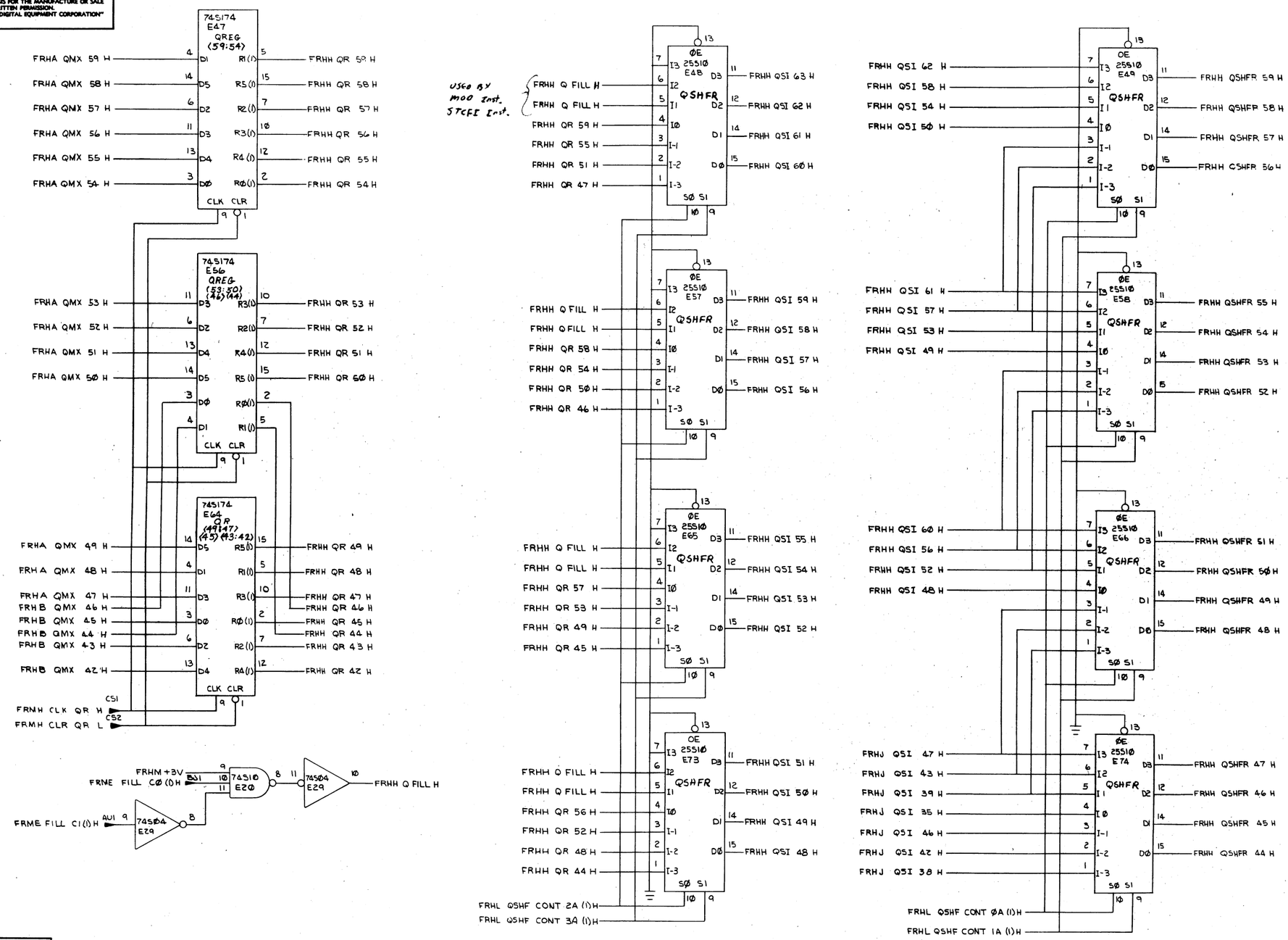

REVISIONS		
CHK	CHANGE NO.	REV.

(SLOT Ø2)

TITLE FRACTION PROC HIGH ORDER (FRHH)

SCALE — SHEET 8 OF 13

SIZE	CODE	NUMBER	REV.
D	CS	M8126-Ø-1	C

DIST.

DEC FORM NO. DRD 138

"THIS DRAWING AND SPECIFICATIONS, HEREIN, ARE THE PROPERTY OF DIGITAL EQUIPMENT CORPORATION AND SHALL NOT BE REPRODUCED OR COPIED OR USED IN WHOLE OR IN PART AS THE BASIS FOR THE MANUFACTURE OR SALE OF ITEMS WITHOUT WRITTEN PERMISSION.
COPYRIGHT ©1975 DIGITAL EQUIPMENT CORPORATION"

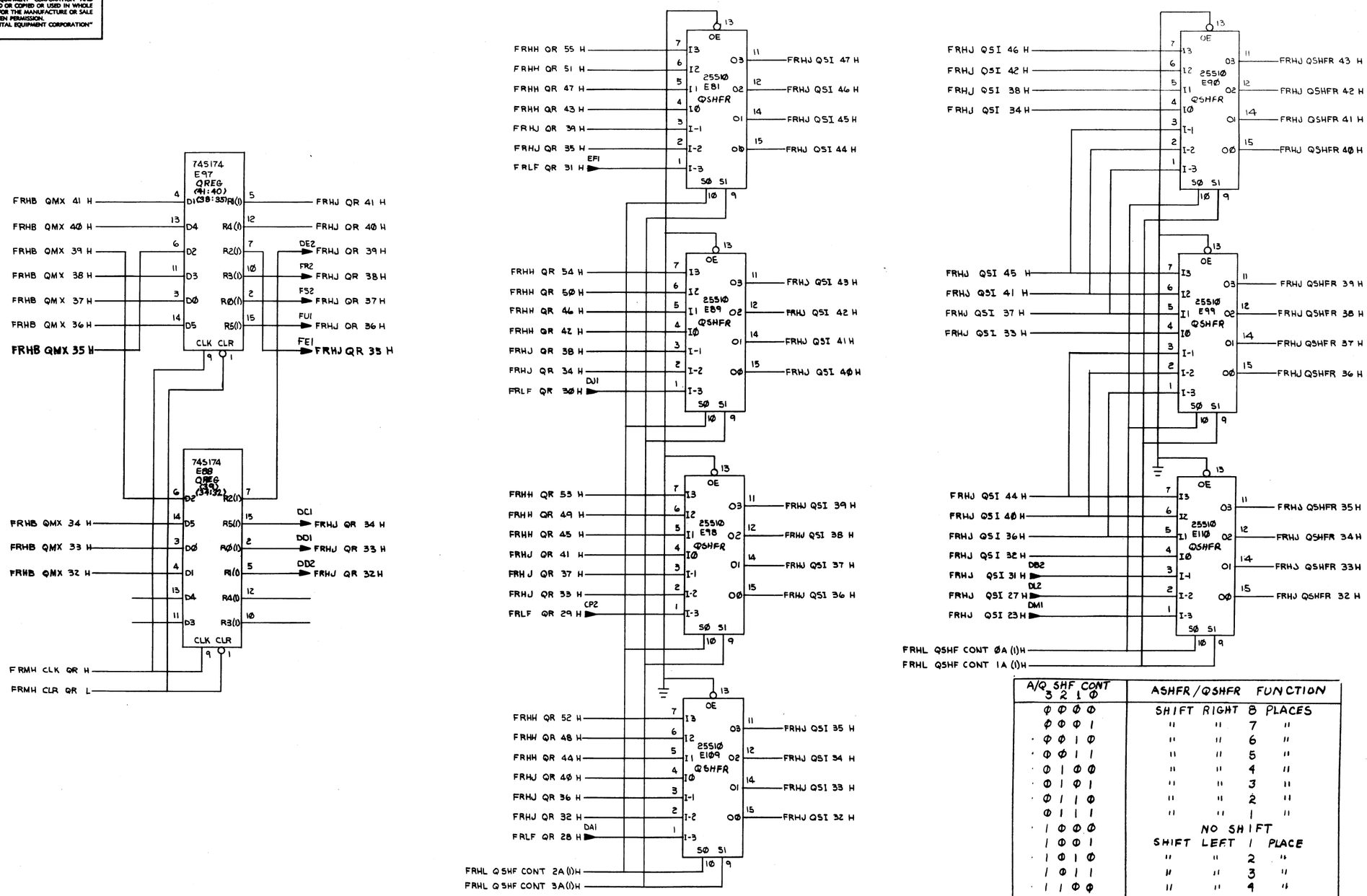

A/Q SHF CONT 3 2 1 0	ASHFR/QSHFR FUNCTION
0 0 0 0	SHIFT RIGHT 8 PLACES
0 0 0 1	" " 7 "
0 0 1 0	" " 6 "
0 0 1 1	" " 5 "
0 1 0 0	" " 4 "
0 1 0 1	" " 3 "
0 1 1 0	" " 2 "
0 1 1 1	" " 1 "
1 0 0 0	NO SHIFT
1 0 0 1	SHIFT LEFT 1 PLACE
1 0 1 0	" " 2 "
1 0 1 1	" " 3 "
1 1 0 0	" " 4 "
1 1 0 1	" " 5 "
1 1 1 0	" " 6 "
1 1 1 1	" " 7 "

(SLOT 02)

REVISIONS		
CHK	CHANGE NO.	REV.

TITLE FRACTION (FRHJ)
PROC. HIGH ORDER

SIZE D | CODE CS | NUMBER M8126-0-1 | REV. C

SCALE — | SHEET 9 OF 12 | DIST.

DEC FORM NO. DRD 138

"THIS DRAWING AND SPECIFICATIONS, HEREIN, ARE THE PROPERTY OF DIGITAL EQUIPMENT CORPORATION AND SHALL NOT BE REPRODUCED OR COPIED OR USED IN WHOLE OR IN PART AS THE BASIS FOR THE MANUFACTURE OR SALE OF ITEMS WITHOUT WRITTEN PERMISSION.
COPYRIGHT © 1975 DIGITAL EQUIPMENT CORPORATION"

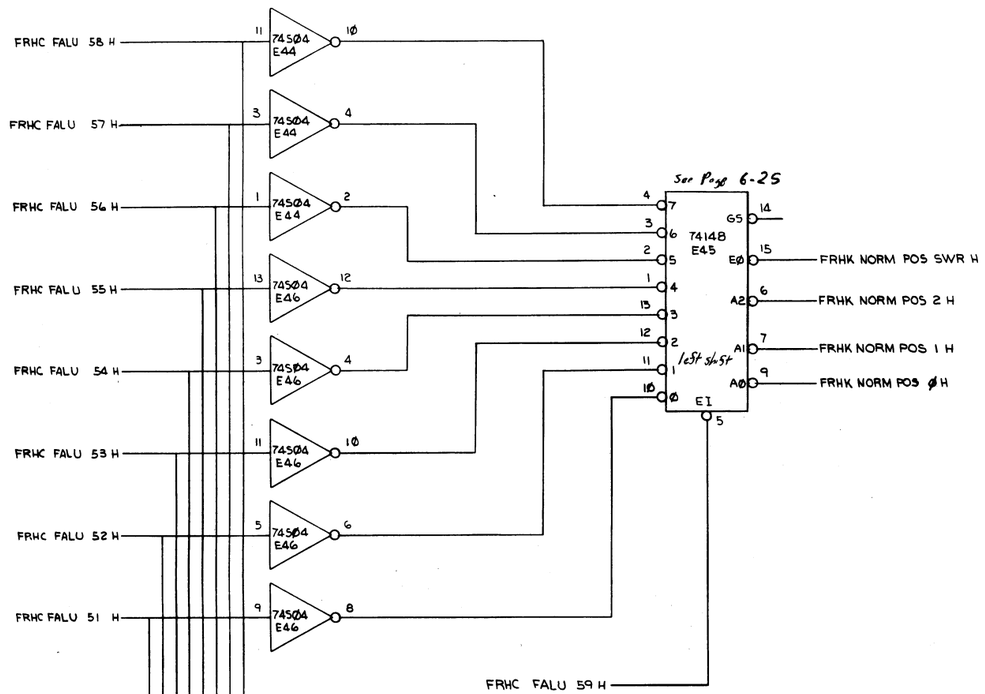

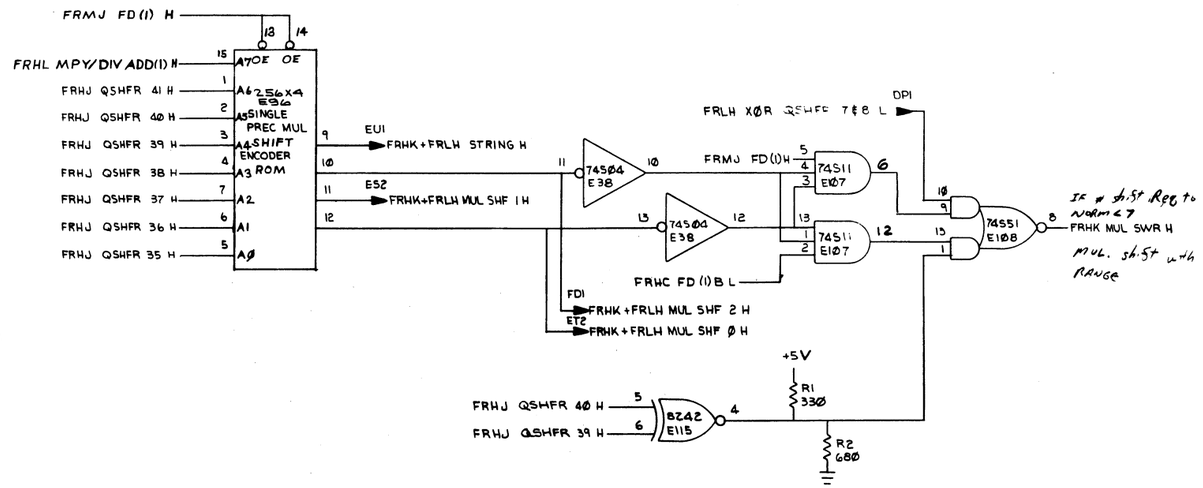

Q REG NORM SHIFT COUNT LOOKUP ROM

ADDRESS	CONTENTS
ØØØ → ØØ1	1Ø
ØØ2 → ØØ3	Ø7
ØØ4 → ØØ7	Ø6
Ø1Ø → Ø17	Ø5
Ø2Ø → Ø37	Ø4
Ø4Ø → Ø77	Ø3
1ØØ → 177	Ø2
2ØØ → 377	Ø1

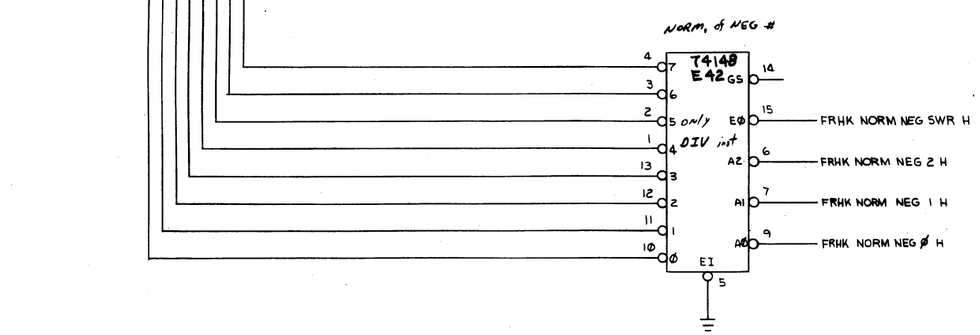

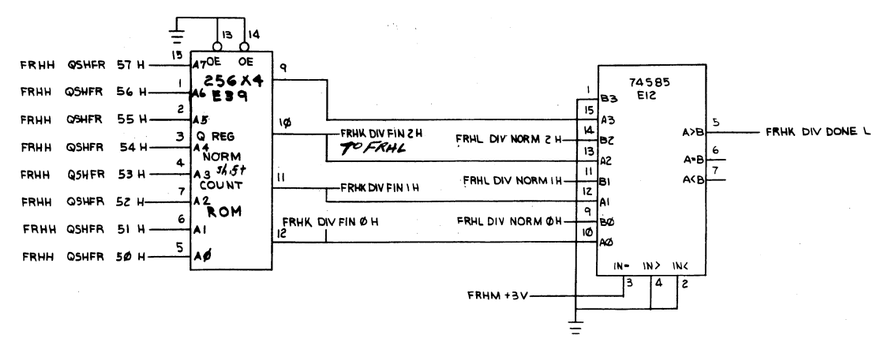

REVISIONS		
CHK	CHANGE NO.	REV.

(SLOT Ø2)

TITLE (FRHK) FRACTION PROC HIGH ORDER

SIZE D CODE CS NUMBER M8126-Ø REV. C

SCALE # SHEET 10 OF 13 DIST.

DEC FORM NO. DRD 138

"THIS DRAWING AND SPECIFICATIONS, HEREIN, ARE THE PROPERTY OF DIGITAL EQUIPMENT CORPORATION AND SHALL NOT BE REPRODUCED OR COPIED OR USED IN WHOLE OR IN PART AS THE BASIS FOR THE MANUFACTURE OR SALE OF ITEMS WITHOUT WRITTEN PERMISSION. COPYRIGHT © 1975 DIGITAL EQUIPMENT CORPORATION"

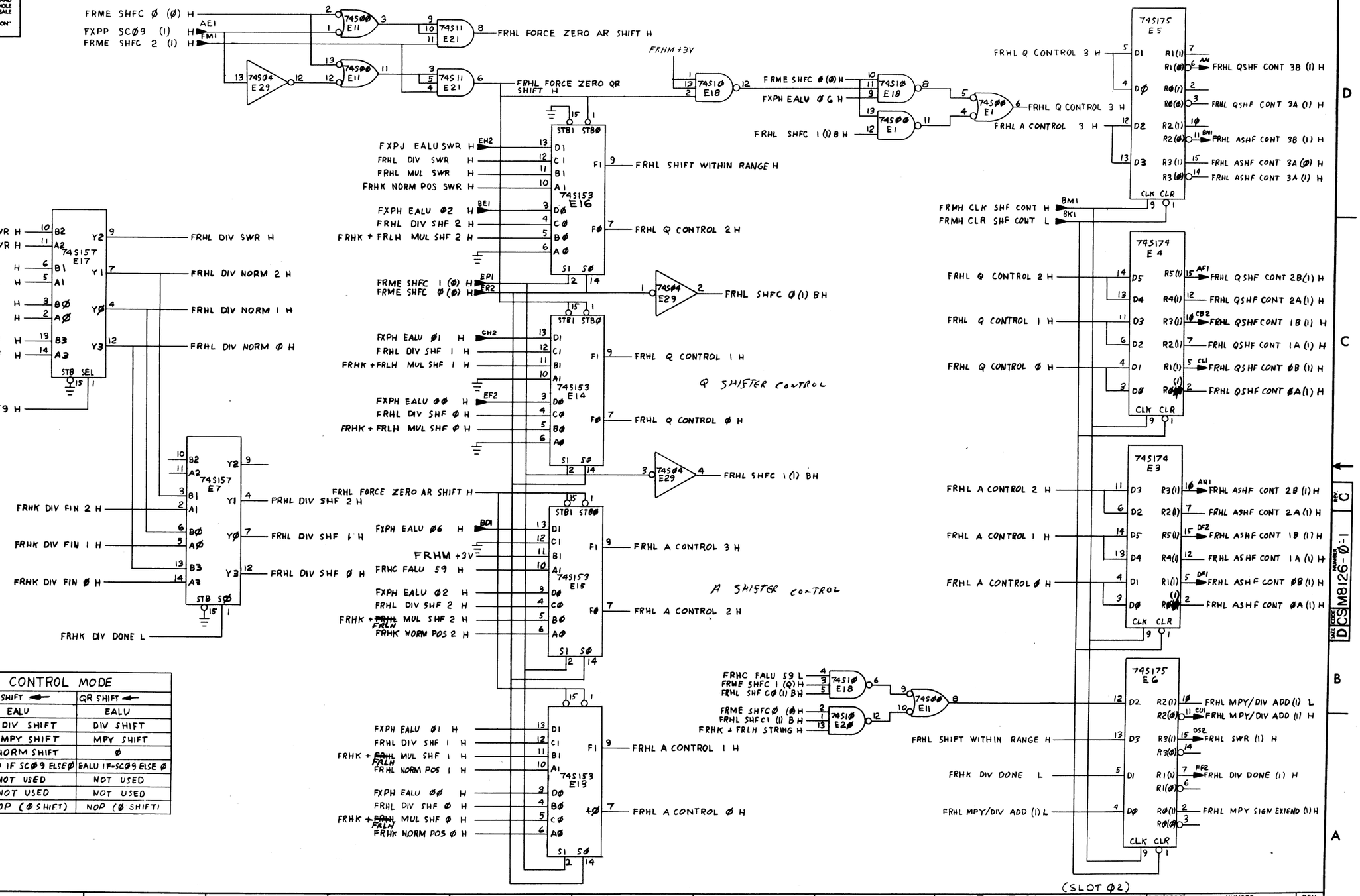

SHIFT CONTROL MODE				
SHFC2	SHFC1	SHFCØ	AR SHIFT ←	QR SHIFT ←
Ø	Ø	Ø	EALU	EALU
Ø	Ø	1	DIV SHIFT	DIV SHIFT
Ø	1	Ø	MPY SHIFT	MPY SHIFT
Ø	1	1	NORM SHIFT	Ø
1	Ø	Ø	EALU IF SCØ9 ELSE Ø	EALU IF-SCØ9 ELSE Ø
1	Ø	1	NOT USED	NOT USED
1	1	Ø	NOT USED	NOT USED
1	1	1	NOP (Ø SHIFT)	NOP (Ø SHIFT)

REVISIONS		
CHK	CHANGE NO.	REV.

TITLE FRACTION (FRHL) PROC. HIGH ORDER

SCALE — SHEET 11 OF 13 — SIZE D — CODE CS — NUMBER M8126-Ø-1 — REV. C — DIST.

DEC FORM NO. DRD 138

"THIS DRAWING AND SPECIFICATIONS, HEREIN, ARE THE PROPERTY OF DIGITAL EQUIPMENT CORPORATION AND SHALL NOT BE REPRODUCED OR COPIED OR USED IN WHOLE OR IN PART AS THE BASIS FOR THE MANUFACTURE OR SALE OF ITEMS WITHOUT WRITTEN PERMISSION.
COPYRIGHT © 1975 DIGITAL EQUIPMENT CORPORATION"

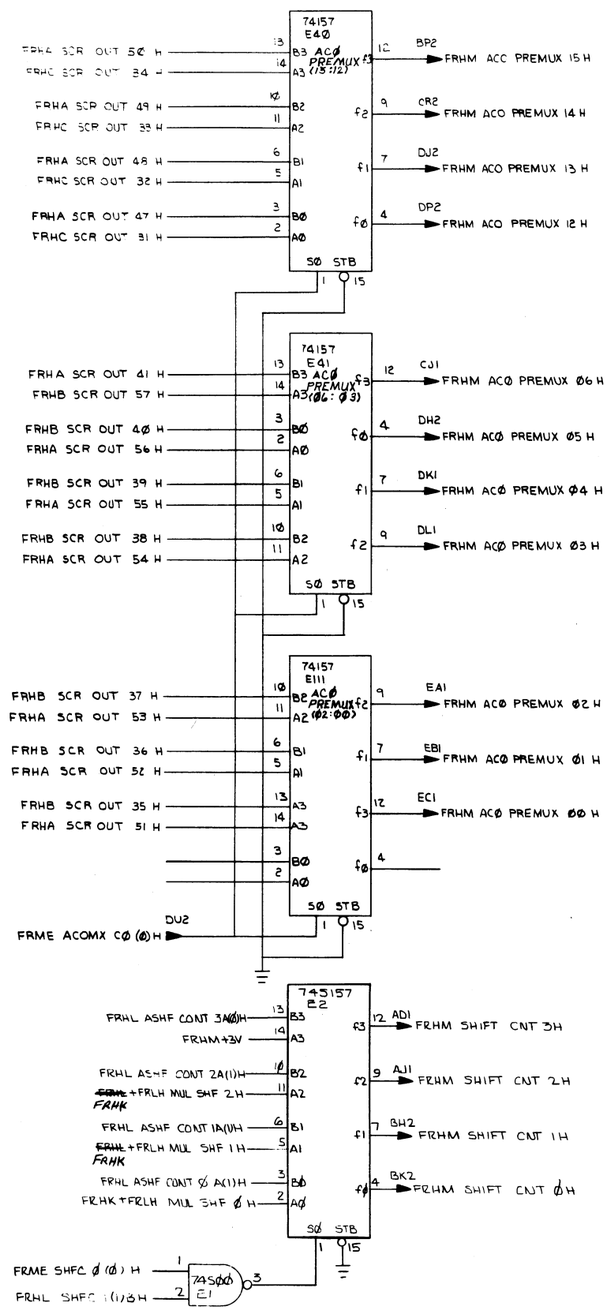

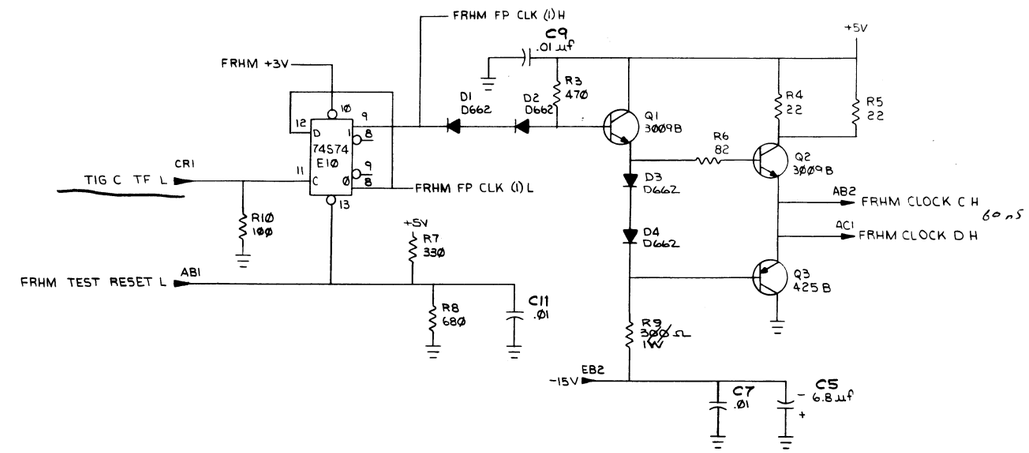

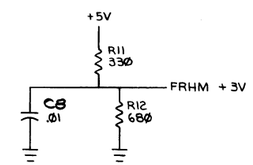

FRMC FP EXEC TRAP L — EE1 → AR1

TMCB FP ACKN L — BD2 → BP1

SHIFT COUNT MUX FUNCTION

SHFC1	SHFC0	
0	0	FRHM SHIFT CNT (3:0) ← FRHL ASHF CONT (3:0)
0	1	" " " " " " " "
1	0	FRHM SHIFT CNT (3:0) ← FRHK+FRLH MUL SHF (3:0)
1	1	FRHM SHIFT CNT (3:0) ← FRHL ASHF CONT (3:0)

REVISIONS		
CHK	CHANGE NO.	REV.

(SLOT 02)

TITLE	SIZE	CODE	NUMBER	REV.
(FRHM) FRACTION PROC. HIGH ORDER	D	CS	M8126-0-1	C
SCALE —	SHEET 12 OF 13	DIST.		

DEC FORM NO. DRD 138

"THIS DRAWING AND SPECIFICATIONS, HEREIN, ARE THE PROPERTY OF DIGITAL EQUIPMENT CORPORATION AND SHALL NOT BE REPRODUCED OR COPIED OR USED IN WHOLE OR IN PART AS THE BASIS FOR THE MANUFACTURE OR SALE OF ITEMS WITHOUT WRITTEN PERMISSION.
COPYRIGHT © 1975 DIGITAL EQUIPMENT CORPORATION"

MULTIPLY CONTROL LOOKUP ROM

ADDRESS (OCTAL)	CONTENTS (OCTAL)	FUNCTION SHIFT BY	FUNCTION OPERATION
000	07	1	ADD
001	06	2	ADD
002	17	1	SUB
003	05	3	ADD
004	07	1	ADD
005	16	2	SUB
006	17	1	SUB
007	04	4	ADD
010	07	1	ADD
011	06	2	ADD
012	17	1	SUB
013	15	3	SUB
014	07	1	ADD
015	16	2	SUB
016	17	1	SUB
017	03	5	ADD
020	07	1	ADD
021	06	2	ADD
022	17	1	SUB
023	15	3	SUB
024	07	1	ADD
025	16	2	SUB
026	17	1	SUB
027	14	4	SUB
030	07	1	ADD
031	06	2	ADD
032	17	1	SUB
033	15	3	SUB
034	07	1	ADD
035	16	2	SUB
036	17	1	SUB
037	02	6	ADD
040	07	1	ADD
041	06	2	ADD
042	17	1	SUB
043	05	3	ADD
044	07	1	ADD
045	16	2	SUB
046	17	1	SUB
047	04	4	ADD
050	07	1	ADD
051	06	2	ADD
052	17	1	SUB
053	15	3	SUB
054	07	1	ADD
055	16	2	SUB
056	17	1	SUB
057	13	5	SUB
060	07	1	ADD
061	06	2	ADD
062	17	1	SUB
063	05	3	ADD
064	07	1	ADD
065	16	2	SUB
066	17	1	SUB
067	14	4	SUB
070	07	1	ADD
071	06	2	ADD
072	17	1	SUB
073	15	3	SUB
074	07	1	ADD
075	16	2	SUB
076	17	1	SUB
077	12	6	SUB

ADDRESS (OCTAL)	CONTENTS (OCTAL)	FUNCTION SHIFT BY	FUNCTION OPERATION
100	07	1	ADD
101	06	2	ADD
102	17	1	SUB
103	05	3	ADD
104	07	1	ADD
105	16	2	SUB
106	17	1	SUB
107	04	4	ADD
110	07	1	ADD
111	06	2	ADD
112	17	1	SUB
113	15	3	SUB
114	07	1	ADD
115	16	2	SUB
116	17	1	SUB
117	03	5	ADD
120	07	1	ADD
121	06	2	ADD
122	17	1	SUB
123	05	3	ADD
124	07	1	ADD
125	16	2	SUB
126	17	1	SUB
127	14	4	SUB
130	07	1	ADD
131	06	2	ADD
132	17	1	SUB
133	15	3	SUB
134	07	1	ADD
135	16	2	SUB
136	17	1	SUB
137	12	6	SUB
140	07	1	ADD
141	06	2	ADD
142	17	1	SUB
143	05	3	ADD
144	07	1	ADD
145	16	2	SUB
146	17	1	SUB
147	04	4	ADD
150	07	1	ADD
151	06	2	ADD
152	17	1	SUB
153	15	3	SUB
154	07	1	ADD
155	16	2	SUB
156	17	1	SUB
157	13	5	SUB
160	07	1	ADD
161	06	2	ADD
162	17	1	SUB
163	05	3	ADD
164	07	1	ADD
165	16	2	SUB
166	17	1	SUB
167	14	4	SUB
170	07	1	ADD
171	06	2	ADD
172	17	1	SUB
173	15	3	SUB
174	07	1	ADD
175	16	2	SUB
176	17	1	SUB
177	12	6	SUB

ADDRESS (OCTAL)	CONTENTS (OCTAL)	FUNCTION SHIFT BY	FUNCTION OPERATION
200	02	6	ADD
201	07	1	ADD
202	06	2	ADD
203	17	1	SUB
204	05	3	ADD
205	07	1	ADD
206	16	2	SUB
207	17	1	SUB
210	04	4	ADD
211	07	1	ADD
212	06	2	ADD
213	17	1	SUB
214	15	3	SUB
215	07	1	ADD
216	16	2	SUB
217	17	1	SUB
220	03	5	ADD
221	07	1	ADD
222	06	2	ADD
223	17	1	SUB
224	05	3	ADD
225	07	1	ADD
226	16	2	SUB
227	17	1	SUB
230	14	4	SUB
231	07	1	ADD
232	06	2	ADD
233	17	1	SUB
234	15	3	SUB
235	07	1	ADD
236	16	2	SUB
237	17	1	SUB
240	02	6	ADD
241	07	1	ADD
242	06	2	ADD
243	17	1	SUB
244	05	3	ADD
245	07	1	ADD
246	16	2	SUB
247	17	1	SUB
250	04	4	ADD
251	07	1	ADD
252	06	2	ADD
253	17	1	SUB
254	15	3	SUB
255	07	1	ADD
256	16	2	SUB
257	17	1	SUB
260	13	5	SUB
261	07	1	ADD
262	06	2	ADD
263	17	1	SUB
264	05	3	ADD
265	07	1	ADD
266	16	2	SUB
267	17	1	SUB
270	14	4	SUB
271	07	1	ADD
272	06	2	ADD
273	17	1	SUB
274	15	3	SUB
275	07	1	ADD
276	16	2	SUB
277	17	1	SUB

ADDRESS (OCTAL)	CONTENTS (OCTAL)	FUNCTION SHIFT BY	FUNCTION OPERATION
300	02	6	ADD
301	07	1	ADD
302	06	2	ADD
303	17	1	SUB
304	05	3	ADD
305	07	1	ADD
306	16	2	SUB
307	17	1	SUB
310	04	4	ADD
311	07	1	ADD
312	06	2	ADD
313	17	1	SUB
314	15	3	SUB
315	07	1	ADD
316	16	2	SUB
317	17	1	SUB
320	03	5	ADD
321	07	1	ADD
322	06	2	ADD
323	17	1	SUB
324	05	3	ADD
325	07	1	ADD
326	16	2	SUB
327	17	1	SUB
330	14	4	SUB
331	07	1	ADD
332	06	2	ADD
333	17	1	SUB
334	15	3	SUB
335	07	1	ADD
336	16	2	SUB
337	17	1	SUB
340	12	6	SUB
341	07	1	ADD
342	06	2	ADD
343	17	1	SUB
344	05	3	ADD
345	07	1	ADD
346	16	2	SUB
347	17	1	SUB
350	04	4	ADD
351	07	1	ADD
352	06	2	ADD
353	17	1	SUB
354	15	3	SUB
355	07	1	ADD
356	16	2	SUB
357	17	1	SUB
360	13	4	SUB
361	07	1	ADD
362	06	2	ADD
363	17	1	SUB
364	05	3	ADD
365	07	1	ADD
366	16	2	SUB
367	17	1	SUB
370	14	4	SUB
371	07	1	ADD
372	06	2	ADD
373	17	1	SUB
374	15	3	SUB
375	07	1	ADD
376	16	2	SUB
377	17	1	SUB

REVISIONS		
CHK	CHANGE NO.	REV.

(SLOT 02)

TITLE FRACTION PROC. HIGH ORDER

SCALE — SHEET 13 OF 13

SIZE D CODE CS NUMBER M8126-0-1 REV. C

DIST.

DEC FORM NO. DRD 158

"THIS DRAWING AND SPECIFICATIONS, HEREIN, ARE THE PROPERTY OF DIGITAL EQUIPMENT CORPORATION AND SHALL NOT BE REPRODUCED OR COPIED OR USED IN WHOLE OR IN PART AS THE BASIS FOR THE MANUFACTURE OR SALE OF ITEMS WITHOUT WRITTEN PERMISSION. COPYRIGHT © 1975 DIGITAL EQUIPMENT CORPORATION"

NOTES:

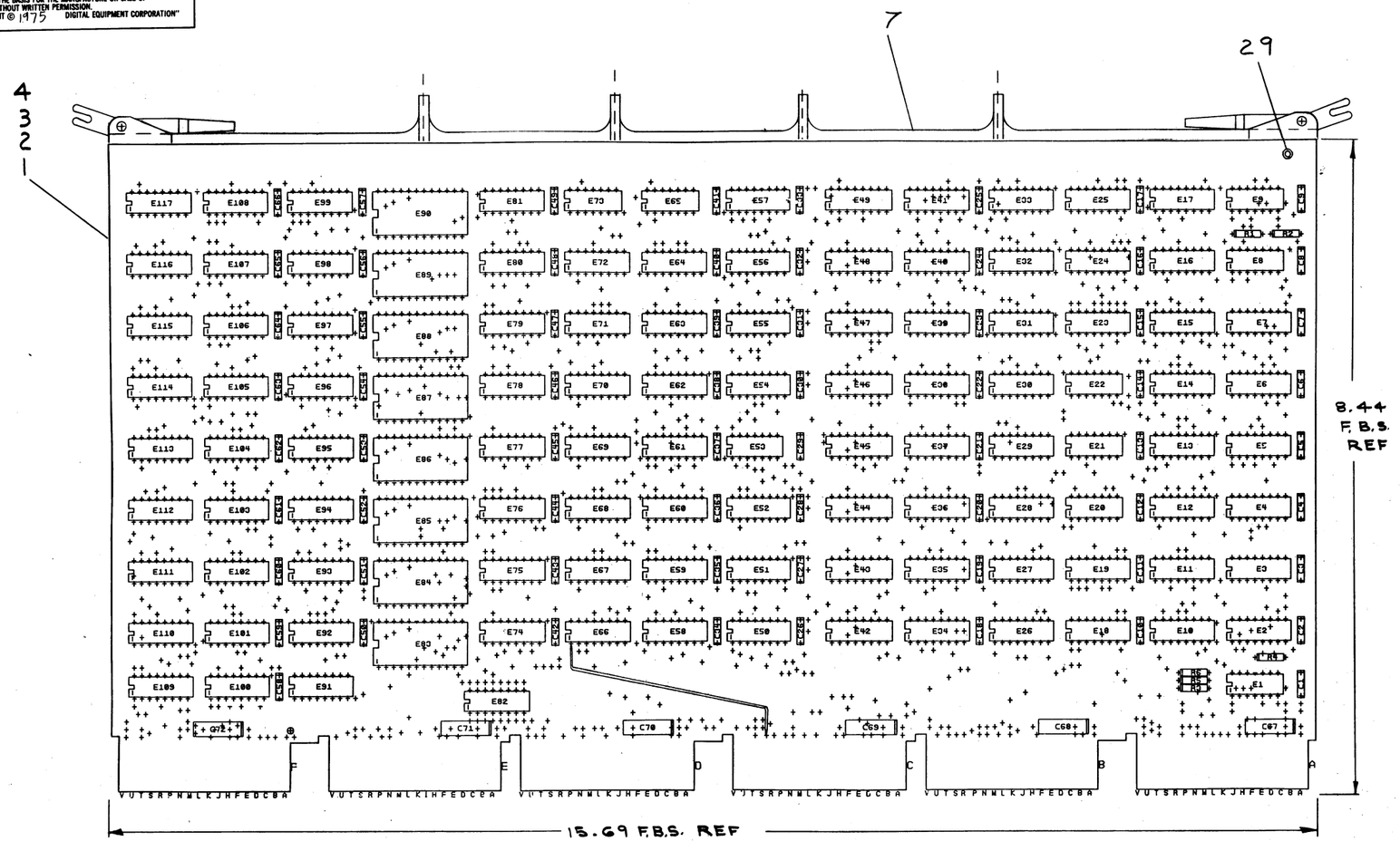

AA2, AV1, CA2, CV1 +5V
BA2, BV1, DA2, DV1
EA2, EV1, FA2, FV1

C1-C66, .01uf

C67 - C72 6.8uf

AC2, AN2, AH1, AT1
BC2, BN2, BH1, BT1
CC2, CN2, CH1, CT1 GND
DC2, DN2, DH1, DT1
EC2, EN2, EH1, ET1
FC2, FN2, FH1, FT1

IC 74S182	8	16
IC 74S175	8	16
IC 74157	8	16
IC 74174	8	16
IC 74175	8	16
IC 74S174	8	16
IC 74S158	8	16
IC 74S157	8	16
IC 74S153	8	16
IC 74S181	12	24
IC 74153	8	16
IC TYPE	GND	+5V

GND AND 5V ARE USUALLY PIN 7 AND 14 RESPECTIVELY EXCEPTIONS ARE STATED ABOVE

IC PIN LOCATIONS

B.L.M. P.754

DEC FORM NO. DRD 135.B

QTY	REF. DESIGNATION	DESCRIPTION	PART NO.	ITEM NO.
REF		X-Y COORDINATE HOLE LOCATION	K-CO-M8127-Ø-4	1
REF		ASSY/DRILLING HOLE LAYOUT	D-AH-M8127-Ø-5	2
REF		MODULE ECO HISTORY	B-MH-M8127-Ø-6	3
1		ETCHED CIRCUIT BOARD	5011871	4
66	C1 THRU C66	CAPACITOR, .01uf	1031610-00	5
6	C67 THRU C72	CAPACITOR, 6.8uf	1005306	6
1		HANDLE HEX MODULE	1210711-2	7
3	R1,R3,R5	RESISTOR, 330 OHM, 1/4W, 5%	1300295	8
3	R2,R4,R6	RESISTOR, 680 OHM, 1/4W, 5%	1301424	9
1	E1	I.C. DEC 8242	1909712	10
8	E50,E51,E52,E58,E60,E100, E109, E59	I C. DEC 74153	1909937	11
8	E83 THRU E90	I C DEC 74S181	1910531	12
2	E9,E53	I C. DEC 74SØØ	1910532	13
2	E20,E73	I C DEC 74SØ4	1910534	14
1	E21	I C DEC 74S1Ø	1910536	15
3	E8,E22,E65	I C DEC 74S11	1910537	16
3	E23,E25,E57	I.C. DEC 74S153	1910547	17
5	E61 THRU E64,E55	I C DEC 74157	1910655	18
7	E74 THRU E80,	I C. DEC 74S158	1910549	19
10	E2-E6,E92,E94,E95,E97,E98	I C. DEC 74S174	1910550	20
1	E56	I C. DEC 74175	1910651	21
1	E54	I.C. DEC 74174	1910652	22
17	E34 THRU E49,E99	I C. DEC 74S157	1910548	23
2	E7,E81	I.C. DEC 74S175	1910957	24
3	E91,E93,E96	I.C. DEC 74S182	1912097	25
7	E66 THRU E72	I.C. DEC 74S189	1912661	26
34	E10 THRU E19,E26 THRU E33, E101 THRU E108, E110-E117	I.C. DEC 25S1Ø	1912693	27
1	E24	ROM	23ØØ6A2	28
12		EYELET	9006732	29
A/R		#30 AWG WIRE	9105740-55	30

PARTS LIST

FIRST USED ON OPTION MODEL: FP11-C

ETCH BOARD REV. C

DEC NO.	EIA NO.	DEC NO.	EIA NO.

SEMICONDUCTOR CONVERSION CHART

REVISIONS		
CHK	CHANGE NO.	REV.
	ORIGINATED	A
	M8127-ØØØØ1	B

T. NORTHRUP 21-Sep-xxxx 2 JAN '76

DRN. DATE 11-4-75
CHK'D. DATE 11-21-75
ENG. DATE 11/25/75
PROJ. ENG. DATE 11/25/75
PROD. DATE 12/2/75

NEXT HIGHER ASSY: B-LD-FP11-C

SCALE

SHEET 1 OF 14

digital

TITLE: FRACTION PROC. LOW ORDER

SIZE D | CODE CS | NUMBER M8127-Ø-1 | REV. B

DIST.

"THIS DRAWING AND SPECIFICATIONS, HEREIN, ARE THE PROPERTY OF DIGITAL EQUIPMENT CORPORATION AND SHALL NOT BE REPRODUCED OR COPIED OR USED IN WHOLE OR IN PART AS THE BASIS FOR THE MANUFACTURE OR SALE OF ITEMS WITHOUT WRITTEN PERMISSION. COPYRIGHT © 1975 DIGITAL EQUIPMENT CORPORATION"

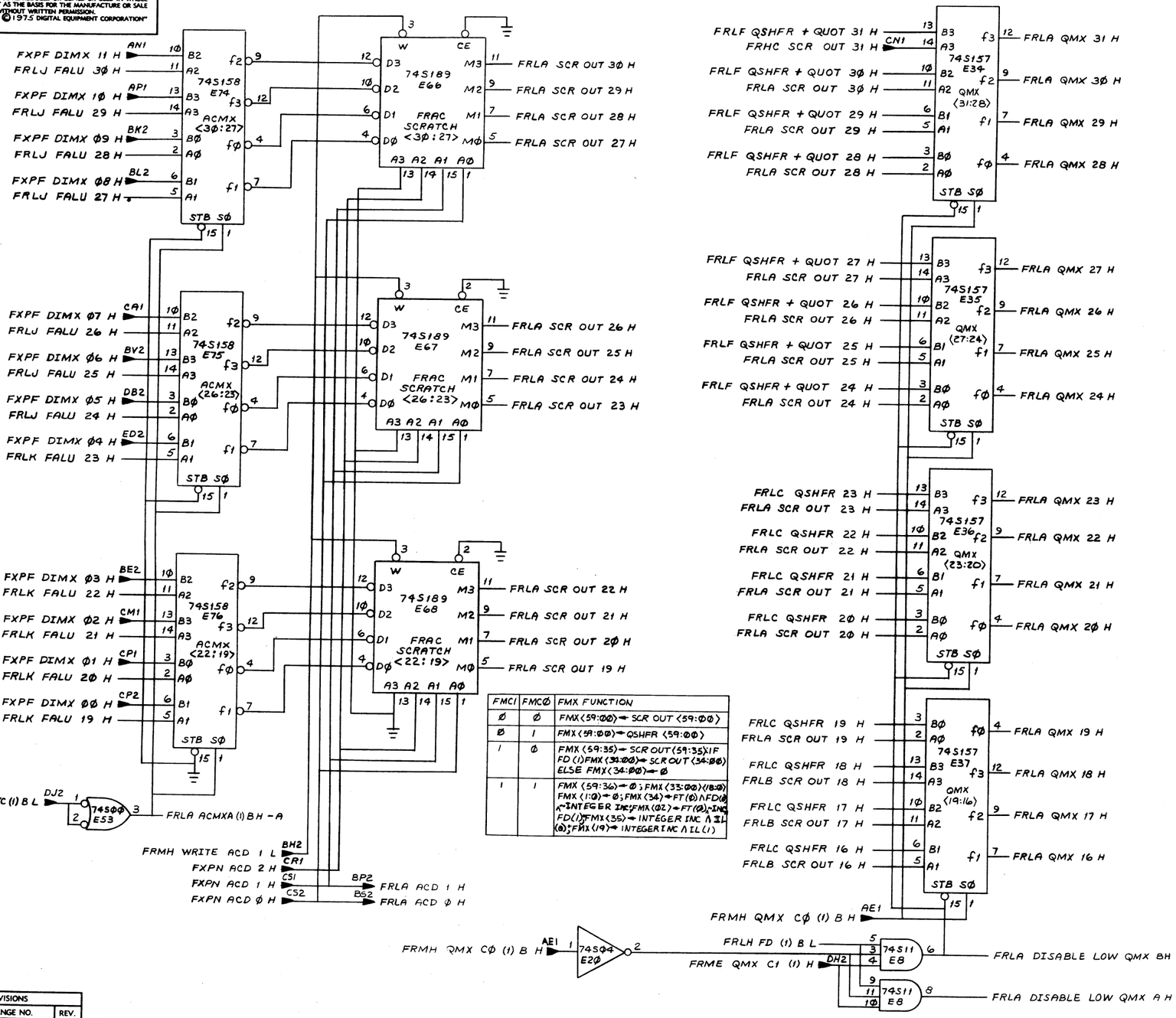

FMCI	FMCØ	FMX FUNCTION
Ø	Ø	FMX<59:ØØ> ← SCR OUT <59:ØØ>
Ø	1	FMX<59:ØØ> ← QSHFR <59:ØØ>
1	Ø	FMX <59:35> ← SCR OUT <59:35> | IF FD (1) FMX <34:ØØ> ← SCR OUT <34:ØØ> ELSE FMX <34:ØØ> ← Ø
1	1	FMX <59:36> ← Ø ; FMX <33:ØØ> <18:Ø> FMX <1:Ø> ← Ø ; FMX <34> ← FT (Ø) ∧ FD (Ø) ∧ ~INTEGER INC ; FMX <Ø2> ← FT (Ø), ~INC FD (1) ; FMX <35> ← INTEGER INC ∧ IL <Ø> ; FMX <19> ← INTEGER INC ∧ IL (1)

(SLOT 3)

REVISIONS		
CHK	CHANGE NO.	REV.

TITLE	SIZE	CODE	NUMBER	REV.
FRACTION PROC. LOW ORDER (FRLA)	D	CS	M8127-Ø-1	B
SCALE —//	SHEET 2 OF 14	DIST.		

DEC FORM NO. DRD 138

"THIS DRAWING AND SPECIFICATIONS, HEREIN, ARE THE PROPERTY OF DIGITAL EQUIPMENT CORPORATION AND SHALL NOT BE REPRODUCED OR COPIED OR USED IN WHOLE OR IN PART AS THE BASIS FOR THE MANUFACTURE OR SALE OF ITEMS WITHOUT WRITTEN PERMISSION. COPYRIGHT © 1975 DIGITAL EQUIPMENT CORPORATION"

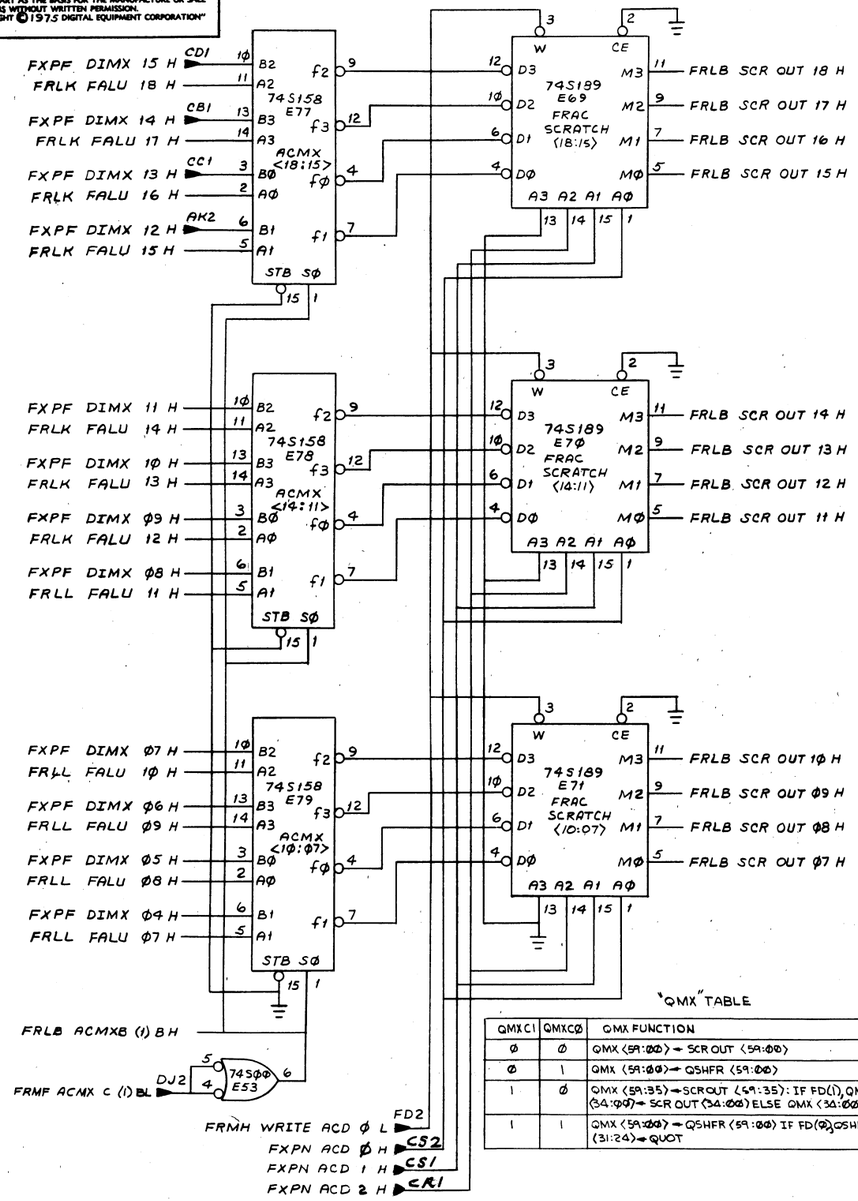

"QMX" TABLE

QMXC1	QMXC0	QMX FUNCTION
0	0	QMX <59:00> ← SCR OUT <59:00>
0	1	QMX <59:00> ← QSHFR <59:00>
1	0	QMX <59:35> ← SCROUT <59:35>: IF FD(1), QMX <34:00> ← SCR OUT <34:00> ELSE QMX <34:00> ← 0
1	1	QMX <59:00> ← QSHFR <59:00> IF FD(0), QSHFR <31:24> ← QUOT

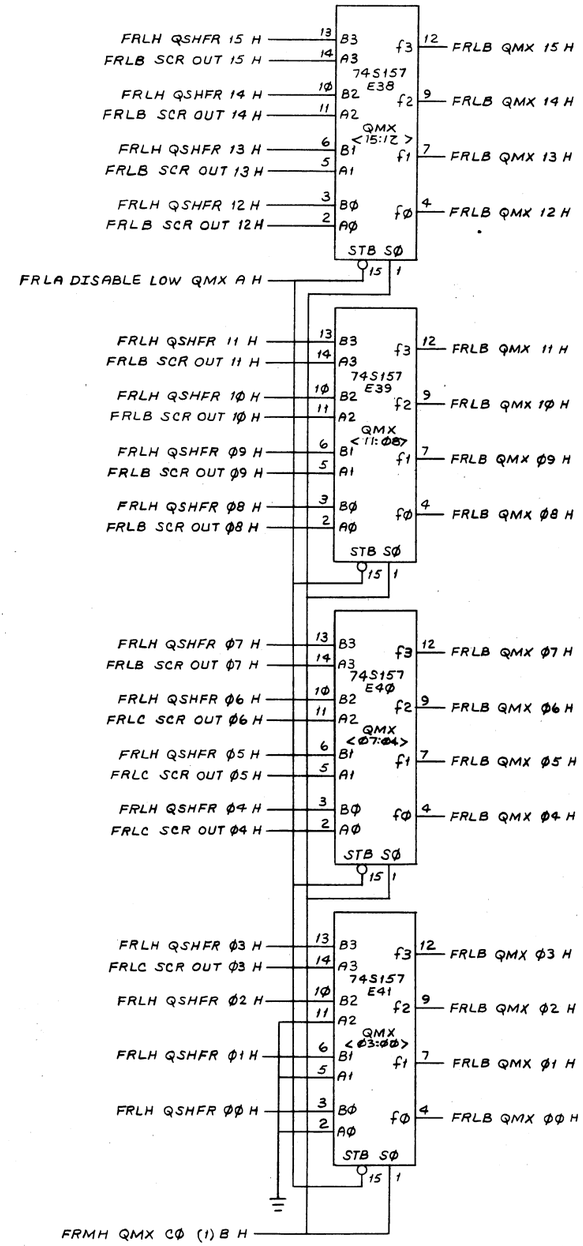

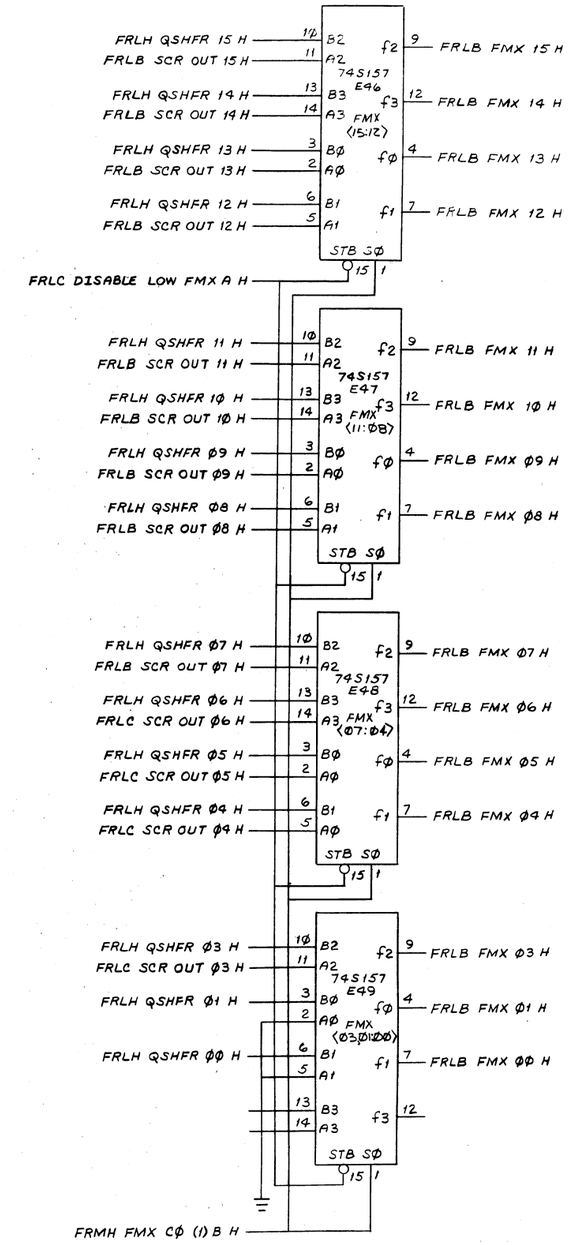

(SLOT 3)

REVISIONS		
CHK	CHANGE NO.	REV.

TITLE	SIZE	CODE	NUMBER	REV.
FRACTION PROC. LOW ORDER (FRLB)	D	CS	M8127-0-1	B
SCALE —	SHEET 3 OF 14	DIST.		

DEC FORM NO. DRD 138

"THIS DRAWING AND SPECIFICATIONS, HEREIN, ARE THE PROPERTY OF DIGITAL EQUIPMENT CORPORATION AND SHALL NOT BE REPRODUCED OR COPIED OR USED IN WHOLE OR IN PART AS THE BASIS FOR THE MANUFACTURE OR SALE OF ITEMS WITHOUT WRITTEN PERMISSION.
COPYRIGHT © 1975 DIGITAL EQUIPMENT CORPORATION"

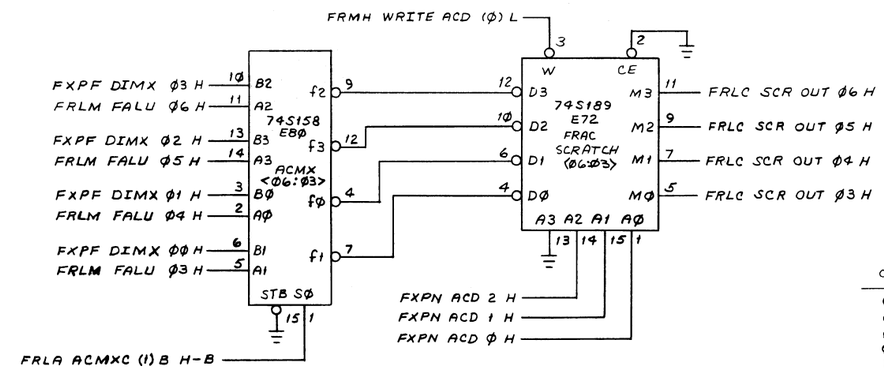

TRUTH TABLE FOR DEC 2551Ø

O_E	S_1	$S_Ø$	$O_Ø$	O_1	O_2	O_3
Ø	Ø	Ø	$I_Ø$	I_1	I_2	I_3
Ø	Ø	1	I_{-1}	$I_Ø$	I_1	I_2
Ø	1	Ø	I_{-2}	I_{-1}	$I_Ø$	I_1
Ø	1	1	I_{-3}	I_{-2}	I_{-1}	$I_Ø$
1	X	X	Z	Z	Z	Z

NOTES: X=DONT CARE
Z=OUTPUT "Off" i.e. IN HIGH IMPEDANCE STATE

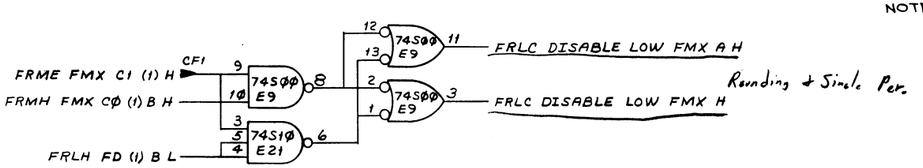

Rounding + Single Per.

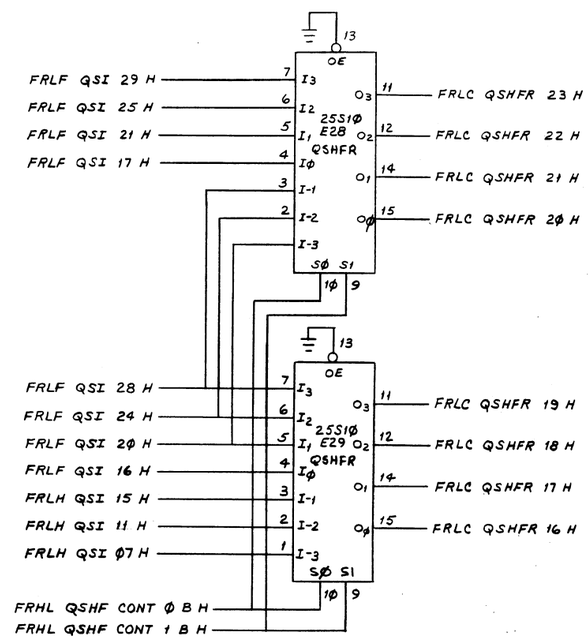

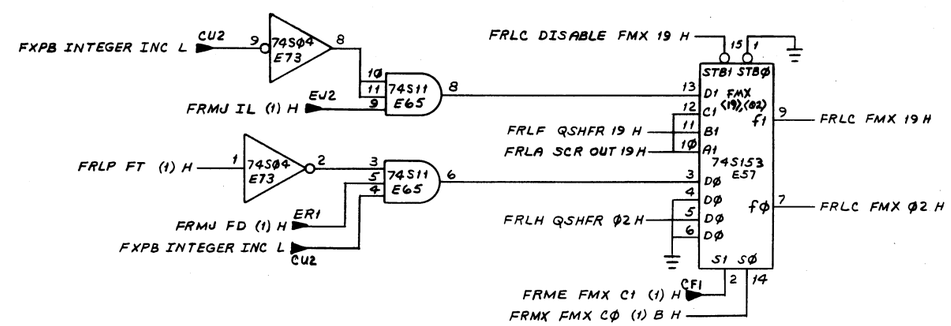

(SLOT 3)

REVISIONS		
CHK	CHANGE NO.	REV.

TITLE	SIZE	CODE	NUMBER	REV.
FRACTION PROC. LOW ORDER (FRLC)	D	CS	M8127-Ø-1	B
SCALE — // —	SHEET 4 OF 14	DIST.		

DEC FORM NO. DRD 138

"THIS DRAWING AND SPECIFICATIONS, HEREIN, ARE THE PROPERTY OF DIGITAL EQUIPMENT CORPORATION AND SHALL NOT BE REPRODUCED OR COPIED OR USED IN WHOLE OR IN PART AS THE BASIS FOR THE MANUFACTURE OR SALE OF ITEMS WITHOUT WRITTEN PERMISSION. COPYRIGHT © 1975 DIGITAL EQUIPMENT CORPORATION"

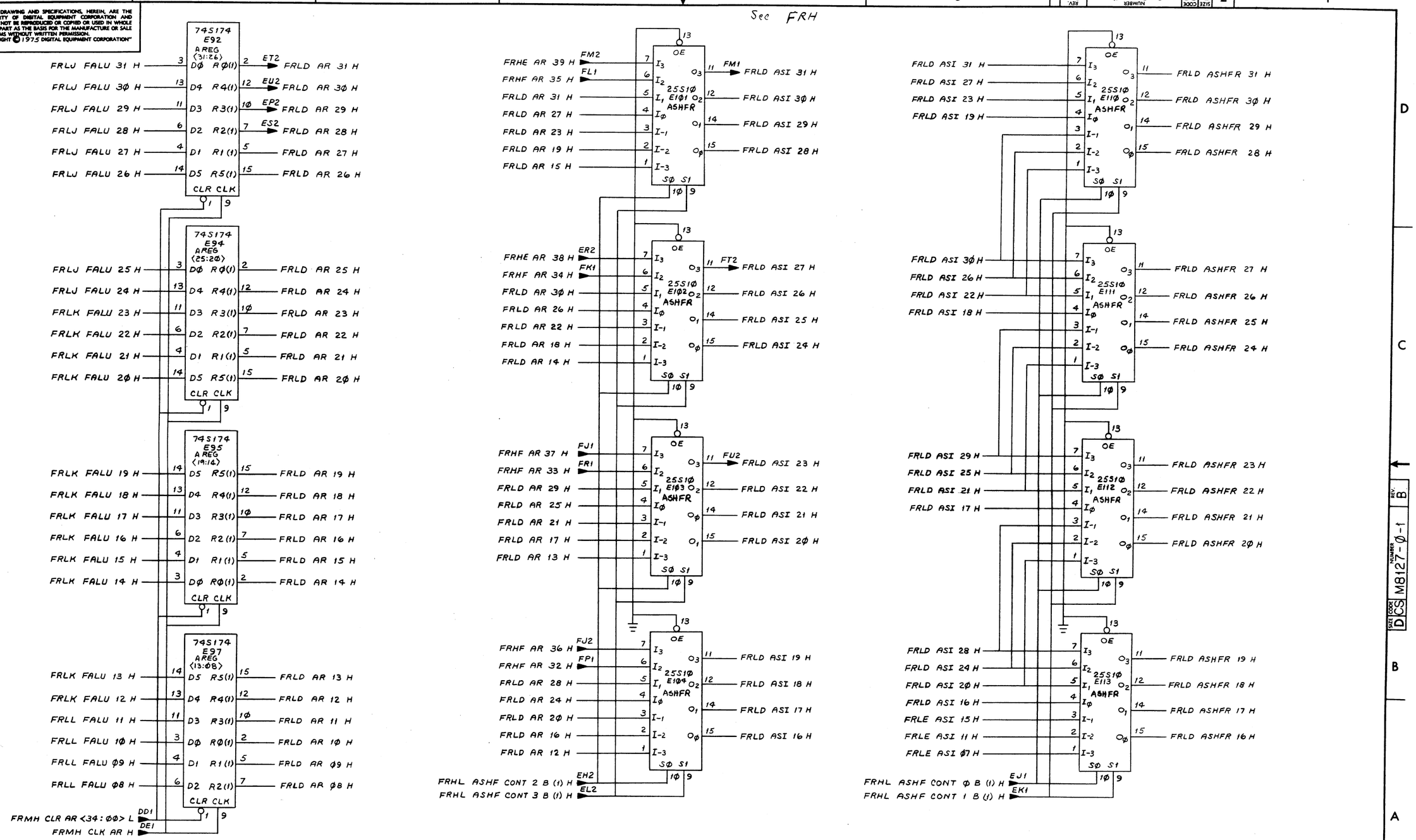

(SLOT 3)

REVISIONS		
CHK	CHANGE NO.	REV.

TITLE	SIZE	CODE	NUMBER	REV.
FRACTION PROC. LOW ORDER (FRLD)	D	CS	M8127-Ø-1	B
SCALE — / /	SHEET 5 OF 14	DIST.		

DEC FORM NO. DRD 138

"THIS DRAWING AND SPECIFICATIONS, HEREIN, ARE THE PROPERTY OF DIGITAL EQUIPMENT CORPORATION AND SHALL NOT BE REPRODUCED OR COPIED OR USED IN WHOLE OR IN PART AS THE BASIS FOR THE MANUFACTURE OR SALE OF ITEMS WITHOUT WRITTEN PERMISSION. COPYRIGHT © 1975 DIGITAL EQUIPMENT CORPORATION"

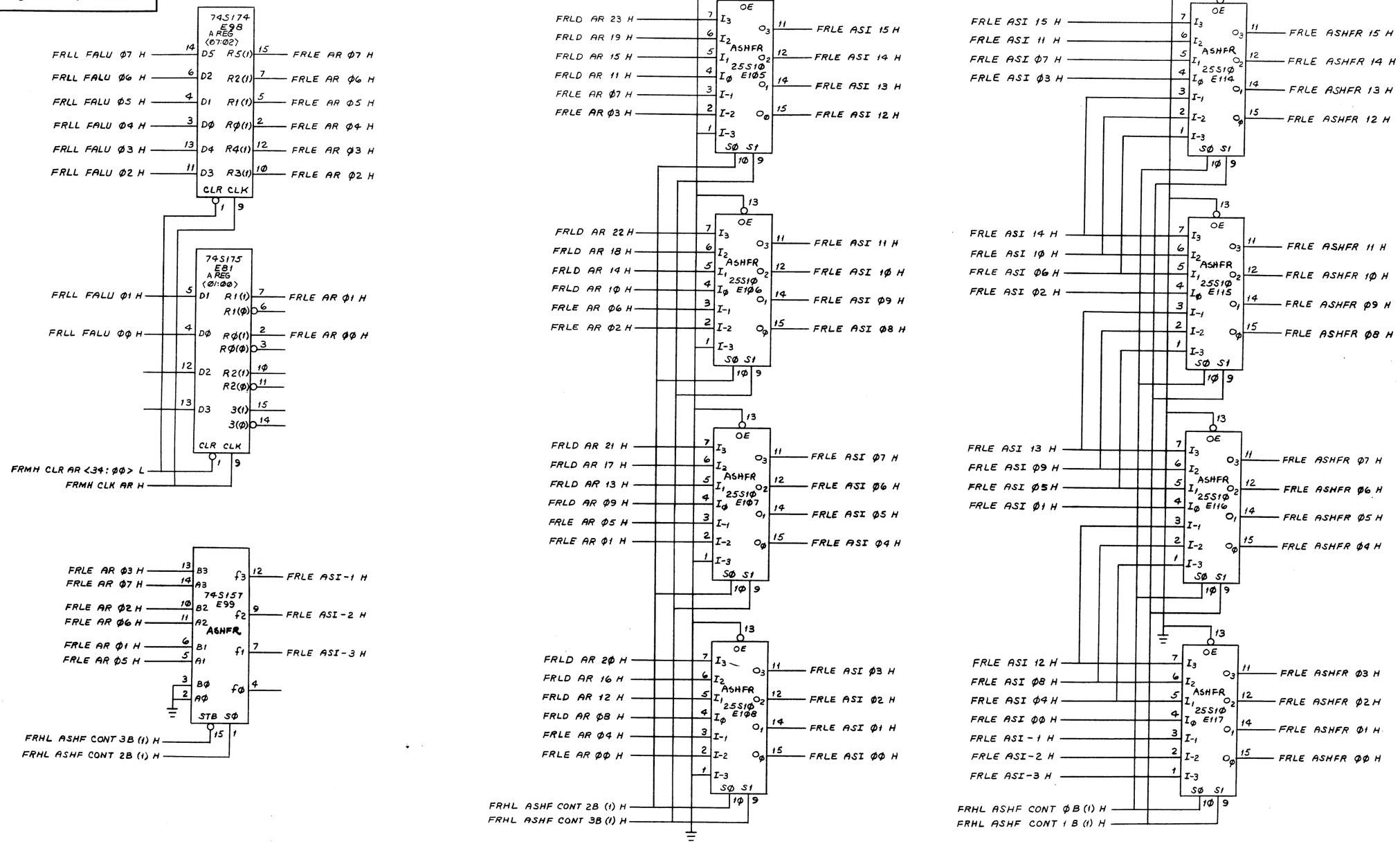

(SLOT 3)

REVISIONS		
CHK	CHANGE NO.	REV.

DEC FORM NO. DRD 138

TITLE	SIZE	CODE	NUMBER	REV.
FRACTION PROC. LOW ORDER (FRLE)	D	CS	M8127-Ø-1	B.
SCALE —//— SHEET 6 OF 14	DIST.			

"THIS DRAWING AND SPECIFICATIONS, HEREIN, ARE THE PROPERTY OF DIGITAL EQUIPMENT CORPORATION AND SHALL NOT BE REPRODUCED OR COPIED OR USED IN WHOLE OR IN PART AS THE BASIS FOR THE MANUFACTURE OR SALE OF ITEMS WITHOUT WRITTEN PERMISSION. COPYRIGHT © '7- DIGITAL EQUIPMENT CORPORATION"

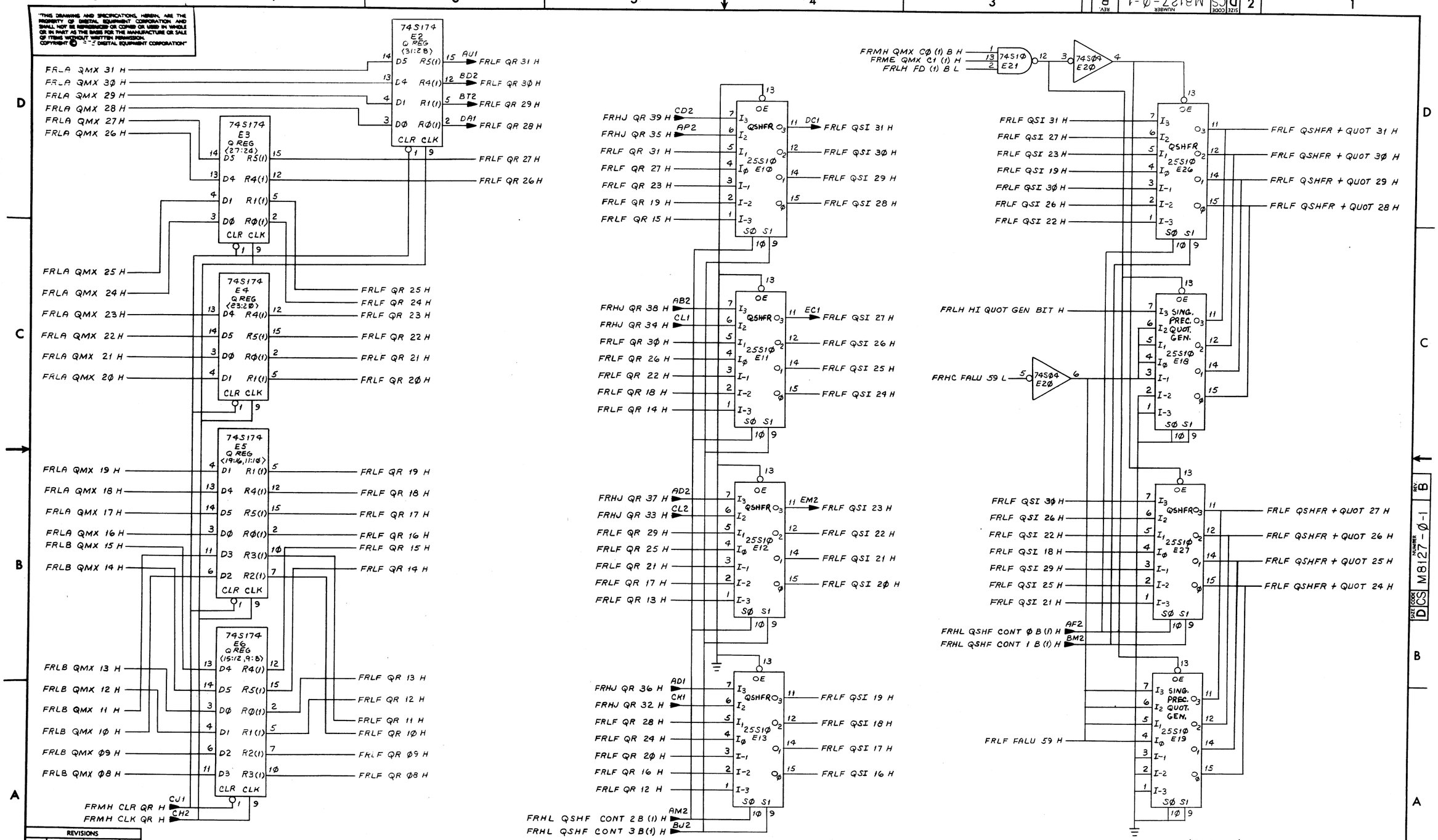

REVISIONS		
CHK	CHANGE NO.	REV.

(SLOT 3)

TITLE FRACTION PROC. LOW ORDER (FRLF)

SCALE —//— SHEET 7 OF 14

SIZE D CODE CS NUMBER M8127-0 REV. B

DIST.

DEC FORM NO. DRD 138

SIZE D CODE CS NUMBER M8127-0-1 REV. B

"THIS DRAWING AND SPECIFICATIONS, HEREIN, ARE THE PROPERTY OF DIGITAL EQUIPMENT CORPORATION AND SHALL NOT BE REPRODUCED OR COPIED OR USED IN WHOLE OR IN PART AS THE BASIS FOR THE MANUFACTURE OR SALE OF ITEMS WITHOUT WRITTEN PERMISSION. COPYRIGHT © 1975 DIGITAL EQUIPMENT CORPORATION"

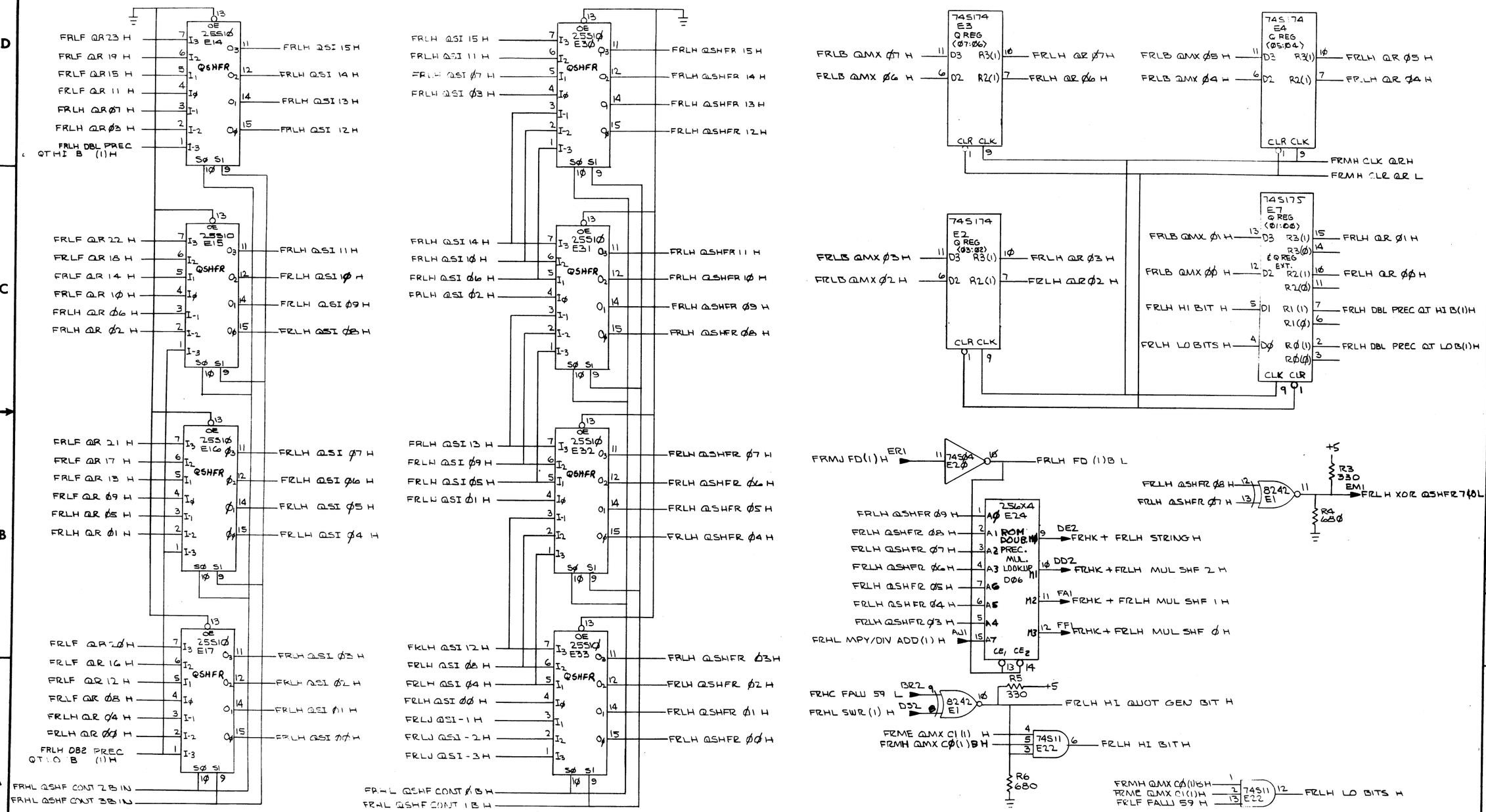

REVISIONS		
CHK	CHANGE NO.	REV.

TITLE	SIZE	CODE	NUMBER	REV.
FRACTION PROC. LOW ORDER (FRLH)	D	CS	M8127-Ø-1	B
SCALE	SHEET 8 OF 14	DIST.		

DEC FORM NO. DRD 130

"THIS DRAWING AND SPECIFICATIONS, HEREIN, ARE THE PROPERTY OF DIGITAL EQUIPMENT CORPORATION AND SHALL NOT BE REPRODUCED OR COPIED OR USED IN WHOLE OR IN PART AS THE BASIS FOR THE MANUFACTURE OR SALE OF ITEMS WITHOUT WRITTEN PERMISSION. COPYRIGHT © 1975 DIGITAL EQUIPMENT CORPORATION"

A/Q SHF CONT 3 2 1 Ø	ASHFR/QSHFR FUNCTION
Ø Ø Ø Ø	SHIFT RIGHT 8 PLACES
Ø Ø Ø 1	" " 7 "
Ø Ø 1 Ø	" " 6 "
Ø Ø 1 1	" " 5 "
Ø 1 Ø Ø	" " 4 "
Ø 1 Ø 1	" " 3 "
Ø 1 1 Ø	" " 2 "
Ø 1 1 1	" " 1 "
1 Ø Ø Ø	NO SHIFT
1 Ø Ø 1	SHIFT LEFT 1 PLACE
1 Ø 1 Ø	" " 2 "
1 Ø 1 1	" " 3 "
1 1 Ø Ø	" " 4 "
1 1 Ø 1	" " 5 "
1 1 1 Ø	" " 6 "
1 1 1 1	" " 7 "

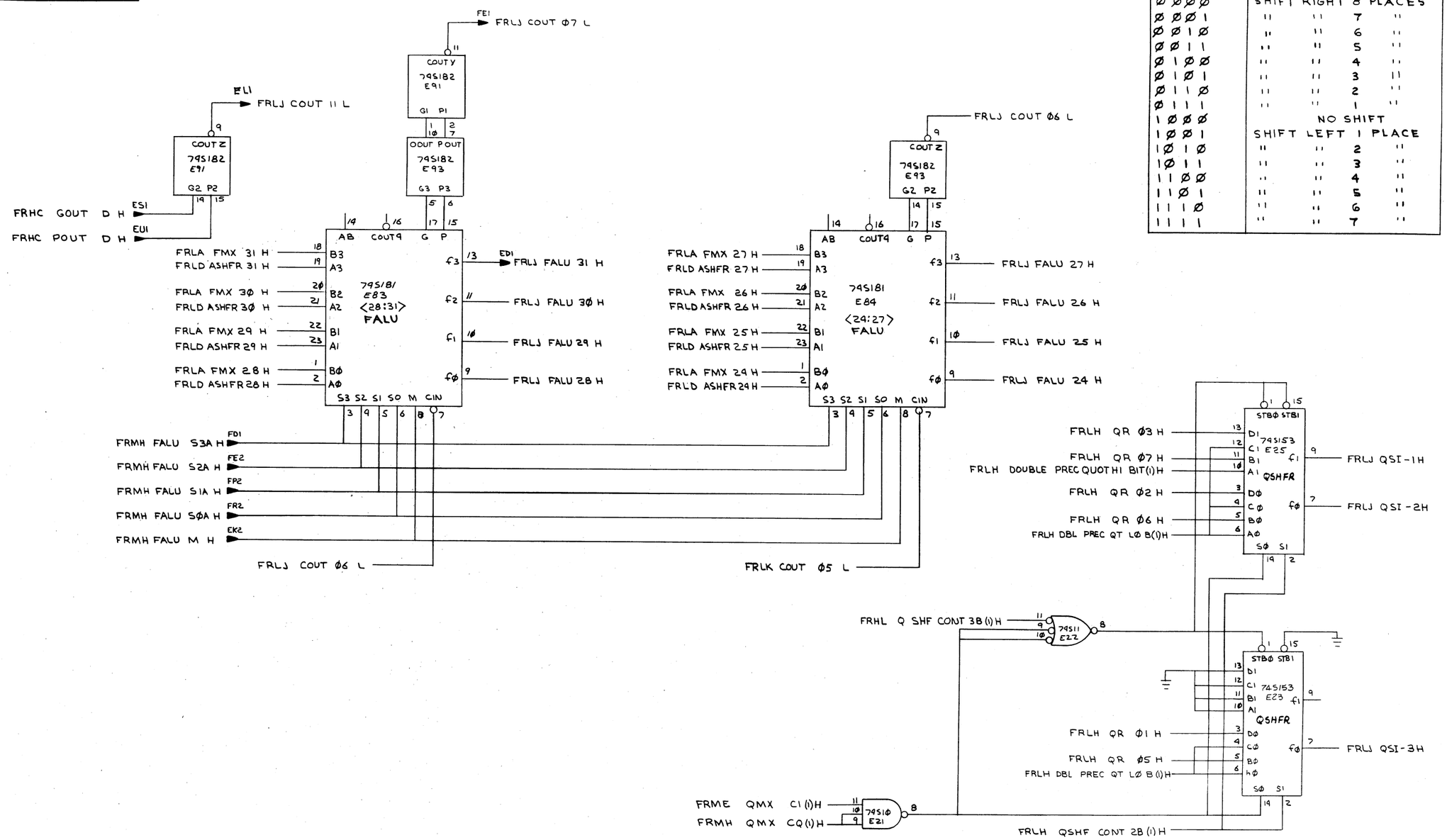

(SLOT 3)

REVISIONS		
CHK	CHANGE NO.	REV.

TITLE FRACTION PROC LOW ORDER (FRLJ)

SIZE D CODE CS NUMBER M8127-Ø- REV. B

SCALE —//— SHEET 4 OF 14 DIST.

DEC FORM NO. DRD 138

"THIS DRAWING AND SPECIFICATIONS, HEREIN, ARE THE PROPERTY OF DIGITAL EQUIPMENT CORPORATION AND SHALL NOT BE REPRODUCED OR COPIED OR USED IN WHOLE OR IN PART AS THE BASIS FOR THE MANUFACTURE OR SALE OF ITEMS WITHOUT WRITTEN PERMISSION. COPYRIGHT © 1975 DIGITAL EQUIPMENT CORPORATION"

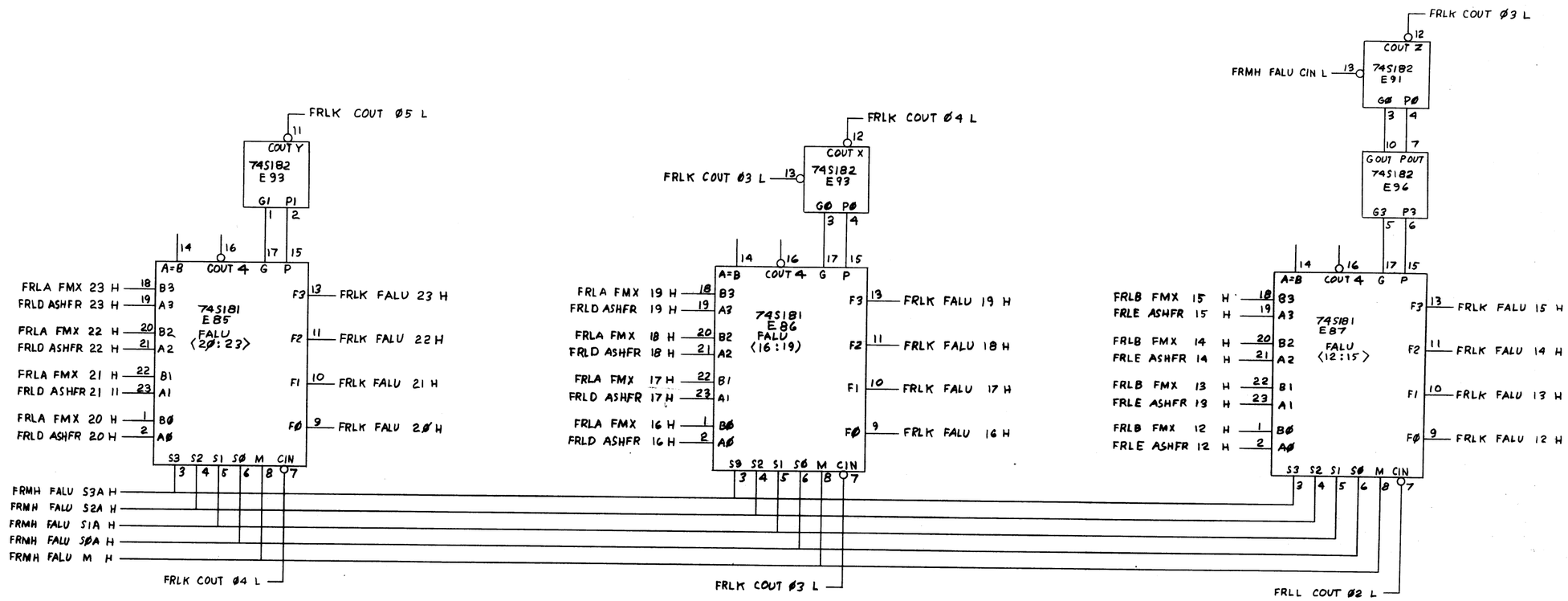

(SLOT 3)

REVISIONS		
CHK	CHANGE NO.	REV.

TITLE	SIZE	CODE	NUMBER	REV.
FRACTION (FRLK) PROC LOW ORDER	D	CS	M8127-Ø-1	B
SCALE -/-	SHEET 10 OF 14	DIST.		

DEC FORM NO. DRD 138

"THIS DRAWING AND SPECIFICATIONS, HEREIN, ARE THE PROPERTY OF DIGITAL EQUIPMENT CORPORATION AND SHALL NOT BE REPRODUCED OR COPIED OR USED IN WHOLE OR IN PART AS THE BASIS FOR THE MANUFACTURE OR SALE OF ITEMS WITHOUT WRITTEN PERMISSION.
COPYRIGHT © 1975 DIGITAL EQUIPMENT CORPORATION"

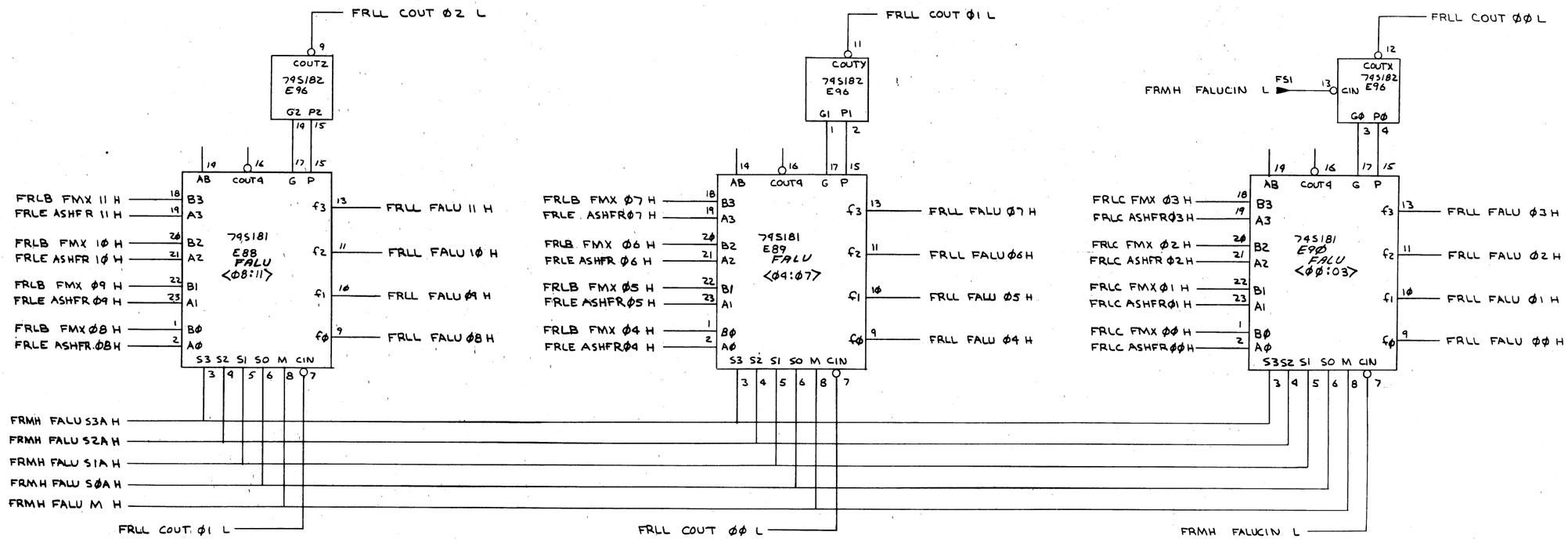

(SLOT 3)

REVISIONS		
CHK	CHANGE NO.	REV.

TITLE	SIZE	CODE	NUMBER	REV.
FRACTION PROC LOW ORDER (FRLL)	D	CS	M8127-Ø-1	B
SCALE —	SHEET 11 OF 14	DIST.		

DEC FORM NO. DRD 128

"THIS DRAWING AND SPECIFICATIONS, HEREIN, ARE THE PROPERTY OF DIGITAL EQUIPMENT CORPORATION AND SHALL NOT BE REPRODUCED OR COPIED OR USED IN WHOLE OR IN PART AS THE BASIS FOR THE MANUFACTURE OR SALE OF ITEMS WITHOUT WRITTEN PERMISSION. COPYRIGHT © 1975 DIGITAL EQUIPMENT CORPORATION"

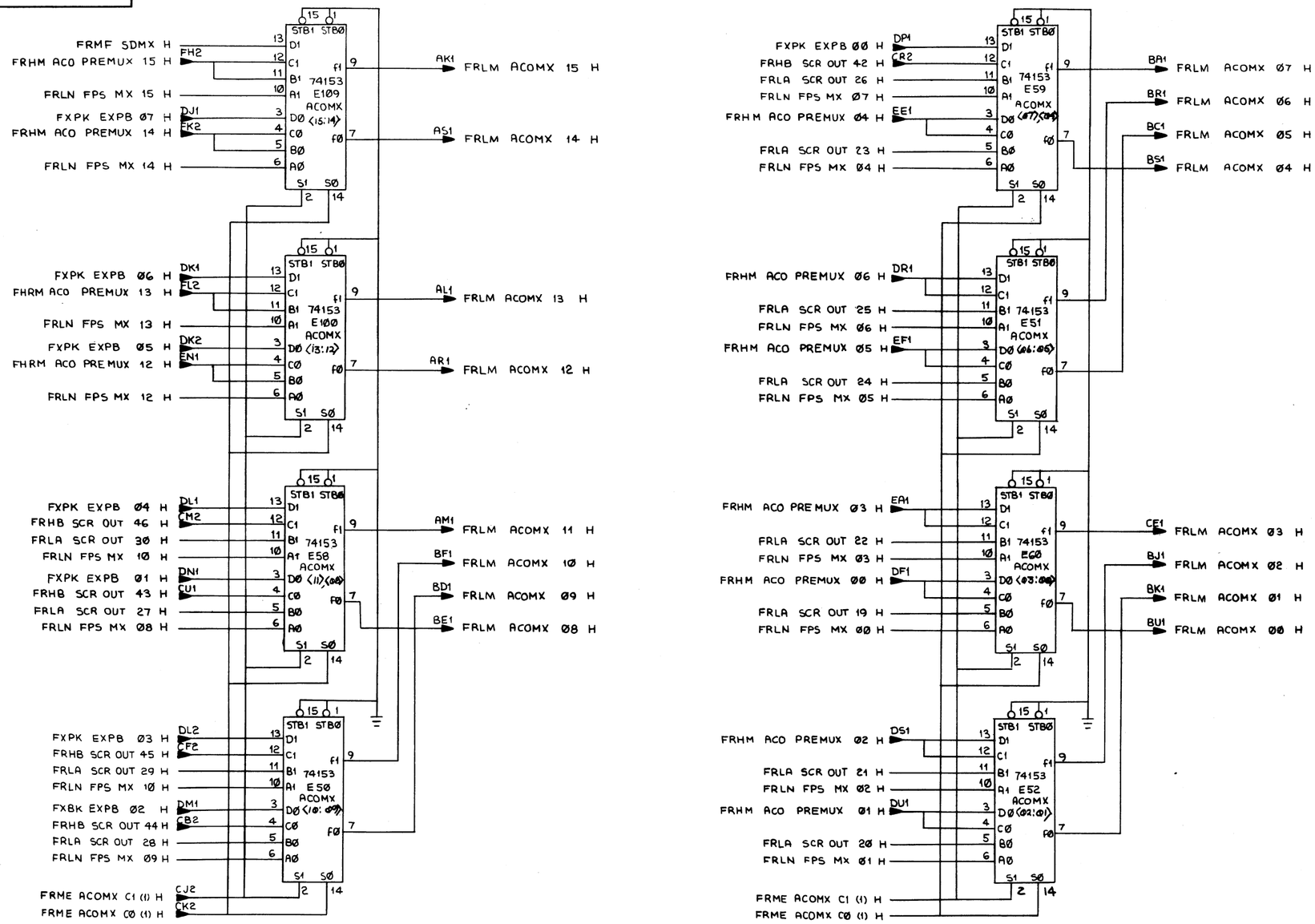

(SLOT 3)

REVISIONS		
CHK	CHANGE NO.	REV.

TITLE	SIZE	CODE	NUMBER	REV.
FRACTION (FRLM) PROC. LOW ORDER	D	CS	M8127-0-1	B
SCALE —//—	SHEET 12 OF 14	DIST.		

DEC FORM NO. DRD 138

"THIS DRAWING AND SPECIFICATIONS, HEREIN, ARE THE PROPERTY OF DIGITAL EQUIPMENT CORPORATION AND SHALL NOT BE REPRODUCED OR COPIED OR USED IN WHOLE OR IN PART AS THE BASIS FOR THE MANUFACTURE OR SALE OF ITEMS WITHOUT WRITTEN PERMISSION.
COPYRIGHT © 1975 DIGITAL EQUIPMENT CORPORATION"

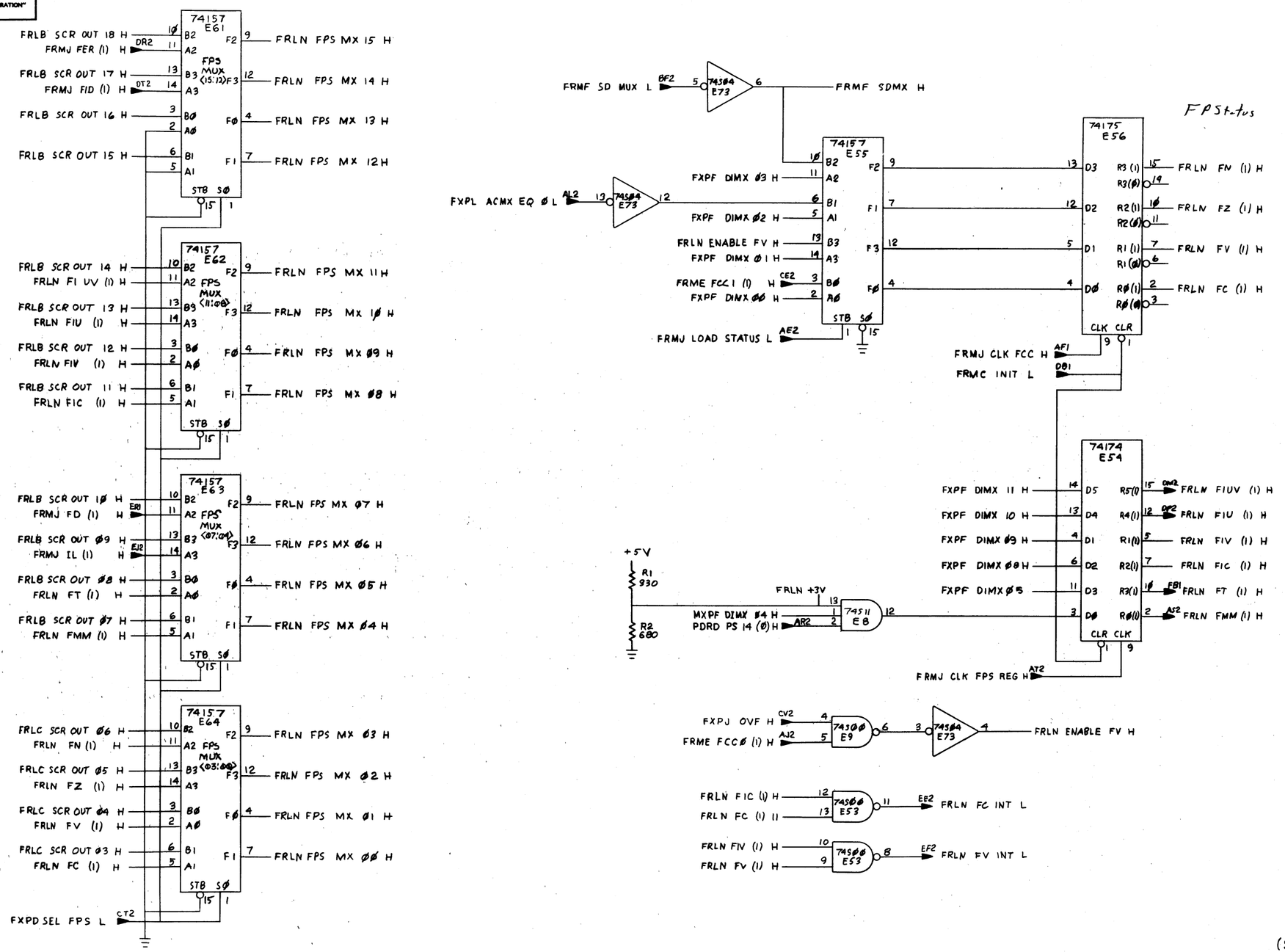

(SLOT 3)

REVISIONS		
CHK	CHANGE NO.	REV.

TITLE FRACTION (FRLN) PROC LOW ORDER

SIZE D CODE CS NUMBER M8127-0-1 REV. B

SCALE — SHEET 13 OF 14 DIST.

DEC FORM NO. DRD 138

"THIS DRAWING AND SPECIFICATIONS, HEREIN, ARE THE PROPERTY OF DIGITAL EQUIPMENT CORPORATION AND SHALL NOT BE REPRODUCED OR COPIED OR USED IN WHOLE OR IN PART AS THE BASIS FOR THE MANUFACTURE OR SALE OF ITEMS WITHOUT WRITTEN PERMISSION.
COPYRIGHT © 1975 DIGITAL EQUIPMENT CORPORATION"

MULTIPLY CONTROL LOOKUP ROM

ADDRESS (OCTAL)	CONTENTS (OCTAL)	FUNCTION SHIFT BY	FUNCTION OPERATION
000	07	1	ADD
001	06	2	ADD
002	17	1	SUB
003	05	3	ADD
004	07	1	ADD
005	16	2	SUB
006	17	1	SUB
007	04	4	ADD
010	07	1	ADD
011	06	2	ADD
012	17	1	SUB
013	15	3	SUB
014	07	1	ADD
015	16	2	SUB
016	17	1	SUB
017	03	5	ADD
020	07	1	ADD
021	06	2	ADD
022	17	1	SUB
023	15	3	SUB
024	07	1	ADD
025	16	2	SUB
026	17	1	SUB
027	14	4	SUB
030	07	1	ADD
031	06	2	ADD
032	17	1	SUB
033	15	3	SUB
034	07	1	ADD
035	16	2	SUB
036	17	1	SUB
037	02	6	ADD
040	07	1	ADD
041	06	2	ADD
042	17	1	SUB
043	05	3	ADD
044	07	1	ADD
045	16	2	SUB
046	17	1	SUB
047	04	4	ADD
050	07	1	ADD
051	06	2	ADD
052	17	1	SUB
053	15	3	SUB
054	07	1	ADD
055	16	2	SUB
056	17	1	SUB
057	13	5	SUB
060	07	1	ADD
061	06	2	ADD
062	17	1	SUB
063	05	3	ADD
064	07	1	ADD
065	16	2	SUB
066	17	1	SUB
067	14	4	SUB
070	07	1	ADD
071	06	2	ADD
072	17	1	SUB
073	15	3	SUB
074	07	1	ADD
075	16	2	SUB
076	17	1	SUB
077	12	6	SUB

ADDRESS (OCTAL)	CONTENTS (OCTAL)	FUNCTION SHIFT BY	FUNCTION OPERATION
100	07	1	ADD
101	06	2	ADD
102	17	1	SUB
103	05	3	ADD
104	07	1	ADD
105	16	2	SUB
106	17	1	SUB
107	04	4	ADD
110	07	1	ADD
111	06	2	ADD
112	17	1	SUB
113	15	3	SUB
114	07	1	ADD
115	16	2	SUB
116	17	1	SUB
117	03	5	ADD
120	07	1	ADD
121	06	2	ADD
122	17	1	SUB
123	05	3	ADD
124	07	1	ADD
125	16	2	SUB
126	17	1	SUB
127	14	4	SUB
130	07	1	ADD
131	06	2	ADD
132	17	1	SUB
133	15	3	SUB
134	07	1	ADD
135	16	2	SUB
136	17	1	SUB
137	12	6	SUB
140	07	1	ADD
141	06	2	ADD
142	17	1	SUB
143	05	3	ADD
144	07	1	ADD
145	16	2	SUB
146	17	1	SUB
147	04	4	ADD
150	07	1	ADD
151	06	2	ADD
152	17	1	SUB
153	15	3	SUB
154	07	1	ADD
155	16	2	SUB
156	17	1	SUB
157	13	5	SUB
160	07	1	ADD
161	06	2	ADD
162	17	1	SUB
163	05	3	ADD
164	07	1	ADD
165	16	2	SUB
166	17	1	SUB
167	14	4	SUB
170	07	1	ADD
171	06	2	ADD
172	17	1	SUB
173	15	3	SUB
174	07	1	ADD
175	16	2	SUB
176	17	1	SUB
177	12	6	SUB

ADDRESS (OCTAL)	CONTENTS (OCTAL)	FUNCTION SHIFT BY	FUNCTION OPERATION
200	02	6	ADD
201	07	1	ADD
202	06	2	ADD
203	17	1	SUB
204	05	3	ADD
205	07	1	ADD
206	16	2	SUB
207	17	1	SUB
210	04	4	ADD
211	07	1	ADD
212	06	2	ADD
213	17	1	SUB
214	15	3	SUB
215	07	1	ADD
216	16	2	SUB
217	17	1	SUB
220	03	5	ADD
221	07	1	ADD
222	06	2	ADD
223	17	1	SUB
224	05	3	ADD
225	07	1	ADD
226	16	2	SUB
227	17	1	SUB
230	14	4	SUB
231	07	1	ADD
232	06	2	ADD
233	17	1	SUB
234	15	3	SUB
235	07	1	ADD
236	16	2	SUB
237	17	1	SUB
240	02	6	ADD
241	07	1	ADD
242	06	2	ADD
243	17	1	SUB
244	05	3	ADD
245	07	1	ADD
246	16	2	SUB
247	17	1	SUB
250	04	4	ADD
251	07	1	ADD
252	06	2	ADD
253	17	1	SUB
254	15	3	SUB
255	07	1	ADD
256	16	2	SUB
257	17	1	SUB
260	13	5	SUB
261	07	1	ADD
262	06	2	ADD
263	17	1	SUB
264	05	3	ADD
265	07	1	ADD
266	16	2	SUB
267	17	1	SUB
270	14	4	SUB
271	07	1	ADD
272	06	2	ADD
273	17	1	SUB
274	15	3	SUB
275	07	1	ADD
276	16	2	SUB
277	17	1	SUB

ADDRESS (OCTAL)	CONTENTS (OCTAL)	FUNCTION SHIFT BY	FUNCTION OPERATION
300	02	6	ADD
301	07	1	ADD
302	06	2	ADD
303	17	1	SUB
304	05	3	ADD
305	07	1	ADD
306	16	2	SUB
307	17	1	SUB
310	04	4	ADD
311	07	1	ADD
312	06	2	ADD
313	17	1	SUB
314	15	3	SUB
315	07	1	ADD
316	16	2	SUB
317	17	1	SUB
320	03	5	ADD
321	07	1	ADD
322	06	2	ADD
323	17	1	SUB
324	05	3	ADD
325	07	1	ADD
326	16	2	SUB
327	17	1	SUB
330	14	4	SUB
331	07	1	ADD
332	06	2	ADD
333	17	1	SUB
334	15	3	SUB
335	07	1	ADD
336	16	2	SUB
337	17	1	SUB
340	12	6	SUB
341	07	1	ADD
342	06	2	ADD
343	17	1	SUB
344	05	3	ADD
345	07	1	ADD
346	16	2	SUB
347	17	1	SUB
350	04	4	ADD
351	07	1	ADD
352	06	2	ADD
353	17	1	SUB
354	15	3	SUB
355	07	1	ADD
356	16	2	SUB
357	17	1	SUB
360	13	4	SUB
361	07	1	ADD
362	06	2	ADD
363	17	1	SUB
364	05	3	ADD
365	07	1	ADD
366	16	2	SUB
367	17	1	SUB
370	14	4	SUB
371	07	1	ADD
372	06	2	ADD
373	17	1	SUB
374	15	3	SUB
375	07	1	ADD
376	16	2	SUB
377	17	1	SUB

(SLOT 3)

REVISIONS		
CHK	CHANGE NO.	REV.

TITLE FRACTION PROC. LOW ORDER (FRLP)
SCALE — SHEET 14 OF 14
SIZE D CODE CS NUMBER M8127-0-1 REV. B
DIST.

"THIS DRAWING AND SPECIFICATIONS, HEREIN, ARE THE PROPERTY OF DIGITAL EQUIPMENT CORPORATION AND SHALL NOT BE REPRODUCED OR COPIED OR USED IN WHOLE OR IN PART AS THE BASIS FOR THE MANUFACTURE OR SALE OF ITEMS WITHOUT WRITTEN PERMISSION. COPYRIGHT © 1975 DIGITAL EQUIPMENT CORPORATION"

NOTES: 1.) E8, AND E73 ARE SPARE IC LOCATIONS
2.) REF. DES. C29 IS NOT USED

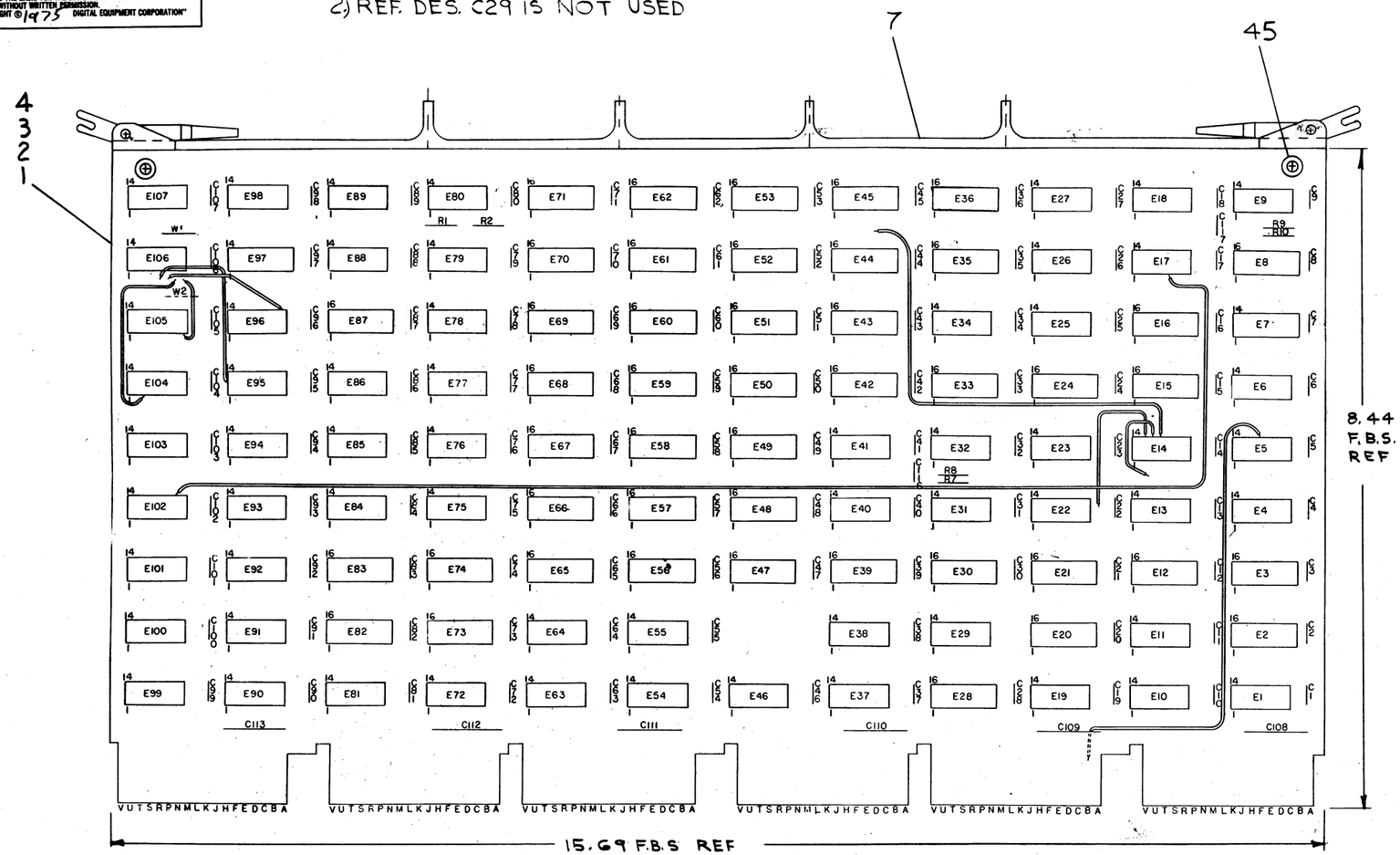

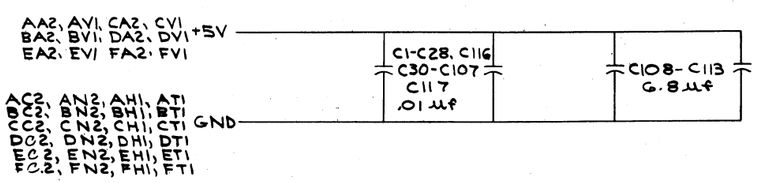

IC 74175	8	16
256x4 ROM	8	16
IC 74S175	8	16
IC 74S151	8	16
IC 74157	8	16
IC 74S174	8	16
IC 74S112	8	16
IC 74193	8	16
IC 74151	8	16
IC TYPE	GND	+5V

GND AND 5V ARE USUALLY PIN 7 AND 14 RESPECTIVELY EXCEPTIONS ARE STATED ABOVE

IC PIN LOCATIONS

QTY	REF. DESIGNATION	DESCRIPTION	PART NO.	ITEM NO.
REF		X-Y COORDINATE HOLE LOCATION	K-CO-M8128-Ø-4	1
REF		ASSY/DRILLING HOLE LAYOUT	D-AH-M8128-Ø-5	2
REF		MODULE ECO HISTORY	B-MH-M8128-Ø-6	3
1		ETCHED CIRCUIT BOARD	5011872	4
108	C1 THRU C28, C30 THRU C107, C116, C117	CAPACITOR, .01uf	1001610-ØØ	5
6	C108 THRU C113	CAPACITOR, 6.8uf	1005306	6
1		HANDLE HEX MODULE	1210711-2	7
1	R1	SPARE		8
2	R8, R10	RESISTOR, 560 OHM, 1/4W, 5%	1301890	9
1	R2	RESISTOR, 100 OHM, 1/4W, 5%	1300229	10
2	R7, R9	RESISTOR, 270 OHM, 1/4W, 5%	1301972	11
3	E35, E36, E87	I.C. DEC 74151	1909936	12
1	E27	I.C DEC 7486	1910011	13
1	E16	I.C. DEC 74193	1910018	14
9	E14, E17, E55, E75, E78, E84, E98, E100, E106	I.C. DEC 74SØØ	1910532	15
6	E26, E40, E41, E64, E96, E101	I.C. DEC 74SØ4	1910534	16
7	E6, E18, E72, E80, E89, E94, E102	I.C. DEC 74S1Ø	1910536	17
4	E11, E34, E95, E7	I.C. DEC 74S11	1910537	18
2	E4, E93	I.C. DEC 74S2Ø	1910539	19
9	E29, E37, E88, E46, E90, E99, E103, E20, E79	I.C. DEC 74S4Ø	1910541	20
3	E13, E22, E54	I.C DEC 74S64	1910542	21
9	E1, E5, E9, E10, E19, E63, E81, E105, E107	I.C. DEC 74S74	1910544	22
3	E82, E83, E104	I.C DEC 74S112	1910545	23
7	E76, E77, E85, E86, E91, E92, E38	I.C. DEC 74S14Ø	1910546	24
3	E15, E24, E33	I.C. DEC 74S174	1910550	25
1	E28	I.C. DEC 74157	1910656	26
4	E3, E12, E21, E30	I.C. DEC 74S151	1910956	27
5	E2, E39, E62, E65, E66	I.C. DEC 74S175	1910957	28
5	E23, E25, E31, E32, E97	I C. DEC 74S51	1911712-ØØ-S	29
1	E74	IC DEC 8251-1	1909814	30
1	E47	ROM	23D18A2	31
1	E48	ROM	23D20A2	32
1	E49	ROM	23D29A2	33
1	E50	ROM	23D31A2	34
1	E51	ROM	23D13A2	35
1	E52	ROM	23D19A2	36
1	E53	ROM	23D21A2	37
1	E56	ROM	23D22A2	38
1	E57	ROM	23D14A2	39
1	E58	ROM	23D15A2	40
1	E59	ROM	23D16A2	41
1	E60	ROM	23D17A2	42
1	E61	ROM	23D28A2	43
1	E62	ROM	23D18A2	44
12		EYELET	9006732	45
8	E42-E45, E67, E69, E70, E71	IC DEC 74175	1910651	46
1	W1	JUMPER	9009185	47
A/R		WIRE, 30 AWG	9105740-55	48
				49

PARTS LIST

FIRST USED ON OPTION MODEL	ETCH BOARD REV.
FP11-C	C

DEC NO.	EIA NO.	DEC NO.	EIA NO.

SEMICONDUCTOR CONVERSION CHART

REV.	CHANGE NO.	CHK
A	ORIGINATED	
B	M8128-00001	A. HELENIUS 2 JAN '76

DRN. DATE 12-2-75
CHK'D. DATE
ENG. Allen Helenius KD DATE 12-2-75
PROJ. ENG. Allen Helenius KD DATE 12/2/75
PROD. DATE 1/9/75
NEXT HIGHER ASSY B-DD-FP11-C
SCALE
SHEET 1 OF 11

digital

TITLE FP ROM CONTROL

SIZE D CODE CS NUMBER M8128-Ø-1 REV. B

DIST.

DEC FORM NO. DRD 130-8

"THIS DRAWING AND SPECIFICATIONS, HEREIN, ARE THE PROPERTY OF DIGITAL EQUIPMENT CORPORATION AND SHALL NOT BE REPRODUCED OR COPIED OR USED IN WHOLE OR IN PART AS THE BASIS FOR THE MANUFACTURE OR SALE OF ITEMS WITHOUT WRITTEN PERMISSION.
COPYRIGHT © 1975 DIGITAL EQUIPMENT CORPORATION"

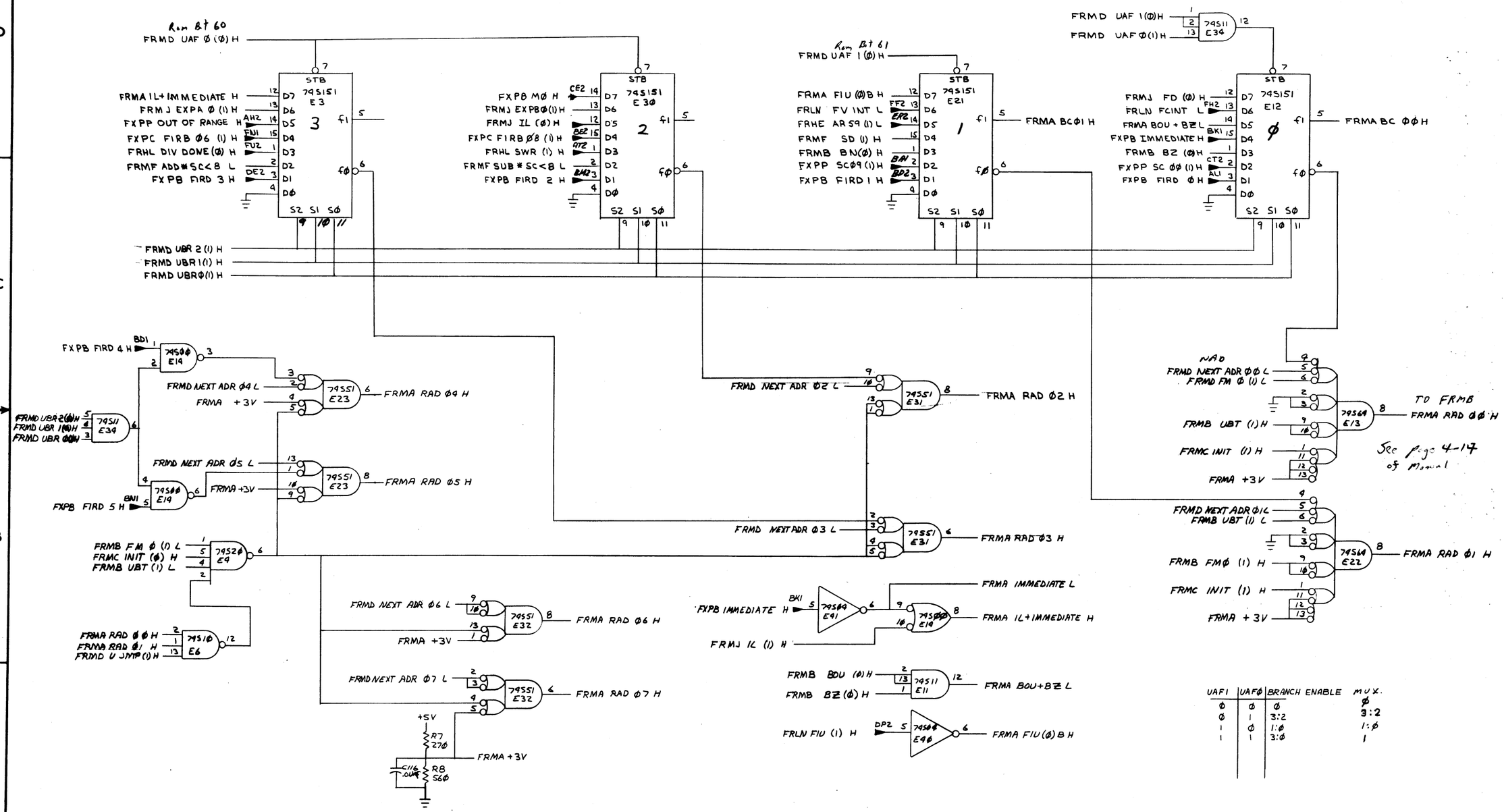

UAF1	UAFØ	BRANCH ENABLE	MUX.
Ø	Ø	Ø	Ø
Ø	1	3:2	3:2
1	Ø	1:Ø	1:Ø
1	1	3:Ø	1

(BRANCH CONTROL (SLOT 4)

REVISIONS		
CHK	CHANGE NO.	REV.

TITLE	SIZE	CODE	NUMBER	REV.
FP ROM CONTROL (FRMA)	D	CS	M8128-Ø-1	B.
SCALE	SHEET 2 OF 11	DIST.		

DEC FORM NO. DRD 138

"THIS DRAWING AND SPECIFICATIONS, HEREIN, ARE THE PROPERTY OF DIGITAL EQUIPMENT CORPORATION AND SHALL NOT BE REPRODUCED OR COPIED OR USED IN WHOLE OR IN PART AS THE BASIS FOR THE MANUFACTURE OR SALE OF ITEMS WITHOUT WRITTEN PERMISSION. COPYRIGHT © 1975 DIGITAL EQUIPMENT CORPORATION"

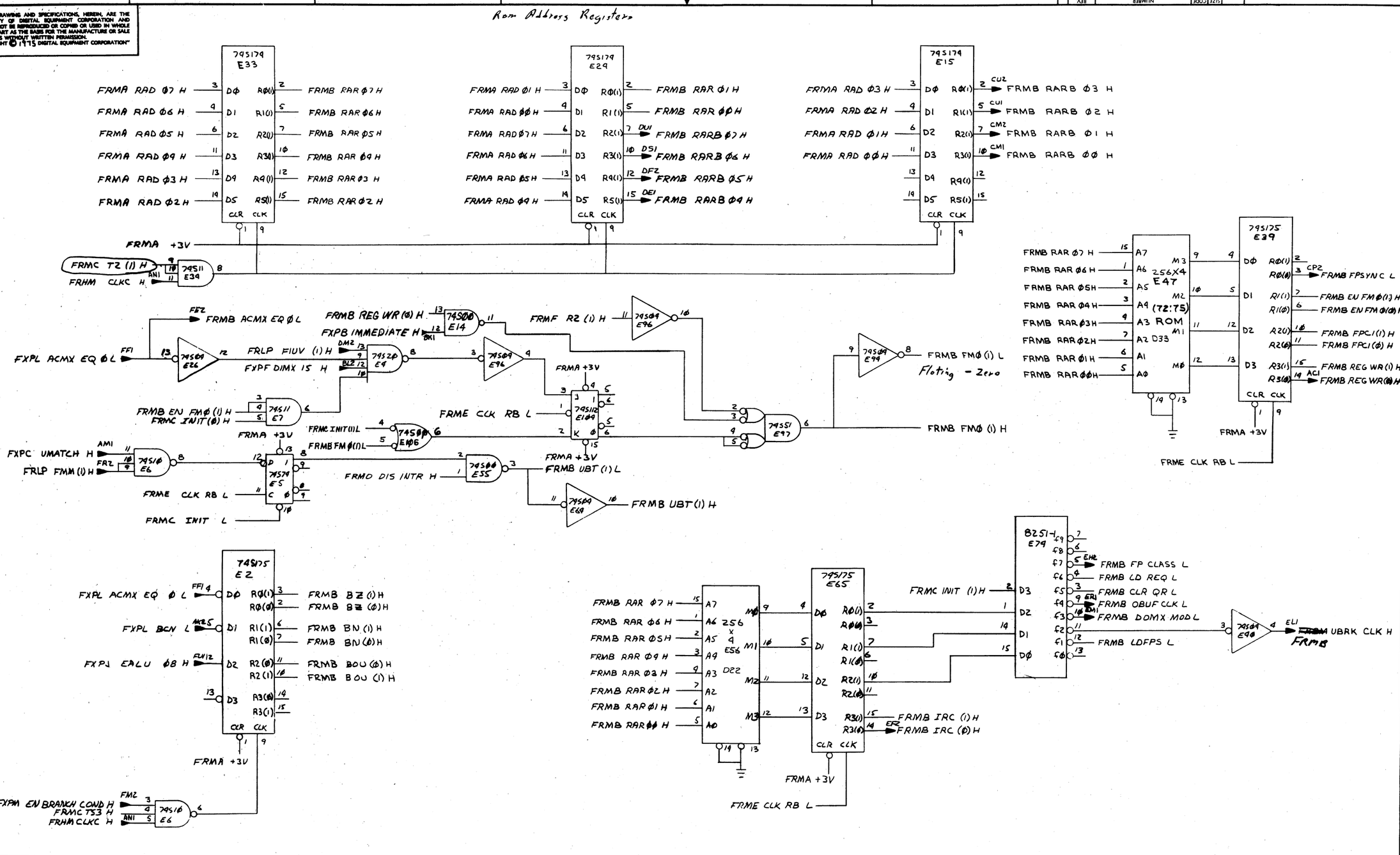

REVISIONS		
CHK	CHANGE NO.	REV.

(UTRAP + ROM ADDRESS (SLOT 4)

TITLE	SIZE	CODE	NUMBER	REV.
FP ROM CONTROL (FRMB)	D	CS	M8128-Ø-1	B
SCALE — / /	SHEET 3 OF 11	DIST.		

DEC FORM NO. DRD 138

"THIS DRAWING AND SPECIFICATIONS, HEREIN, ARE THE PROPERTY OF DIGITAL EQUIPMENT CORPORATION AND SHALL NOT BE REPRODUCED OR COPIED OR USED IN WHOLE OR IN PART AS THE BASIS FOR THE MANUFACTURE OR SALE OF ITEMS WITHOUT WRITTEN PERMISSION.
COPYRIGHT © 1975 DIGITAL EQUIPMENT CORPORATION"

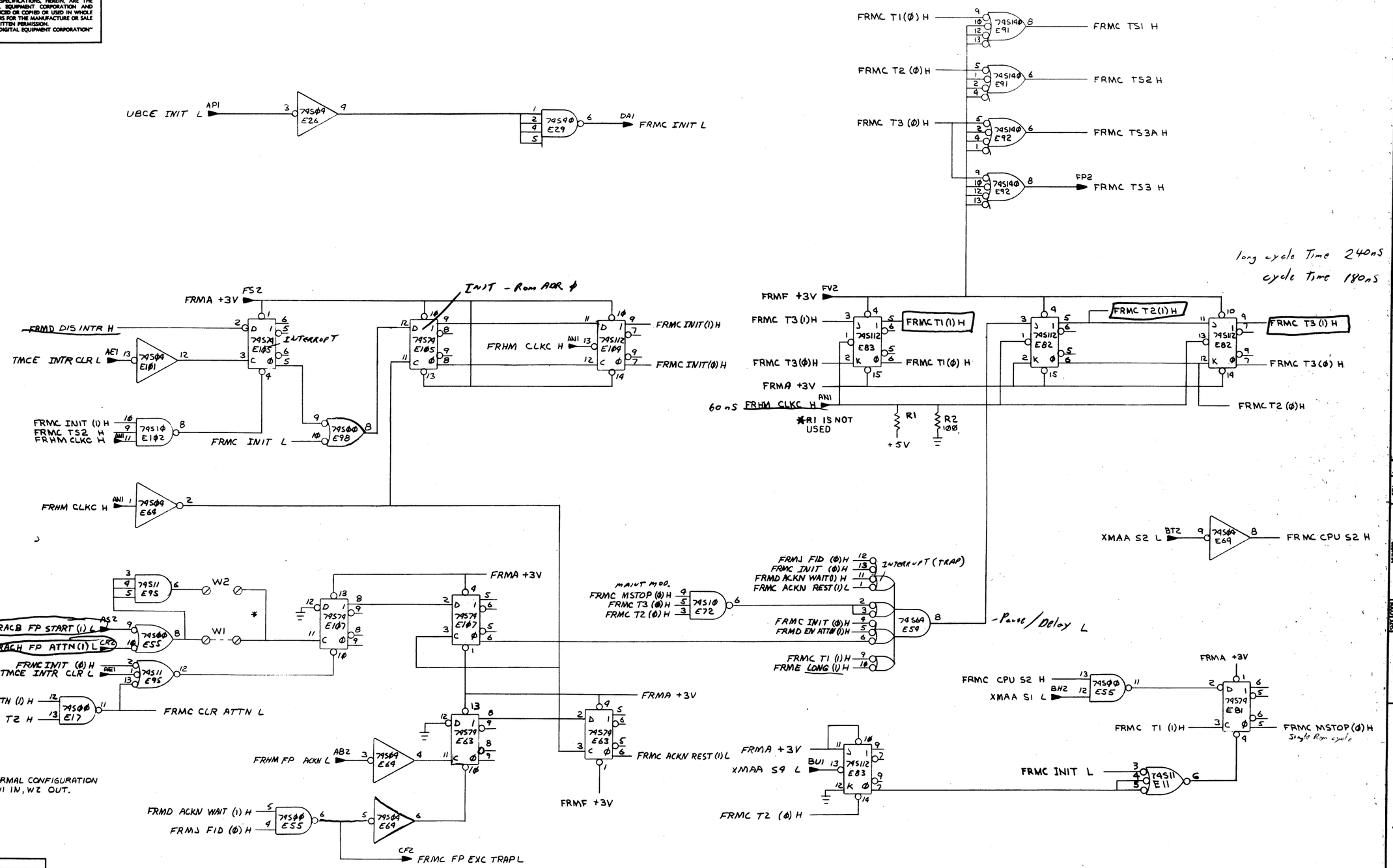

(TIMING AND SYNCRONIZER) (SLOT 4)

REVISIONS		
CHK	CHANGE NO.	REV.

TITLE	SIZE	CODE	NUMBER	REV.
FP ROM CONTROL (FRMC)	D	CS	M8128-Ø-1	B
SCALE —H—	SHEET 4 OF 11	DIST.		

DEC FORM NO. DRD 138

"THIS DRAWING AND SPECIFICATIONS, HEREIN, ARE THE PROPERTY OF DIGITAL EQUIPMENT CORPORATION AND SHALL NOT BE REPRODUCED OR COPIED OR USED IN WHOLE OR IN PART AS THE BASIS FOR THE MANUFACTURE OR SALE OF ITEMS WITHOUT WRITTEN PERMISSION.
COPYRIGHT © 1975 DIGITAL EQUIPMENT CORPORATION"

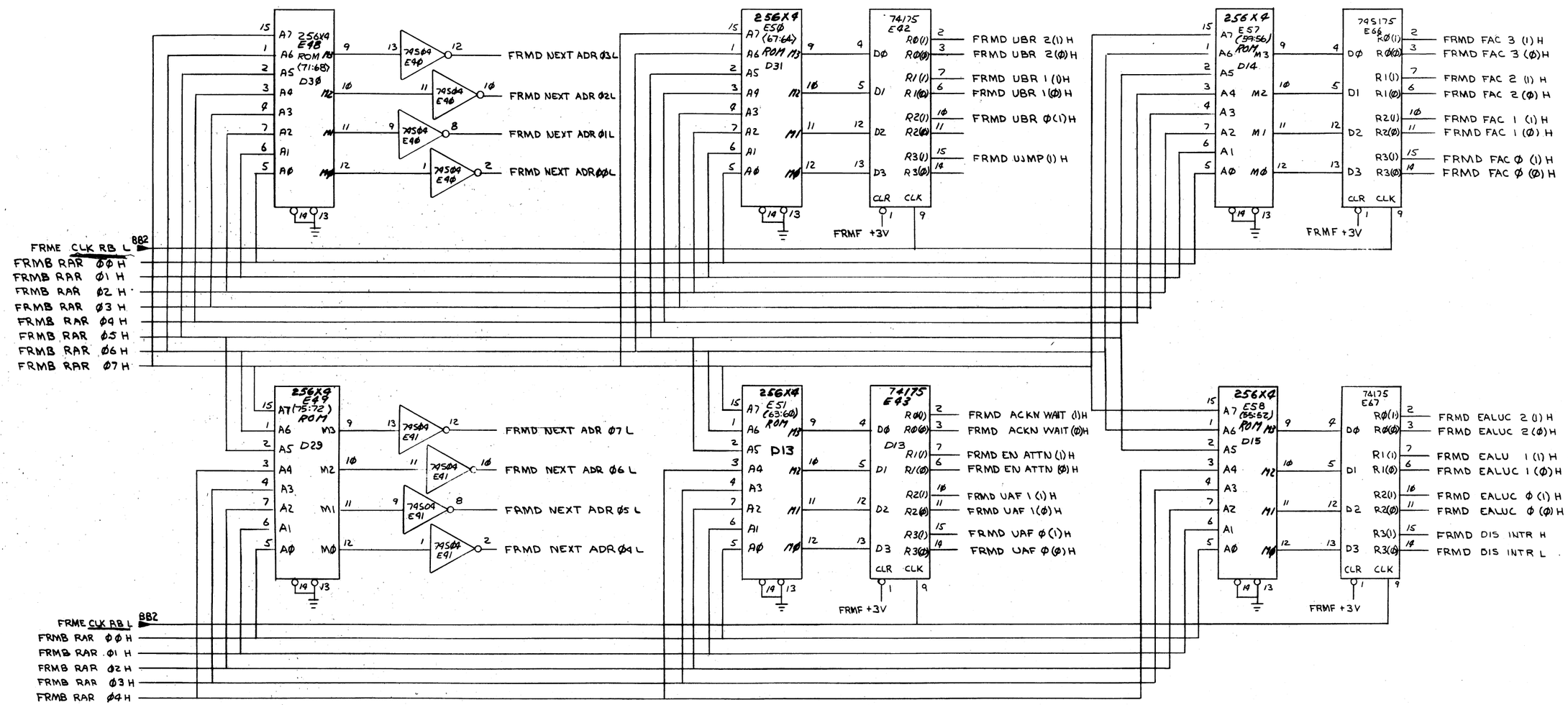

REVISIONS		
CHK	CHANGE NO.	REV.

(CONTROL ROM)(SLOT 4)

TITLE	SIZE	CODE	NUMBER	REV.
FP ROM CONTROL (FRMD)	D	CS	M8128-Ø-1	B
SCALE	SHEET 5 OF 11	DIST.		

DEC FORM NO. DRD 138

"THIS DRAWING AND SPECIFICATIONS, HEREIN, ARE THE PROPERTY OF DIGITAL EQUIPMENT CORPORATION AND SHALL NOT BE REPRODUCED OR COPIED OR USED IN WHOLE OR IN PART AS THE BASIS FOR THE MANUFACTURE OR SALE OF ITEMS WITHOUT WRITTEN PERMISSION.
COPYRIGHT © 1975 DIGITAL EQUIPMENT CORPORATION"

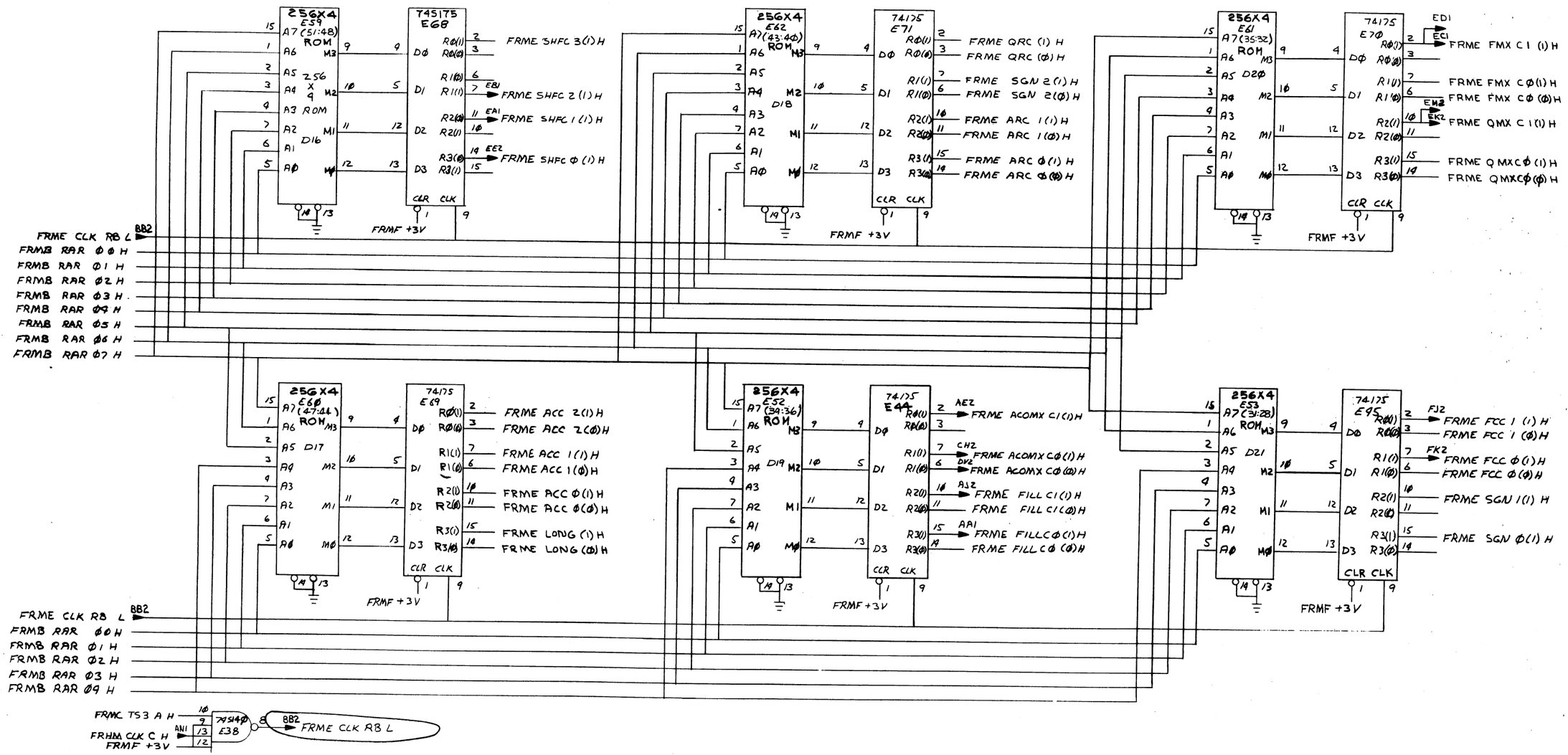

(CONTROL ROM (SLOT 4)

TITLE	SIZE	CODE	NUMBER	REV.
FP ROM CONTROL (FRME)	D	CS	M8128-Ø-1	B

SCALE — SHEET 6 OF 11 — DIST.

REVISIONS		
CHK	CHANGE NO.	REV.

DEC FORM NO. DRD 138

"THIS DRAWING AND SPECIFICATIONS, HEREIN, ARE THE PROPERTY OF DIGITAL EQUIPMENT CORPORATION AND SHALL NOT BE REPRODUCED OR COPIED OR USED IN WHOLE OR IN PART AS THE BASIS FOR THE MANUFACTURE OR SALE OF ITEMS WITHOUT WRITTEN PERMISSION. COPYRIGHT © 1975 DIGITAL EQUIPMENT CORPORATION"

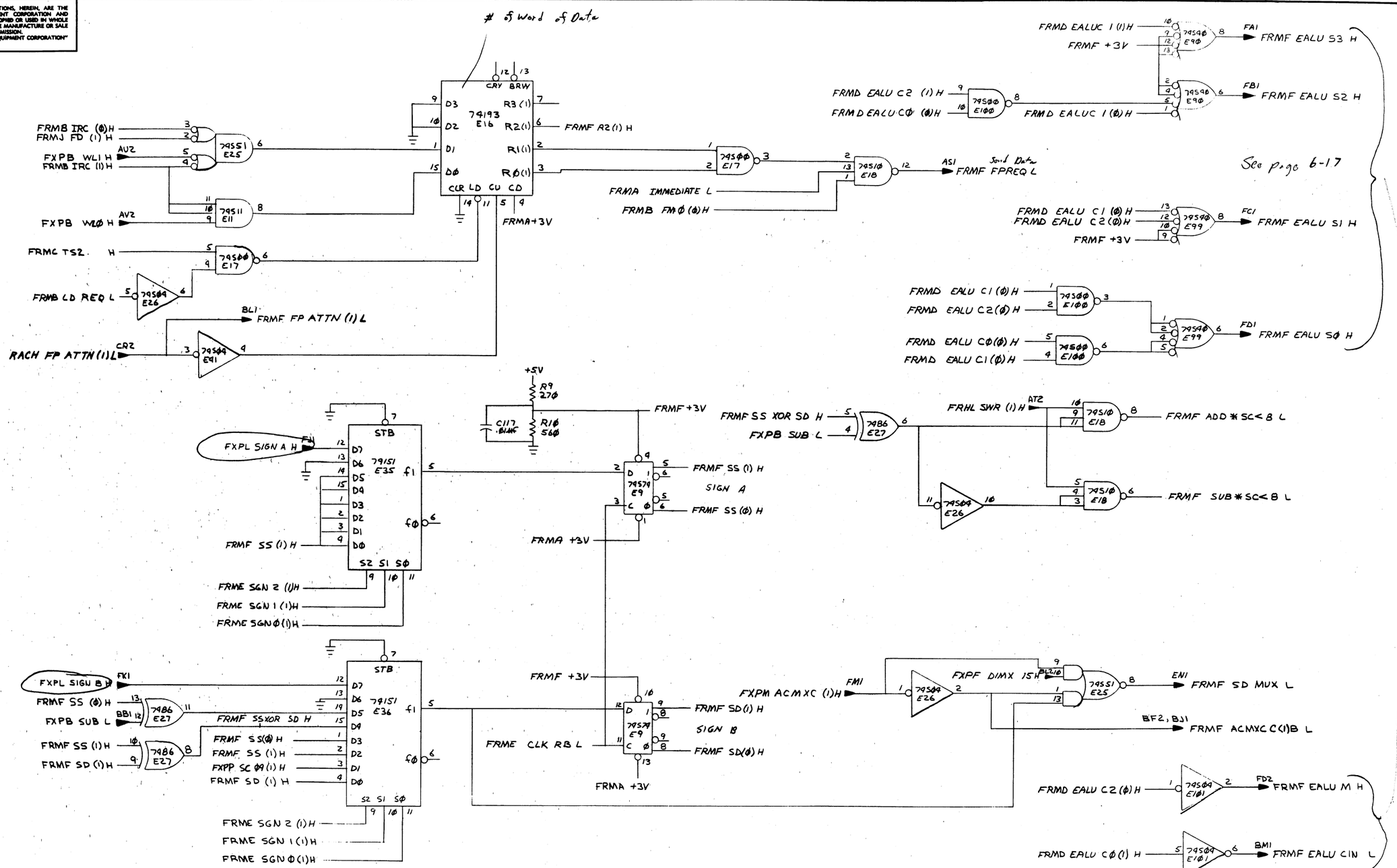

(SIGN CONTROL, EALU CONTROL)(SLOT 4)

REVISIONS		
CHK	CHANGE NO.	REV.

TITLE	SIZE	CODE	NUMBER	REV.
FP ROM CONTROL (FRMF)	D	CS	M8128-0-1	B
SCALE —	SHEET 7 OF 11	DIST.		

DEC FORM NO. DRD 128

"THIS DRAWING AND SPECIFICATIONS, HEREIN, ARE THE PROPERTY OF DIGITAL EQUIPMENT CORPORATION AND SHALL NOT BE REPRODUCED OR COPIED OR USED IN WHOLE OR IN PART AS THE BASIS FOR THE MANUFACTURE OR SALE OF ITEMS WITHOUT WRITTEN PERMISSION.
COPYRIGHT © 1975 DIGITAL EQUIPMENT CORPORATION"

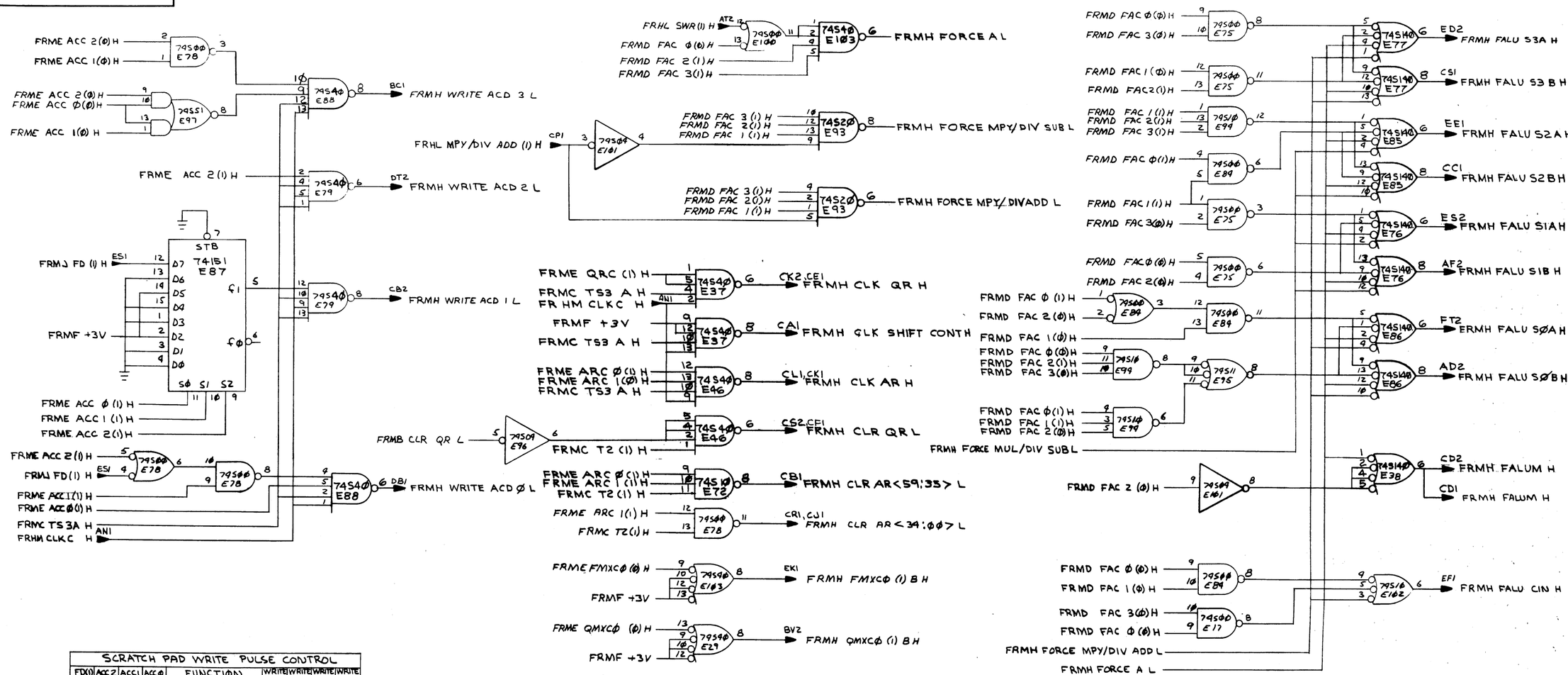

SCRATCH PAD WRITE PULSE CONTROL								
FD(1)	ACC 2	ACC1	ACCØ	FUNCTIØN	WRITE ACDØ	WRITE ACD1	WRITE ACD2	WRITE ACD 3
X	Ø	Ø	Ø	NOP	NO	NO	NO	NO
X	Ø	Ø	1	WRITE ACD Ø	YES	NO	NO	NO
X	Ø	1	Ø	WRITE ACD 1	NO	YES	NO	NO
X	Ø	1	1	WRITE ACD 3	NO	NO	NO	YES
X	1	Ø	Ø	WRITE ACD 2	NO	NO	YES	NO
X	1	Ø	1	WRITE ACD 3-Ø	YES	YES	YES	YES
X	1	1	Ø	WRITE ACD 3-2	NO	NO	YES	YES
Ø	1	1	1	WRITE ACD 3-Ø IF FD(1) ELSE ACD 3-2	NO	NO	YES	YES
1	1	1	1		YES	YES	YES	YES

FALU CONTROL												
MPY /DIV ADD	SWR	FAC3	FAC2	FAC1	FACØ	FUNCTIØN	S3	S2	S1	SØ	M	CIN
X	X	Ø	Ø	Ø	Ø	A ∧ B	1	Ø	1	1	1	1
X	X	Ø	Ø	Ø	1	~ A	Ø	Ø	Ø	Ø	1	Ø
X	X	Ø	Ø	1	Ø	B	1	Ø	1	Ø	1	Ø
X	X	Ø	Ø	1	1	A ∨ B	Ø	1	1	1	1	Ø
X	X	Ø	1	Ø	Ø	A PLUS B	1	Ø	Ø	1	1	1
X	X	Ø	1	Ø	1	A PLUS B PLUS 1	1	Ø	Ø	1	Ø	Ø
X	X	Ø	1	1	Ø	A MINUS 1	1	1	1	1	Ø	1
X	X	Ø	1	1	1	A MINUS B	Ø	1	1	Ø	Ø	Ø
X	X	1	Ø	Ø	Ø	Ø	Ø	Ø	1	1	1	1
X	X	1	Ø	Ø	1	~(A ∧ B)	Ø	1	Ø	Ø	1	Ø
X	X	1	Ø	1	Ø	~~A∨B~~ A ∨ B	1	1	1	Ø	1	Ø
X	X	1	Ø	1	1	~B	Ø	1	Ø	1	1	Ø
X	Ø	1	1	Ø	Ø	COND A	1	1	1	1	1	1
X	1	1	1	Ø	Ø	ADD A PLUS B	1	Ø	Ø	1	Ø	1
X	X	1	1	Ø	1	NOT USED						
Ø	Ø	1	1	1	Ø	MPY/DIV COND SUB A	1	1	1	1	1	1
Ø	1	1	1	1	Ø	A MINUS B	Ø	1	1	Ø	Ø	Ø
1	Ø	1	1	1	Ø	MPY/DIV COND ADD A	1	1	1	1	1	1
1	1	1	1	1	Ø	A PLUS B	1	Ø	Ø	1	Ø	1
X	X	1	1	1	1	A	1	1	1	1	1	1

REGISTER CLOCKS, FALU CONTROL (SLOT 4)

REVISIONS		
CHK	CHANGE NO.	REV.

TITLE	SIZE	CODE	NUMBER	REV.
FP ROM CONTROL (FRMH)	D	CS	M8128-Ø-1	B
SCALE —//—	SHEET 8 OF 11		DIST.	

DEC FORM NO. DRD 138

"THIS DRAWING AND SPECIFICATIONS, HEREIN, ARE THE PROPERTY OF DIGITAL EQUIPMENT CORPORATION AND SHALL NOT BE REPRODUCED OR COPIED OR USED IN WHOLE OR IN PART AS THE BASIS FOR THE MANUFACTURE OR SALE OF ITEMS WITHOUT WRITTEN PERMISSION. COPYRIGHT © 1975 DIGITAL EQUIPMENT CORPORATION"

NOTE:
SIGINAL NEW ORIGIN
FRMJ FP SYNC L FRMB FP SYNC L

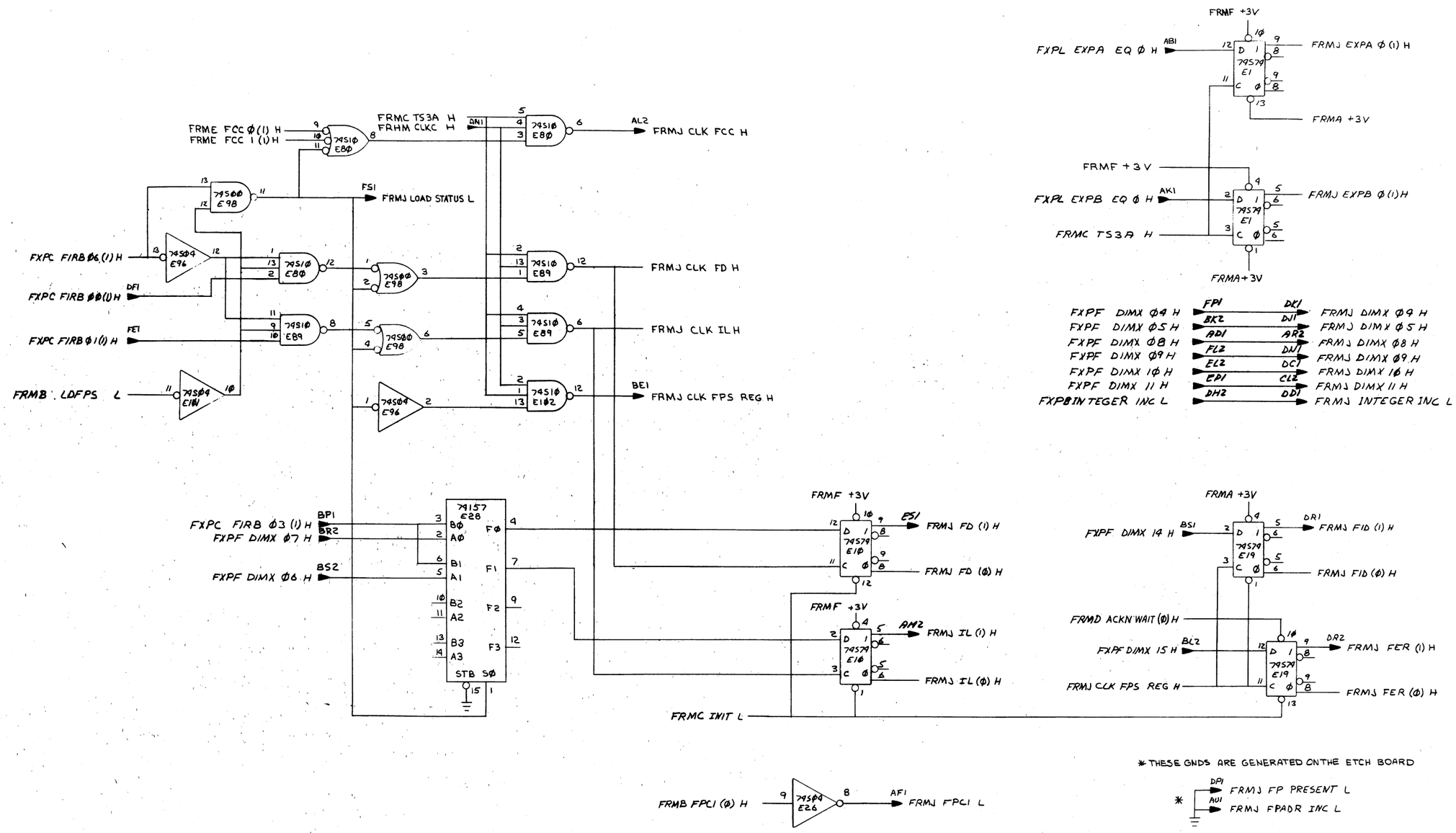

REVISIONS		
CHK	CHANGE NO.	REV.

(FPS CONTROL (SLOT 4)

TITLE	SIZE	CODE	NUMBER	REV.
FP ROM CONTROL (FRMJ)	D	CS	M8128 Ø 1	B
SCALE — //	SHEET 9 OF 11	DIST.		

DEC FORM NO. DRD 138

"THIS DRAWING AND SPECIFICATIONS, HEREIN, ARE THE PROPERTY OF DIGITAL EQUIPMENT CORPORATION AND SHALL NOT BE REPRODUCED OR COPIED OR USED IN WHOLE OR IN PART AS THE BASIS FOR THE MANUFACTURE OR SALE OF ITEMS WITHOUT WRITTEN PERMISSION.
COPYRIGHT © 1975 DIGITAL EQUIPMENT CORPORATION"

	NAD	UBR	UJP	AKW	ATW	UAF	FAC	EAC	DSI	SHC	ACC	LNG	ORC	SNM	ARC	ACO	FIL	FMX	QMX	FCC	SNL	MSC	IRC	SYN	FMB	FC1	RGW	AMX	BMX	DIM	SCC	ERC	ACF	ACX	CNT	PGE
000	003	0	0	0	0	0	00	0	1	07	0	0	0	0	0	0	0	0	0	3	0	0	0	0	0	0	0	0	0	0	0	0	0	0	000	02
001	006	0	0	0	0	0	00	5	1	07	2	0	0	0	0	0	0	1	0	3	0	0	0	0	0	0	0	0	1	2	0	0	7	1	014	02
002	006	0	0	0	0	0	00	5	1	07	2	0	0	0	0	0	0	1	0	3	0	0	0	0	0	0	0	0	1	2	0	0	7	1	016	02
003	000	1	0	0	1	3	10	5	0	07	5	1	0	1	0	0	0	1	0	3	2	6	1	0	0	0	0	1	1	0	0	0	6	0	000	01
004	246	7	0	0	0	0	02	0	1	13	0	0	0	1	1	0	0	1	0	3	0	0	0	0	0	0	0	3	1	0	0	1	0	0	234	13
005	332	0	0	0	0	0	00	3	1	00	0	0	0	0	0	0	0	0	0	3	0	0	0	0	0	0	0	1	1	0	1	0	0	0	001	12
006	003	0	0	1	0	0	00	0	1	07	4	0	0	0	0	0	0	1	0	3	0	0	0	0	0	0	0	0	0	1	0	0	7	1	000	02
007	341	0	0	0	0	0	17	4	1	07	7	0	0	0	0	0	0	1	0	3	0	0	0	0	0	0	0	3	1	0	1	0	1	0	000	12
010	260	0	0	0	0	0	00	5	1	07	0	0	0	1	0	0	0	0	0	3	3	0	0	0	0	0	0	0	0	0	0	1	6	1	000	01
011	130	4	0	0	1	0	00	0	0	07	3	0	0	0	0	0	0	0	0	3	0	0	0	1	1	0	0	1	1	0	0	0	6	1	000	03
012	132	4	0	0	1	0	00	0	0	07	3	0	0	0	0	0	0	0	0	0	0	0	0	1	1	0	0	1	1	0	0	0	6	1	000	03
013	203	0	0	0	0	0	00	0	0	07	0	0	0	1	0	3	0	0	0	3	3	4	0	1	0	0	0	0	0	0	0	0	3	0	000	04
014	004	3	0	0	0	1	16	3	1	01	0	1	1	0	1	0	0	2	3	3	0	0	0	0	0	0	0	3	3	0	0	1	4	0	000	13
015	010	0	0	0	1	0	00	5	0	07	3	0	0	0	0	0	0	0	0	3	0	0	0	1	0	0	0	1	2	0	1	0	6	1	000	01
016	003	0	0	0	0	0	17	4	1	07	7	0	0	0	0	0	0	1	0	3	0	0	0	0	0	0	0	3	1	0	0	0	3	0	000	02
017	220	4	0	0	1	0	00	0	0	07	3	0	0	0	0	0	0	0	0	0	0	0	0	1	1	0	0	1	1	0	0	0	6	1	000	04
020	140	4	0	0	1	0	00	0	0	07	3	0	0	0	0	0	0	0	0	3	0	0	0	1	1	0	0	1	1	0	0	0	6	1	000	03
021	142	4	0	0	1	0	00	0	0	07	3	0	0	0	0	0	0	0	0	0	0	0	0	1	1	0	0	1	1	0	0	0	6	1	000	03
022	003	0	0	0	1	0	00	0	0	07	0	0	0	0	0	0	0	0	0	3	0	1	0	1	0	0	0	0	0	0	0	0	0	0	000	03
023	003	0	0	0	0	0	00	0	0	07	0	0	0	0	0	0	0	0	0	3	0	3	0	0	0	0	1	0	0	0	0	0	0	0	000	01
024	175	0	0	0	0	0	00	0	0	07	0	0	0	0	0	1	0	0	0	3	0	4	0	1	0	0	0	0	0	0	0	0	7	0	000	04
025	211	0	0	0	0	0	00	5	0	07	0	0	0	1	0	3	0	0	0	0	3	4	0	1	0	0	0	0	0	0	0	0	6	0	000	04
026	152	0	0	0	1	0	00	0	0	07	0	0	0	0	0	0	0	0	0	0	0	0	0	1	1	0	0	0	0	0	0	0	0	1	000	04
027	217	0	0	0	1	0	00	0	0	07	3	0	0	0	0	0	0	0	0	3	0	7	0	1	1	0	1	1	1	0	0	0	6	1	000	04
030	000	1	0	0	1	3	00	3	0	07	0	0	0	1	0	0	0	0	0	3	3	0	0	1	0	0	0	0	0	0	1	0	5	0	000	01
031	211	0	0	0	0	0	00	5	0	07	0	0	0	1	0	2	0	0	0	0	2	4	0	1	0	0	1	0	1	0	0	0	6	0	000	04
032	006	0	0	0	1	0	00	5	0	07	2	0	0	0	0	0	0	1	0	3	0	0	0	1	0	0	0	0	1	2	0	0	7	1	002	09
033	003	0	0	0	0	0	00	0	1	07	0	0	0	0	0	0	0	0	0	3	0	1	0	0	0	0	0	0	0	0	0	0	0	0	000	02
034	003	0	0	0	0	0	00	0	1	07	0	0	0	0	0	0	0	0	0	3	0	2	0	0	0	0	0	0	0	0	0	0	0	0	000	02
035	166	7	0	0	0	0	00	0	0	07	0	0	0	0	0	0	0	0	0	3	0	0	0	0	0	0	0	0	0	0	0	0	0	0	000	09
036	003	0	0	0	0	0	17	4	1	07	5	0	0	0	0	0	0	1	0	3	0	0	0	0	0	0	0	3	1	0	0	0	3	0	000	02
037	163	0	0	0	0	0	00	5	1	00	0	0	0	0	0	0	0	0	0	3	0	0	0	0	0	0	0	0	2	0	0	0	0	0	000	02
040	174	0	0	0	0	0	00	0	1	07	4	0	0	0	0	0	0	1	0	3	0	0	0	0	0	0	0	0	0	0	0	0	6	1	000	02
041	164	7	0	0	1	1	00	0	0	07	4	0	0	0	0	0	0	1	0	3	0	0	0	1	0	0	0	0	0	0	0	0	6	1	000	04
042	016	0	0	0	0	0	02	4	1	07	0	0	0	1	1	0	0	0	0	0	3	0	0	0	0	0	0	0	1	0	0	1	4	0	000	02
043	262	0	0	0	0	0	02	5	1	07	0	0	0	1	1	0	0	0	0	3	3	0	0	0	0	0	0	0	0	0	0	1	3	0	000	02
044	000	1	0	0	0	3	02	5	0	07	0	0	0	1	1	0	0	0	0	3	3	0	0	0	0	0	0	0	0	0	0	1	3	0	000	09
045	010	0	0	0	0	0	00	5	1	07	3	0	0	0	0	0	0	0	0	3	0	0	0	0	0	0	0	1	2	0	1	0	6	1	000	02
046	136	7	0	0	0	0	02	5	1	07	0	0	0	1	1	0	0	0	0	3	3	0	0	0	0	0	0	0	0	0	0	1	4	0	000	07
047	046	0	0	0	1	0	00	0	0	07	2	0	0	0	0	0	0	1	0	3	0	0	0	0	0	0	0	0	0	0	0	0	6	1	000	04
050	064	0	0	0	0	0	00	3	0	07	0	0	0	0	0	0	0	0	0	3	0	0	0	0	0	0	0	0	1	0	1	0	3	0	200	01
051	370	5	0	0	0	1	02	3	0	07	0	0	0	1	1	0	0	2	0	3	3	5	0	0	0	0	0	0	1	0	0	1	3	0	201	06
052	006	0	0	0	0	0	00	5	1	07	2	0	0	0	0	0	0	1	0	3	0	0	0	0	0	0	0	0	1	2	0	0	7	1	002	02
053	003	0	0	0	0	0	02	4	1	07	5	0	0	0	0	0	0	1	0	3	0	0	0	0	0	0	0	3	1	0	0	0	3	0	000	02

	NAD	UBR	UJP	AKW	ATW	UAF	FAC	EAC	DSI	SHC	ACC	LNG	ORC	SNM	ARC	ACO	FIL	FMX	QMX	FCC	SNL	MSC	IRC	SYN	FMB	FC1	RGW	AMX	BMX	DIM	SCC	ERC	ACF	ACX	CNT	PGE
054	126	0	0	0	0	0	00	0	0	07	0	0	0	0	0	1	0	0	0	3	0	4	0	1	0	0	1	0	0	0	0	0	7	0	000	02
055	003	0	0	0	0	0	10	5	1	07	7	0	0	1	0	0	0	1	0	0	2	0	0	0	0	0	0	1	1	0	0	0	4	0	000	02
056	003	0	0	0	0	0	00	4	1	07	0	0	0	1	0	0	0	0	0	0	3	0	0	0	0	0	0	0	1	0	0	0	4	0	000	02
057	124	4	0	0	0	1	02	4	1	07	0	0	0	1	1	0	0	0	0	3	3	0	0	0	0	0	0	0	1	0	0	1	4	0	000	02
060	003	0	0	0	0	0	00	0	1	07	0	0	0	0	0	0	0	0	0	3	0	1	0	0	0	0	0	0	0	0	0	0	0	0	000	02
061	340	6	0	0	0	1	00	0	1	07	0	0	1	[illegible]	[illegible]	[illegible]	0	0	2	3	3	0	0	0	0	0	0	0	0	0	0	1	5	0	000	11
062	023	0	0	0	1	0	00	0	0	07	0	0	0	0	0	0	0	0	0	3	0	3	0	1	0	1	1	0	0	0	0	0	0	0	000	21
063	152	0	0	0	1	0	00	0	0	07	0	0	0	0	0	0	0	0	0	3	0	0	0	1	0	1	1	0	0	0	0	0	0	0	000	01
064	147	0	0	0	0	0	00	4	0	07	4	0	0	0	0	0	0	1	0	3	0	0	0	0	0	0	0	2	1	2	0	0	6	1	000	01
065	240	6	0	0	0	1	02	4	1	04	0	0	0	1	1	0	0	2	0	3	3	0	0	0	0	0	0	1	0	0	0	1	2	0	000	10
066	215	0	0	0	1	0	00	0	0	07	0	0	0	0	0	0	0	0	0	3	0	0	0	0	0	1	0	0	0	0	0	0	0	0	000	05
067	320	6	0	0	0	1	00	3	1	07	0	0	1	0	0	0	0	0	2	3	0	0	0	0	0	0	0	0	0	0	1	0	2	0	000	08
070	171	6	0	0	0	2	00	5	1	07	0	0	0	0	0	0	0	0	0	3	0	0	0	0	0	0	0	0	1	0	1	0	0	0	000	14
071	205	7	0	0	0	2	00	0	1	07	0	0	0	0	0	0	0	0	0	3	0	0	0	0	0	0	0	0	0	0	0	0	0	0	000	14
072	313	3	0	0	0	1	14	3	1	03	0	0	0	1	1	0	0	3	0	3	0	0	0	0	0	0	0	3	3	0	0	1	0	0	000	11
073	342	6	0	0	0	1	02	4	1	07	0	0	0	1	1	0	0	2	0	3	3	5	0	0	0	0	0	2	0	0	0	1	2	0	002	13
074	261	5	0	0	0	2	06	0	1	17	0	1	0	0	1	0	0	0	0	3	0	5	0	0	0	0	0	0	0	0	0	0	0	0	000	10
075	313	3	0	0	0	1	14	3	1	03	0	0	0	0	1	0	0	3	0	3	0	0	0	0	0	0	0	3	3	0	0	1	0	0	000	10
076	266	0	0	0	0	0	17	3	1	07	0	0	0	1	1	0	0	0	0	3	0	0	0	0	0	0	0	3	3	0	0	1	0	0	000	12
077	000	0	0	0	0	0	00	0	0	00	0	0	0	0	0	0	0	0	0	0	0	0	0	0	0	0	0	0	0	0	0	0	0	0	000	00
100	225	5	0	0	0	1	00	3	1	04	0	0	1	0	0	0	0	0	1	3	0	0	0	0	0	0	0	3	3	0	0	1	0	0	000	10
101	373	0	0	0	0	0	00	0	0	07	0	0	0	0	0	0	0	0	0	3	0	0	0	0	0	0	0	0	0	0	0	0	0	0	000	06
102	242	0	0	0	0	0	00	1	1	07	0	0	0	0	0	0	0	0	0	1	0	0	0	0	0	0	0	3	1	0	0	0	0	0	377	12
103	345	0	0	0	0	0	04	0	0	07	5	0	0	0	0	0	0	3	0	3	0	0	0	0	0	0	0	1	1	0	0	0	6	0	000	06
104	172	0	0	0	0	0	06	0	1	07	0	0	0	0	1	0	0	0	0	3	0	5	0	0	0	0	0	0	0	0	0	0	0	0	000	12
105	006	0	0	0	0	0	00	5	1	07	2	0	0	0	0	0	0	1	0	3	0	0	0	0	0	0	0	0	1	2	0	0	7	1	010	12
106	003	0	0	0	0	0	10	5	1	07	7	0	0	1	0	0	0	1	0	0	2	0	0	0	0	0	0	1	1	0	0	0	4	0	000	02
107	003	0	0	0	0	0	10	5	1	07	7	0	0	1	0	0	0	1	0	3	2	0	0	0	0	0	0	1	1	0	0	1	1	0	000	12
110	072	4	0	0	0	1	17	3	1	13	0	0	0	1	0	0	0	0	0	3	3	0	0	0	0	0	0	3	1	0	0	1	2	0	201	11
111	072	4	0	0	0	1	17	3	1	13	0	0	0	1	0	0	0	0	0	3	3	0	0	0	0	0	0	3	1	0	0	1	2	0	200	11
112	110	2	0	0	0	3	16	3	1	02	0	0	1	0	1	0	3	2	1	3	0	0	0	0	0	0	0	2	3	0	1	0	3	0	000	11
113	110	2	0	0	0	3	16	3	1	02	0	0	1	0	1	0	3	2	1	3	0	0	0	0	0	0	0	2	3	0	1	0	3	0	000	11
114	110	2	0	0	0	3	16	3	1	02	0	0	1	0	1	0	3	2	1	3	0	0	0	0	0	0	0	2	3	0	1	0	3	0	000	11
115	110	2	0	0	0	3	16	3	1	02	0	0	1	0	1	0	3	2	1	3	0	0	0	0	0	0	0	2	3	0	1	0	3	0	000	11
116	110	2	0	0	0	3	16	3	1	02	0	0	1	0	1	0	3	2	1	3	0	0	0	0	0	0	0	2	3	0	1	0	3	0	000	11
117	110	2	0	0	0	3	16	3	1	02	0	0	1	0	1	0	3	2	1	3	0	0	0	0	0	0	0	2	3	0	1	0	3	0	000	11
120	123	0	0	0	0	0	10	5	0	07	5	0	0	1	0	0	0	1	0	0	2	0	0	0	0	0	0	1	1	0	0	0	4	0	000	09
121	300	0	0	0	0	0	17	3	0	07	6	0	0	0	1	0	0	1	0	1	0	0	0	0	0	0	0	3	3	0	0	1	4	0	000	09
122	123	0	0	0	0	0	10	5	0	07	7	0	0	1	0	0	0	1	0	0	2	0	0	0	0	0	0	1	1	0	0	0	4	0	000	09
123	153	7	0	0	0	1	00	0	0	07	0	0	0	0	0	3	0	0	0	3	0	4	0	1	0	0	0	0	0	0	0	0	6	0	000	05
124	106	3	1	0	0	0	17	4	1	07	6	0	0	1	0	0	0	1	0	0	2	0	0	0	0	0	0	3	1	0	0	0	4	0	000	02
125	153	7	0	0	0	1	00	0	0	07	0	0	0	0	0	3	0	0	0	3	0	4	0	1	0	0	0	0	0	0	0	0	6	0	000	09
126	003	0	0	0	1	0	00	0	0	07	0	0	0	0	0	0	0	0	0	3	0	0	0	0	0	0	1	0	0	0	0	0	0	0	000	02
127	153	7	0	0	0	1	10	1	0	07	6	0	0	1	0	0	0	1	0	1	2	0	0	0	0	0	0	2	1	0	0	0	4	0	377	09

	NAD	UBR	UJP	AKW	ATW	UAF	FAC	EAC	DSI	SHC	ACC	LNG	ORC	SNM	ARC	ACO	FIL	FMX	QMX	FCC	SNL	MSC	IRC	SYN	FMB	FC1	RGW	AMX	BMX	DIM	SCC	ERC	ACF	ACX	CNT	PGE
130	000	1	0	0	1	3	00	3	0	07	4	0	0	1	0	0	0	0	0	3	3	0	0	0	0	0	0	0	0	0	1	0	5	1	000	03
131	000	1	0	0	0	3	00	3	1	07	0	0	0	1	0	0	0	0	0	3	3	0	0	0	0	0	0	0	0	0	1	0	5	0	000	03
132	042	0	0	0	1	0	00	0	0	07	4	0	0	0	0	0	0	1	0	3	0	0	0	0	0	0	0	0	0	0	0	0	6	1	000	03
133	016	0	0	0	0	0	02	5	1	07	0	0	0	1	1	0	0	2	0	0	3	0	0	0	0	0	0	0	0	0	0	1	6	0	000	03
134	106	3	1	0	0	0	17	4	1	07	6	0	0	0	0	0	0	1	0	0	3	0	0	0	0	0	0	3	1	0	0	0	4	0	000	02
135	003	0	0	0	0	0	00	5	1	07	0	0	0	1	0	0	0	0	0	0	2	0	0	0	0	0	0	0	1	0	0	0	0	0	000	08
136	276	3	1	0	0	0	17	4	1	07	5	1	0	0	2	0	0	1	0	0	0	0	0	0	0	0	0	3	1	0	0	0	3	0	000	07
137	230	3	0	0	0	0	04	0	1	03	0	0	0	0	1	0	0	3	0	3	0	0	0	0	0	0	0	0	0	0	0	0	0	0	000	07
140	270	0	0	0	1	0	00	0	0	07	4	0	0	0	0	0	0	1	0	3	0	0	0	0	0	0	0	0	0	0	0	0	6	1	000	03
141	000	1	0	0	0	3	00	3	1	07	0	0	0	1	0	0	0	0	0	3	3	0	0	0	0	0	0	0	0	0	1	0	5	0	000	03
142	165	0	0	0	1	0	00	0	0	07	4	0	0	0	0	0	0	1	0	3	0	0	0	0	0	0	0	0	0	0	0	0	6	1	000	03
143	016	0	0	0	0	0	02	5	1	07	0	0	0	1	1	0	0	2	0	0	3	0	0	0	0	0	0	0	0	0	0	1	6	0	000	03
144	154	7	0	0	1	0	00	0	0	07	0	0	0	0	0	1	0	0	0	3	0	0	0	0	0	1	0	0	0	0	0	0	6	0	000	05
145	171	6	1	0	0	2	00	0	1	07	0	0	0	0	0	0	0	0	0	3	0	0	0	0	0	0	0	0	0	0	0	0	0	0	000	05
146	006	0	0	0	0	0	00	5	1	07	2	0	0	0	0	0	0	1	0	3	0	0	0	0	0	0	0	0	1	2	0	0	7	1	006	05
147	063	0	0	0	0	0	00	4	0	07	0	0	0	0	0	2	0	0	0	0	1	4	0	0	0	0	0	2	1	0	0	0	6	0	000	01
150	000	1	0	0	1	3	00	3	0	07	1	0	0	1	0	0	0	1	0	3	3	0	0	0	0	0	0	0	0	0	1	0	5	1	000	03
151	357	0	0	0	0	0	00	0	0	07	0	0	1	0	0	0	1	0	1	3	0	0	0	0	0	0	0	0	0	0	0	0	0	0	000	06
152	003	0	0	0	0	0	00	0	1	07	0	0	0	0	0	0	0	0	0	3	0	0	0	0	0	0	0	0	0	0	0	0	0	0	000	04
153	144	4	0	0	1	0	00	0	0	07	0	0	0	0	0	2	0	0	0	3	0	0	0	0	0	1	0	0	0	0	0	0	6	0	000	05
154	171	6	1	0	0	2	00	0	1	07	0	0	0	0	0	0	0	0	0	3	0	0	0	0	0	0	0	0	0	0	0	0	0	0	000	05
155	156	0	0	0	1	0	00	0	0	07	0	0	0	0	0	0	0	0	0	3	0	0	0	0	0	1	0	0	0	0	0	0	6	0	000	05
156	171	6	1	0	1	2	00	0	0	07	0	0	0	0	0	0	0	0	0	3	0	0	0	0	0	1	0	0	0	0	0	0	0	0	000	05
157	171	6	1	0	1	2	00	0	0	07	0	0	0	0	0	0	0	0	0	3	0	0	0	0	0	0	0	0	0	0	0	0	0	0	000	05
160	160	5	1	0	0	2	00	0	1	07	0	0	0	0	0	0	0	0	0	3	0	0	0	0	0	0	0	0	0	0	0	0	0	0	000	14
161	160	5	1	0	0	2	00	0	1	07	0	0	0	0	0	0	0	0	0	3	0	0	0	0	0	0	0	0	0	0	0	0	0	0	000	14
162	241	3	0	0	0	2	00	0	1	07	0	0	0	0	0	0	0	0	0	3	0	0	0	0	0	0	0	3	1	0	1	0	0	0	001	14
163	003	0	0	0	0	0	17	0	1	07	0	0	1	0	1	0	0	0	1	3	0	0	0	0	0	0	0	0	0	0	0	0	0	0	000	02
164	174	0	0	0	1	0	00	0	0	07	2	0	0	0	0	0	0	1	0	3	0	0	0	0	0	0	0	0	0	0	0	0	6	1	000	04
165	201	0	0	0	1	0	00	0	0	07	2	0	0	0	0	0	0	1	0	3	0	0	0	0	0	0	0	0	0	0	0	0	6	1	000	03
166	120	3	0	0	0	0	04	0	0	03	0	0	0	0	1	0	0	3	0	0	0	0	0	0	0	0	0	0	0	0	0	0	0	0	000	09
167	122	3	0	0	0	0	17	4	0	07	5	1	0	0	2	0	0	1	0	0	0	0	0	0	0	0	0	3	1	0	0	0	4	0	000	09
170	104	0	0	0	0	0	03	0	1	07	0	0	0	0	1	0	0	1	0	3	0	0	0	0	0	0	0	0	0	0	0	0	0	0	000	12
171	006	0	0	0	0	0	00	5	1	07	2	0	0	0	0	0	0	1	0	3	0	0	0	0	0	0	0	0	1	2	0	0	7	1	010	14
172	341	5	0	0	0	2	05	4	1	03	0	0	0	0	1	0	0	1	0	3	0	0	0	0	0	0	0	3	0	0	0	1	0	0	000	12
173	003	0	0	0	0	0	10	1	1	07	7	0	0	1	0	0	0	1	0	1	2	0	0	0	0	0	0	2	1	0	0	0	3	0	377	14
174	213	0	0	0	0	0	02	5	1	00	0	0	0	1	1	0	0	0	0	3	2	5	0	0	0	0	0	0	1	0	0	0	6	0	007	07
175	212	4	1	0	1	0	00	0	0	07	0	0	0	0	0	2	0	0	0	3	0	0	0	0	0	1	0	0	0	0	0	0	7	0	000	04
176	031	0	0	0	0	0	00	0	0	07	0	0	0	0	0	0	0	0	0	3	0	6	0	0	0	0	1	0	0	0	0	0	0	0	000	04
177	212	0	0	0	0	0	00	0	0	07	0	0	0	0	0	3	0	0	0	3	0	4	0	1	0	0	0	0	0	0	0	0	6	0	000	04
200	066	0	0	0	1	0	00	0	0	07	0	0	0	0	0	1	0	0	0	3	0	0	0	1	0	1	0	0	0	0	0	0	6	0	000	05
201	042	0	0	0	1	0	00	0	0	07	1	0	0	0	0	0	0	1	0	3	0	0	0	0	0	0	0	0	0	0	0	0	6	1	000	03
202	206	7	1	0	1	0	00	0	0	07	0	0	0	0	0	1	0	0	0	3	0	0	0	0	0	1	0	0	0	0	0	0	3	0	000	04
203	202	4	1	0	1	0	00	0	0	07	0	0	0	0	0	2	0	0	0	3	0	0	0	0	0	1	0	0	0	0	0	0	3	0	000	04

REVISIONS

CHK	CHANGE NO.	REV.

TITLE: FP ROM CONTROL

SIZE: D | CODE: CS | NUMBER: M8128-0-1 | REV.: B

SCALE: — | SHEET 10 OF 11 | DIST.

"THIS DRAWING AND SPECIFICATIONS, HEREIN, ARE THE PROPERTY OF DIGITAL EQUIPMENT CORPORATION AND SHALL NOT BE REPRODUCED OR COPIED OR USED IN WHOLE OR IN PART AS THE BASIS FOR THE MANUFACTURE OR SALE OF ITEMS WITHOUT WRITTEN PERMISSION.
COPYRIGHT © 1975 DIGITAL EQUIPMENT CORPORATION"

	NAD	UBR	UJP	AKW	ATW	UAF	FAC	EAC	DSI	SHC	ACC	LNG	QRC	SNM	ARC	ACO	FIL	FMX	QMX	FCC	SNL	MSC	IRC	SYN	FM0	FC1	RGW	AMX	BMX	DIM	SCC	ERC	ACF	ACX	CNT	PGE
204	146	6	1	0	1	0	00	0	0	07	0	0	0	0	0	0	0	0	0	3	0	0	0	1	0	0	1	0	0	0	0	0	0	0	000	05
205	006	0	0	0	0	0	00	5	1	07	2	0	0	0	0	0	0	1	0	3	0	0	0	0	0	0	0	0	1	2	0	0	7	1	012	14
206	212	0	0	0	1	0	00	0	0	07	0	0	0	0	0	0	0	0	0	3	0	0	0	0	0	1	0	0	0	0	0	0	3	0	000	04
207	003	0	0	0	0	0	10	5	1	07	7	0	0	1	0	0	0	1	0	0	2	0	0	0	0	0	0	1	1	0	0	0	3	0	000	14
210	215	0	0	0	1	0	00	0	0	07	0	0	0	0	0	0	0	0	0	3	0	0	0	1	0	1	0	0	0	0	0	0	0	0	000	05
211	216	4	1	0	1	0	00	0	0	07	0	0	0	0	0	2	0	0	0	3	0	0	0	0	0	1	0	0	0	0	0	0	6	0	000	04
212	003	0	0	0	1	0	00	0	0	07	0	0	0	0	0	0	0	0	0	3	0	0	0	0	0	1	0	0	0	0	0	0	0	0	000	04
213	310	5	0	0	0	1	17	5	1	00	0	0	0	0	1	0	0	0	0	3	0	0	0	0	0	0	0	0	1	0	0	0	0	0	002	07
214	146	6	1	0	1	0	00	0	0	07	0	0	0	0	0	0	0	0	0	3	0	0	0	1	0	0	1	0	0	0	0	0	0	0	000	05
215	146	6	1	0	0	0	00	0	1	07	0	0	0	0	0	0	0	0	0	3	0	0	0	0	0	0	0	0	0	0	0	0	0	0	000	05
216	222	7	1	0	1	0	00	0	0	07	0	0	0	0	0	1	0	0	0	3	0	0	0	0	0	1	0	0	0	0	0	0	6	0	000	04
217	224	4	0	0	0	1	02	5	0	07	0	0	0	1	1	0	0	0	0	3	3	0	0	0	0	0	1	0	0	0	0	1	6	0	000	04
220	046	7	0	0	1	0	00	0	0	07	4	0	0	0	0	0	0	1	0	3	0	0	0	0	0	0	0	0	0	0	0	0	6	1	000	04
221	136	7	0	0	0	0	02	5	1	07	0	0	0	1	1	0	0	0	0	3	3	0	0	0	0	0	0	0	0	0	0	1	4	0	000	04
222	212	0	0	0	1	0	00	0	0	07	0	0	0	0	0	0	0	0	0	3	0	0	0	0	0	1	0	0	0	0	0	0	6	0	000	04
223	223	0	0	0	0	0	00	0	1	00	0	0	0	0	0	0	0	0	0	0	0	0	0	0	0	0	0	0	0	0	0	0	0	0	000	00
224	176	3	0	0	0	0	17	4	0	07	6	0	0	1	0	0	0	1	0	0	2	0	0	0	0	0	1	3	1	0	0	0	6	0	000	04
225	261	2	0	0	0	3	00	4	1	04	0	0	0	0	0	0	0	0	0	3	0	0	0	0	0	0	0	3	0	0	0	0	0	0	000	10
226	205	7	0	0	0	2	17	4	1	07	3	0	0	0	0	0	0	1	0	0	0	0	0	0	0	0	0	2	1	0	0	0	3	0	000	01
227	236	3	0	0	0	0	17	4	1	07	3	0	0	0	0	0	0	1	0	0	0	0	0	0	0	0	0	2	1	0	0	0	3	0	000	01
230	003	0	0	0	0	0	10	5	1	07	7	0	0	1	0	0	0	1	0	0	2	0	0	0	0	0	0	1	1	0	0	0	3	0	000	07
231	160	5	1	0	0	2	17	3	1	07	7	0	0	0	1	0	0	1	0	1	0	0	0	0	0	0	0	3	3	0	0	1	3	0	000	07
232	233	0	0	0	0	0	00	0	1	07	0	0	0	0	0	0	0	0	0	3	0	0	0	0	0	0	0	2	1	0	1	0	0	0	040	11
233	112	0	0	0	0	0	00	3	1	02	0	0	0	0	0	0	0	2	0	3	0	0	0	0	0	0	0	1	3	0	1	0	3	0	000	11
234	176	3	0	0	0	0	17	4	0	07	6	0	0	0	0	0	0	1	0	0	3	0	0	0	0	0	1	3	1	0	0	0	6	0	000	04
235	003	0	0	0	0	0	00	5	1	07	0	0	0	0	0	0	0	0	0	0	0	0	0	0	0	0	0	0	1	0	0	0	0	0	200	10
236	003	0	0	0	0	0	00	0	1	07	0	0	0	0	0	0	0	0	0	3	0	0	0	0	0	0	0	0	0	0	0	0	0	0	000	01
237	205	7	0	0	0	2	00	0	1	07	0	0	0	0	0	0	0	0	0	3	0	0	0	0	0	0	0	0	0	0	0	0	0	0	000	01
240	261	2	0	0	0	3	00	4	1	04	0	0	1	0	0	0	0	0	2	3	0	0	0	0	0	0	0	3	0	0	0	0	4	0	000	10
241	205	7	0	0	0	2	00	0	1	07	0	0	0	0	0	0	0	0	0	3	0	0	0	0	0	0	0	0	0	0	0	0	0	0	000	14
242	105	6	0	0	0	2	00	0	1	07	0	0	0	0	0	0	0	0	0	3	0	0	0	0	0	0	0	0	0	0	0	0	0	0	000	12
243	070	5	0	0	0	0	00	0	1	07	0	0	0	0	0	0	0	0	0	3	0	0	0	0	0	0	0	0	0	0	0	0	0	0	000	14
244	003	0	0	0	0	0	00	4	1	07	0	0	0	0	0	0	0	0	0	0	0	0	0	0	0	0	0	0	0	0	0	0	3	0	000	10
245	003	0	0	0	0	0	10	5	1	07	5	0	0	0	0	0	0	1	0	0	0	0	0	0	0	0	0	1	1	0	0	0	3	0	000	07
246	317	0	0	0	0	0	04	0	1	03	0	0	0	0	1	0	0	3	0	3	0	0	0	0	0	0	0	3	1	0	0	1	0	0	040	13
247	313	3	0	0	0	1	14	3	1	03	0	0	0	0	1	0	0	3	0	3	0	0	0	0	0	0	0	3	3	0	0	1	0	0	000	14
250	306	0	0	0	0	0	02	4	1	07	0	0	0	0	1	0	0	2	0	3	0	0	0	0	0	0	0	0	0	0	0	1	4	0	000	10
251	313	0	0	0	0	0	01	0	1	03	0	0	0	0	1	0	0	0	0	3	3	0	0	0	0	0	0	0	0	0	0	0	0	0	000	07
252	353	0	0	0	0	0	00	5	0	00	0	0	1	0	0	0	1	0	1	3	0	0	0	0	0	0	0	0	1	0	0	0	0	0	370	06
253	245	5	0	0	0	2	05	0	1	03	0	0	0	1	1	0	0	1	0	3	2	0	0	0	0	0	0	0	0	0	0	0	0	0	000	07
254	003	0	0	0	0	0	10	5	1	07	7	0	0	1	0	0	0	1	0	0	2	0	0	0	0	0	0	1	1	0	0	0	3	0	000	10
255	321	5	0	0	0	2	06	0	1	07	0	0	0	0	1	0	0	0	0	3	0	0	0	0	0	0	0	0	0	0	0	0	0	0	000	08
256	151	0	0	0	0	0	00	5	0	00	0	0	1	0	0	0	1	0	1	3	0	0	0	0	0	0	0	1	0	0	0	0	0	0	377	06
257	003	0	0	0	0	0	00	5	1	07	0	0	0	0	0	0	0	0	0	0	2	0	0	0	0	0	0	1	0	0	0	0	0	0	200	08

	NAD	UBR	UJP	AKW	ATW	UAF	FAC	EAC	DSI	SHC	ACC	LNG	QRC	SNM	ARC	ACO	FIL	FMX	QMX	FCC	SNL	MSC	IRC	SYN	FM0	FC1	RGW	AMX	BMX	DIM	SCC	ERC	ACF	ACX	CNT	PGE
260	360	3	0	0	0	2	02	4	1	07	0	0	0	1	1	0	0	2	0	3	3	0	0	0	0	0	0	2	1	0	1	0	3	0	000	01
261	313	0	0	0	0	0	01	0	1	03	0	0	0	1	1	0	0	0	0	3	1	0	0	0	0	0	0	0	0	0	0	0	0	0	000	10
262	003	0	0	0	0	0	17	4	1	07	7	0	0	0	0	0	0	1	0	3	0	0	0	0	0	0	0	3	1	0	0	0	4	0	000	02
263	311	5	0	0	0	2	05	0	1	03	0	0	0	0	1	0	0	1	0	3	0	0	0	0	0	0	0	0	0	0	0	0	0	0	000	10
264	261	2	0	0	0	3	00	4	1	04	0	0	0	0	0	0	0	0	0	3	0	0	0	0	0	0	0	3	0	0	0	0	0	0	000	10
265	313	0	0	0	0	0	04	4	1	03	0	0	0	0	1	0	0	1	0	3	0	0	0	0	0	0	0	0	0	0	0	1	3	0	000	10
266	326	7	0	0	0	0	00	3	1	07	3	0	0	0	0	0	0	0	0	3	0	5	0	0	0	0	0	3	1	0	1	0	6	0	201	12
267	313	0	0	0	0	0	04	4	1	03	0	0	0	0	1	0	0	1	0	3	0	0	0	0	0	0	0	0	0	0	0	1	4	0	000	10
270	150	0	0	0	1	0	00	0	0	07	2	0	0	0	0	0	0	1	0	3	0	0	0	0	0	0	0	0	0	0	0	0	6	1	000	00
271	074	3	0	0	0	0	07	4	1	03	0	0	0	0	1	0	0	1	0	3	0	0	0	0	0	0	0	0	0	0	0	1	3	0	000	10
272	261	5	0	0	0	2	06	0	1	07	0	0	0	0	1	0	0	0	0	3	0	5	0	0	0	0	0	0	0	0	0	0	0	0	000	10
273	272	0	0	0	0	0	07	4	1	07	0	0	0	0	1	0	0	1	0	3	0	0	0	0	0	0	0	0	0	0	0	1	4	0	000	10
274	306	0	0	0	0	0	02	4	1	07	0	0	0	0	1	0	0	2	0	3	0	0	0	0	0	0	0	0	0	0	0	1	4	0	000	10
275	100	0	0	0	0	0	00	5	1	00	0	0	0	0	0	0	0	0	0	3	0	0	0	0	0	0	0	0	1	0	0	0	0	0	370	10
276	003	0	0	0	0	0	10	5	1	07	5	0	0	1	0	0	0	1	0	0	2	0	0	0	0	0	0	1	1	0	0	0	3	0	000	07
277	264	5	0	0	0	1	17	3	1	04	0	0	0	0	1	0	0	0	0	3	0	0	0	0	0	0	0	3	3	0	0	1	0	0	000	10
300	376	5	0	0	0	0	00	0	0	07	0	0	0	0	0	0	0	0	0	3	0	0	0	0	0	0	0	0	0	0	0	0	0	0	000	03
301	003	0	0	0	0	0	00	4	1	07	0	0	0	0	0	0	0	0	0	0	3	0	0	0	0	0	0	2	0	0	0	0	0	0	000	08
302	255	4	0	0	0	2	07	0	1	07	0	0	0	1	1	0	0	1	0	3	3	0	0	0	0	0	0	0	0	0	0	0	2	0	000	08
303	003	0	0	0	0	0	00	4	1	07	0	0	0	1	0	0	0	0	0	0	0	0	0	0	0	0	0	2	0	0	0	0	0	0	000	08
304	304	0	0	0	0	0	00	0	1	00	0	0	0	0	0	0	0	0	0	0	0	0	0	0	0	0	0	0	0	0	0	0	0	0	000	00
305	325	0	0	0	0	0	10	5	1	07	7	0	0	1	0	0	0	1	0	3	0	0	0	0	0	0	0	1	1	0	0	0	1	0	000	12
306	003	0	0	0	0	0	17	4	1	07	7	0	0	1	0	0	0	1	0	0	1	0	0	0	0	0	0	3	1	0	0	0	3	0	000	10
307	005	3	0	0	0	2	00	0	1	07	0	0	0	0	0	0	0	0	0	3	0	0	0	0	0	0	0	2	1	0	1	0	0	0	031	12
310	312	0	0	0	0	0	17	5	1	07	0	0	0	0	1	0	0	0	0	3	0	0	0	0	0	0	0	0	1	0	0	1	0	0	237	07
311	003	0	0	0	0	0	10	5	1	07	7	0	0	1	0	0	0	1	0	0	2	0	0	0	0	0	0	1	1	0	0	0	3	0	000	10
312	251	5	0	0	0	2	06	0	1	07	0	0	0	0	1	0	0	0	0	3	0	0	0	0	0	0	0	0	0	0	0	0	0	0	000	07
313	313	3	0	0	0	1	14	3	1	03	0	0	0	0	1	0	0	3	0	3	0	0	0	0	0	0	0	3	3	0	0	1	0	0	000	14
314	312	0	0	0	0	0	17	5	1	07	0	0	0	0	1	0	0	0	0	3	0	0	0	0	0	0	0	0	1	0	0	1	0	0	217	07
315	315	0	0	0	0	0	00	0	1	00	0	0	0	0	0	0	0	0	0	0	0	0	0	0	0	0	0	0	0	0	0	0	0	0	000	00
316	101	5	0	0	0	2	17	5	0	00	0	0	0	0	1	0	0	1	0	3	0	0	0	0	0	0	0	0	1	0	0	0	0	0	377	06
317	160	5	1	0	0	2	17	3	1	07	7	0	0	0	1	0	0	1	0	1	0	0	0	0	0	0	0	3	3	0	0	1	3	0	000	14
320	300	3	0	0	0	2	02	0	1	07	0	0	0	1	1	0	0	2	0	3	0	0	0	0	0	0	0	0	0	0	0	0	4	0	000	08
321	003	0	0	0	0	0	00	5	1	07	0	0	0	0	0	0	0	0	0	0	3	0	0	0	0	0	0	0	1	0	0	0	0	0	200	08
322	316	0	0	0	0	0	06	5	0	00	0	0	0	0	1	0	0	0	0	3	0	0	0	0	0	0	0	0	1	0	0	0	0	0	370	06
323	135	5	1	0	0	2	00	5	1	07	0	0	0	0	0	0	0	0	0	0	2	0	0	0	0	0	0	0	1	0	0	0	0	0	200	08
324	003	0	0	0	0	0	00	4	1	07	0	0	0	0	0	0	0	0	0	0	3	0	0	0	0	0	0	2	0	0	0	0	0	0	000	08
325	317	0	0	0	0	0	04	4	1	03	0	0	0	1	1	0	0	3	0	3	0	0	0	0	0	0	0	3	0	0	0	1	0	0	000	12
326	365	3	0	0	0	2	00	3	1	07	0	0	0	1	0	0	0	0	0	3	3	0	0	0	0	0	0	2	1	0	1	0	6	0	070	12
327	305	3	0	0	0	2	00	3	1	07	0	0	0	1	0	0	0	0	0	3	3	0	0	0	0	0	0	2	1	0	1	0	6	0	030	12
330	003	0	0	0	0	0	00	4	1	07	0	0	0	0	0	0	0	0	0	0	0	0	0	0	0	0	0	2	0	0	0	0	0	0	000	08
331	345	0	0	0	0	0	00	5	0	07	0	0	0	1	0	0	0	0	0	0	2	0	0	0	0	0	0	0	1	0	0	0	0	0	000	06
332	332	3	0	0	0	1	00	3	1	00	0	0	1	0	0	0	1	0	1	3	0	0	0	0	0	0	0	2	3	0	1	0	0	0	000	12
333	370	3	0	0	0	2	00	3	0	00	0	0	0	0	0	0	0	0	0	3	0	0	0	0	0	0	0	2	1	0	1	0	0	0	010	06

	NAD	UBR	UJP	AKW	ATW	UAF	FAC	EAC	DSI	SHC	ACC	LNG	QRC	SNM	ARC	ACO	FIL	FMX	QMX	FCC	SNL	MSC	IRC	SYN	FM0	FC1	RGW	AMX	BMX	DIM	SCC	ERC	ACF	ACX	CNT	PGE
334	003	0	0	0	0	0	10	5	1	07	7	0	0	1	0	0	0	1	0	0	2	0	0	0	0	0	0	1	1	0	0	0	3	0	000	08
335	345	0	0	0	0	0	10	5	0	07	5	0	0	1	0	0	0	1	0	2	2	0	0	0	0	0	0	1	1	0	0	0	6	0	000	06
336	170	0	0	0	0	0	00	4	1	07	7	0	0	0	0	0	0	1	0	3	0	0	0	0	0	0	0	3	1	0	0	0	1	0	000	12
337	252	5	0	0	0	1	00	5	0	00	0	0	1	0	0	0	1	0	1	3	0	0	0	0	0	0	0	0	1	0	0	0	0	0	370	06
340	232	7	0	0	0	0	00	5	1	07	0	0	0	0	0	0	0	2	0	3	3	0	0	0	0	0	0	0	1	0	1	0	3	0	030	11
341	102	5	1	0	0	0	10	5	1	07	7	0	0	1	0	0	0	1	0	0	2	0	0	0	0	0	0	1	1	0	0	1	3	0	000	12
342	014	0	0	0	0	0	07	0	1	01	0	1	1	0	1	0	0	2	3	3	0	0	0	0	0	0	0	0	0	0	0	0	4	0	000	13
343	313	3	0	0	0	1	14	3	1	03	0	0	0	0	1	0	0	3	0	3	0	0	0	0	0	0	0	3	3	0	0	1	0	0	000	14
344	351	4	0	0	0	1	10	5	1	07	7	0	0	1	0	0	0	1	0	0	2	0	0	0	0	0	0	1	1	0	0	0	3	0	000	11
345	200	7	0	0	0	1	00	0	0	07	0	0	0	0	0	2	0	0	0	3	0	4	0	0	0	0	0	0	0	0	0	0	6	0	000	05
346	006	0	0	0	0	0	00	5	1	07	2	0	0	0	0	0	0	1	0	3	0	0	0	0	0	0	0	0	1	2	0	0	7	1	004	13
347	103	0	0	0	0	0	01	0	0	07	0	0	0	0	1	0	0	0	0	3	0	0	0	0	0	0	0	0	0	0	0	0	0	0	000	06
350	351	4	0	0	0	1	10	5	1	07	7	0	0	1	0	0	0	1	0	0	2	0	0	0	0	0	0	1	1	0	0	0	3	0	000	11
351	003	0	0	0	0	0	00	0	1	07	0	0	0	0	0	0	0	0	0	3	0	0	0	0	0	0	0	0	0	0	0	0	0	0	000	11
352	003	0	0	0	0	0	10	5	1	07	7	0	0	1	0	0	0	1	0	0	2	0	0	0	0	0	0	1	1	0	0	0	3	0	000	13
353	256	0	0	0	0	0	00	5	0	00	0	0	1	0	0	0	1	0	1	3	0	0	0	0	0	0	0	0	1	0	0	0	0	0	370	06
354	351	4	0	0	0	1	10	5	1	07	7	0	0	1	0	0	0	1	0	0	2	0	0	0	0	0	0	1	1	0	0	0	3	0	000	11
355	003	0	0	0	0	0	10	5	1	07	7	0	0	1	0	0	0	1	0	3	2	0	0	0	0	0	0	1	1	0	0	0	1	0	000	11
356	006	0	0	0	0	0	00	5	1	07	2	0	0	0	0	0	0	1	0	3	0	0	0	0	0	0	0	0	1	2	0	0	7	1	004	13
357	322	0	0	0	0	0	00	5	0	00	0	0	0	0	1	0	0	1	0	3	0	0	0	0	0	0	0	0	1	0	0	0	0	0	001	06
360	205	7	0	0	0	2	17	4	1	07	3	0	0	0	0	0	0	1	0	0	0	0	0	0	0	0	0	2	1	0	0	0	3	0	000	01
361	226	3	0	0	0	0	00	0	1	07	0	0	0	0	0	0	0	0	0	3	0	0	0	0	0	0	0	3	1	0	0	1	0	0	001	01
362	003	0	0	0	0	0	17	0	1	07	3	0	0	0	0	0	0	1	0	0	0	0	0	0	0	0	0	2	1	0	0	0	3	0	200	01
363	070	0	0	0	0	0	17	1	1	07	3	0	0	0	0	0	0	1	0	1	0	0	0	0	0	0	0	2	1	0	0	0	3	0	377	01
364	364	0	0	0	0	0	00	0	1	00	0	0	0	0	0	0	0	0	0	0	0	0	0	0	0	0	0	0	0	0	0	0	0	0	000	00
365	325	0	0	0	0	0	10	5	1	07	7	0	0	1	0	0	0	1	0	3	0	0	0	0	0	0	0	1	1	0	0	0	1	0	000	12
366	366	0	0	0	0	0	00	0	1	00	0	0	0	0	0	0	0	0	0	0	0	0	0	0	0	0	0	0	0	0	0	0	0	0	000	00
367	005	3	0	0	0	2	00	0	1	07	0	0	0	0	0	0	0	0	0	3	0	0	0	0	0	0	0	2	1	0	1	0	0	0	071	12
370	331	3	0	0	0	2	00	3	0	07	0	0	0	0	0	0	0	0	0	3	0	0	0	0	0	0	0	3	1	0	1	0	0	0	037	06
371	371	3	0	0	0	1	17	3	0	00	0	0	0	0	1	0	0	0	0	3	0	0	0	0	0	0	0	2	3	0	1	0	0	0	000	06
372	335	4	0	0	0	2	00	5	0	00	0	0	0	0	0	0	0	0	0	0	0	0	0	0	0	0	0	0	1	0	1	0	0	0	370	06
373	345	0	0	0	0	0	10	5	0	07	5	0	0	1	0	0	0	1	0	2	2	0	0	0	0	0	0	1	1	0	0	0	6	0	000	06
374	331	3	0	0	0	2	00	3	0	07	0	0	0	0	0	0	0	0	0	3	0	0	0	0	0	0	0	3	1	0	1	0	0	0	017	06
375	345	4	0	0	0	2	17	5	0	07	5	0	0	0	0	0	0	1	0	0	0	0	0	0	0	0	0	1	1	0	0	0	6	0	200	06
376	125	6	0	0	0	2	00	5	0	07	0	0	0	0	0	0	0	0	0	3	0	0	0	0	0	0	0	0	1	0	1	0	0	0	000	03
377	153	7	0	0	0	1	00	0	0	07	0	0	0	0	0	3	0	0	0	3	0	4	0	1	0	0	0	0	0	0	0	0	6	0	000	09

REVISIONS

CHK	CHANGE NO.	REV.

TITLE: FP ROM CONTROL

SIZE: D | CODE: CS | NUMBER: M8128-Ø-1 | REV.: B

SCALE: — | SHEET 11 OF 11 | DIST.

DEC FORM NO. DRD 138

"THIS DRAWING AND SPECIFICATIONS, HEREIN, ARE THE PROPERTY OF DIGITAL EQUIPMENT CORPORATION AND SHALL NOT BE REPRODUCED OR COPIED OR USED IN WHOLE OR IN PART AS THE BASIS FOR THE MANUFACTURE OR SALE OF ITEMS WITHOUT WRITTEN PERMISSION. COPYRIGHT © 1975 DIGITAL EQUIPMENT CORPORATION"

NOTES: E110 IS SPARE IC LOCATION

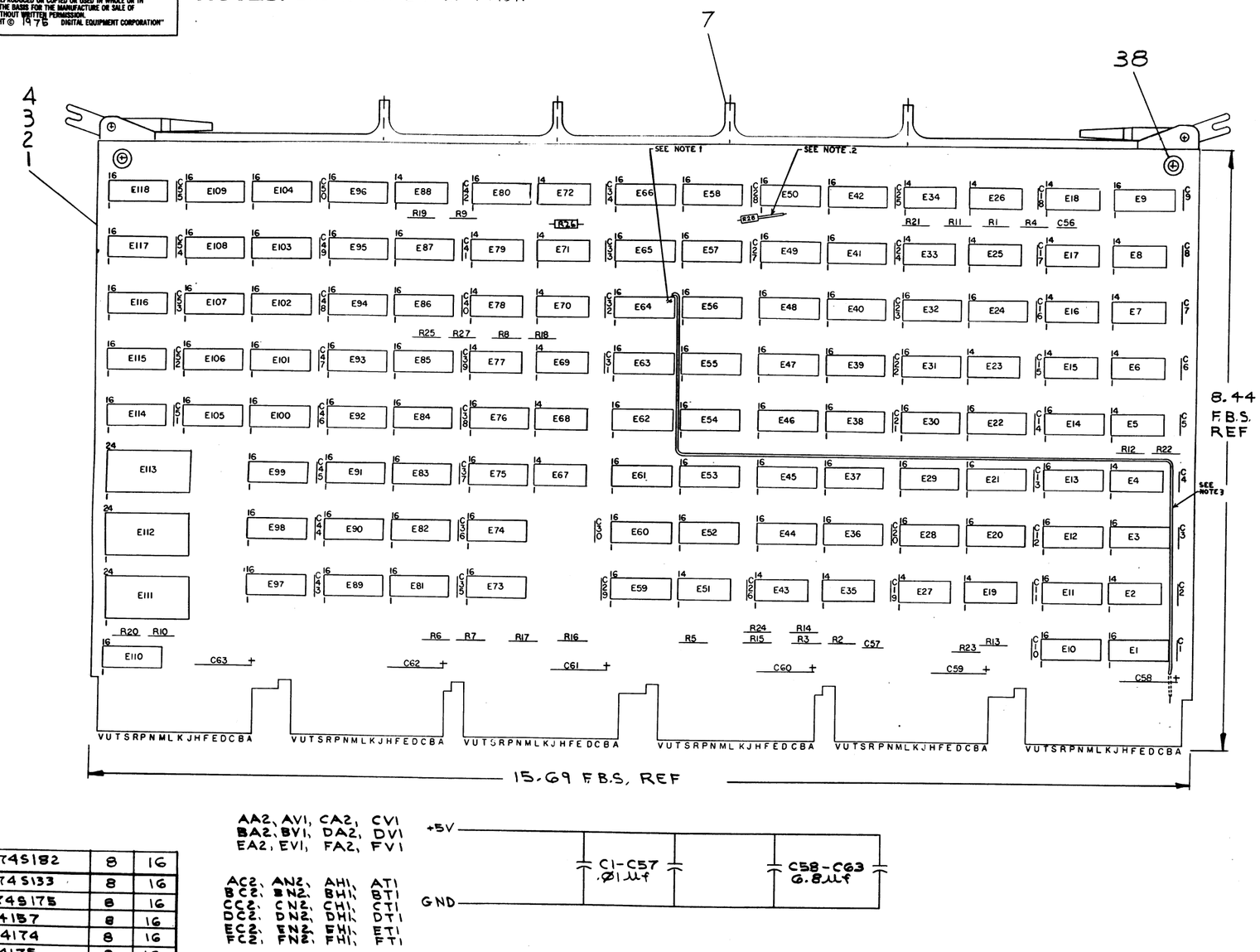

IC TYPE	GND	+5V
IC 74S182	8	16
IC 74S133	8	16
IC 74S175	8	16
IC 74157	8	16
IC 74174	8	16
IC 74175	8	16
IC 74S174	8	16
IC 74S158	8	16
IC 74S153	8	16
IC 74S181	12	24
IC 7485	8	16
IC 74153	8	16
IC 74151	8	16

GND AND 5V ARE USUALLY PIN 7 AND 14 RESPECTIVELY EXCEPTIONS ARE STATED ABOVE

IC PIN LOCATIONS

QTY	REF. DESIGNATION	DESCRIPTION	PART NO.	ITEM NO.
REF		X-Y COORDINATE HOLE LOCATION	K-CO-M8129-Ø-4	1
REF		ASSY/DRILLING HOLE LAYOUT	D-AH-M8129-Ø-5	2
REF		MODULE ECO HISTORY	B-MH-M8129-Ø-6	3
1		ETCHED CIRCUIT BOARD	5011873	4
57	C1 THRU C57	CAPACITOR, .01uf	1001610-00	5
6	C58 THRU C63	CAPACITOR, 6.8uf	1005306	6
1		HANDLE HEX MODULE	1210711-2	7
12	R5 THRU R14,R25,R27	RESISTOR, 330 OHM, 1/4W, 5%	1300295	8
2	R3,R4	RESISTOR, 560 OHM, 1/4W, 5%	1301890	9
10	R15 THRU R24	RESISTOR, 680 OHM, 1/4W, 5%	1301424	10
2	R1,R2	RESISTOR, 270 OHM, 1/4W, 5%	1301972	11
1	R26	RES, 100Ω, 1/4W, 5%	1300229	12
2	E33,E69	I.C. DEC 8242	1909712	13
1	E84	I.C. DEC 74151	1909936	14
8	E45 THRU E48,E53 THRU E56	I.C. DEC 74153	1909937	15
2	E42,E50	I.C. DEC 7485	1910224	16
3	E111 THRU E113	I.C. DEC 74S181	1910531	17
5	E7,E9,E15,E43,E80	I.C. DEC 74SØØ	1910532	18
2	E23,E99	I.C. DEC 74SØ4	1910534	19
6	E2,E4,E5,E19,E27,E35	I.C. DEC 74SØ5	1910535	20
5	E16,E67,E70,E71,E78	I.C. DEC 74S1Ø	1910536	21
3	E25,E72,E79	I.C. DEC 74S11	1910537	22
3	E51,E68,E88	I.C. DEC 74S2Ø	1910539	23
3	E6,E8,E18	I.C. DEC 74S14Ø	1910546	24
17	E21,E22,E29 THRU E31,E37, E38,E39,E104 THRU E107,E114 THRU E118	I.C. DEC 74S153	1910547	25
1	E26	I.C. DEC 74S74	1910544	26
1	E17	I.C. DEC 74S64	1910542	27
5	E20,E28,E36,E100,E102	I.C. DEC 74S174	1910550	28
11	E41,E47,E49,E76,E82,E90, E92,E97,E99,E100,E26	I.C. DEC 74175	1910651	29
9	E24,E32,E40,E73,E81,E89, E92,E101,E103	I.C. DEC 74174	1910652	30
1	E94	I.C. DEC 74157	1910655	31
4	E64,E75,E89,E91,	I.C. DEC 74S175	1910957	32
2	E34,E77	I.C. DEC 74S51	1911712-ØØ-S	33
1	E12	I.C. DEC 74S133	1911983-ØØ-S	34
3	E44,E52 E86	I.C. DEC 74S158	1910549	35
6	E1,E3,E10,E11,E13,E14	I.C. DEC 74S189	1912661	36
1	E98	I.C. DEC 74S182	1912097	37
12		EYELET	9006732	38
1	E63	ROM	23D26A2	39
1	E65	ROM	23D28A2	40
1	E66	ROM	23D27A2	41
1	E87	ROM	23DØ1A2	42
1	E93	ROM	23DØ2A2	43
1	E96	ROM	23DØ3A2	44
1	E95	ROM	23DØ4A2	45
1	E85	ROM	23DØ5A2	46
1	E108	ROM	23DØ7A2	47
1	E109	ROM	23DØ8A2	48
1	E59	ROM	23D24A2	49
1	E61	ROM	23D25A2	50
1	R28	RES 150Ω 1/4W 5%	1300250	51
A/R		WIRE, 30AWG.	9105740-55	52
A/R		TUBING	9107278-09	53

PARTS LIST

FIRST USED ON OPTION MODEL: FPII-C

ETCH BOARD REV. C

DEC NO.	EIA NO.	DEC NO.	EIA NO.

SEMICONDUCTOR CONVERSION CHART

REV.	CHANGE NO.	CHK
B	M8129-00001	A.HELENIUS 21 Januarie c. 31 DEC '75

REVISIONS

DRN. DATE
CHK'D. DATE 12-2-75
ENG. KJD Allan Helenius DATE 12/2/75
PROJ. ENG. KJD Allan Helenius DATE 12/2/75
PROD. DATE 12/2/75
NEXT HIGHER ASSY B-DD-FPII C
SCALE
SHEET 1 OF 15

digital

TITLE FRACTION PROC EXPON PATH

SIZE	CODE	NUMBER	REV.
D	CS	M8129-Ø-1	B

DIST.

DEC FORM NO. DRD 135.8

"THIS DRAWING AND SPECIFICATIONS, HEREIN, ARE THE PROPERTY OF DIGITAL EQUIPMENT CORPORATION AND SHALL NOT BE REPRODUCED OR COPIED OR USED IN WHOLE OR IN PART AS THE BASIS FOR THE MANUFACTURE OR SALE OF ITEMS WITHOUT WRITTEN PERMISSION. COPYRIGHT © 1975 DIGITAL EQUIPMENT CORPORATION"

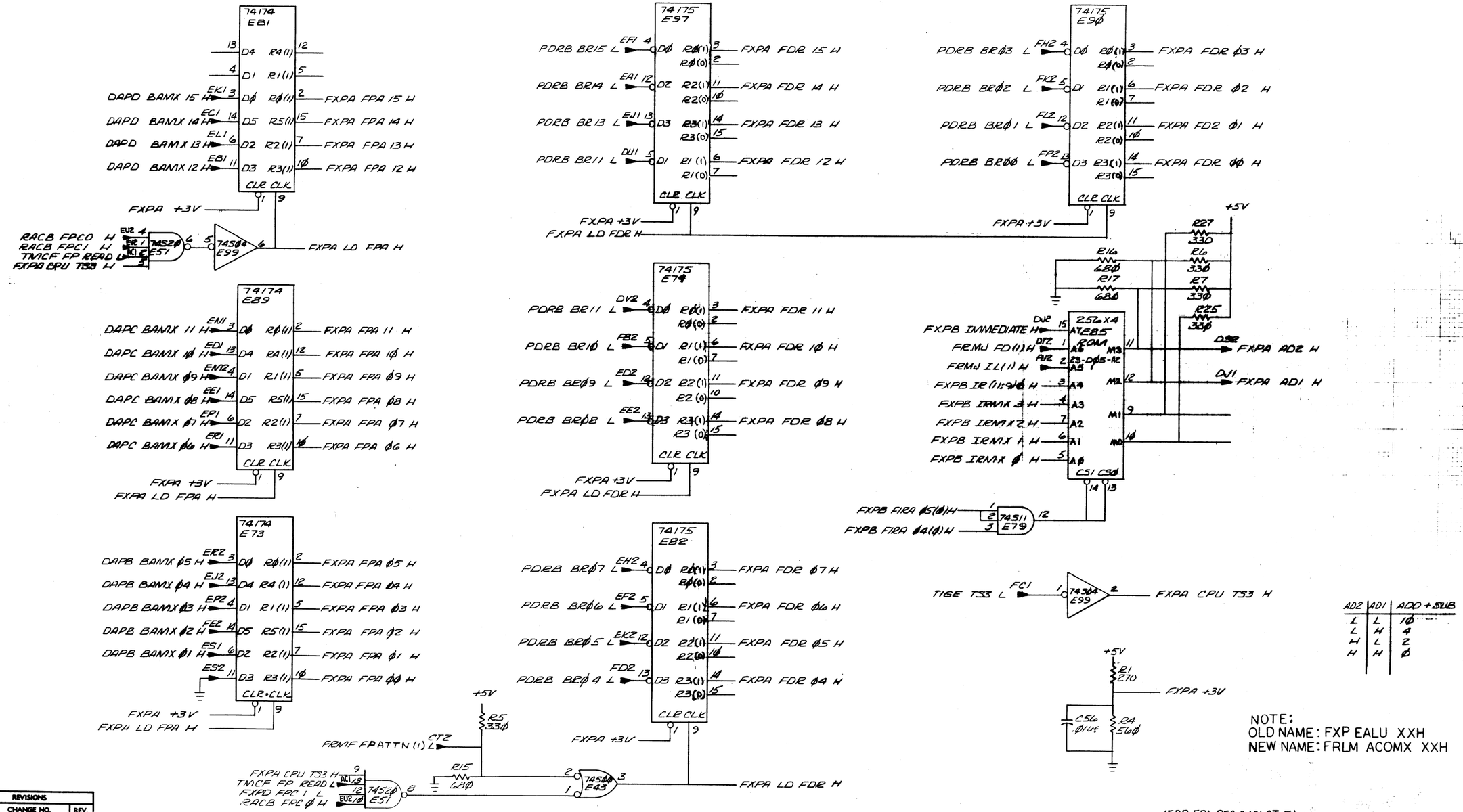

REVISIONS		
CHK	CHANGE NO.	REV.

(FDR, FPA REGS (SLOT 5)

TITLE	SIZE	CODE	NUMBER	REV.
FRACTION PROC. EXPON. PATH. (FXPA)	D	CS	M8129-0-1	B
SCALE #	SHEET 2 OF 15	DIST.		

DEC FORM NO. DRD 130

"THIS DRAWING AND SPECIFICATIONS, HEREIN, ARE THE PROPERTY OF DIGITAL EQUIPMENT CORPORATION AND SHALL NOT BE REPRODUCED OR COPIED OR USED IN WHOLE OR IN PART AS THE BASIS FOR THE MANUFACTURE OR SALE OF ITEMS WITHOUT WRITTEN PERMISSION. COPYRIGHT © 1975 DIGITAL EQUIPMENT CORPORATION"

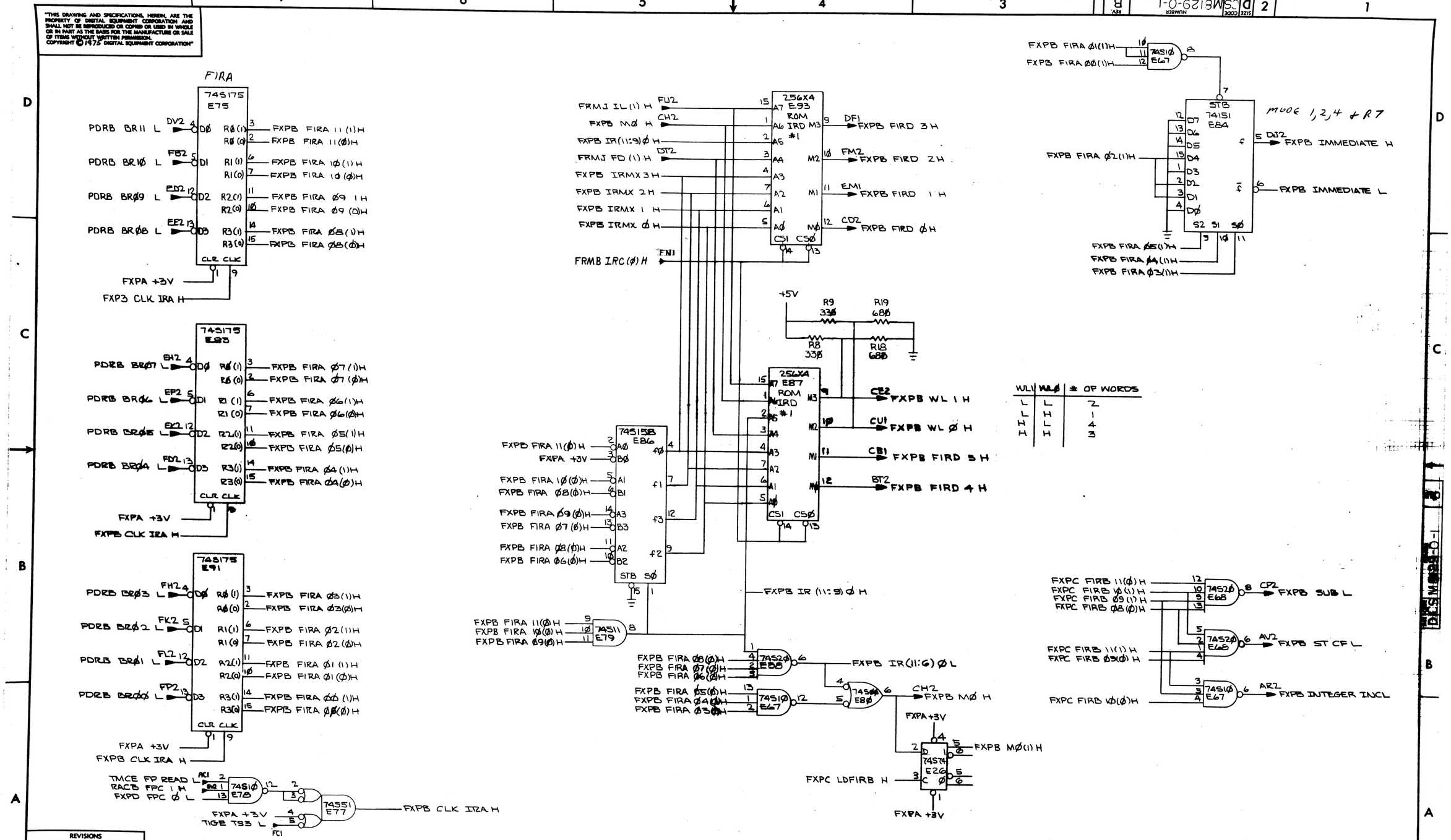

WL1	WL0	# OF WORDS
L	L	2
L	H	1
H	L	4
H	H	3

(FIRA REG IR DECODE (SLOT 5)

REVISIONS		
CHK	CHANGE NO.	REV.

TITLE	SIZE	CODE	NUMBER	REV.
FRACTION PROC. EXPON. PATH (FXPB)	D	CS	M8129-0-1	B
SCALE	SHEET 3 OF 15	DIST.		

DEC FORM NO. DRD 138

"THIS DRAWING AND SPECIFICATIONS, HEREIN, ARE THE PROPERTY OF DIGITAL EQUIPMENT CORPORATION AND SHALL NOT BE REPRODUCED OR COPIED OR USED IN WHOLE OR IN PART AS THE BASIS FOR THE MANUFACTURE OR SALE OF ITEMS WITHOUT WRITTEN PERMISSION. COPYRIGHT © 1975 DIGITAL EQUIPMENT CORPORATION"

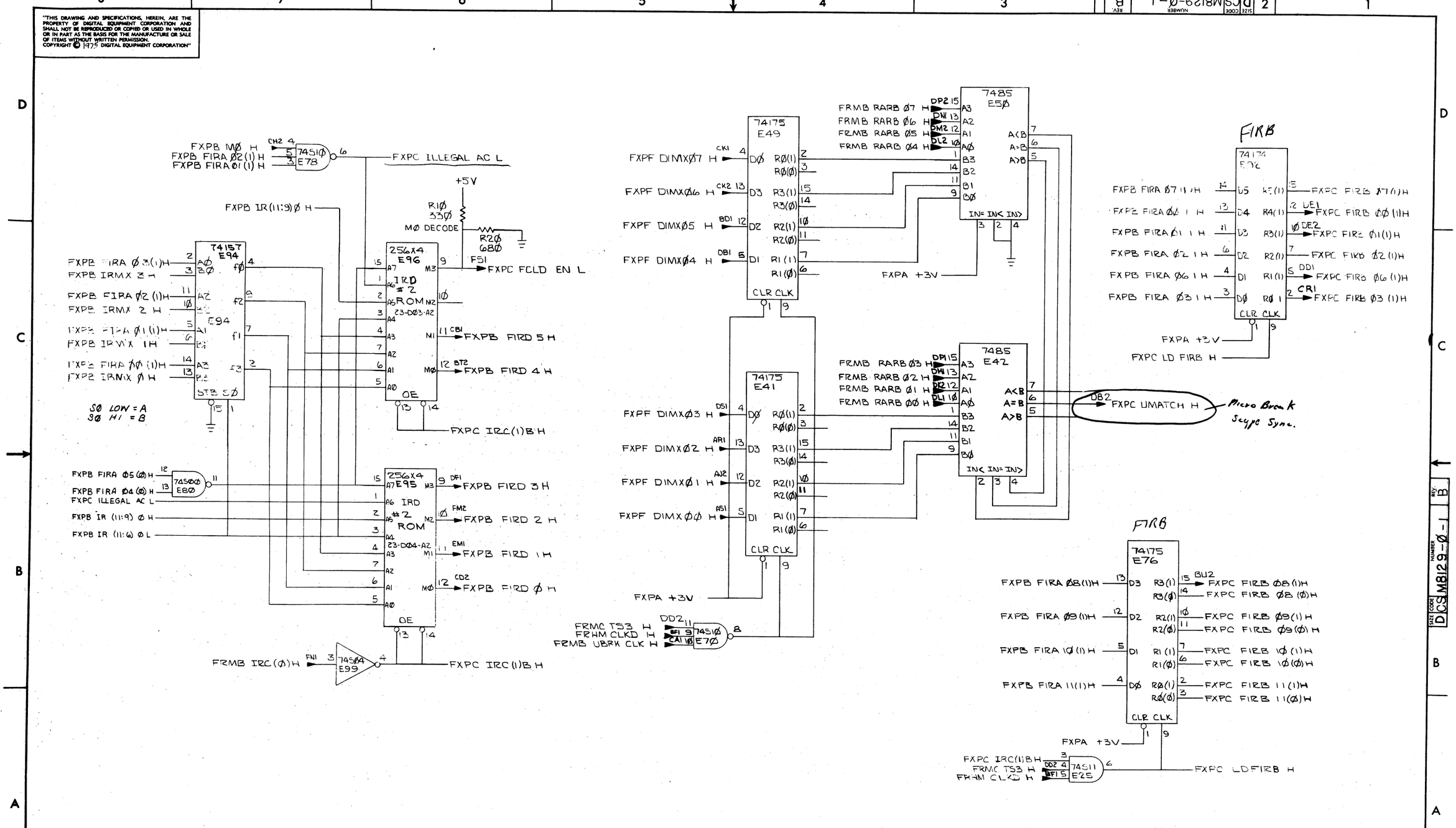

REVISIONS		
CHK	CHANGE NO.	REV.

(UBREAK REG, IR DECODE (SLOT 5)

TITLE	SIZE	CODE	NUMBER	REV.
FRACTION PROC. EXPON. PATH (FXPC)	D	CS	M8129-0-1	B
SCALE —	SHEET 4 OF 15	DIST.		

DEC FORM NO. DRD 138

"THIS DRAWING AND SPECIFICATIONS, HEREIN, ARE THE PROPERTY OF DIGITAL EQUIPMENT CORPORATION AND SHALL NOT BE REPRODUCED OR COPIED OR USED IN WHOLE OR IN PART AS THE BASIS FOR THE MANUFACTURE OR SALE OF ITEMS WITHOUT WRITTEN PERMISSION.
COPYRIGHT © 197 DIGITAL EQUIPMENT CORPORATION"

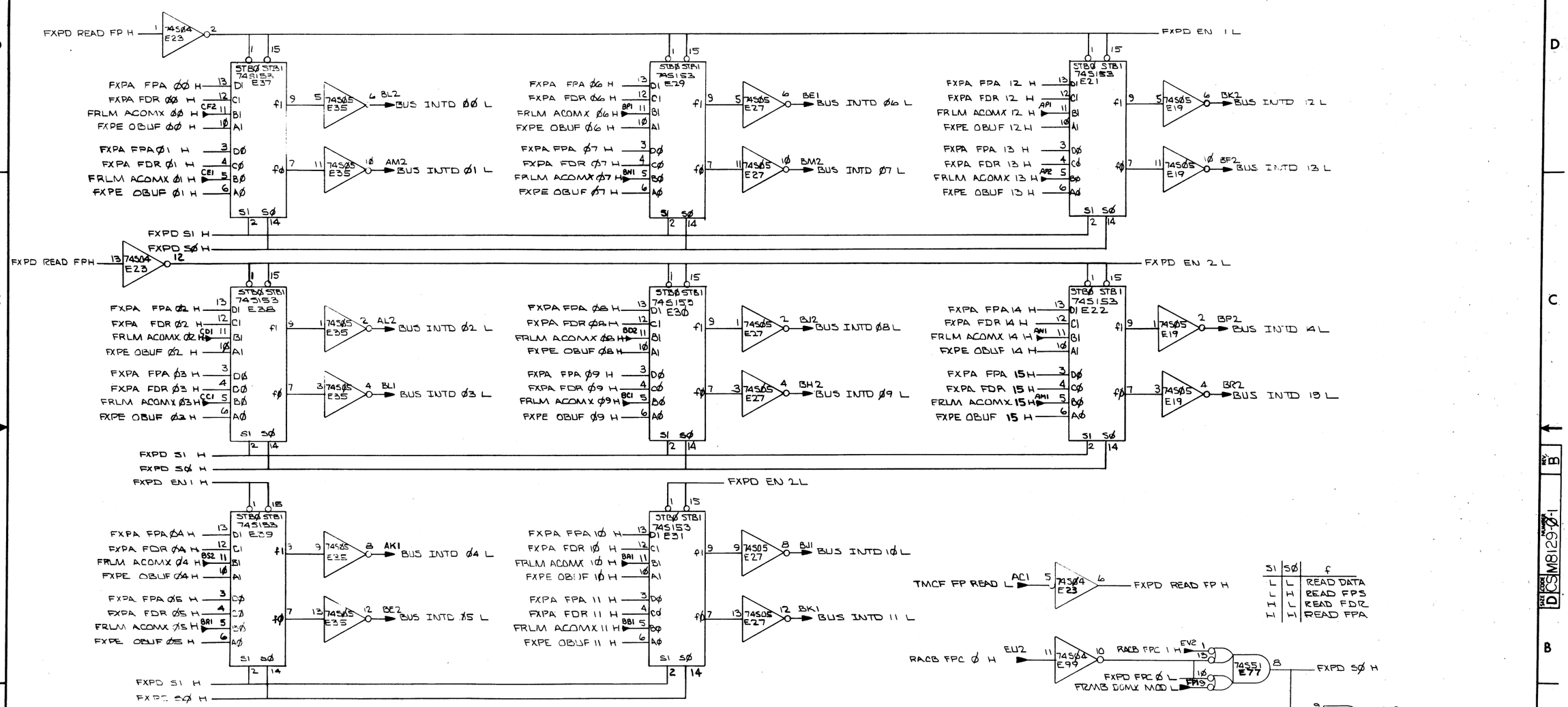

S1	S0	f
L	L	READ DATA
L	H	READ FPS
H	L	READ FDR
H	H	READ FPA

(DOMX (SLOT 5)

REVISIONS		
CHK	CHANGE NO.	REV.

TITLE	SIZE	CODE	NUMBER	REV.
FRACTION PFC EXPON. PATH. (FXPD)	D	CS	M8129-0-1	B
SCALE ##	SHEET 5 OF 15	DIST.		

DEC FORM NO. DRD 138

"THIS DRAWING AND SPECIFICATIONS, HEREIN, ARE THE PROPERTY OF DIGITAL EQUIPMENT CORPORATION AND SHALL NOT BE REPRODUCED OR COPIED OR USED IN WHOLE OR IN PART AS THE BASIS FOR THE MANUFACTURE OR SALE OF ITEMS WITHOUT WRITTEN PERMISSION.
COPYRIGHT © 1975 DIGITAL EQUIPMENT CORPORATION"

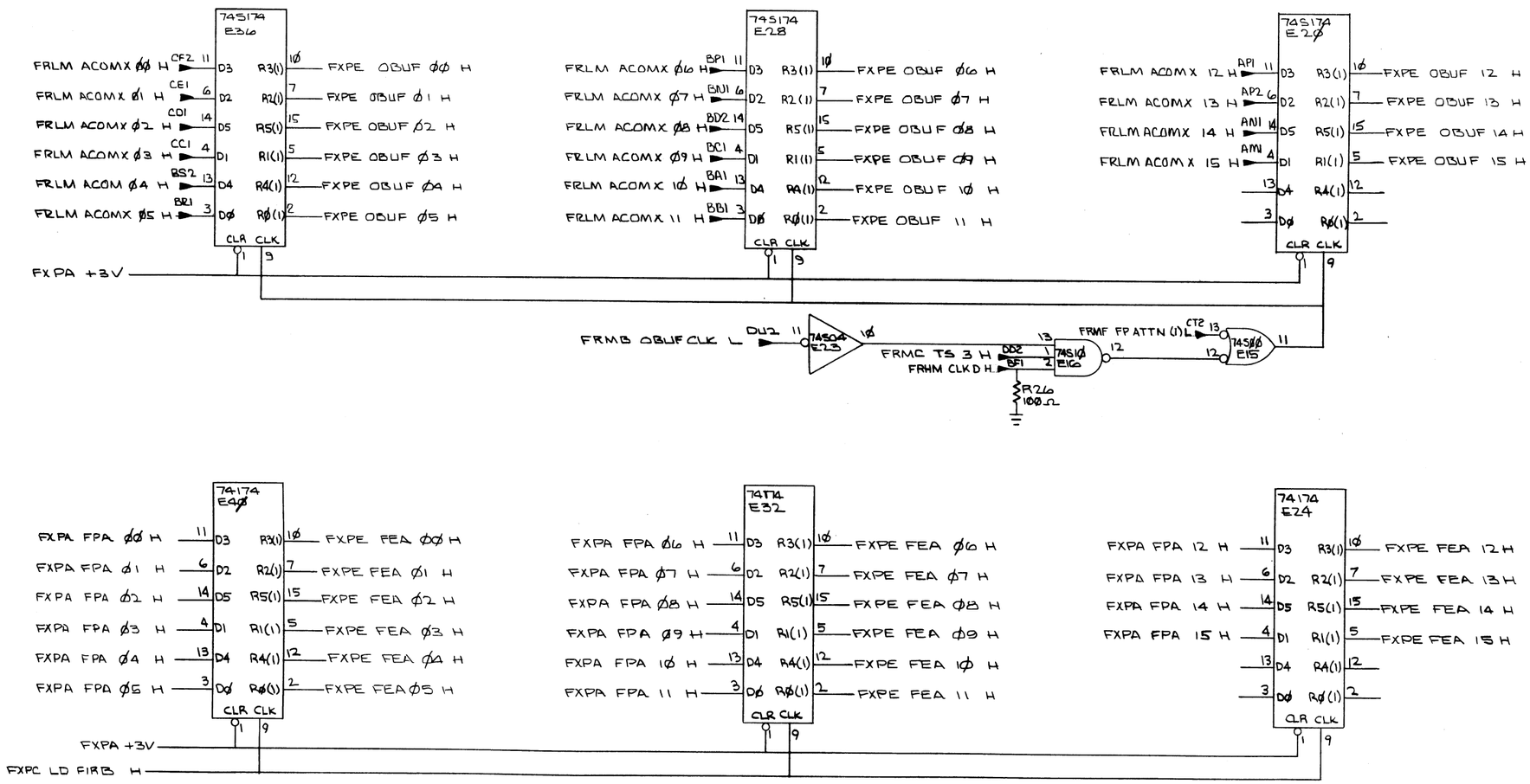

REVISIONS		
CHK	CHANGE NO.	REV.

(OBUF/FEA (SLOT 5)

TITLE FRACTION PROC. EXPON. PATH. (FXPE)

SIZE D CODE CS NUMBER M8129-Ø-1 REV. B

SCALE —/— SHEET 6 OF 15 DIST.

DEC FORM NO. DRD 138

"THIS DRAWING AND SPECIFICATIONS, HEREIN, ARE THE PROPERTY OF DIGITAL EQUIPMENT CORPORATION AND SHALL NOT BE REPRODUCED OR COPIED OR USED IN WHOLE OR IN PART AS THE BASIS FOR THE MANUFACTURE OR SALE OF ITEMS WITHOUT WRITTEN PERMISSION.
COPYRIGHT © 1975 DIGITAL EQUIPMENT CORPORATION"

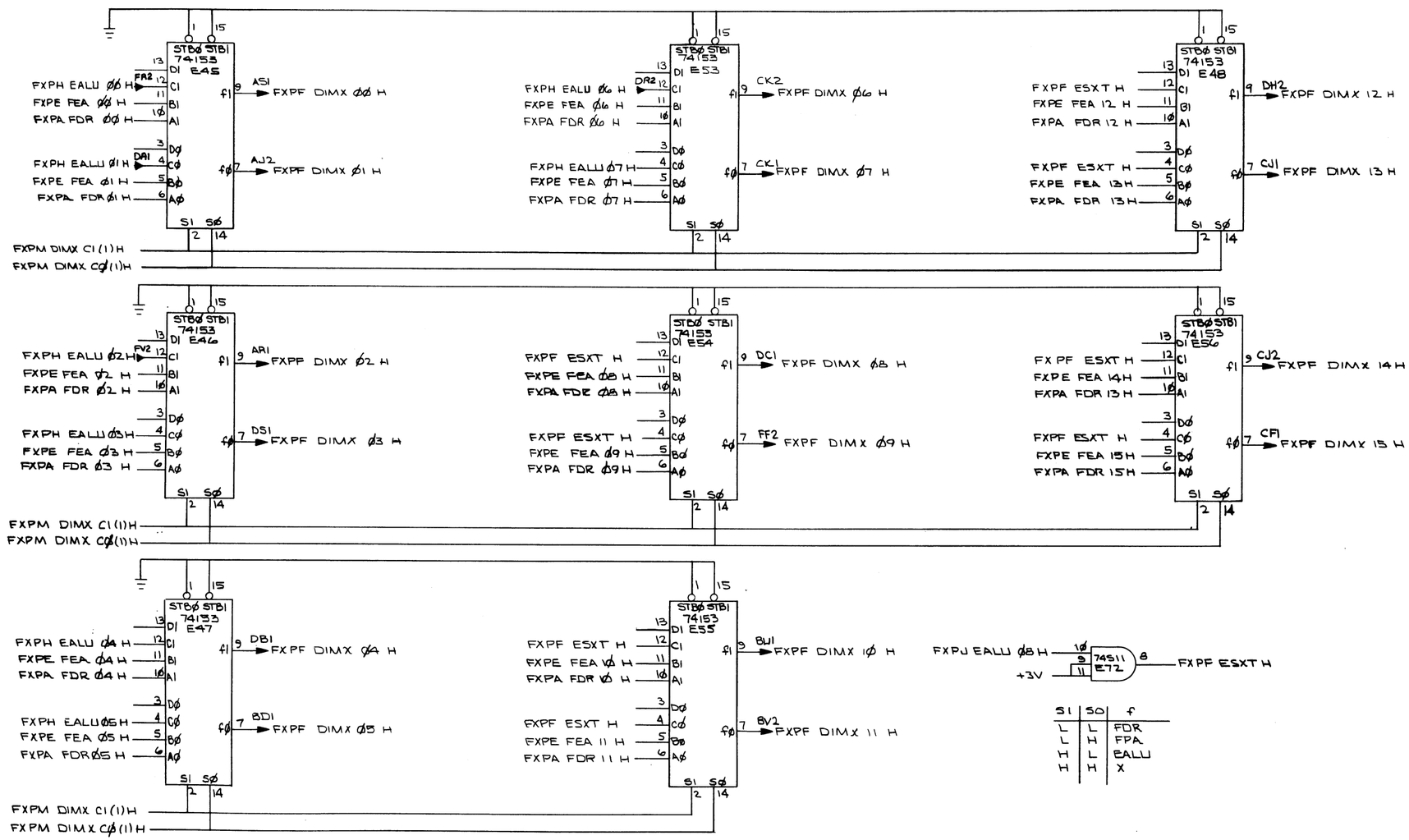

(DATA IN MUX (SLOT 5)

REVISIONS		
CHK	CHANGE NO.	REV.

TITLE	SIZE	CODE	NUMBER	REV.
FRACTION PROC. EXPON. PATH. (FXPF)	D	CS	M8129-Ø-1	B
SCALE —	SHEET 7 OF 15	DIST.		

DEC FORM NO. DRD 128

"THIS DRAWING AND SPECIFICATIONS, HEREIN, ARE THE PROPERTY OF DIGITAL EQUIPMENT CORPORATION AND SHALL NOT BE REPRODUCED OR COPIED OR USED IN WHOLE OR IN PART AS THE BASIS FOR THE MANUFACTURE OR SALE OF ITEMS WITHOUT WRITTEN PERMISSION.
COPYRIGHT © 1975 DIGITAL EQUIPMENT CORPORATION"

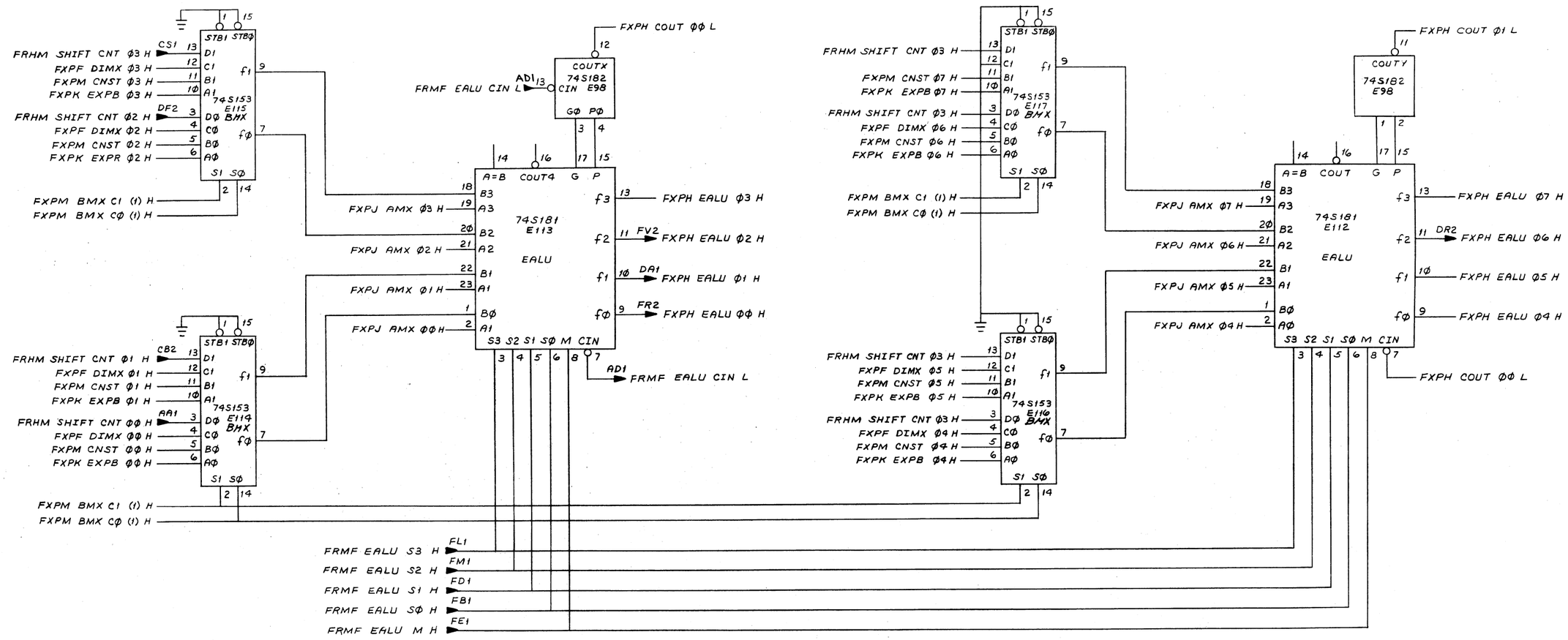

BMX	S1	SØ	f
	L	L	EXP
	L	H	CNST
	H	L	DIMX
	H	H	SHIFT CONT.

(EALU LOW (SLOT 5)

REVISIONS		
CHK	CHANGE NO.	REV.

TITLE	SIZE	CODE	NUMBER	REV.
FRACTION PROC. EXPON. PATH (FXPH)	D	CS	M8129-Ø-1	B
SCALE —	SHEET 8 OF 15	DIST.		

DEC FORM NO. DRD 130

"THIS DRAWING AND SPECIFICATIONS, HEREIN, ARE THE PROPERTY OF DIGITAL EQUIPMENT CORPORATION AND SHALL NOT BE REPRODUCED OR COPIED OR USED IN WHOLE OR IN PART AS THE BASIS FOR THE MANUFACTURE OR SALE OF ITEMS WITHOUT WRITTEN PERMISSION.
COPYRIGHT © 1975 DIGITAL EQUIPMENT CORPORATION"

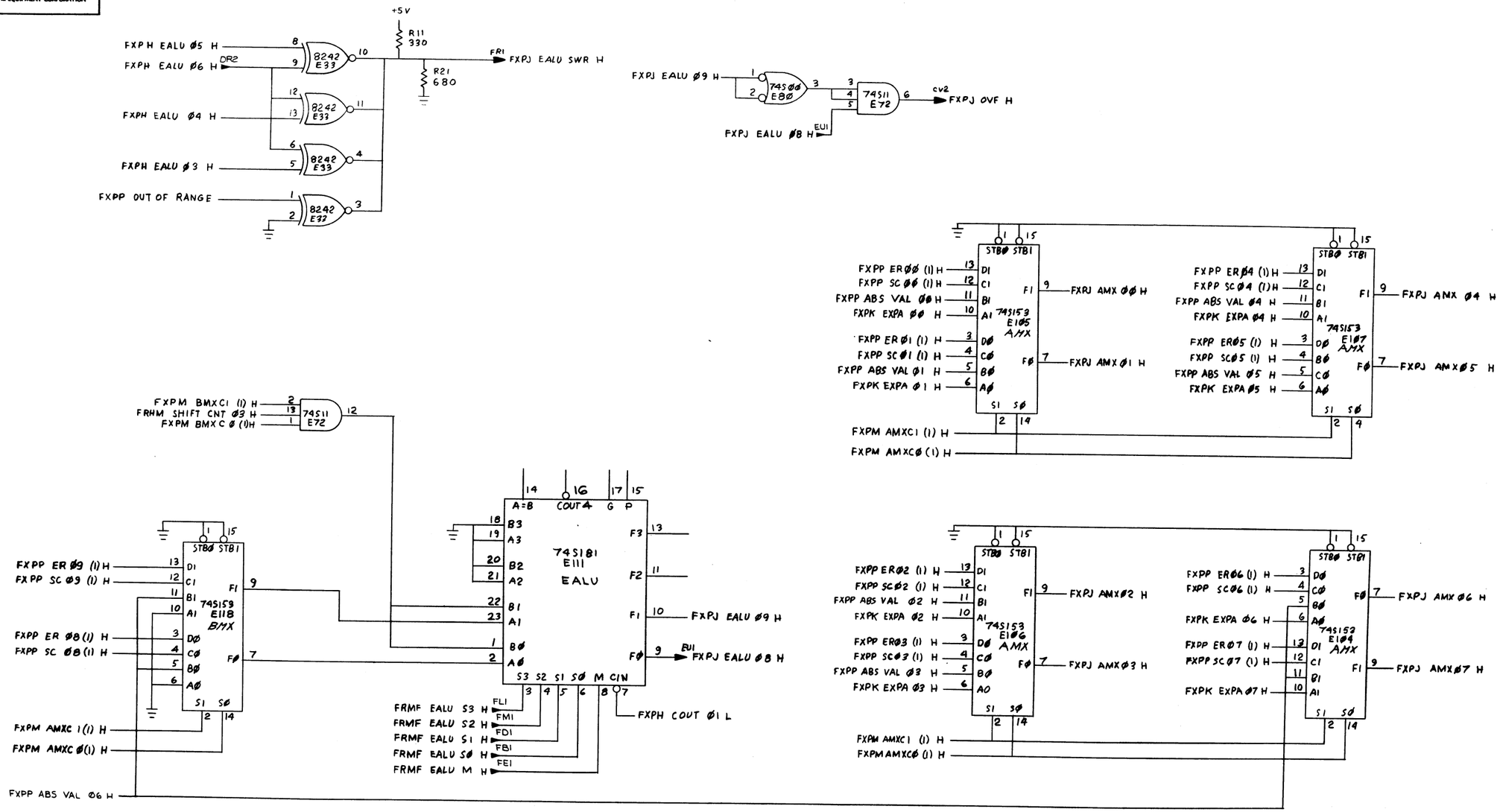

AMX	S1	SØ	F
	L	L	EXP
	L	H	ABS SC
	H	L	SC
	H	H	ER

REVISIONS		
CHK	CHANGE NO.	REV.

(AMX, EALU HI (SLOT 5)

TITLE	SIZE	CODE	NUMBER	REV.
FRACTION PROC EXPON PATH (FXPJ)	D	CS	M8129-Ø-1	B
SCALE — SHEET 9 OF 15	DIST.			

DEC FORM NO. DRD 138

"THIS DRAWING AND SPECIFICATIONS, HEREIN, ARE THE PROPERTY OF DIGITAL EQUIPMENT CORPORATION AND SHALL NOT BE REPRODUCED OR COPIED OR USED IN WHOLE OR IN PART AS THE BASIS FOR THE MANUFACTURE OR SALE OF ITEMS WITHOUT WRITTEN PERMISSION.
COPYRIGHT © 1975 DIGITAL EQUIPMENT CORPORATION"

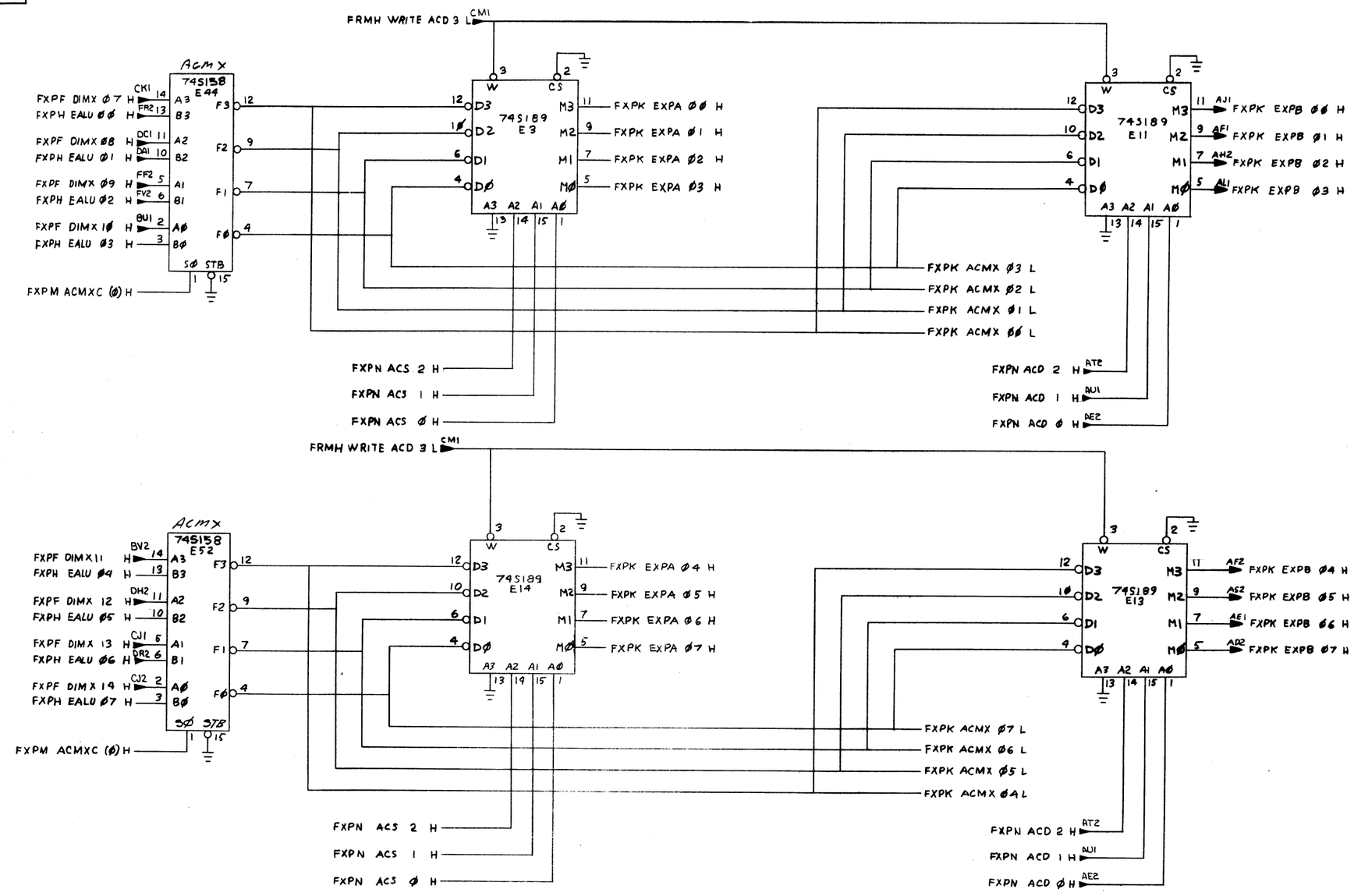

REVISIONS		
CHK	CHANGE NO.	REV.

(EXP SCRATCH PADS (SLOT 5)

TITLE FRACTION PROC (FXPK) EXPON. PATH

SIZE D | CODE CS | NUMBER M8129-Ø-1 | REV. B

SCALE — | SHEET 10 OF 15 | DIST.

DEC FORM NO. DRD 138

"THIS DRAWING AND SPECIFICATIONS, HEREIN, ARE THE PROPERTY OF DIGITAL EQUIPMENT CORPORATION AND SHALL NOT BE REPRODUCED OR COPIED OR USED IN WHOLE OR IN PART AS THE BASIS FOR THE MANUFACTURE OR SALE OF ITEMS WITHOUT WRITTEN PERMISSION.
COPYRIGHT © 1975" DIGITAL EQUIPMENT CORPORATION"

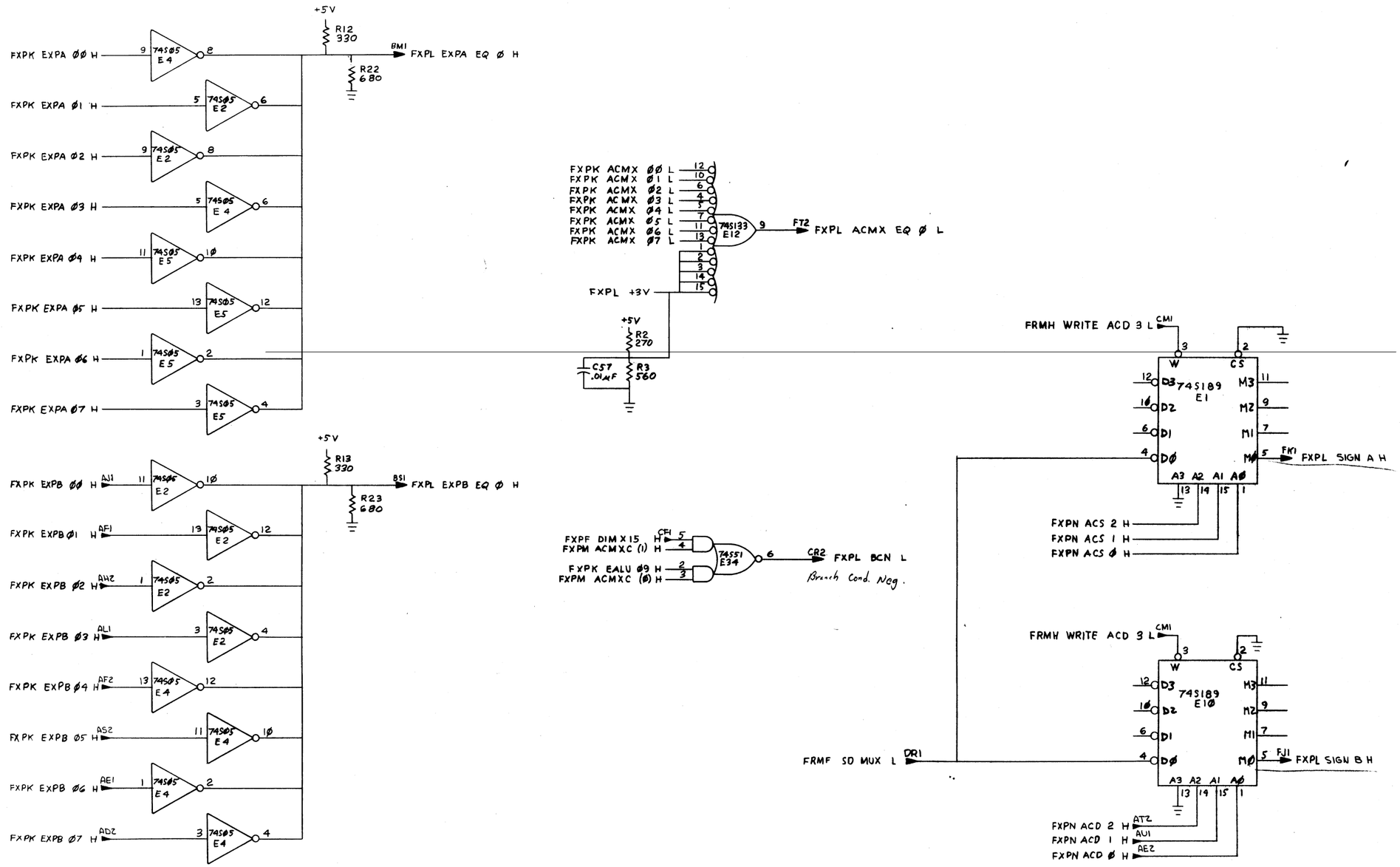

REVISIONS		
CHK	CHANGE NO.	REV.

(ZERO CHECKERS, SIGNS) (SLOT 5)

TITLE FRACTION PROC. EXPON PATH (FXPL)

SIZE D CODE CS NUMBER M8129-Ø-1 REV. B

SCALE — SHEET 11 OF 15 DIST.

DEC FORM NO. DRD 138

"THIS DRAWING AND SPECIFICATIONS, HEREIN, ARE THE PROPERTY OF DIGITAL EQUIPMENT CORPORATION AND SHALL NOT BE REPRODUCED OR COPIED OR USED IN WHOLE OR IN PART AS THE BASIS FOR THE MANUFACTURE OR SALE OF ITEMS WITHOUT WRITTEN PERMISSION.
COPYRIGHT © 1975 DIGITAL EQUIPMENT CORPORATION"

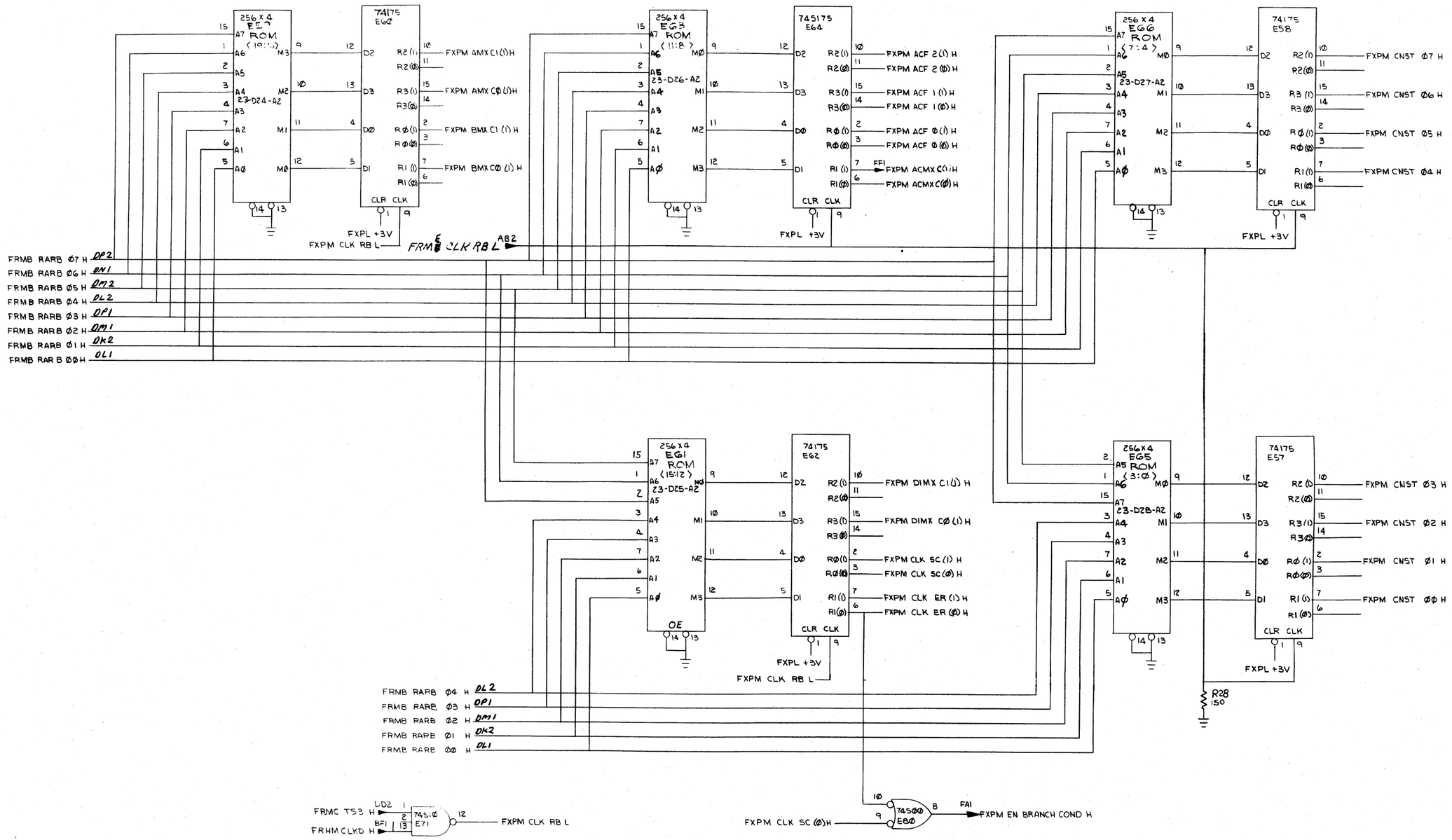

REVISIONS		
CHK	CHANGE NO.	REV.

(CONTROL ROM (SLOT 5)

TITLE	SIZE	CODE	NUMBER	REV.
FRACTION (FXPM) PROC EXPON. PATH	D	CS	M8129-0-1	B
SCALE —	SHEET 12 OF 15	DIST.		

DEC FORM NO. DRD 138

"THIS DRAWING AND SPECIFICATIONS, HEREIN, ARE THE PROPERTY OF DIGITAL EQUIPMENT CORPORATION AND SHALL NOT BE REPRODUCED OR COPIED OR USED IN WHOLE OR IN PART AS THE BASIS FOR THE MANUFACTURE OR SALE OF ITEMS WITHOUT WRITTEN PERMISSION.
COPYRIGHT © 1975 DIGITAL EQUIPMENT CORPORATION"

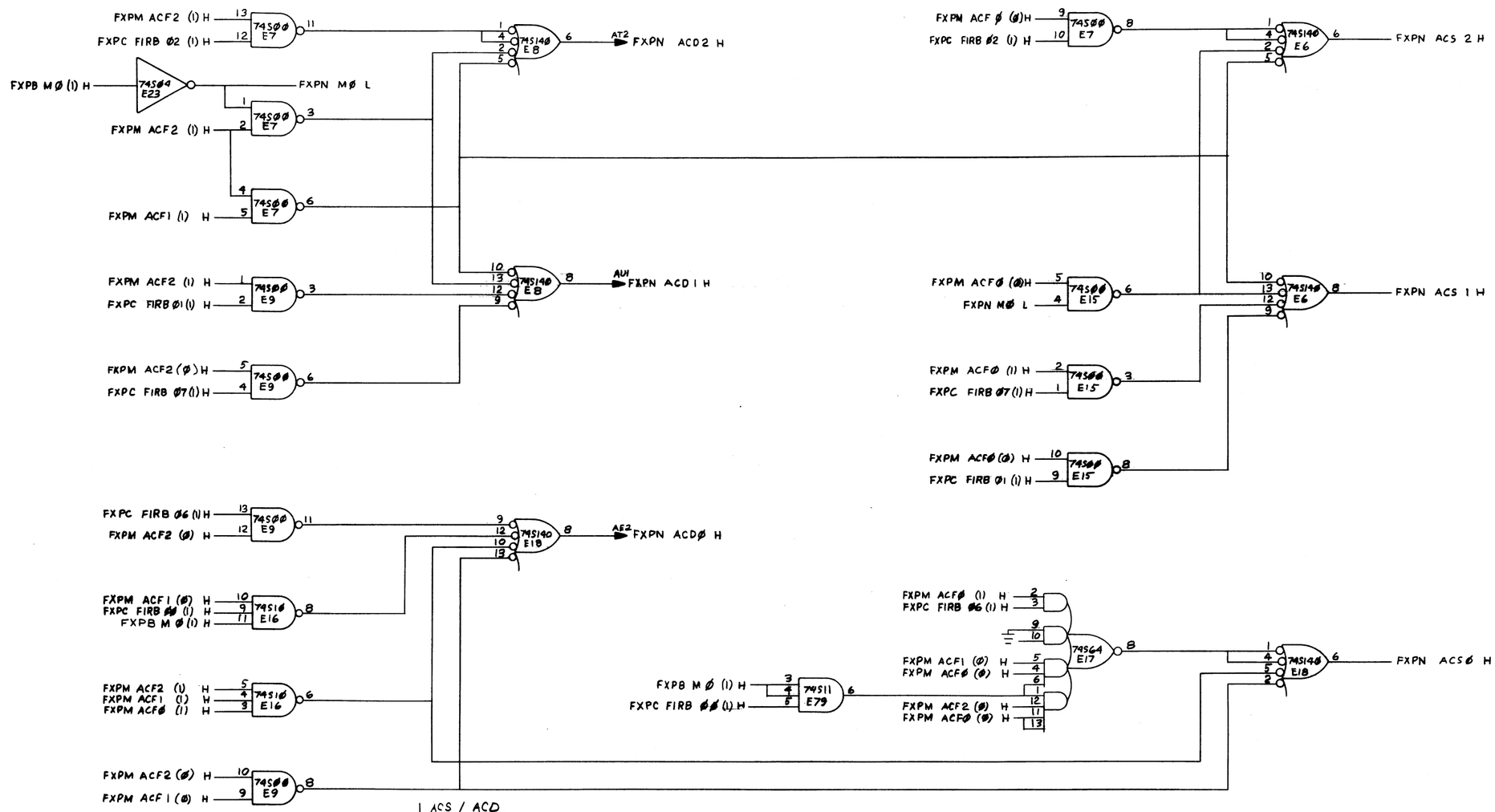

ACF	ACS / ACD EXPA / EXPB
Ø	X
1	ACDV1 / ACDV1
2	ACS / ACD
3	ACD / ACD
4	ACS / ACS
5	ACD / ACS
6	AC6 / AC6
7	AC7 / AC7

ACD = FIRØ7 , FIRØ6

ACS = FIRB(2:Ø) IF MØ
AC6 IF ~MØ

(ACCUMULATOR ADDRESS (SLOT 5)

REVISIONS		
CHK	CHANGE NO.	REV.

TITLE FRACTION (FXPN) PROC EXPON PATH
SIZE D CODE CS NUMBER M8129-Ø-1 REV. B
SCALE — SHEET 13 OF 15 DIST.

DEC FORM NO. DRD 138

"THIS DRAWING AND SPECIFICATIONS, HEREIN, ARE THE PROPERTY OF DIGITAL EQUIPMENT CORPORATION AND SHALL NOT BE REPRODUCED OR COPIED OR USED IN WHOLE OR IN PART AS THE BASIS FOR THE MANUFACTURE OR SALE OF ITEMS WITHOUT WRITTEN PERMISSION.
COPYRIGHT © 1975 DIGITAL EQUIPMENT CORPORATION"

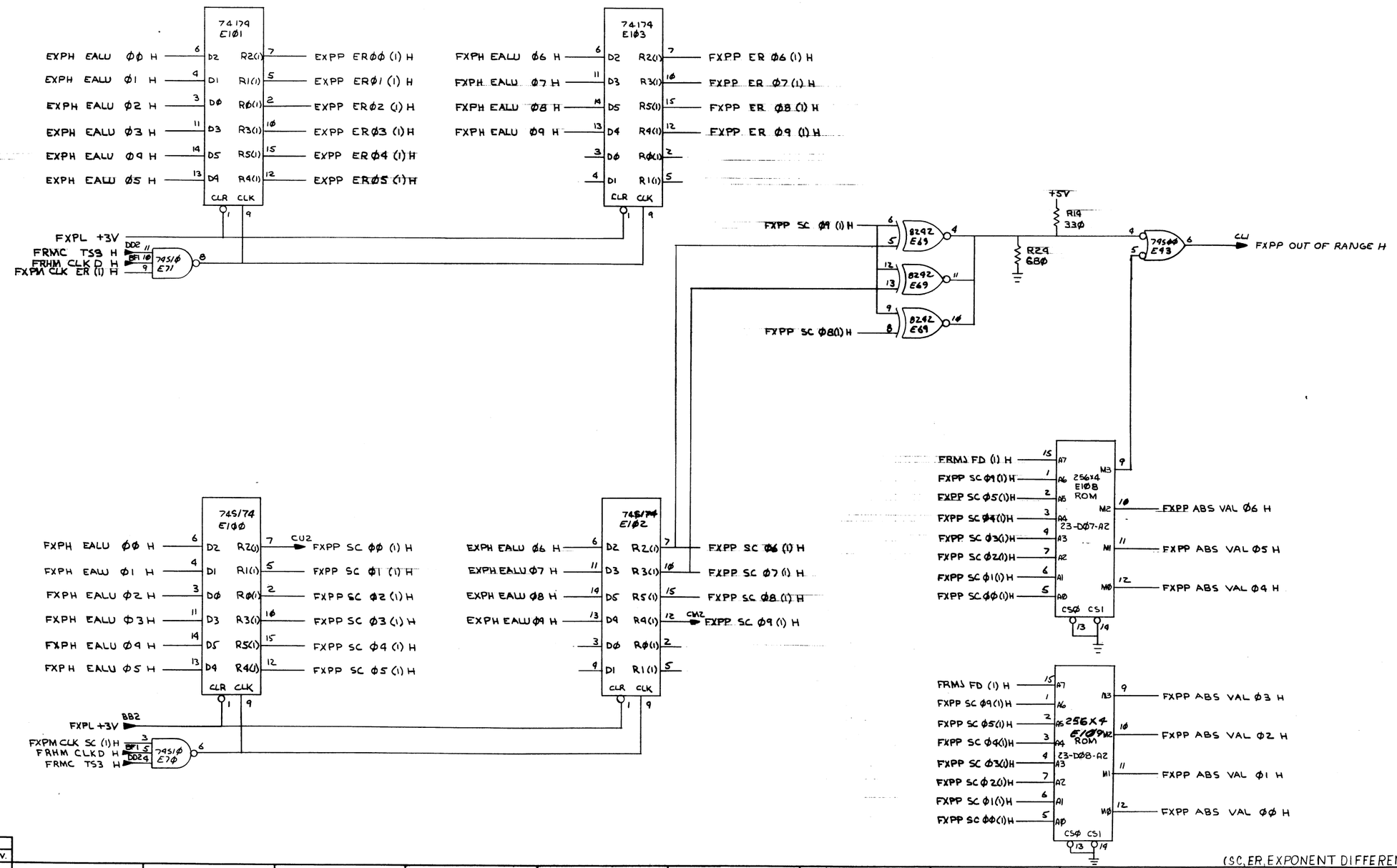

REVISIONS		
CHK	CHANGE NO.	REV.

(SC,ER,EXPONENT DIFFERENCE(SLOT 5)

TITLE FRACTION PROC EXPON PATH (FXPP)

SIZE D CODE CS NUMBER M8129-Ø-1 REV. B

SCALE —/— SHEET 14 OF 15 DIST.

DEC FORM NO. DRD 128

"THIS DRAWING AND SPECIFICATIONS, HEREIN, ARE THE PROPERTY OF DIGITAL EQUIPMENT CORPORATION AND SHALL NOT BE REPRODUCED OR COPIED OR USED IN WHOLE OR IN PART AS THE BASIS FOR THE MANUFACTURE OR SALE OF ITEMS WITHOUT WRITTEN PERMISSION. COPYRIGHT © 1975 ..."

IR DECODE #1 FxPB

	IL*MØ*FD ADRS	DATA	WL	IL*MØ*FD ADRS	DATA	WL	IL*MØ*FD ADRS	DATA	IL*MØ*FD ADRS	DATA	IL*MØ*FD ADRS	DATA	WL	IL*MØ*FD ADRS	DATA	WL	IL*MØ*FD ADRS	DATA	IL*MØ*FD ADRS	DATA
MUL	2	11	2	22	20	4	102	30	122	30	202	11	2	222	20	4	302	30	322	30
MOD	3	11	2	23	20	4	103	30	123	30	203	11	2	223	20	4	303	30	323	30
ADD	4	11	2	24	20	4	104	30	124	30	204	11	2	224	20	4	304	30	324	30
LOAD	5	12	2	25	21	4	105	30	125	30	205	12	2	225	21	4	305	30	325	30
SUB	6	11	2	26	20	4	106	30	126	30	206	11	2	226	20	4	306	30	326	30
CMP	7	11	2	27	20	4	107	30	127	30	207	11	2	227	20	4	307	30	327	30
STORE	10	13	2	30	13	4	110	30	130	30	210	13	2	230	13	4	310	30	330	30
DIV	11	11	2	31	20	4	111	30	131	30	211	11	2	231	20	4	311	30	331	30
STEXP	12	50	1	32	50	1	112	50	132	50	212	50	1	232	50	1	312	50	332	50
STCI	13	51	1	33	51	1	113	51	133	51	213	51	2	233	51	2	313	51	333	51
STCF	14	44	4	34	44	2	114	44	134	44	214	44	4	234	44	2	314	44	334	44
LDEXP	15	15	1	35	15	1	115	30	135	30	215	15	1	235	15	1	315	30	335	30
LDCI	16	41	1	36	41	1	116	30	136	30	216	41	2	236	41	2	316	30	336	30
LDCF	17	17	3	37	17	2	117	30	137	30	217	17	3	237	17	2	317	30	337	30
LDFPS	41	22	1	61	22	1	141	30	161	30	241	22	1	261	22	1	341	30	361	30
STFPS	42	62	1	62	62	1	142	62	162	62	242	62	1	262	62	1	342	62	362	62
STST	43	24	2	63	24	2	143	54	163	54	243	24	2	263	24	2	343	54	363	54
CLR	44	25	2	64	25	4	144	30	164	30	244	25	2	264	25	4	344	30	364	30
TST	45	26	1	65	26	1	145	30	165	30	245	26	1	265	26	1	345	30	365	30
ABS	46	27	2	66	27	2	146	30	166	30	246	27	2	266	27	2	346	30	366	30
NEG	47	27	2	67	27	2	147	30	167	30	247	27	2	267	27	2	347	30	367	30
NO MEM CLASS	–			–			140	30	160	30	–			–			340	30	360	30

ADX ROM IR DECODE #2 FxPA

	IM FD*IL ADRS	DATA	IM*FD*IL ADRS	DATA	IM*FD*IL ADRS	DATA	IM*FD*IL ADRS	DATA	IM FD*IL ADRS	DATA	IM*FD*IL ADRS	DATA	IM*FD*IL ADRS	DATA	IM*FD*IL ADRS	DATA
MUL	2	4	42	4	102	10	142	10	202	2	242	2	302	2	342	2
MOD	3	4	43	4	103	10	143	10	203	2	243	2	303	2	343	2
ADD	4	4	44	4	104	10	144	10	204	2	244	2	304	2	344	2
LOAD	5	4	45	4	105	10	145	10	205	2	245	2	305	2	345	2
SUB	6	4	46	4	106	10	146	10	206	2	246	2	306	2	346	2
CMP	7	4	47	4	107	10	147	10	207	2	247	2	307	2	347	2
STORE	10	4	50	4	110	10	150	10	210	2	250	2	310	2	350	2
DIV	11	4	51	4	111	10	151	10	211	2	251	2	311	2	351	2
STEXP	12	2	52	2	112	2	152	2	212	2	252	2	312	2	352	2
STCI	13	2	53	4	113	2	153	4	213	2	253	2	313	2	353	2
STCF	14	10	54	10	114	4	154	4	214	2	254	2	314	2	354	2
LDEXP	15	2	55	2	115	2	155	2	215	2	255	2	315	2	355	2
LDCI	16	2	56	4	116	2	156	4	216	2	256	2	316	2	356	2
LDCF	17	10	57	10	117	4	157	4	217	2	257	2	317	2	357	2
LDFPS	21	2	61	2	121	2	161		221	2	261	2	321	2	361	2
STFPS	22	2	62	2	122	2	162		222	2	262	2	322	2	362	2
STST	23	4	63	4	123	4	163		223	2	263	2	323	2	363	2
CLR	24	4	64	4	124	10	164		224	2	264	2	324	2	364	2
TST	25	4	65	4	125	10	165		225	2	265	2	325	2	365	2
ABS	26	4	66	4	126	10	166		226	2	266	2	326	2	366	2
NEG	27	4	67	4	127	10	167		227	2	267	2	327	2	367	2

NOTE: FOR Mode 1, the chip select is disabled for constant of Ø

ABS Rom

FxPP

ADRS	ABS VAL	ADRS	ABS VAL	ADRS	ABS VAL	ADRS	ABS VAL	ADRS	ABS VAL	ADRS	ABS VAL
ØØØ	2ØØ	Ø54	ØØØ	13Ø	ØØØ	2Ø4	374	26Ø	32Ø	334	334
ØØ1	377	Ø55	ØØØ	131	ØØØ	2Ø5	373	261	317	335	335
ØØ2	376	Ø56	ØØØ	132	ØØØ	2Ø6	372	262	316	336	336
ØØ3	375	Ø57	ØØØ	133	ØØØ	2Ø7	371	263	315	337	337
ØØ4	374	Ø6Ø	ØØØ	134	ØØØ	21Ø	37Ø	264	314	34Ø	34Ø
ØØ5	373	Ø61	ØØØ	135	ØØØ	211	367	265	313	341	341
ØØ6	372	Ø62	ØØØ	136	ØØØ	212	366	266	312	342	342
ØØ7	371	Ø63	ØØØ	137	ØØØ	213	365	267	311	343	343
Ø1Ø	37Ø	Ø64	ØØØ	14Ø	ØØØ	214	364	27Ø	31Ø	344	344
Ø11	367	Ø65	ØØØ	141	ØØØ	215	363	271	ØØØ	345	345
Ø12	366	Ø66	ØØØ	142	ØØØ	216	362	272	ØØØ	346	346
Ø13	365	Ø67	ØØØ	143	ØØØ	217	361	273	ØØØ	347	347
Ø14	364	Ø7Ø	ØØØ	144	ØØØ	22Ø	36Ø	274	ØØØ	35Ø	35Ø
Ø15	363	Ø71	ØØØ	145	ØØØ	221	357	275	ØØØ	351	351
Ø16	362	Ø72	ØØØ	146	ØØØ	222	356	276	ØØØ	352	352
Ø17	361	Ø73	ØØØ	147	ØØØ	223	355	277	ØØØ	353	353
Ø2Ø	36Ø	Ø74	ØØØ	15Ø	35Ø	224	354	3ØØ	ØØØ	354	354
Ø21	357	Ø75	ØØØ	151	351	225	353	3Ø1	ØØØ	355	355
Ø22	356	Ø76	ØØØ	152	352	226	352	3Ø2	ØØØ	356	356
Ø23	355	Ø77	ØØØ	153	353	227	351	3Ø3	ØØØ	357	357
Ø24	354	1ØØ	ØØØ	154	354	23Ø	35Ø	3Ø4	ØØØ	36Ø	36Ø
Ø25	353	1Ø1	ØØØ	155	355	231	347	3Ø5	ØØØ	361	361
Ø26	352	1Ø2	ØØØ	156	356	232	346	3Ø6	ØØØ	362	362
Ø27	351	1Ø3	ØØØ	157	357	233	345	3Ø7	ØØØ	363	363
Ø3Ø	35Ø	1Ø4	ØØØ	16Ø	36Ø	234	344	31Ø	31Ø	364	364
Ø31	ØØØ	1Ø5	ØØØ	161	361	235	343	311	311	365	365
Ø32	ØØØ	1Ø6	ØØØ	162	362	236	342	312	312	366	366
Ø33	ØØØ	1Ø7	ØØØ	163	363	237	341	313	313	367	367
Ø34	ØØØ	11Ø	ØØØ	164	364	24Ø	34Ø	314	314	37Ø	37Ø
Ø35	ØØØ	111	ØØØ	165	365	241	337	315	315	371	371
Ø36	ØØØ	112	ØØØ	166	366	242	336	316	316	372	372
Ø37	ØØØ	113	ØØØ	167	367	243	335	317	317	373	373
Ø4Ø	ØØØ	114	ØØØ	17Ø	37Ø	244	334	32Ø	32Ø	374	374
Ø41	ØØØ	115	ØØØ	171	371	245	333	321	321	375	375
Ø42	ØØØ	116	ØØØ	172	372	246	332	322	322	376	376
Ø43	ØØØ	117	ØØØ	173	373	247	331	323	323	377	377
Ø44	ØØØ	12Ø	ØØØ	174	374	25Ø	33Ø	324	324		
Ø45	ØØØ	121	ØØØ	175	375	251	327	325	325		
Ø46	ØØØ	122	ØØØ	176	376	252	326	326	326		
Ø47	ØØØ	123	ØØØ	177	377	253	325	327	327		
Ø5Ø	ØØØ	124	ØØØ	2ØØ	2ØØ	254	324	33Ø	33Ø		
Ø51	ØØØ	125	ØØØ	2Ø1	377	255	323	331	331		
Ø52	ØØØ	126	ØØØ	2Ø2	376	256	322	332	332		
Ø53	ØØØ	127	ØØØ	2Ø3	375	257	321	333	333		

IR DECODE #2 FxPC

NO MEM DECODE

	MØ+1*ILL AC ADRS	DATA	MØ+1*ILL AC ADRS	DATA	MØ+1*ILL AC ADRS	DATA
MUL	322	61	122	61	22	52
MOD	323	61	123	61	23	52
ADD	324	65	124	65	24	52
LOAD	325	42	125	42	25	52
SUB	326	65	126	65	26	52
CMP	327	67	127	67	27	52
STORE	330	43	130	43	30	52
DIV	331	73	131	73	31	52
STEXP	332		132		32	
STCI	333		133		33	
STCF	334	35	134	35	34	32
LDEXP	335	45	135	45	35	45
LDCI	336	40	136	40	36	40
LDCF	337	46	137	46	37	52
LDFPS	361	60	161	60	61	60
STFPS	362		162		62	
STST	363		163		63	
CLR	364	55	164	55	64	
TST	365	56	165	56	65	
ABS	366	57	166	57	66	
NEG	367	57	167	57	67	
CFCC			140	3		
SETF			141	33		
SETI			142	33		
LDUB			143	34		
MSN			144	37		
STAØ			145	36		
STQØ			147		47	53
SETD			151	33		
SETL			152	33		

TITLE	SIZE	CODE	NUMBER	REV.
FRACTION PROC EXPON PATH (FXPR)	D	CS	M8129-Ø-1	B
SCALE	SHEET 15 OF 15	DIST.		

DIGITAL EQUIPMENT CORPORATION
MAYNARD, MASSACHUSETTS

PARTS LIST

MADE BY D. HEALY	CHECKED D. HEALY	SECTION 1
DATE 12/15/75	DATE 12/15/75	
ENG Thomas A. Hoe	PROD Don Weaver	ISSUED SECT. 1
DATE 12/22/75	DATE 12-22-75	

ITEM NO.	DWG NO./PART NO.	DESCRIPTION	QUANTITY/VARIATION
	ZR112-RZ	PDP/11-45-55-7Ø FP11-C DIAGNOSTIC	1
		(DOCUMENT ONLY KIT)	

TITLE	ASSY NO.	SIZE	CODE	NUMBER	REV.	ECO NO.
SOFTWARE LIST FP11-C	NONE	A	PL	FP11-C-3		
	SHEET 1 OF 1	DIST.				

DEC FORM DRA 110 DEC 16-(325)-1031-N870

DIGITAL EQUIPMENT CORPORATION
MAYNARD, MASSACHUSETTS

PARTS LIST

MADE BY D. HEALY DATE 12/16/75	CHECKED D. HEALY DATE 12/16/75	SECTION 1
ENG Thomas A. Vo DATE 12/22/75	PROD Don Weaver DATE 12-22-75	ISSUED SECT. 1

ITEM NO.	DWG NO./PART NO.	DESCRIPTION	QUANTITY/VARIATION FP11-C
	EK-FP11C-MM	FLOATING POINT PROC MAINT. MANUAL	1

TITLE	ASSY NO.	SIZE	CODE	NUMBER	REV.	ECO NO.
SHIPPING LIST FP11-C	NONE	A	PL	FP11-C-4		
	SHEET 1 OF 1	DIST.				

DEC FORM DEC 16-(325)-1031-N870
DRA 110

This document contains confidential proprietary information of DEC. This information shall not be disclosed to persons outside the employ of DEC, except by DEC personnel so authorized by DEC, and only for use by such other persons in the design, production or manufacture of products for DEC.
Copyright © Digital Equipment Corporation.

DIGITAL EQUIPMENT CORPORATION
MAYNARD, MASSACHUSETTS

ENGINEERING SPECIFICATION

DATE 15 DEC 75

TITLE FP11-C INSTALLATION AND ACCEPTANCE PROCEDURE

REVISIONS

REV	DESCRIPTION	CHG NO	ORIG	DATE	APPD BY	DATE

ENG	APPD	SIZE	CODE	NUMBER	REV
Thomas A. Hoy 12/16/75		A	SP	FP11-C-5	

EQUIPMENT REQUIRED

1. 11/70 MA (115V), 11/70 MB (230V), 11/45, 11/50, or 11/55
2. FP11-C Floating Point Processor

TEST EQUIPMENT REQUIRED

1. Oscilloscope, Tektronix 453 or equivalent
2. Digital Voltmeter (DVM)

INSTALLATION PROCEDURE

1. Run Processor diagnostic:

11/70	11/45
DEKQC	T-17
DEKBA	
DEKBB	

2. Verify that Processor into which FP11-C is to be installed is KB11-C (11/70) or KB11-D (11/45, 11/50, or 11/55).

   Quick verification is as follows:
   a. RAC module (slot 9) is M8123.
   b. There is continuity between backplane pins.
      11/70: E13R2 and CØ2R1, or
      11/45, 11/50, 11/55: E15R2 to CØ2R1

   NOTE: If the Processor is found not to be one of the above, it must be upgraded to accept the FP11-C. Upgrade kits (which include an FP11-C) are FP-45-CU (11/45) and FP-70-CU (11/70).

3. With system power off, install the floating point +5V regulator (H744), (included with the FP11-C), in the upper system bulk power supply regulator A position. (See Figure 1.) Connect the regulator by inserting the provided male mate-n-lock connector from the system power harness (P9 for 11/70, P17 for 11/45, 11/50, 11/55) into the female mate-n-lock receptacle on the regulator.

4. Apply power to the system and measure the voltage present at pin AØ2A2 of the Processor backplane. It should be between 5.0 and 5.3 volts. Adjust the regulator (position A) output, if necessary, to obtain the required voltage.

SIZE	CODE	NUMBER	REV
A	SP	FP11-C-5	

5. Remove power from the system.

6. Plug in the four FP11-C modules as follows:
   Slot 2 M8126
   Slot 3 M8127
   Slot 4 M8128
   Slot 5 M8129

7. Remove IRC module (M8132 for 11/70, 11/45, 11/50, 11/55) from the system. Verify board is rev. B or higher, and that jumper W1 has been removed from the board. If it has not been, remove it. Replace the module.

8. Turn on system power and, using the DVM, measure the voltage present at backplane pin AØ2A2. Adjust the regulator (position A) output until the voltage measured is +5.0V ± .05V.

9. Load and run each of the following diagnostics for the prescribed times:
   a. MAINDEC-11-DEFPA - 5 passes
   b. MAINDEC-11-DEFPB - 5 passes

   No error printouts should be experienced.

10. Run Processor diagnostics:

11/70	11/45
DEKQC	T17
DEKBA	
DEKBB	

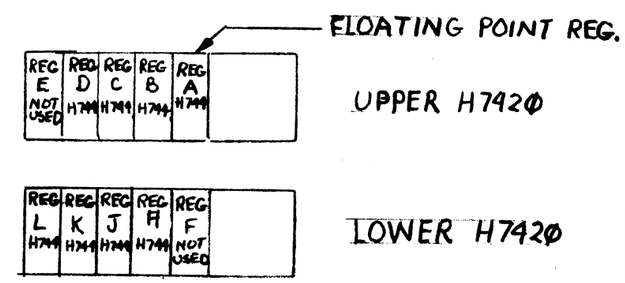

FIGURE 1 INSTALLATION OF FP11-C REGULATOR