"THE MATERIAL HEREIN IS FOR INFORMATION PURPOSES ONLY AND IS SUBJECT TO CHANGE WITHOUT NOTICE. DIGITAL EQUIPMENT CORPORATION ASSUMES NO RESPONSIBILITY FOR ANY ERRORS WHICH MAY APPEAR HEREIN."

FIELD MAINTENANCE PRINT SET

"THIS DRAWING AND SPECIFICATIONS, HEREIN, ARE THE PROPERTY OF DIGITAL EQUIPMENT CORPORATION AND SHALL NOT BE REPRODUCED OR COPIED OR USED IN WHOLE OR IN PART AS THE BASIS FOR THE MANUFACTURE OR SALE OF ITEMS WITHOUT WRITTEN PERMISSION. COPYRIGHT © 1976, DIGITAL EQUIPMENT CORPORATION."

TABLE OF CONTENTS

FIELD MAINTENANCE PRINT SET	
PDP11/55 (CPU)	B-TC-11/55-Ø-1
BASIC ASSY (11/55) (SHT.1,2)	B-DD-11/55-Ø
BASIC ASSY (11/55)	D-UA-11/55-Ø-Ø
BASIC ASSY (11/55) (P.L.)	C-PL-11/55-Ø-Ø
CONSOLE PHYSICAL LAYOUT	E-IA-5409684-Ø-Ø
CIRCUIT SCHEMATIC (CONSOLE)	D-CS-5409684-Ø-1
16 BIT PROCESSOR (COMPLETE SET)	B-DD-KB11-D
POWER SYSTEM CONFIGUATION	D-IC-11/45-Ø-1
11/45 BACK PANEL P.C. BOARD	D-IC-11/45-Ø-2
WIRE LIST (COMPLETE LIST)	D-WL-7009540-Ø-2
G772 OPTION HARNESS	E-IA-7009562-Ø-Ø
POWER CONTROL 861 (COMPLETE SET)	B-DD-861-Ø
POWER SUPPLY H7420 (COMPLETE SET)	B-DD-H742Ø-Ø
+5V REGULATOR(COMPLETE SET)	B-DD-H744-Ø
-15V REGUALTOR (COMPLETE SET)	B-DD-H745-Ø
+20V,-5V REGULATOR (COMPLETE SET)	B-DD-H754-Ø
11/55 SYSTEM PARTS LIST	C-PL-11/55-Ø-4
SHIPPING LIST 11/55	A-PL-11/55-Ø-3
STANDARD SYSTEM 11T55	B-DD-11T55-Ø
STANDARD SYSTEM 11T55	B-AR-11T55-Ø-Ø
SHIPPING LIST 11T55	A-PL-11T55-Ø-1

UNIT VARIATIONS COVERED BY THIS PRINT SET
11/55-CA
11/55-CB
11/55-CC
11/55-CD
11/55-CE
11/55-CF

11/55 VOL. I

Field Maintenance Print Set

Digital Equipment Corporation

PRINT SET ORDER NO.
MPØØØ39

REVISIONS	
REV.	
CHG. NO.	
DATE	

USED ON OPTION/MODEL	
11/55-BA	
11/55-BB	
11/55-BC	
11/55-BD	

SHEET I OF 1

DRN.	D.HEALY	DATE 2FEB76
CHK'D	D.HEALY	DATE 10/FEB/76
PROJ. ENG.	Verell Boon	DATE 18MAR76
FIELD SERV.	DAVE CARDOS	DATE 18MAR76

digital

TITLE: FIELD MAINTENANCE PRINT SET PDP11/55 (CPU)

SIZE	CODE	NUMBER	REV.
B	TC	11/55-Ø-1	

DIST.

EN-01124-16-N678-(327)

DRB 124

digital EQUIPMENT CORPORATION MAYNARD MASSACHUSETTS

DRAWING DIRECTORY

"THIS DRAWING AND SPECIFICATIONS, HEREIN, ARE THE PROPERTY OF DIGITAL EQUIPMENT CORPORATION AND SHALL NOT BE REPRODUCED OR COPIED OR USED IN WHOLE OR IN PART AS THE BASIS FOR THE MANUFACTURE OR SALE OF ITEMS WITHOUT WRITTEN PERMISSION. COPYRIGHT © 1976, DIGITAL EQUIPMENT CORPORATION"

~~CUSTOMER PRINT SET INDEX~~

~~THIS IS PRINT SET~~

SEQUENCE

SEQUENCE

NOTE:
FOR FIELD MAINTENANCE
PRINT SET REFER TO
B-TC-11/55-Ø-1 (CPU)
B-TC-11/55-Ø-2 (INTERNAL OPTIONS)

UNIT VARIATIONS

VAR	TITLE	PRINT SET
11/55-CA	BASIC ASSY PDP11/55 115V	
11/55-CB	BASIC ASSY PDP11/55 230V	
11/55-CC	BASIC ASSY PDP11/55 115V	
11/55-CD	BASIC ASSY PDP11/55 230V	
11/55-CE	BASIC ASSY PDP11/55 115V	
11/55-CF	BASIC ASSY PDP11/55 230V	

REVISIONS		
REV	CHG. NO.	DATE
A	11/55-1	6-76

USED ON OPTION/MODEL	
11/55-BA	
11/55-BB	
11/55-BC	
11/55-BD	

SHEET 1 OF 6

DRN. R. BEASLEY	DATE 6 FEB 76	TITLE BASIC ASSY PDP11/55
CHK'D. D. HEALY	DATE 9 FEB 76	
PROJ ENG. Verell Boon	DATE 12 FEB 76	
PROD. J Bornstein	DATE 12 MAR 76	SIZE B · CODE DD · NUMBER 11/55-0 · REV A
~~FIELD SERV.~~	~~DATE~~	DIST

EN-01062-1A-16-R972-(325)

DRB 106

1 — BASIC ASSY
PDP11/55
D-UA-11/55-0-0
C-PL-11/55-0-0

2 — 16 BIT PROCESSOR
B-DD-KB11-D

3 — BIPOLAR CONTROLLER
B-DD-MS11-C

4 — BIPOLAR MATRIX
BOARD
B-DD-MS11-A

5 — 16 K CORE MEMORY
B-DD-MF11-U

6 — MEMORY MANAGEMENT
B-DD-KT11-CD

* 7 — RESTART LOADER
B-DD-BM873-Ø

* 8 — LINE TIME CLOCK
B-DD-KW11-L

* 9 — ASYNCHRONOUS LINE
INTERFACE
B-DD-DL11-Ø

* 10 — DEC WRITER II
B-DD-LA36-Ø

11 — ETCH BOARD ASSY
(11/45 CONSOLE)
E-IA-5409684-0-0

12 — CABINET ASSY
(PDP11)
D-UA-H96Ø-C-Ø
D-DI-H96Ø-C-1

13 — CONTROL POWER
861
B-DD-861-0

14 — POWER SUPPLY
H742Ø
B-DD-H742Ø-Ø

15 — +5V REGULATOR
B-DD-H744-Ø

16 — -15V REGULATOR
B-DD-H745-Ø

17 — POWER HARNESS
J-IA-7009540-0-0

18 — H95Ø-Q 19" COVER
PANEL (10½)
D-UA-H95Ø-Q-Ø
D-DI-H95Ø-Ø-1

19 — MOUNTING BOX ASSY
B-DD-BA11-F

20 — PANEL, INDICATOR
D-IA-7409271-0-0

21 — BEZEL 11/45
E-PS-1210710-0-0

22 — +20V, -5V REGULATOR
B-DD-H754-Ø

* 23 — ASYNCHRONOUS
INTERFACE
B-DD-DL11-W
A-PL-DL11-W

* 24 — RESTART LOADER
B-DD-M93Ø1-YB
A-PL-M93Ø1-YB

* OPTION

TITLE		SIZE	CODE	NUMBER	REV
BASIC ASSY PDP11/55	SHEET 2 OF 6	B	DD	11/55-0	A

DRB 107
DEC 16 - (325) - 1062 - 3 - N875

This drawing and specifications, herein, are the property of Digital Equipment Corporation and shall not be reproduced or copied or used in whole or in part as the basis for the manufacture or sale of items without written permission. © 1976

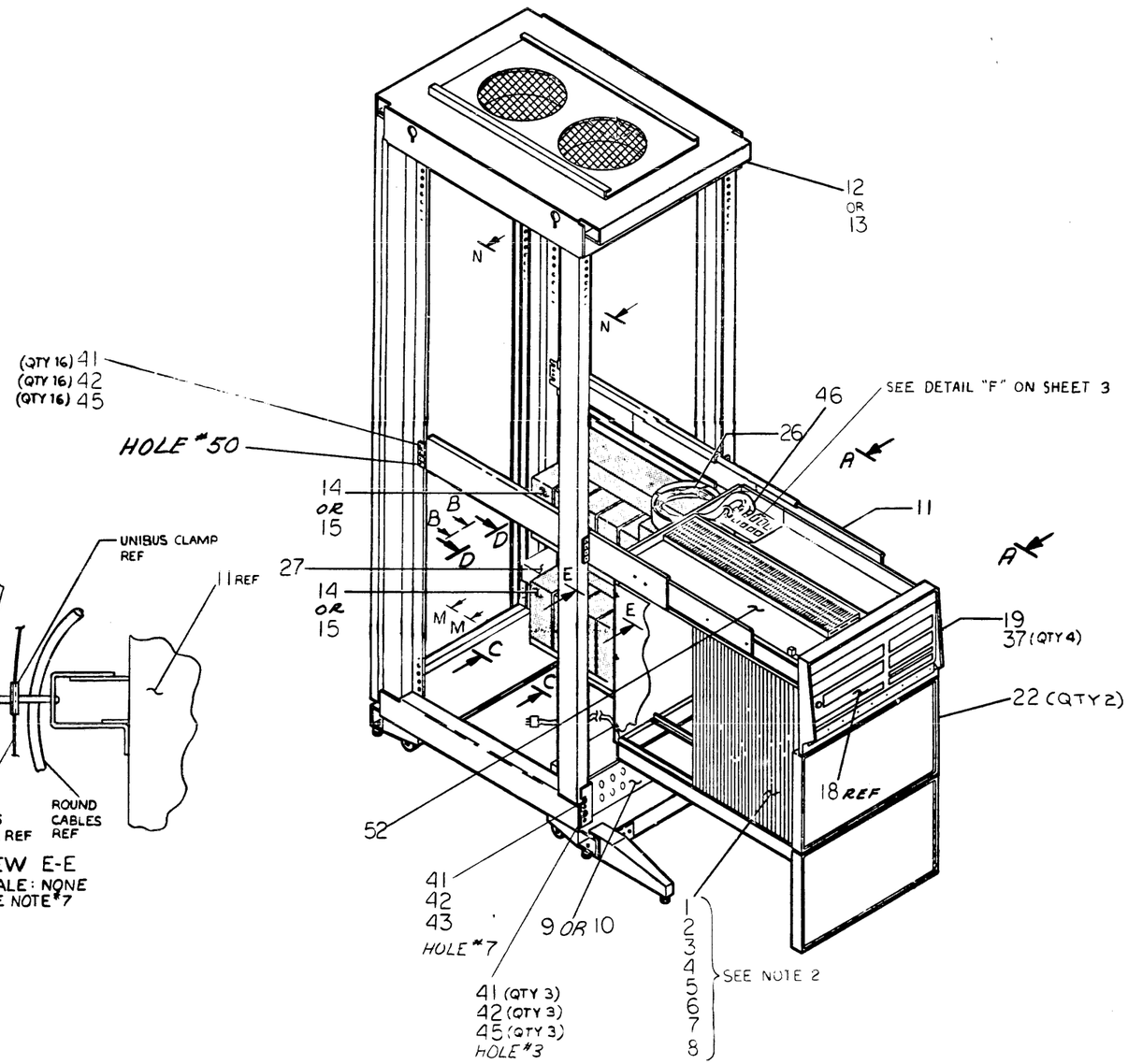

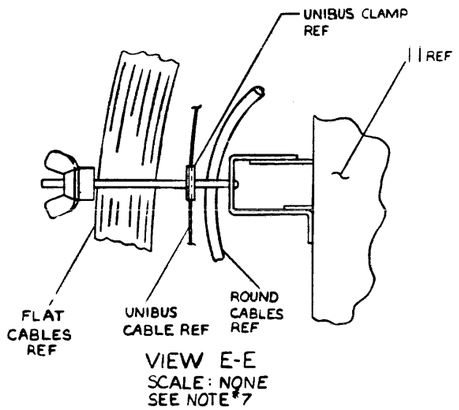

VIEW E-E
SCALE: NONE
SEE NOTE #7

NOTES:

1. IN SYSTEMS CONFIGURATION, SEPARATE PARALLEL BC11-A UNIBUS CABLES WITH .12 IN. GRAY FOAM TAPE DEC #9006881.
2. ITEM'S # 2 THRU # 8 NOT SHOWN.
3. USE CABLE GUIDE (P/N 1212064) WHERE NECESSARY.
4. THE UPPER H7420 TO BE PLUGGED INTO THE SWITCHED CIRCUIT 2, AND THE LOWER H7420 TO BE PLUGGED INTO THE UNSWITCHED CIRCUIT 1. THE CABINET FANS MUST BE PLUGGED INTO UNSWITCHED CIRCUIT 1. THE REMAINING LOADS ARE TO BE BALANCED BETWEEN CIRCUIT 1 AND CIRCUIT 2 SELECTING SWITCHED OR UNSWITCHED AS APPROPRIATE.
5. ALL LOOSE CONNECTORS ON THE MAIN-POWER HARNESS (P/N 7009540) WHICH ARE NOT IN USE DUE TO THE LACK OF ONE OR MORE REGULATORS, ARE TO BE INSERTED INTO AN 8 PIN MATE-N-LOCK CONNECTOR, ITEM #66, AND THE CONNECTOR IS TO BE SECURED TO THE H7420 POWER SUPPLY USING ITEM'S #64 & #39 OR IN THE CASE OF EXTRA PLUGS FOR THE +20 V REGULATORS, SECURE LOOSE PLUGS TO THE POWER HARNESS USING ITEM #46.
6. SCRAPE PAINT FROM GROUND MTG HOLE INDICATED IN CAB UPRIGHT-4 PLACES FOR MTG ITEM #62 GROUND STRAPS.
7. **WHEN MTG CABLES IN THE CABLE CLAMP THEY SHALL BE MTD AGAINST CLAMP WALL IN THIS ORDER ONLY. ROUND CABLES FIRST, UNIBUS CABLES SECOND & FLAT CABLES LAST. ANY DEVIATION COULD CAUSE FRACTURE OF UNIBUS CABLE. (SEE VIEW E-E).**

REVISIONS			
CHR	CHANGE NO.	REV	
2.9	11/55 00001	A	D. Bradley 21 JUNE 76 V. BOAEN Russell Brown #2 July 76

FIRST USED ON OPTION/MODEL: PDP11/55	QTY.	DESCRIPTION: PARTS LIST	PART NO. / ITEM NO.
UNLESS OTHERWISE SPECIFIED DIMENSION IN INCHES TOLERANCES: DECIMALS .XXX = .005, .XX = .02, .X = .1; ANGLES ±0° 30'	DRN: C. Beasley DATE 11 FEB 76	CHK: D. Bradley DATE 11 FEB 76	EQUIPMENT CORPORATION MAYNARD MASSACHUSETTS
	ENG: Russell Brown DATE 12 FEB 76	MFG: Russell Brown DATE 12 FEB 76	TITLE: BASIC ASSY PDP11/55
REMOVE BURRS AND BREAK SHARP CORNERS SURFACE QUALITY ✓	PROD: C. Beasley DATE 12 FEB 76		
MATERIAL: SEE PARTS LIST	NEXT HIGHER ASSY.: B-DD-11/55-0		
FINISH	SCALE	SIZE: D CODE: UA NUMBER: 11/55-0-0	REV: A
	SHEET 1 OF 4	DIST	

DEC FORM 240 D3ED 1028-A

D UA 11/55-0-0 A

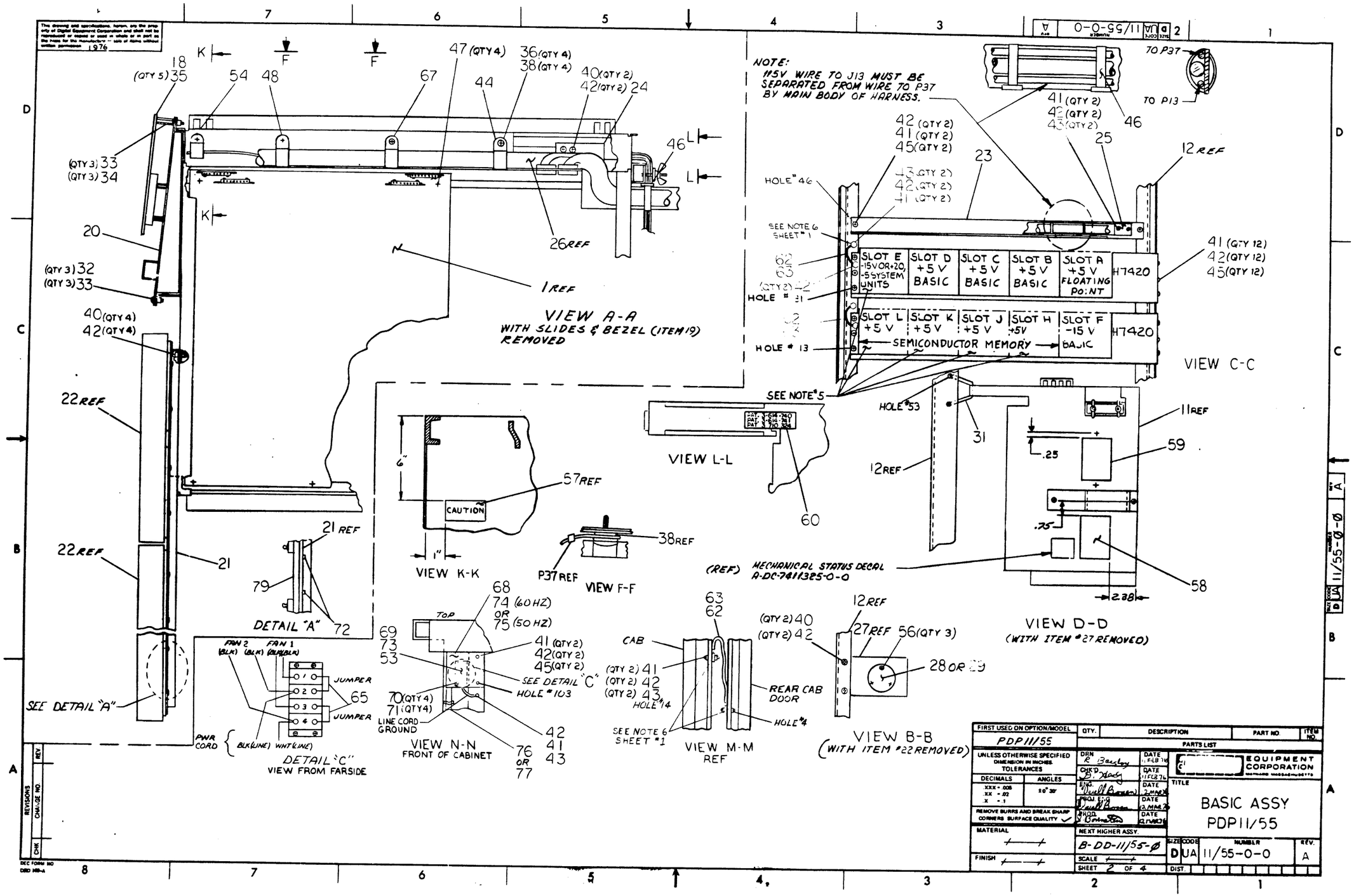

NOTE:
115V WIRE TO J13 MUST BE SEPARATED FROM WIRE TO P37 BY MAIN BODY OF HARNESS.
VIEW A-A
WITH SLIDES & BEZEL (ITEM 19) REMOVED
VIEW C-C
SLOT E -15V OR +20, -5 SYSTEM UNITS
SLOT D +5 V BASIC
SLOT C +5 V BASIC
SLOT B +5 V BASIC
SLOT A +5 V FLOATING POINT
H7420
SLOT L +5 V
SLOT K +5 V
SLOT J +5 V
SLOT H +5V
SLOT F -15 V BASIC
SEMICONDUCTOR MEMORY
VIEW L-L
VIEW K-K
CAUTION
VIEW F-F
VIEW D-D
(WITH ITEM #27 REMOVED)
(REF) MECHANICAL STATUS DECAL A-DC-7411325-0-0
DETAIL "A"
DETAIL "C"
VIEW FROM FARSIDE
VIEW N-N
FRONT OF CABINET
VIEW M-M
REF
VIEW B-B
(WITH ITEM #22 REMOVED)
SEE DETAIL "A"
SEE DETAIL "C"
SEE NOTE 6 SHEET #1
SEE NOTE #5
HOLE #46
HOLE #31
HOLE #13
HOLE #53
HOLE #103
HOLE #14
HOLE #4
TO P37
TO P13
JUMPER
PWR CORD
BLK(LINE) WHT(LINE)
LINE CORD GROUND
CAB
REAR CAB DOOR
FIRST USED ON OPTION/MODEL
PDP11/55
UNLESS OTHERWISE SPECIFIED DIMENSION IN INCHES. TOLERANCES
DECIMALS
ANGLES
REMOVE BURRS AND BREAK SHARP CORNERS SURFACE QUALITY
MATERIAL
FINISH
NEXT HIGHER ASSY.
B-DD-11/55-Ø
SCALE
SHEET 2 OF 4
QTY.
DESCRIPTION
PART NO.
ITEM NO.
PARTS LIST
DRN
CHK'D
ENG.
PROJ. ENG.
PROD.
DATE
EQUIPMENT CORPORATION
TITLE
BASIC ASSY
PDP11/55
SIZE
CODE
NUMBER
REV.
D
UA
11/55-0-0
A
DIST.
REVISIONS
CHANGE NO.
REV
CHK
DEC FORM NO
DBD 169-A

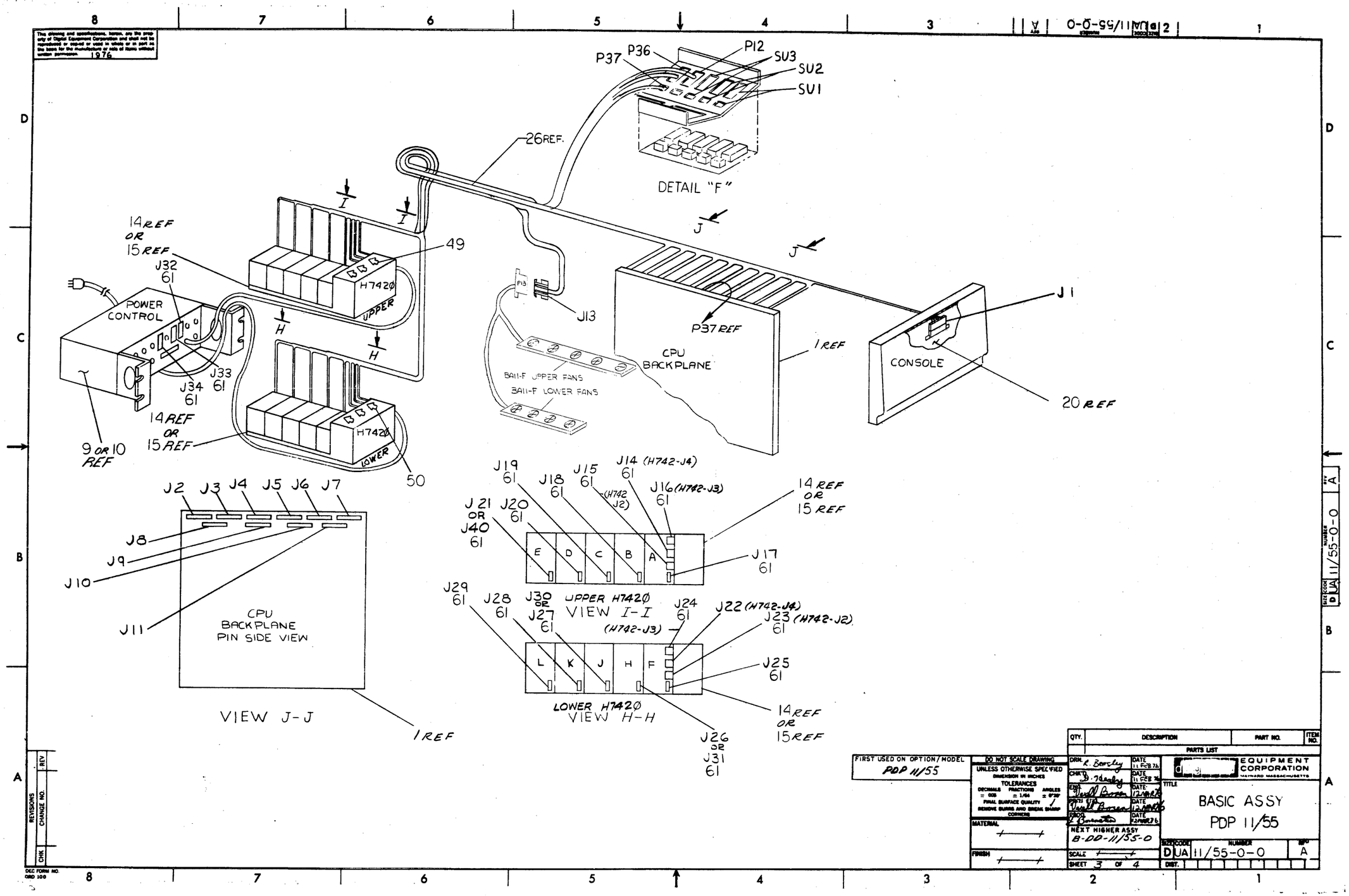

QTY.	DESCRIPTION	PART NO.	ITEM NO.
	PARTS LIST		

FIRST USED ON OPTION/MODEL: PDP 11/55

DO NOT SCALE DRAWING
UNLESS OTHERWISE SPECIFIED
DIMENSION IN INCHES
TOLERANCES
DECIMALS ± .005 FRACTIONS ± 1/64 ANGLES ± 0°30'
FINAL SURFACE QUALITY
REMOVE BURRS AND BREAK SHARP CORNERS

MATERIAL
FINISH

DRN. R. Beasley DATE 11 FEB 76
CHK'D. D. Healy DATE 11 FEB 76
ENG. Verell Bowen DATE 12 MAR 76
PROJ. ENG. Verell Bowen DATE 12 MAR 76
PROD. E. Bonnaten DATE 12 MAR 76

NEXT HIGHER ASSY B-DD-11/55-0

SCALE
SHEET 3 OF 4

EQUIPMENT CORPORATION
MAYNARD MASSACHUSETTS

TITLE
BASIC ASSY
PDP 11/55

SIZE D CODE UA NUMBER 11/55-0-0 REV A
DIST.

REVISIONS: REV | CHANGE NO. | CHK

DEC FORM NO. ORD 100

"THIS DRAWING AND SPECIFICATIONS, HEREIN, ARE THE PROPERTY OF DIGITAL EQUIPMENT CORPORATION AND SHALL NOT BE REPRODUCED OR COPIED OR USED IN WHOLE OR IN PART AS THE BASIS FOR THE MANUFACTURE OR SALE OF ITEMS WITHOUT WRITTEN PERMISSION
COPYRIGHT ©1976 DIGITAL EQUIPMENT CORPORATION"

WIRE TABLE #1

ITEM NO.	FROM HARNESS CONNECTION	TO CONNECTION
26	P1	J1
	P2	J2
	P3	J3
	P4	J4
	P5	J5
	P6	J6
	P7	J7
	P8	J8
	P9	J9
	P10	J10
	P11	J11
	P12	J12
	P13	J13
	P14	J14
	P15	J15
	P16	J16
	P17	J17
	P18	J18
	P19	J19
	P20	J20
	P21	J21 (E-H745)
	P22	J22
	P23	J23
	P24	J24
	P25	J25
	P26	J26
	P27	J27
	P28	J28
	P29	J29
	P30	J30
	P31	J31
	P32	J32
	P33	J33
	P34	ELAPSED TIME METER
	P35	ELAPSED TIME METER
	P36	J36
	P37	GND CH
	P38	GND CH
	P39	GND CH
26	P40	J40 (E-H754)

REGULATOR/HARNESS JUMPER CONFIG. FOR SEMICOND. MEMORY

MEMORY	BACK PANEL SLOT							REG SLOT				HARNESS TO BE CUT	REMARKS
BIPOLAR	17	18	19	20	22	23	24	25	H	J	K	L		
4K	B	–	–	–	–	–	–	+5	–	–	–	NONE	NONE
8K		B	–	–						–			NONE	
12K			B	–						+5			P5 - PINS 7-8	
16K				B	–						–		P5 - PINS 7-8	
20K					B	–					+5		P5 - PINS 3-4 & 7-8	
24K						B	–					–	P5 - PINS 3-4 & 7-8	
28K						B	B	–				+5	P5 - PINS 3-4 & 7-8, P6 - PINS 7-8	
32K	B	B	B	B	B	B	B	B	+5	+5	+5	+5	P5 - PINS 3-4 & 7-8, P6 - PINS 7-8	NONE

REVISIONS		
CHK	CHANGE NO.	REV

TITLE	SIZE	CODE	NUMBER	REV.
BASIC ASSY PDP11/55	D	UA	11/55-0-0	A
SCALE —// SHEET 4 OF 4	DIST.			

DEC FORM NO. DRD 127

THIS DRAWING AND SPECIFICATIONS, HEREIN ARE THE PROPERTY OF DIGITAL EQUIPMENT CORPORATION AND SHALL NOT BE REPRODUCED OR COPIED OR USED IN WHOLE OR IN PART AS THE BASIS FOR THE MANUFACTURE OR SALE OF ITEMS WITHOUT WRITTEN PERMISSION. COPYRIGHT ©1976 , DIGITAL EQUIPMENT CORPORATION

ITEM NO.	DWG. NO./PART NO.	DESCRIPTION	QUANTITY/VARIATIONS 11/55-CA	11/55-CB	11/55-CC	11/55-CD	11/55-CE	11/55-CF
1	A-PL-KB11-D-Ø	16 BIT PROCESSOR	1	1	1	1	1	1
2	A-PL-MS11-CC-Ø	BIPOLAR CONTROLLER	2	2	1	1	-	-
3	A-PL-MS11-AP-Ø	BIPOLAR MATRIX BOARD	8	8	4	4	-	-
4	D-UA-MF11-UP-Ø	16K CORE MEMORY	-	-	1	1	-	-
5	A-PL-KT11-CD-Ø	MEMORY MANAGEMENT	1	1	1	1	1	1
6	~~A-PL-BM873-YB-Ø~~	~~RESTART LOADER~~	~~1~~	~~1~~	~~1~~	~~1~~	~~1~~	~~1~~
7	~~C-UA-DJ[illegible]~~	~~ASYNCHRONOUS LINE INTERFACE~~	~~1~~	~~1~~	~~1~~	~~1~~	~~1~~	~~1~~
8	~~A-PL-KW[illegible]~~	~~LINE TIME CLOCK~~	~~1~~	~~1~~	~~1~~	~~1~~	~~1~~	~~1~~
9	E-UA-861-A-[illegible]	CONTROL POWER 115VAC	1	-	1	-	1	-
10	E-UA-861-B-Ø	CONTROL POWER 230VAC	-	1	-	1	-	1
11	E-UA-BA11-FA-Ø	MTG. BOX ASSY	1	1	1	1	1	1
12	D-UA-H96Ø-CD-Ø	CABINET ASSY (PDP-11)	1	-	1	-	1	-
13	D-UA-H96Ø-CE-Ø	CABINET ASSY (PDP-11)	-	1	-	1	-	1
14	E-UA-H742Ø-A-Ø	POWER SUPPLY H742ØA, 120VAC	2	-	2	-	2	-
15	E-UA-H742Ø-B-Ø	POWER SUPPLY, H742ØB 240VAC	-	2	-	2	-	2
16	E-UA-H744-0-0	+5V REGULATOR	3	3	3	3	3	3
17	E-UA-H745-0-0	-15 REGULATOR	1	1	1	1	1	1
18	D-IA-7409271-4-0	PANEL, CONSOLE INDICATOR	1	1	1	1	1	1
19	E-PS-1210710-0-0	BEZEL	1	1	1	1	1	1
20	E-IA-5409684-0-0	ETCH BOARD ASSY (11/45 CONSOLE)	1	1	1	1	1	1
21	D-IA-7409289-0-0	MTG. BRKT. 10.50 PANEL	2	2	2	2	2	2
22	D-UA-H95Ø-QB-Ø	H95Ø-Q 19" COVER PANEL 10.50	2	2	2	2	2	2
23	D-MD-7409445-0-0	BRACKET, HARNESS SUPPORT	1	1	1	1	1	1
24	D-MD-7409446-0-0	SUPPORT, HARNESS	1	1	1	1	1	1
25	B-MD-7409447-0-0	PLATE, SUPPORT	1	1	1	1	1	1
26	J-IA-7009540-0-0	11/45 POWER HARNESS	1	1	1	1	1	1
27	D-IA-7409622-0-0	BRKT. METER MTG.	1	1	1	1	1	1
28	1201208	METER, ELAPSED TIME M1906, 120VAC	1	-	1	-	1	-
29	1202234	METER, ELAPSED TIME M1905, 240VAC	-	1	-	1	-	1
30	C-IA-7008864-0-0	INDICATOR CABLE	2	2	2	2	2	2
31	A-PL-7010865-0-0	BRACKET, SHIPPING	1	1	1	1	1	1
32	9006022-3	SCR PHL HD TRUSS 6-32 x .38	3	3	3	3	3	3
33	9006633	WASHER INTERNAL TOOTH #6	6	6	6	6	6	6
34	9009120-1	SPACER, HEX SPECIAL	3	3	3	3	3	3
35	9006404-2	SCR FLAT HD NYLON #6-32 x .38	5	5	5	5	5	5
36	9006037-3	SCR PHL HD TRUSS 8-32 x .38	4	4	4	4	4	4
37	9006022-1	SCR PHL HD PAN 6-32 x .38	4	4	4	4	4	4
38	9008072	WASHER, LOCK EXT TOOTH #8	4	4	4	4	4	4
39	9006563	NUTS, KEPS 8-32	5	5	5	5	5	5
40	9006071-3	SCR PHL HD TRUSS 10-32 x .38	8	8	8	8	8	8
41	9006073-3	SCR PHL HD TRUSS 10-32 x .50	43	43	43	43	43	43
42	9007651	WASHER, LOCK EXT. TOOTH #10	53	53	53	53	53	53
43	9006565	NUTS, KEPS 10-32	8	8	8	8	8	8

REVISIONS	REV.	CHK
CHANGE NO.	A	
11/55-00001		
P. Bowen 18 JUNE 76		
V. BOAEN		
Paul Bowen 22-July-76		

DRN. R. BEASLEY	4 FEB 76	FIRST USED ON 11/55
CHK'D D. HEALY	4 FEB 76	TITLE: BASIC ASSY PDP11/55
ENG. Paul Bowen	12 FEB 76	
PROJ. ENG. Paul Bowen	12 FEB 76	
PROD. J. Bonneau	12 MAR 76	
NEXT HIGHER ASSY. D-UA-11/55-0-0		SIZE C / CODE PL / NUMBER 11/55-0-0 / REV. A
SCALE		
SHEET 1 OF 2		DIST.

DEC FORM NO. DRC 110 A

THIS DRAWING AND SPECIFICATIONS, HEREIN ARE THE PROPERTY OF DIGITAL EQUIPMENT CORPORATION AND SHALL NOT BE REPRODUCED OR COPIED OR USED IN WHOLE OR IN PART AS THE BASIS FOR THE MANUFACTURE OR SALE OF ITEMS WITHOUT WRITTEN PERMISSION. COPYRIGHT © 1976, DIGITAL EQUIPMENT CORPORATION

ITEM NO.	DWG. NO./PART NO.	DESCRIPTION	QUANTITY/VARIATIONS 11/55-CA	11/55-CB	11/55-CC	11/55-CD	11/55-CE	11/55-CF
44	9007090	CLAMP, CABLE .88	1	1	1	1	1	1
45	9007786	NUT, TINNERMAN	35	35	35	35	35	35
46	9007880	TIE WRAP	A/R	A/R	A/R	A/R	A/R	A/R
47	9007988-8	SCR SOCKET HD CAP 8-32 x 1.00	4	4	4	4	4	4
48	9007087	CLAMP, CABLE .62	1	1	1	1	1	1
49	A-DC-5310049-0-0	DECAL, POWER SUPPLY	1	1	1	1	1	1
50	A-DC-5310048-0-0	DECAL, POWER SUPPLY	1	1	1	1	1	1
51	9007867	TIE MOUNT	A/R	A/R	A/R	A/R	A/R	A/R
52	A-PS-3613212-0-1	DECAL (KB11-D)	1	1	1	1	1	1
53	9007928	CONN. SOLDERLESS	3	3	3	3	3	3
54	9007083	CLAMP, CABLE .38	A/R	A/R	A/R	A/R	A/R	A/R
55	9008881	TAPE, FOAM, GRAY .12 x 1.19	A/R	A/R	A/R	A/R	A/R	A/R
56	9009236	SCR SELF TAP 4-40 x .31	3	3	3	3	3	3
57	A-DC-7411170-0-0	BACK PANEL CAUTION DECAL	1	1	1	1	1	1
58	A-DC-5310710-0-0	DECAL 11/45 - 11/50 REG. CONF. B	1	1	1	1	1	1
59	A-DC-5310709-0-0	DECAL, 11/45 - 11/50 REG. CONF. A	1	1	1	1	1	1
60	A-DC-7409478-0-0	DECAL, PATENT	1	1	1	1	1	1
61	A-DC-7409873-0-0	DECAL J1-J4Ø WHITE ON CLR	A/R	A/R	A/R	A/R	A/R	A/R
62	9006990	GROUND STRAP	3	3	3	3	3	3
63	9107246	.50" TUBING	18"	18"	18"	18"	18"	18"
64	9006037-1	SCR. PHL. PAN HD. 8-32 x .38	5	5	5	5	5	5
65	9009002	CINCH JONES JUMPER	2	2	2	2	2	2
66	1209340	8 PIN MATE-N-LOCK CONN.	7	7	7	7	7	7
67	9007089	CLAMP CABLE .75	1	1	1	1	1	1
68	C-MD-7407607-0-0	PLATE JONES STRIP	1	1	1	1	1	1
69	9006899	CINCH JONES TERMINAL STRIP	1	1	1	1	1	1
70	9006025-1	SCR. PHL. PAN HD. 6-32 x .62	4	4	4	4	4	4
71	9006560	NUT, KEPS #6-32	4	4	4	4	4	4
72	9006071-2	SCR PHL. FLAT HD. 10-32 x .38	16	16	16	16	16	16
73	9007929	CONN. SOLDERLESS	4	4	4	4	4	4
74	100104-1	DECAL 115 VAC WHITE ON CLR.	1	-	1	-	1	-
75	100104-7	DECAL 230 VAC WHITE ON CLR.	-	1	-	1	-	1
76	1700006-9	LINE CORD 115V	1	-	1	-	1	-
77	1700016-9	LINE CORD 230V	-	1	-	1	-	1
78	1212064	CABLE GUIDE	1	1	1	1	1	1
79	A-PS-1209224-0-0	LATCH, MOLDING	8	8	8	8	8	8
80	9007649	WASHER, LOCK EXT. TOOTH #6	4	4	4	4	4	4
81	E-UA-H754-0-0	+20V, -5V REGULATOR	1	1	1	1	1	1
82	A-PL-M9301-YB	RESTART LOADER	1	1	1	1	1	1
83	A-PL-DL11-W	ASYNC. INTERFACE, LINE CLOCK	1	1	1	1	1	1
84	D-IA-700836Ø-Ø	DL11-W CABLE	1	1	1	1	1	1

REVISIONS | REV. | CHANGE NO. | CHK

DRN. R. BEASLEY	4 FEB 76	FIRST USED ON 11/55
CHK'D D. HEALY	4 FEB 76	digital
ENG.	4 FEB 76	TITLE
PROJ. ENG.	4 FEB 76	BASIC ASSY PDP11/55
PROD.	12 MAR 76	
NEXT HIGHER ASSY.		
D-UA-11/55-0-0		SIZE C / CODE PL / NUMBER 11/55-0-0 / REV. A
SCALE		
SHEET 2 OF 2		DIST.

REV. A | NUMBER 11/55-0-0 | SIZE C | CODE PL

DEC FORM NO. DRC 110 A

KNOB LOCATIONS	
ITEM NO.	REFERENCE DESIGNATIONS
8	S1-S3, S7-S9, S13-S15, S20, S22, S24, S26, S28
40	S4-S6, S10-S12, S16-S18, S21, S23, S25, S27
41	S19

NOTES CONT.

3. IN ORDER TO GET THE PROPER ALIGNMENT BETWEEN ROTARY SWITCH #17 AND POWER LOCK #37, MOUNT ITEM #17 ON P.C. BOARD AND TURN SHAFT C CLOCKWISE (LEFT) TO STOP. MOUNT ITEM #37 TO SUPPORT BRACKET ITEM #5 WITH 'D' HOLE IN POSITION INDICATED. ROTATE KEY POSITION INDICATED AS B OF ITEM #37 TO LINE UP WITH KEY POSITION INDICATED AS A OF ITEM #37.

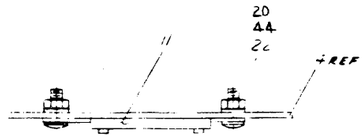

NOTE

1 AFTER ASSEMBLING ITEM #1 TO ITEM #2 TABS A ITEM #1 ARE TO BE TAPERED AS SHOWN IN VIEW AA

2 IN SETTING S26 FOR THE SHIFT KEY IS TO FLIP IT THE SWITCH HAS TO BE

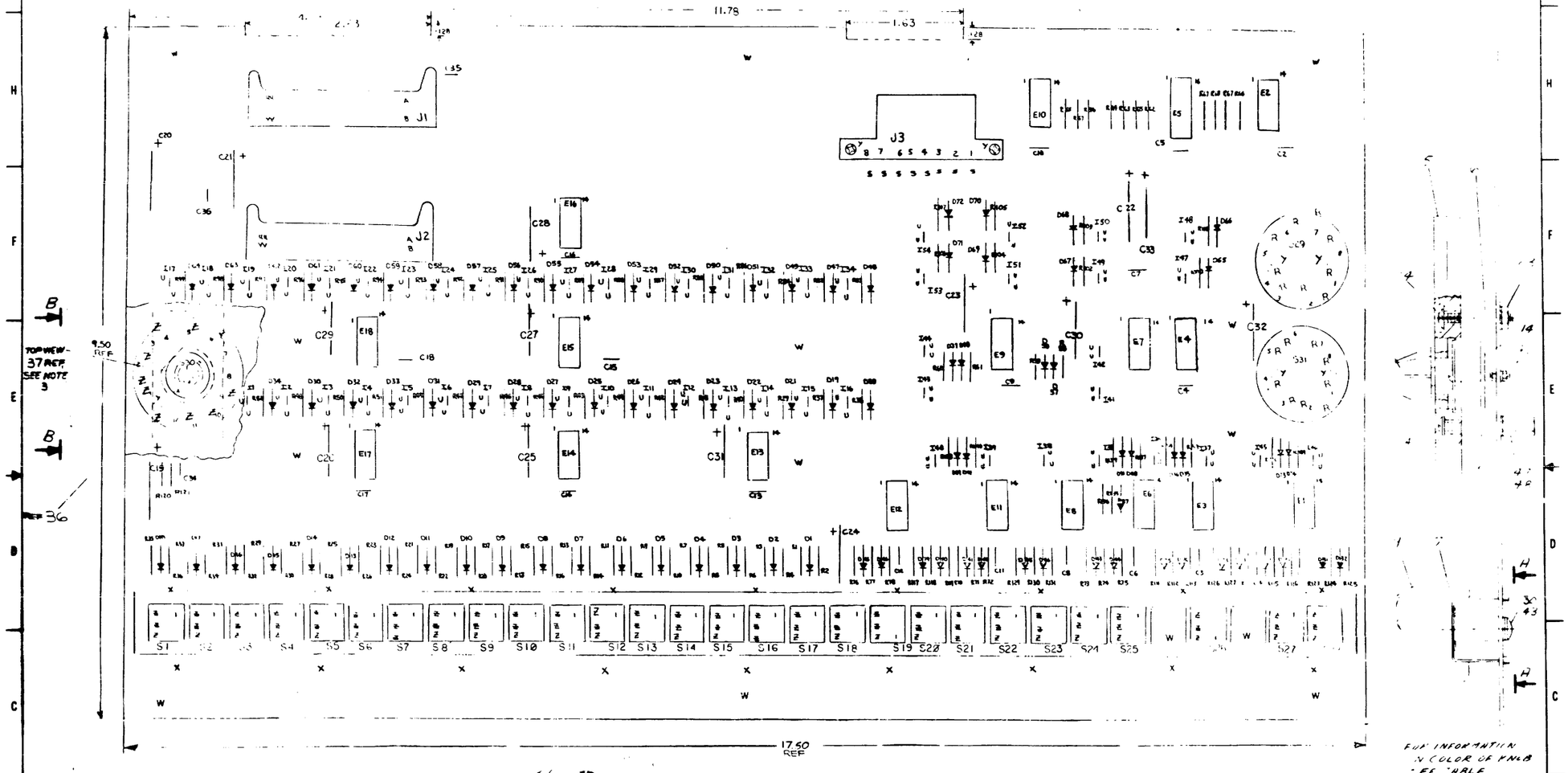

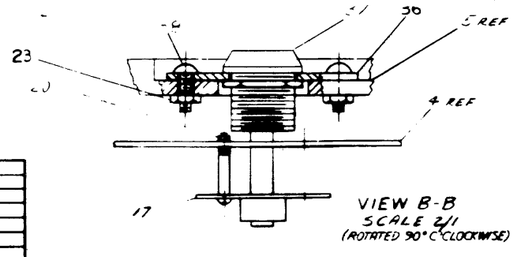

VIEW B-B
SCALE 2/1
(ROTATED 90° C CLOCKWISE)

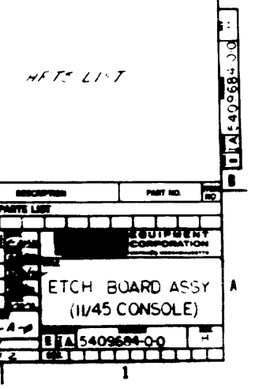

FOR INFORMATION ON COLOR OF KNOB SEE TABLE

SEE NOTE #1

SEE CHIEF'S PARTS LIST

VIEW H-H
SCALE 2/1

QTY	REF DESIGNATION	DESCRIPTION	PART NO.	RD

PARTS LIST

ETCH BOARD REV. E

EQUIPMENT CORPORATION

ETCH BOARD ASSY (11/45 CONSOLE)

SIZE A

5409684-00

REV E

SHEET 1 OF 2

5409684-00

	DRAWN	CHECKED	ENGINEER	MFG APPROVAL	QA
	J. BATTY				
	J. LUSSIER 9/26/69				
	E. SENIOR				
	J. SWANSON				
	J. SWANSON 10/27/69				

SEMICONDUCTOR COMPONENTS CHART

IC TYPE					
IC PACKAGE					
IC MANUFACTURER					
IC PART NO.					

5409684-1	5409684-0					
13	0			KNOB SWITCH AC RED	12107796-04	53
4	0			KNOB SWITCH DC BLUE	12107796-08	52
-	1	R120		RES 68 1/4W 10%	1300221	51
-	1	R121		RES 56 1/4W 10%	1301429	50
						49
8	8			LOCKWASHER INT TOOTH #4	1006633	48
8	8			SPACER .5 HEX #4 X .312 BRASS	1006961	47
4	4			LOCKWASHER #2 INT TOOTH	9006631	46
4	4			NUT HEX #2-56	9006555	45
2	2			SCR PHL HD PAN #4-40 X .188	9006011-1	44
2	2			LOCKWASHER #4 INT TOOTH	1006638	43
REF				ASSY, DRILLING HOLE LOCATION	5409684-PLOT	42
	1			KNOB, SWITCH GRAY	9-12107796-3-0	41
0	18			KNOB, SWITCH MAGENTA	9-12107796-2-0	40
-	1	E8		IC SOC 14DIP	1909686	39
2	2			SCR PHL PAN HD #4-40 X .312 SS	9006022-1	38
-	1			POWER LOCK	1116734	37
-	1			STRAP, LOCK 4PIN	9-116-14009-0-0	36
-	1	E7		I.C. MC 3001	1109516	35
7	7	E7 E18 E19		I.C. DEC 7818	1109928	34
-	1	E5		I.C. DEC 9818	1116436	33
-	2	E2, E9		I.C. DEC 7811	1109929	32
6	6	E1, E3, E4, E11, E12		I.C. DEC 8200	1103578	31
-	4			P.C. 5/8/4 ELF TAPPING HOLE	1116-03-01	30
34	29	R37, R38, R39, R41, R88, R107, R133, R140		RES 1.0K 1/4W 1%	1300677	29
4	36	R1, R34, R55, R57, R4, R17, R18, R31, R44, R117, R123, R131, R135, R136		RES 10K 1/4W 10%	13 11917	28
1	5	C19, C33		CAP .68MF 35V 10% TANT	1105306	27
2	21	C1-C18, C34-C36		CAP .01MF 100V 10%	1001610-1	26
11	11	D1-D11		DIODE D669	1100119	25
6	6			SCR PHL PANHD #6-32 X 5/16 SS	9006068-1	24
3	3			NUT KEPS #6-32	9006560	23
2	2			WASHER FIBER NM #6 MINIATURE	9006673	22
4	4			NUT, NYLON #4-40	9007092	20
18	18			LAMP SOCKET	9003812	19
4	59	I1-I54		LAMP 63090 WOSSW BLUE	12107819	18
-	1	S20		SWITCH ROTARY (4POS)(3SEC)	12107753	17
8	8	S19-S22, S25-S28		SWITCH SPDT MOMENTARY (CCR)	12107841	16
20	20	S1-S18, S23, S24		SWITCH SPDT (CCR)	12107840	15
2	2	S29, S31		SWITCH ROTARY (6POS)(2SEC)	12107775	14
2	2	J1, J2		CONN. RIGHT ANGLE MALE	1200991	13
8	8			PIN SOCKET AND 6/32 DIA	12107805	12
-	1	J3		PIN HOUSING	12093901-36	11
-	4			KNOB, FUNCTION BLK	12107773	10
2	2			KNOB, BUNNY GRAY	9-12-12107825-0-0	9
0	18			KNOB, SWITCH ROSE	9-12-12107796-1-0	8
-	1			SUPPORT, SWITCH	9-116-14009-1-0	7
4	4			STANDOFF, HEX/FEMALE 6-32	9007180-2	6
-	1			SUPPORT, INDICATOR PANEL	9-116-14009-2-0	5
-	1			ETCHED CIRCUIT BOARD	5409683	4
REF	1			MODULE ECO HISTORY	9-116-14009-3-0	3
REF	REF			LINCONT SCHEMATIC	9-12-12107796-4-0	2
REF	REF			X-Y COORDINATE HOLE LOC	9-12-12107796-5-0	1
REF QTY		REF DESIGNATION		DESCRIPTION	PART NO.	ITEM

PARTS LIST

DEC 9218 | B | AD

D664	1N3606				
DEC NO.	EIA NO.	DEC NO.	EIA NO.	DEC NO.	EIA NO.

SEMICONDUCTOR CONVERSION CHART

EQUIPMENT CORPORATION

ETCH BOARD ASSY (11/45 CONSOLE)

SIZE A | 5409684-0-0 | REV H

12

This drawing and specifications, herein, are the property of Digital Equipment Corporation and shall not be reproduced or copied or used in whole or in part as the basis for the manufacture or sale of items without written permission

"SWITCH REGISTER" SWITCHES SHOWN IN LOGICAL "Ø" STATE (DOWN)

NOTES:
1. CONTROL LOGIC AND DISPLAY GROUNDS MUST BE KEPT SEPARATE
2. ALL RESISTORS ARE 2.2K UNLESS MARKED OTHERWISE.
3. ALL UNMARKED DIODES ARE D664

SIGNALS TO PDR MODULE

KNL/PDR INTERFACE 12-9991 J1

SIGNALS FROM PDR MODULE

+5VC

P1 S18 R2 D1 KNLA SWRØØ H
K3 S17 R4 D2 KNLA SWRØ1 H
R5 S16 R6 D3 KNLA SWRØ2 H
R7 S15 R8 D4 KNLA SWRØ3 H
R9 S14 R10 D5 KNLA SWRØ4 H
R11 S13 R12 D6 KNLA SWRØ5 H
R13 S12 R14 D7 KNLA SWRØ6 H
R15 S11 R16 D8 KNLA SWRØ7 H
R17 S10 R18 D9 KNLA SWRØ8 H
R19 SØ9 R20 D10 KNLA SWRØ9 H
R21 SØ8 R22 D11 KNLA SWR10 H
R23 SØ7 R24 D12 KNLA SWR11 H
R25 SØ6 R26 D13 KNLA SWR12 H
R27 SØ5 R28 D14 KNLA SWR13 H
R29 SØ4 R30 D15 KNLA SWR14 H
R31 SØ3 R32 D16 KNLA SWR15 H
R33 SØ2 R34 D17 KNLA SWR16 H
R35 SØ1 R36 D18 KNLA SWR17 H

+C19 6.8 µfd — UNSWITCHED -15V
- C20 6.8 µfd

+5VC

C35 .01 µf

GND
KNLD DISP DATA SELØ H
KNLD DISP DATA SEL1 H
SSRB SAM MODEØ H

PDRH DISP DØØ H — 7416 E13 pin 1 → 2 — 220Ø G64 R37 D19 — I16
PDRH DISP D01 H — 7416 E13 pin 13 → 12 — 220Ø G64 R38 D20 — I15
PDRH DISP DØ2 H — 7416 E13 pin 3 → 4 — 220Ø G64 R39 D21 — I14
PDRH DISP DØ3 H — 7416 E13 pin 5 → 6 — 220Ø G64 RØØ D22 — I13
PDRH DISP DØ4 H — 7416 E19 pin 9 → 8 — 220Ø G64 R01 D23 — I12
PDRH DISP DØ5 H — 7416 E19 pin 11 → 12 — 220Ø G64 R02 D24 — I11
PDRH DISP DØ6 H — 7416 E19 pin 1 → 2 — 220Ø G64 R03 D25 — I10
PDRH DISP DØ7 H — 7416 E19 pin 13 → 12 — 220Ø G64 R04 D26 — IØ9
PDRH DISP DØ8 H — 7416 E19 pin 3 → 4 — 220Ø G64 R05 D27 — IØ8
PDRH DISP DØ9 H — 7416 E19 pin 5 → 6 — 220Ø G64 R06 D28 — IØ7
PDRH DISP DI0 H — 7416 E17 pin 9 → 8 — C25 6.8MFD +15V BUFD — 220Ø G64 R07 D29 — IØ6
PDRH DISP DI1 H — 7416 E17 pin 3 → 4 — +15V C26 6.8MFD — 220Ø G64 R08 D30 — IØ5
PDRH DISP DI2 H — 7416 E17 pin 11 → 10 — 220 G64 R09 D31 — IØ4
PDRH DISP DI3 H — 7416 E17 pin 1 → 2 — 220Ø G64 R50 D32 — IØ3
PDRH DISP DI4 H — 7416 E17 pin 13 → 12 — 220Ø G64 R51 D33 — IØ2
PDRH DISP DI5 H — 7416 E17 pin 5 → 6 — +5VA — 220Ø G64 R52 D34 — IØ1
GNDA
KNLD LAMP TEST (ALL 7416 E7417)

+15V

KNLD LAMP TEST L

FIRST USED ON OPTION/MODEL	QTY	DESCRIPTION	PART NO.	ITEM NO.
11/45		PARTS LIST		

UNLESS OTHERWISE SPECIFIED DIMENSION IN INCHES
TOLERANCES
DECIMALS: XXX ± .005; XX ± .07; X ± .1
ANGLES: 10' 30"
REMOVE BURRS AND BREAK SHARP CORNERS SURFACE QUALITY ✓
MATERIAL
FINISH
NEXT HIGHER ASSY: B-DD-11/45-0

DRN J. Wilson 6/16/11
CHK'D 6/16/72
ENG 6/29/72
PROJ MGR 6/29/72
PROD

digital EQUIPMENT CORPORATION MAYNARD MASSACHUSETTS

TITLE: 11/45 CONSOLE BOARD KNLA

SIZE D | CODE | NUMBER CS 5409684-0-1 | REV H
DIST

SCALE
SHEET 1 OF 4

REVISIONS	REV	ECO #	DATE	APPROVED
	B	5409684-00001	4-14-72	
	C	5409684-00002	5/9/72	J. SWANSON
	D	5409684-00003	7-31-72	J. SWANSON
	E	5409684-00004	8-10-72	B. MINOR
	F	5409684-00005	8-10-72	B. MINOR
	G	5409684-00006	10-6-72	J. SWANSON
	H	5409684-00008	6/16/11	BEATTY

13

This drawing and specifications, herein, are the property of Digital Equipment Corporation and shall not be reproduced or copied or used in whole or in part as the basis for the manufacture or sale of items without written permission.

NOTES:
CONTROL SWITCHES ARE SHOWN IN THEIR "NORMAL" OR NON OPERATING POSITION. SWITCHES WITH ARROWS POINTING UP ARE PUSHED DOWN TO OPERATE THOSE WITH ARROWS DOWN ARE LIFTED TO OPERATE.
CONTROL SWITCHES S25 THRU S28, S19 THRU S22 ARE MOMENTARY SPDT.
ALL 7438 ON SHEETS 1 THRU 8 ARE TO BE CONNECTED TO +5V B AND FUNCTION SW GND RETURN.

12-9991
J2

SIGNALS FROM UBC MODULE

UBCJ DISP ALRS00 H
UBCJ DISP ADRS01 H
UBCJ DISP ADRS02 H
UBCJ DISP ADRS03 H
UBCJ DISP ADRS04 H
UBCJ DISP ADRS05 H
UBCJ DISP ADRS06 H
UBCJ DISP ADRS07 H
UBCJ DISP ADRS08 H
UBCJ DISP ADRS09 H
UBCJ DISP ADRS10 H
UBCJ DISP ADRS11 H
UBCJ DISP ADRS12 H
UBCJ DISP ADRS13 H
UBCJ DISP ADRS14 H
UBCJ DISP ADRS15 H
UBCJ DISP ADRS16 H
UBCJ DISP ADRS17 H

7416 E15, E16, E18
+15V 220 R82 .1 C27,68 UFD GGG D48
220 R84 GGG D58
220 R85 GGG D57
220 R86 GGG D52
220 R87 GGG D53
220 R88 .1 C28 .68 UFD GGG D54
220 R89 .1 C29 .68 UFD GGG D55
220 R90 GGG D56
220 R91 GGG D51
220 R92 GGG D58
220 R93 GGG D59
220 R94 GGG D60
220 R95 GGG D61
220 R96 GGG D62
220 R97 GGG D63
220 R98 GGG D64
220 R99
+5V A
+15V
I34 I33 I32 I31 I30 I29 I28 I27 I26 I25 I24 I23 I22 I21 I20 I19 I18 I17
OL-2C
ECO#,12-09219

GND A (ALL 7416 & 7417)

KNLB LAMP TEST L

+5V B

R70 R71 R72 R73 R74 R75 R76 R77 R78
S22 S23 S24 S25
D41 D42 D43 D44 D45 D46
7438 E11, E8&C, E12

KNLB CONT SW H
KNLB SINGLE CYCLE SW H
KNLB LOAD ADRS SW H

KNLC SWITCHED (−V)
FUNCTION SW GND RETURN

KNLD DISP ADRS SEL0 H
KNLD DISP ADRS SEL1 H
KNLC PNL LOCK H
SSAB SAPA MODE1 .4
KNLC START SW H
SAPA IND DATA H
KNLC REG EXAM SW H
KNLC EXAM SW H
+5V B
KNLC REG DEP SW H
KNLD DISP ADRS SEL2 H
KNLC DEP SW H
FUNCTION SW GND RETURN
KNLC HALT SW H

C36 .01 µF

UBCJ IND PAUSE H
UBCJ IND ADRS ERR H
UBCJ IND MASTER H
UBCJ IND RUN H

REVISIONS		
REV	CHANGE NO	DATE

FIRST USED ON OPTION/MODEL	QTY	DESCRIPTION	PART NO	ITEM NO
11/45		PARTS LIST		

UNLESS OTHERWISE SPECIFIED DIMENSION IN INCHES TOLERANCES
DECIMALS: XXX ± .005, XX ± .02, X ± .1 — ANGLES: 10'30
REMOVE BURRS AND BREAK SHARP CORNERS SURFACE QUALITY ✓
MATERIAL
FINISH

		DATE
DRN		11-30-71
CHK'D		12/4/71
ENG		12-9-71
PROJ ENG		3/10/72
PROD		DATE

NEXT HIGHER ASSY: B-00-11/45-0

digital EQUIPMENT CORPORATION

TITLE: 11/45 CONSOLE BOARD KNLB

SIZE	CODE	NUMBER	REV.
D	CS	5409684-0-1	H

SCALE NONE
SHEET 2 OF 4
DIST

DRAWING NO 5409684-0-1
DEC 1-0000-00
CROSS REF-0

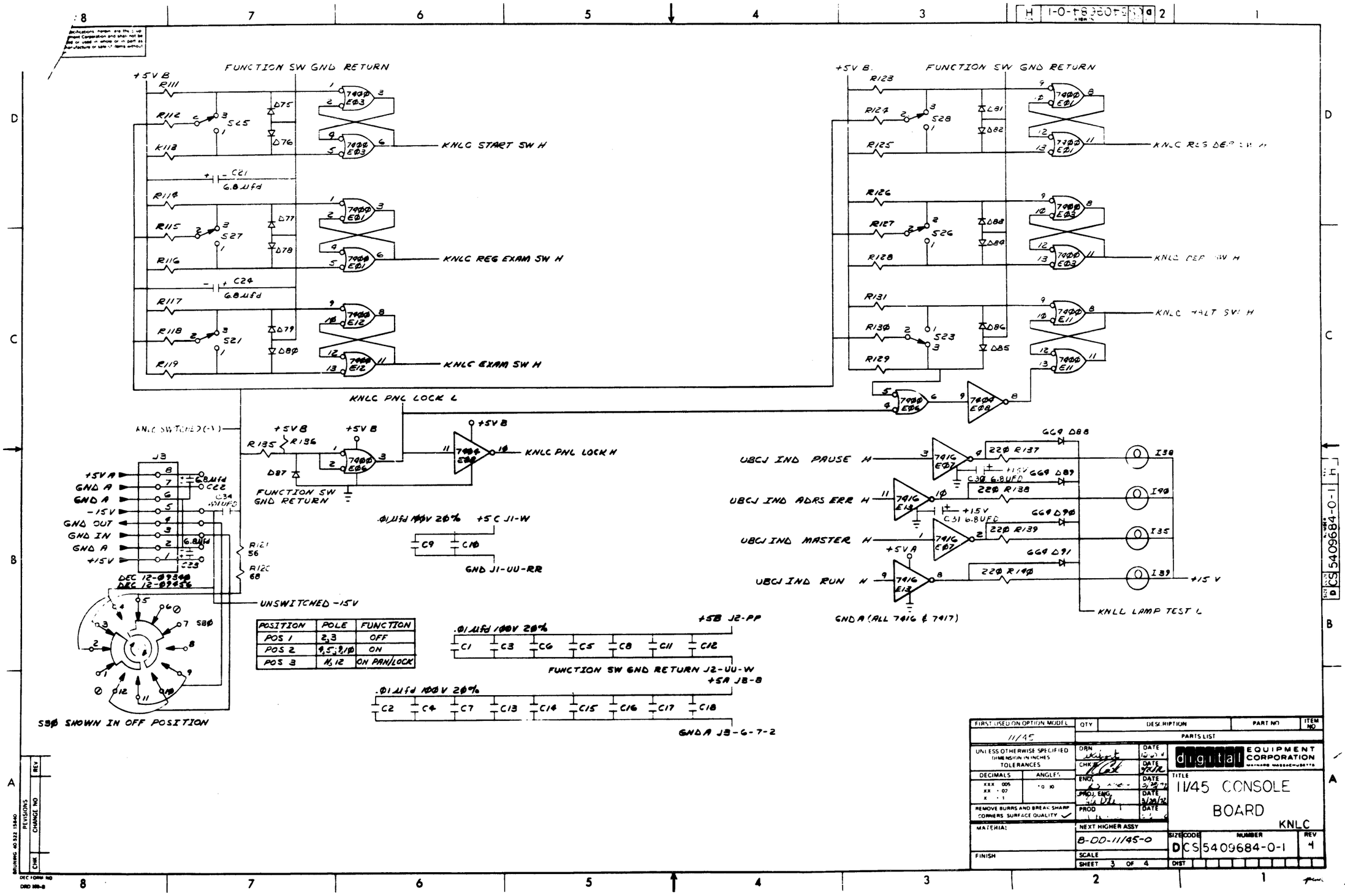

POSITION	POLE	FUNCTION
POS 1	2,3	OFF
POS 2	4,5;9,10	ON
POS 3	11,12	ON PAN/LOCK

FIRST USED ON OPTION MODEL: 11/45

PARTS LIST

UNLESS OTHERWISE SPECIFIED DIMENSION IN INCHES TOLERANCES

DECIMALS: XXX .005, XX .02, X .1 — ANGLES: ±0 30

REMOVE BURRS AND BREAK SHARP CORNERS SURFACE QUALITY ✓

MATERIAL

FINISH

DRN — DATE

CHK — DATE

ENG — DATE

PROJ. ENG. — DATE 3/28/72

PROD — DATE

NEXT HIGHER ASSY: B-DD-11/45-0

SCALE

SHEET 3 OF 4

digital EQUIPMENT CORPORATION MAYNARD MASSACHUSETTS

TITLE: 11/45 CONSOLE BOARD KNLC

SIZE D — CODE CS — NUMBER 5409684-0-1 — REV 4

DIST

REVISIONS: CHANGE NO — REV — CHK

DRUNING 40 522 15840

DEC FORM NO DRD 100-B

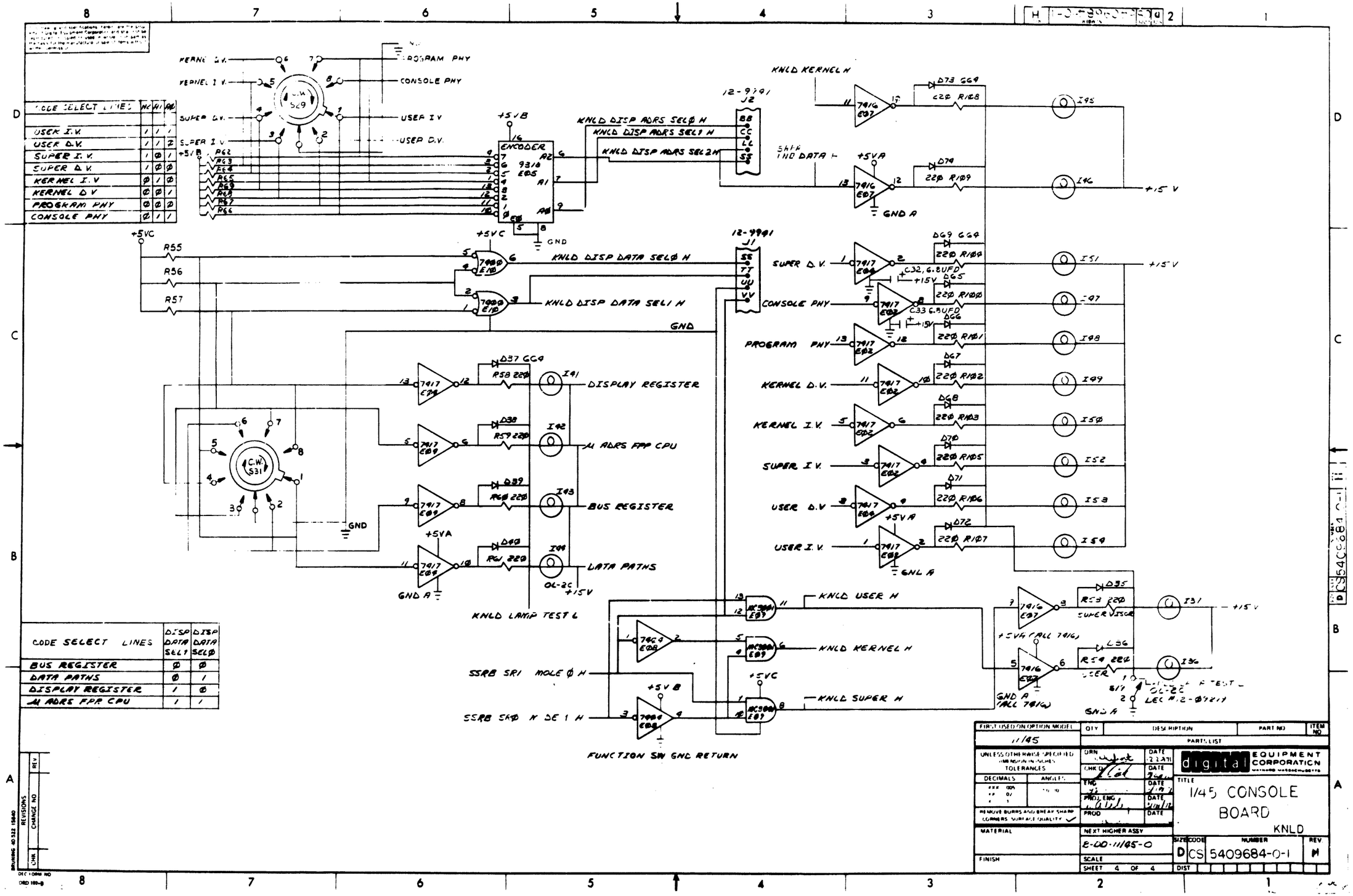

CODE SELECT LINES	NC	A1	A0
USER I.V.	1	1	1
USER D.V.	1	1	0
SUPER I.V.	1	0	1
SUPER D.V.	1	0	0
KERNEL I.V.	0	1	0
KERNEL D.V.	0	0	1
PROGRAM PHY	0	0	0
CONSOLE PHY	0	1	1

CODE SELECT LINES	DISP DATA SEL1	DISP DATA SEL0
BUS REGISTER	0	0
DATA PATHS	0	1
DISPLAY REGISTER	1	0
μ ADRS FPP CPU	1	1

FIRST USED ON OPTION MODEL: 11/45

PARTS LIST

UNLESS OTHERWISE SPECIFIED DIMENSION IN INCHES TOLERANCES

DECIMALS | ANGLES

REMOVE BURRS AND BREAK SHARP CORNERS SURFACE QUALITY

MATERIAL

FINISH

DRN | DATE 12 2 71

CHK'D | DATE

ENG | DATE

PROJ. ENG | DATE

PROD | DATE

NEXT HIGHER ASSY: E-00-11/45-0

SCALE

SHEET 4 OF 4

digital EQUIPMENT CORPORATION MAYNARD MASSACHUSETTS

TITLE: 1/45 CONSOLE BOARD KNLD

SIZE D | CODE CS | NUMBER 5409684-0-1 | REV H

DIST

REVISIONS: CHK | CHANGE NO | REV

BRUNING 40 522 15840

DEC FORM NO DRD 100-B

16

digital EQUIPMENT CORPORATION MAYNARD MASSACHUSETTS

DRAWING DIRECTORY

"THIS DRAWING AND SPECIFICATIONS, HEREIN, ARE THE PROPERTY OF DIGITAL EQUIPMENT CORPORATION AND SHALL NOT BE REPRODUCED OR COPIED OR USED IN WHOLE OR IN PART AS THE BASIS FOR THE MANUFACTURE OR SALE OF ITEMS WITHOUT WRITTEN PERMISSION. COPYRIGHT © 1975 , DIGITAL EQUIPMENT CORPORATION"

CUSTOMER PRINT SET INDEX

THIS IS PRINT SET

SEQUENCE		SEQUENCE
DRAWING DIRECTORY	B-DD-KB11-D (SHEETS 1 & 2 ONLY)	
MODULE UTILIZATION	E-MU-KB11-D-1	
BUS CABLES & GRANT CHAIN	D-IC-KB11-A-BG	
BLOCK DIAGRAM	D-BD-KB11-D-2	
KB11-C FLOW DIAGRAMS	D-FD-KB11-C-1	
DATA PATHS (DAP)	E-CS-M81ØØ-Ø-1	
GEN REG & ALU CONTROL (GRA)	E-CS-M81Ø1-Ø-1	
IR DECODE & COND. CODES (IRC)	E-CS-M8132-Ø-1	
ROM & ADDR CONTROL (RAC)	E-CS-M8123-Ø-1	
PROC DATA & UNIBUS REG (PDR)	D-CS-M81Ø4-Ø-1	
TRAP & MISC CONTROL (TMC)	E-CS-M81Ø5-Ø-1	
UNIBUS & CONSL. CONTROL (UBC)	E-CS-M8119-Ø-1	
TIMING GENERATOR	E-CS-M81Ø9-Ø-1	
SYSTEM JUMPER BOARD	D-CS-M8116-Ø-1	
CIRCUIT SCHEMATIC	C-CS-M93Ø-Ø-1	
CIRCUIT SCHEMATIC	C-CS-M92Ø-Ø-1	
CIRCUIT SCHEMATIC	E-CS-5409910-0-1	
CIRCUIT SCHEMATIC	E-CS-5409912-0-1	

UNIT VARIATIONS

VAR	TITLE	PRINT SET 1
KB11-D	16 BIT PROCESSOR	X

REVISIONS		
REV	A	
CHG. NO.	11/55-1	
DATE	7-76	

USED ON OPTION/MODEL	
11/45	
11/55	

SHEET 1 OF 5

		DATE
DRN.	HEALY	12/30/7
CHK'D.	D. HEALY	12/30/7
PROJ ENG.	Verill Bran	+Jan '76
PROD.	J. Borenstein	7FEB76
FIELD SERV.	C Lynch	5FEB76

TITLE 16 BIT PROCESSOR

SIZE	CODE	NUMBER	REV
B	DD	KB11-D	A

DIST

EN-01062-1A-16-R972-(325)

DRB 106

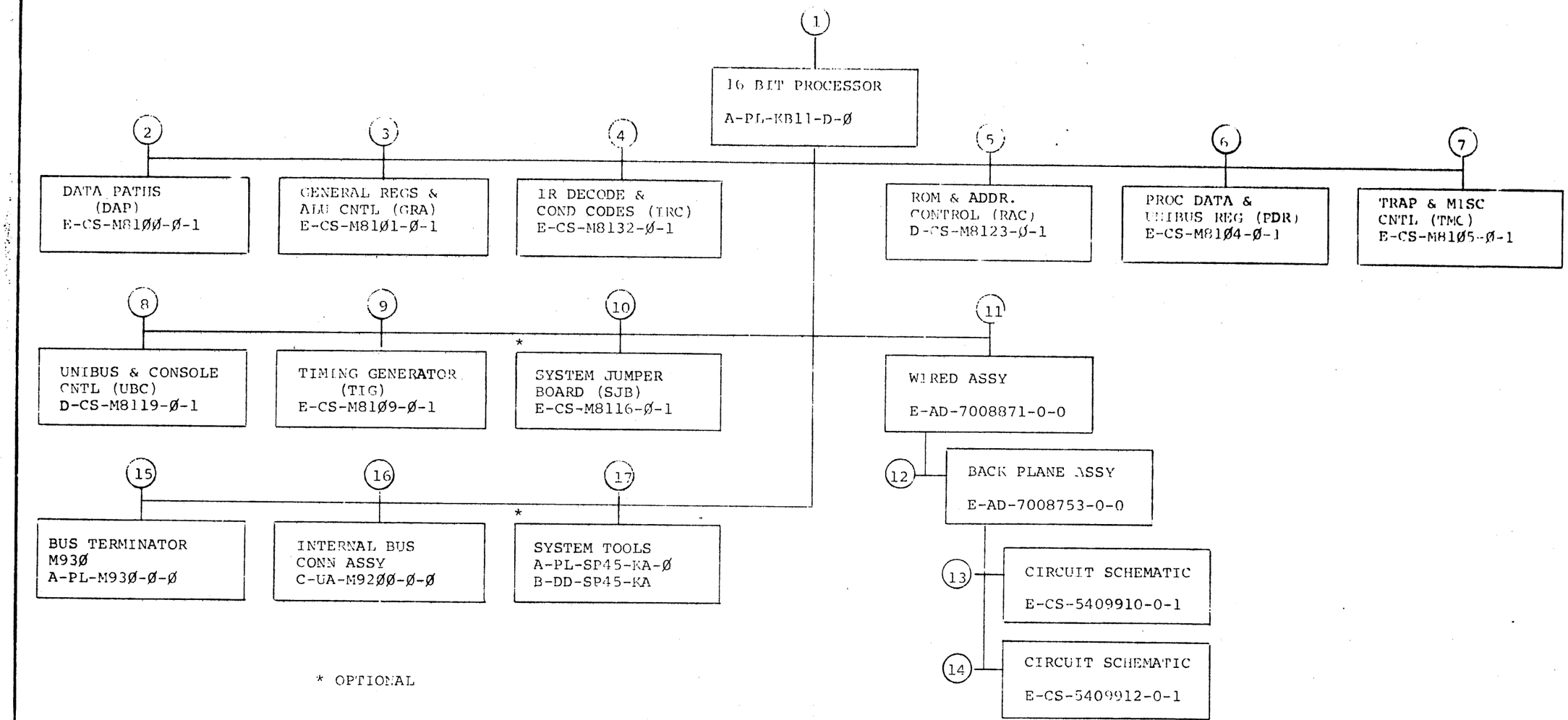

* OPTIONAL

TITLE		SIZE	CODE	NUMBER	REV
16 BIT PROCESSOR	SHEET 2 OF 5	B		KB11-D	A

THESE DRAWINGS AND SPECIFICATIONS, AS AN UNPUBLISHED WORK, ARE THE PROPERTY OF DIGITAL EQUIPMENT CORPORATION, MAYNARD, MASS. THEY ARE NOT TO BE USED IN ANY WAY DETRIMENTAL TO THE INTERESTS OF DIGITAL EQUIPMENT CORPORATION.

1	2	3	4	5	6	7	8	9	10	11	12	13	14	15	16	17	18	19	20	21	22	23	24	25	26	27	28
M930	M8126	M8127	M8128	M8129	M8130	M821	M8132	M8133	M8134	M8135	M8110	M8108	M8107		M8120					M8120							M930
TERMINATOR NOTE 5,6	FPH	FRL	FRM	FXP	DAP	DRA	IRC	RAC	PDR	TMC	UBC		M8110 SUB	RESERVED FOR SPECIAL APPL & TESTS	MEM CNTRL #1	M8121-YA				MEM CNTRL #2	M8121-YA						
UNIBUS A												NOTE 4	NOTE 4												UNIBUS A	UNIBUS B	UNIBUS B
M9301														M8109 TIG											M7800 DLI-A OR M7856 DLII-W	M873-YB BOOTSTRAP LOADER	
SPACE RESERVED FOR KWII-L	SPACE RESERVED FOR FPII-C OPTION (SLOTS 2 THRU 5)														SPACE RESERVED FOR SEMICONDUCTOR MEMORY OPTION (SLOTS 16 THRU 25)												
SPACE RESERVED																											
SPACE RESERVED FOR CP/FP MAINT CARD																									SPACE RESERVED FOR SMALL PERIPHERAL CONTROLLERS		

M9200

M930 OR M9202 TO S.U.

NOTES:

1. POWER TO BIPOLAR MEMORY REMAINS ON WITH THE CONSOLE ON/OFF SWITCH IN THE OFF POSITION.
2. CAUTION MUST BE OBSERVED WHEN INSTALLING THE BOARDS INTO THE BACK PANEL SLOTS BECAUSE OF NON-STANDARD VOLTAGES PRESENT IN SLOTS #1,#2 AND 15 THRU 28.
3. THE KBII BACK PLANE IS WIRED WITH TWO UNIBUSES:
   - UNIBUS A - CONNECTS TO THE CPU, KWII-L AND SPC SLOTS
   - UNIBUS B - CONNECTS TO THE TWO SEMICONDUCTOR MEMORY CONTROL SLOTS.

   USUALLY UNIBUS A AND UNIBUS B ARE JUMPERED TOGETHER TO FORM ONE CONTINUING UNIBUS.

   3.1 IF ONLY ONE UNIBUS IS USED:
   - A. THE UNIBUS PLUGS IN SLOT # 28
   - B. PLUG AN INTERNAL BUS CONNECTOR JUMPER (M9200) INTO SLOTS # 26 AND #27.
   - C. PLUG A BUS TERMINATOR (M930) INTO SLOT #1.

   3.2 IF TWO UNIBUSES ARE USED:
   - A) UNIBUS A PLUGS IN SLOT #26.
   - B) TERMINATOR (M930) FOR UNIBUS A PLUGS INTO SLOT #1.
   - C) UNIBUS B PLUGS IN SLOT # 27
   - D) TERMINATOR (M930) FOR UNIBUS B PLUGS INTO SLOT # 28.
4. IF KTII-CD OPTION IS PRESENT M8108-YA GOES IN SLOT #13 AND M8107 GOES IN SLOT #14, IF NO KTII M8116 GOES IN SLOT #14 AND SLOT #13 IS EMPTY.
5. NEVER INSTALL A M9202 TERMINATOR IN SLOT AB1, AS UNIBUS WILL NOT OPERATE PROPERLY.
6. OPTIONAL EMPLACEMENT ON BUS TERMINATOR BOOTSTRAP

DESIGNATES OPTION

2	CONSOLE TERMINAL CONTROL	A-PL-DLII-W
1	BOOTSTRAP LOADER	A-PL-M9301-B
1	BOOTSTRAP LOADER	D-CS-M873-YA
1	BUS CONN ASSY	D-UA-M9202-0-0
2	SYSTEM MAINT TOOLS	A-PL-SPAS-KA-0
2	FLOATING POINT PROC	A-PL-FPII-C-0
2	CONSOLE TERMINAL CONTROL	A-PL-DLII-A-0
1	INTERVAL CLOCK	A-PL-KWII-0-0
1	BIPOLAR MEMORY	A-PL-MSII-A-0
2	BIPOLAR MEMORY CONTROL	A-PL-MSII-CC-0
2	MEM. MANAGEMENT UNIT	A-PL-KTII-CD-0
1	INT. BUS CONN ASSY	C-UA-M9200-0-0
2	BUS TERMINATOR	A-PL-M930-0-0
2	SYSTEM JUMPER BD	D-CS-M8116-0-1
1	TIMING GENERATOR	D-CS-M8109-0-1
1	UNIBUS & CONSOLE CNTL	D-CS-M8119-0-1
1	TRAP & MISC CONTROL	E-CS-M8105-0-1
1	PROC. DATA & UNIBUS REG	E-CS-M8104-0-1
1	ROM & ADDR. CONTROL	E-CS-M8123-0-1
1	IR DECOD & COND CODES	E-CS-M8132-0-1
1	GENERAL REGS & ALU CNTL	E-CS-M8101-0-1
1	DATA PATHS	E-CS-M8100-0-1
	DESCRIPTION	D-NO./PART NO. / ITEM NO.

DRAWING NO.	11/55-00001	REV.	A
DRN	M. ROKEN		
CHK			

UNLESS OTHERWISE SPECIFIED DIMENSIONS ARE IN INCHES

ANGLES ± 30' | CLASS OF FIT/TOLERANCE | NOMINAL DIMENSION/CLEARANCE INCHES

SURFACE QUALITY ± | CHECK ONE | MILLIONTHS | DECIMALS | PREFERRED

QUANTITY & VARIATION

THIRD ANGLE PROJECTION

REMOVE BURRS AND BREAK SHARP CORNERS

DO NOT SCALE DWG

MATERIAL

FINISH

DRN. & Date Last Chg. 18-JUL-74

CHK. D.D. 30 JAN 74

ENG. 4 FEB 74

PROJ. ENG. 4 FEB 74

PROD. 4 FEB 74

NEXT HIGHER ASSY. B-DD-KBII-D

SCALE

SHEET 1 OF 1

FIRST USED ON 11/55 - 11/45

TITLE MODULE UTILIZATION

SIZE E | CODE MU | NUMBER KBII-F-1 | REV. A

DIST.

This drawing and specifications, herein, are the property of Digital Equipment Corporation and shall not be reproduced or copied or used in whole or in part as the basis for the manufacture or sale of items without written permission.

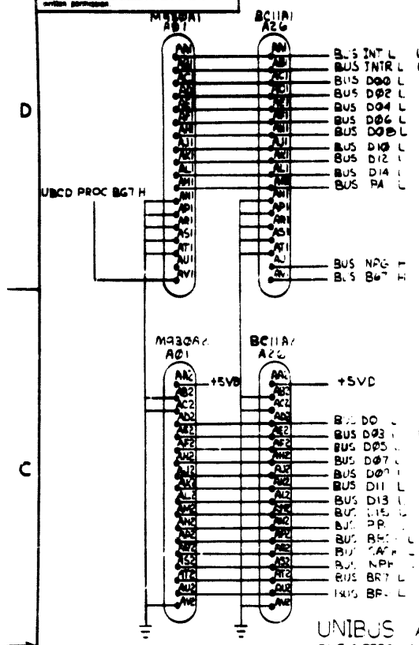

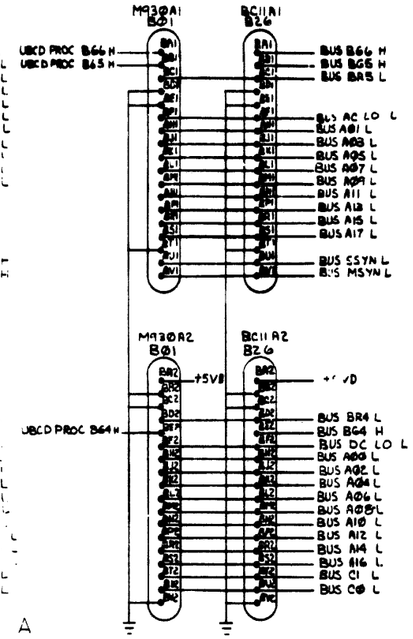

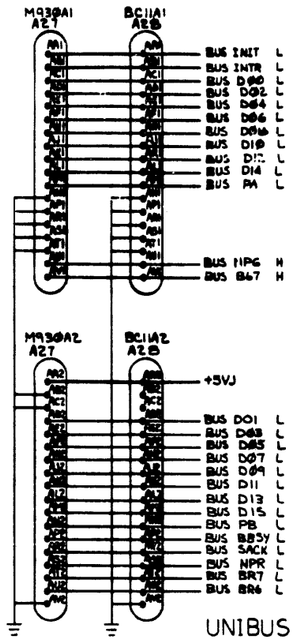

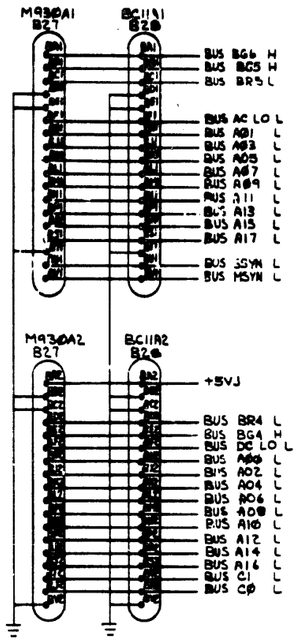

NOTES:

1. UNIBUS A IS A CONVENTIONAL UNIBUS WITH PRIORITY ARBITRATION CONTAINED WITHIN THE KB11-A
2. UNIBUS B IS TRANSPARENT TO THE KB11-A IN THAT NO PRIORITY ARBITRATION IS PRESENT, SEMICONDUCTOR MEMORY (UNIBUS PORT) IS TIED TO BUS B.
3. TO CONNECT SEMICONDUCTOR MEMORY TO UNIBUS A IN SINGLE BUS CONFIGURATION BUSA (AB26) IS CONNECTED TO BUS B (AB27) VIA M9200 AND BUS B OUT(AB28) BECOMES UNIBUS OUT.
4. BUS A SIGNAL PREFIXES IN KB11-A REFER TO UNIBUS A IN MULTIBUS CONFIGURATIONS.
5. BUS B SIGNAL PREFIXES IN M511 REFER TO UNIBUS B IN MULTIBUS CONFIGURATIONS.
6. C0IR2 - C0IV2 MUST BE DELETED ON BACKPANEL WHEN KW11 IS INSTALLED.
7. WHEN NO DEVICE IS INSERTED G727 MUST BE BE PLACED IN THE D SLOT TO JUMPER GRANT LINES TO UNIBUS OUT.

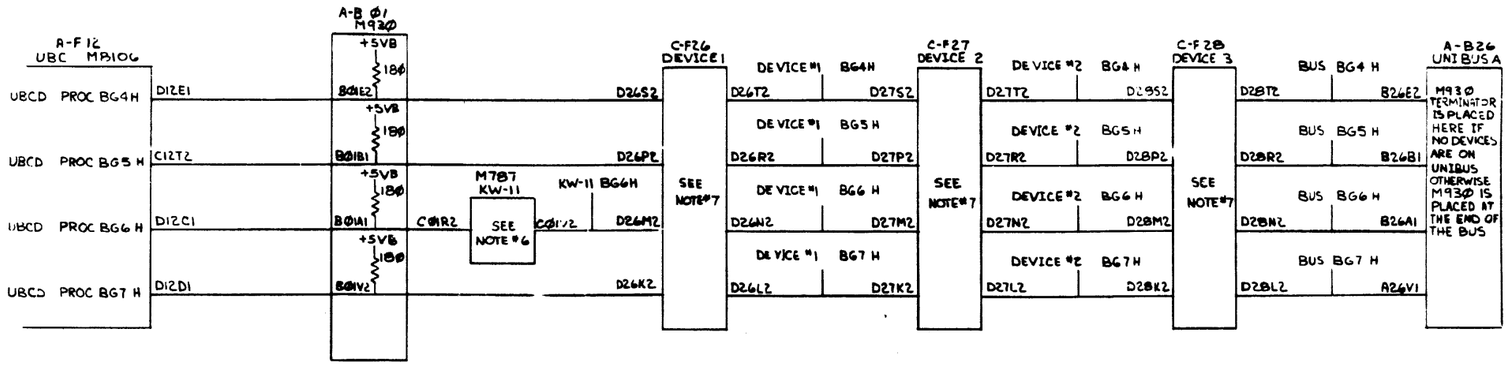

FIRST USED ON OPTION/MODEL	QTY.	DESCRIPTION	PART NO.	ITEM NO.
11/45		PARTS LIST		

UNLESS OTHERWISE SPECIFIED DIMENSION IN INCHES. TOLERANCES
DECIMALS: XX = .02, X = .1; ANGLES: ±0° 30'
REMOVE BURRS AND BREAK SHARP CORNERS. SURFACE QUALITY ✓
MATERIAL
FINISH

DRN [signature] DATE 3/72
CHK'D [signature] DATE 4/72
ENG [signature] DATE
PROJ. ENG. [signature] DATE
PROG [signature] DATE 4-21-72

digital EQUIPMENT CORPORATION

TITLE: BUS CABLES AND GRANT CHAIN (BUS)

NEXT HIGHER ASSY: B-DD-KB11-A
SIZE CODE: D IC
NUMBER: KB11-A-BG
REV.
SCALE
SHEET 1 OF 1
DIST.

REV	REVISIONS	CHANGE NO	CHK

BRUNING 46-522 1840
DEC 1 0PM 00
CAD 102-P

This drawing and specifications, herein, are the property of Digital Equipment Corporation and shall not be reproduced or copied or used in whole or in part as the basis for the manufacture or sale of items without written permission. COPYRIGHT © 1971

DIGITAL EQUIPCORP

ALU
PCA (DAPF,H)
PCB (DAPF,H)
PCA(T2)[51]
0 NO CLOCK
1 LOAD
PCB(T2)[50-49]
0 NO CLOCK 2 SF7: LOAD
1 LOAD 3 DF7: LOAD
SHF (T2) [48-47]
0 SWAP BYTES
1 PCB
2 NO SHIFT
3 RIGHT SHIFT
SHFR (DAPF,H,J)
ALU(T1) [17-15]
0 NOT A
1 B
2 A
3 A PLUS B
4 NOT USED
5 A PLUS A
6 A MINUS B
7 INSTRUCTION DEPENDENT
ALU (DAPF, DAPH)
B
A
AMX(T1) [23-22]
0 DR
1 PCB
2 SR
3 BR
BMX (T1) [21-20]
0 KOMX
1 K1MX
2 SR
3 BR
BMX (DAPB,C,D)
AMX (DAPB,C,D)
GS (16 REGISTERS) (GRAD,E,F,H)
GD (16 REGISTERS) (GRAD,E,F,H)
PAD (T14) [43-41]
PWE (T14) [45-44]
0 SF GS 4 SFV1 GS 0 DON'T WRITE
1 SF GD 5 DF GD 1 CONDITIONAL
2 5 5 6 0 0 2 WRITE
3 NOT USED 7 6 6 3 NOT USED
SRX (T2) [61-60]
0 SHFR
1 GS
2 SF7:SHFR, -SF7:GS
3 NOT USED
SRK (T2) [57]
0 NO CLOCK
1 LOAD
SRMX (GRAD,E,F,H)
DRMX (GRAD,E,F,H)
SR (GRAD,F,H)
DR (GRAD,E,F,H)
DRX (T2) [59-58]
0 SHFR
1 GD
2 DF7:SHFR; -DF7:GD
3 CLR DR
DRK (T2) [56-55]
0 NO CLOCK
1 SHIFT RIGHT
2 SHIFT LEFT
3 LOAD
SC (GRAJ)
SHC (T1) [34-33]
0 NO COUNT
1 COUNT
2 LOAD DR<5:0>
3 LOAD 17₈
BAX(T1) [38-37]
0 DR
1 PCB
2 SR
3 FP EALU (MAINT)
BAMX (DAPB, C,D)
VIRTUAL ADDRESS
FROM FPP AMXMX
KOMX (DAPD)
K1MX (DAPE)
KMX (T1) [19-18]
KOMX
0 1
1 2
2 SOURCE CONST.
3 DEST. CONST.
K1MX
START VECTOR
TRAP VECTOR
SOB & MARK OFFSET
BXX OFFSET
SRCCON
DSTCON
TV
SV
DATA FROM SEMI-COND MEMORY
TO/FROM UNIBUS
INT BUS
UNIBUS
BUS BUFFER REGISTER (PDR,I)
(T3)
BRMX (PDRA)
BRX (T2) [62]
0 SHFR
1 BUS(UNIBUS, FAST BUS, OR INTERNAL BUS)
SHFR
FROM FPP UADR/ CPU UADR
MULTIPLEXER DISPLAY (PDRF)
TO CONSOLE DATA LIGHTS
LR
BR
BRK (T2) [63]
0 NO CLOCK
1 LOAD
IRK(T2)[46]
0 NOCLOCK
1 LOAD
BR (DAPA)
BRA (PDRB)
IR (IRCA)
AFIR (RACJ)
LR (PDRB)
PS (IRCH,PDRD)
PIRQ (PDRD)
SL (PDRC)
PB (PDRC)
SL/PB
DATA TO SEMI-COND MEMORY
IBS (T1) [36-35]
0 NO COMMAND
1 READ SW
2 LOAD PS
3 READ PS
FROM SWITCH REGISTER (PDRH)
PIRQ
PS
DMX (PDRE)
INTERNAL BUS
DATA FROM FPP DOMX
DATA TO KT11-CD REGISTERS AND FPP FDR
DATA FROM KT11-CD REGISTERS

SYMBOL DEFINITION
FUNCTION NAME
DATA BUS OUT
XXXX
(YYYY)
DATA BUS IN
CIRCUIT SCHEMATIC LOCATION
ROM BUFFER SIGNAL NAME
TIME PULSE / STATE
ROM OUTPUT NUMBER
ZZZ (TI) [NN]
CONTROLLING SIGNAL

11-1019

FIRST USED ON OPTION/MODEL	QTY	DESCRIPTION	PART NO	ITEM NO
11/45		PARTS LIST		

UNLESS OTHERWISE SPECIFIED DIMENSION IN INCHES TOLERANCES
DECIMALS: XXX ± .005, XX ± .02, X ± 1
ANGLES: ±0° 30'
REMOVE BURRS AND BREAK SHARP CORNERS SURFACE QUALITY ✓
MATERIAL —
FINISH —

DRN — DATE 12 6 71
CHK — DATE 12/6/71
ENG — DATE 4 FEB 72
PROD — DATE 4 FEB 72
NEXT HIGHER ASSY B-DD-KB11-D
SCALE —
SHEET 1 OF 2

EQUIPMENT CORPORATION MAYNARD MASSACHUSETTS

TITLE
BLOCK DIAGRAM
KB11-D

SIZE D CODE BD NUMBER KB11-D-2 REV A
DIST

REVISIONS	REV
CHANGE NO 11/55-01001	A
CHK	

DRAWING 40.522 10MD
DEC FORM NO DRD 102-B

220

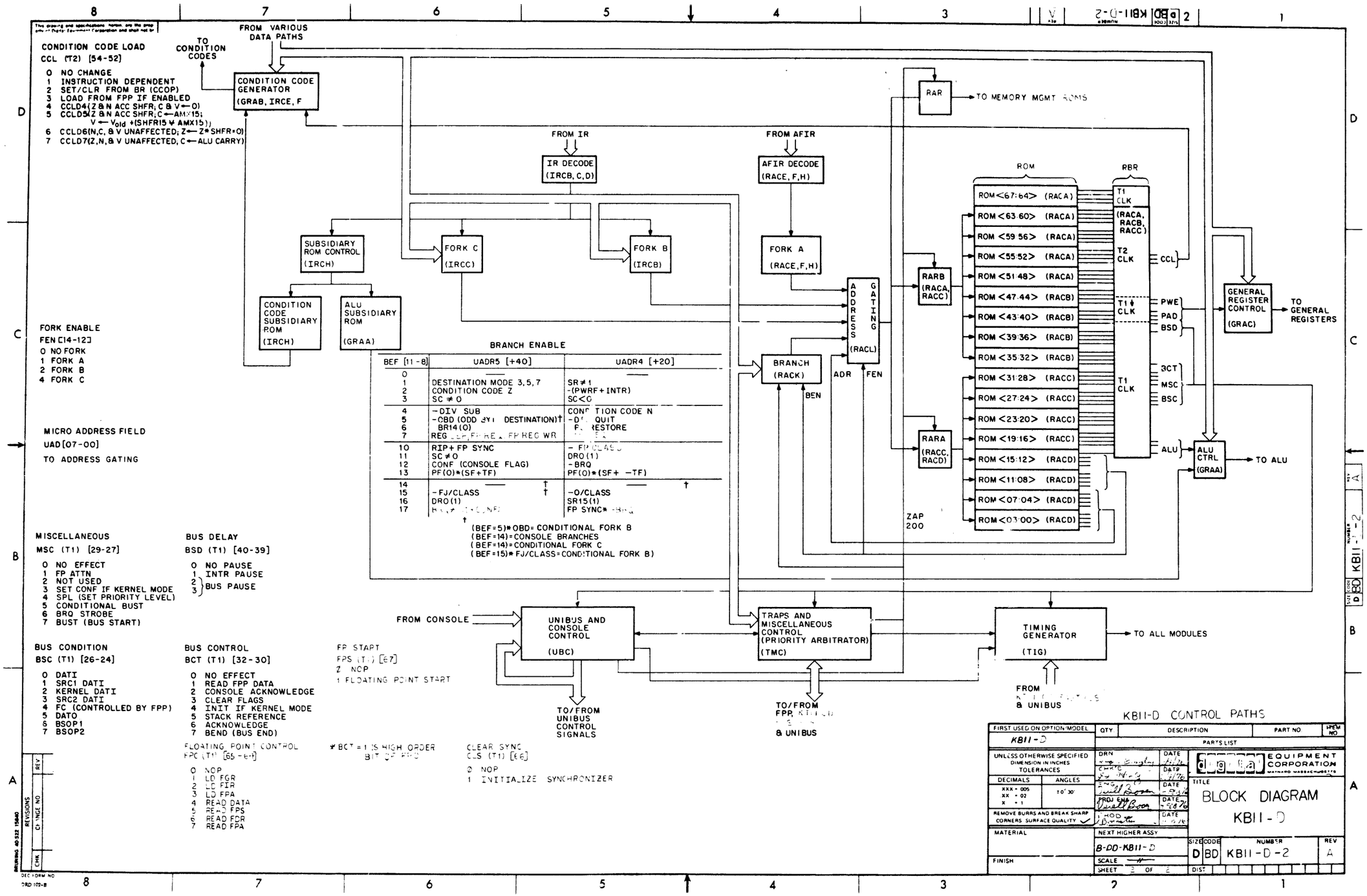

KB11-D CONTROL PATHS

FIRST USED ON OPTION/MODEL: KB11-D	QTY	DESCRIPTION	PART NO / ITEM NO
PART'S LIST			

UNLESS OTHERWISE SPECIFIED DIMENSION IN INCHES TOLERANCES
DECIMALS: XXX = .005, XX = .02, X = 1 — ANGLES: ±0° 30'
REMOVE BURRS AND BREAK SHARP CORNERS SURFACE QUALITY ✓
MATERIAL
FINISH

DRN — DATE 11/2/76
CHKD — DATE 11/7/76
ENG — DATE 11/8/76
PROJ ENG — DATE 11/8/76
MOD — DATE 11/15/76

EQUIPMENT CORPORATION, MAYNARD, MASSACHUSETTS

TITLE: BLOCK DIAGRAM KB11-D

NEXT HIGHER ASSY: B-DD-KB11-D
SIZE D | CODE BD | NUMBER KB11-D-2 | REV A
SCALE
SHEET 2 OF 2 | DIST

REVISIONS — REV | CHANGE NO | CHK

DRAWING 40-322 15460
DEC FORM NO DRD 102-B

KB11-D-2 REV A SIZE D BD NUMBER KB11-D-2

This drawing and specifications, herein, are the property of Digital Equipment Corporation and shall not be reproduced or copied or used in whole or in part as the basis for the manufacture or sale of items without written permission. COPYRIGHT © 1976

DIGITAL EQUIP. CORP.

PCA CLOCK [51]; PCA:
Ø-NO CLOCK
1-LOAD

PCA

PCB

PCB CLOCK [49-50]; PCB:
Ø-NO CLOCK
1-LOAD
2-SF7 LOAD
3-DF7 LOAD

SHIFTER [97-98]; SHF:
Ø-SWAP (SWAP BYTES)
1-PCB
2-NO SHIFT
3-RIGHT SHIFT

SHFR

PAD WRITE ENABLE [94-95]; PWE:
Ø-DON'T WRITE
1-CONDITIONAL (SIGNALS SIGN EXTEND ON MOVE)
2-WRITE (UNCONDITIONAL)
3-NOT USED

BUS CONTROL [30-32]; BCT:
Ø-NO AFFECT
1-READ FP
2-CONS. ACKN
3-CLR. FLAGS
4-INIT IF KERNEL MODE
5-STACK REF
6-ACKN
7-BEND (BUS END)

CONDITION CODE LOAD [52-54]; CCL:
Ø-NO CHANGE
1-INSTRUCTION DEP (SUBSIDIARY ROM)
2-SET/CLR CC'S FROM BR (CCOP*S)
3-LOAD CC'S FROM FPU IF FP ENB
4-CCLD ([Z] IF ACC SHFR; [C] IF V←Ø)
5-CCLD ([Z] IF ACC SHFR; [C] ← AMX15; V← VALID ←SHFR[15]←AMX15)
6-CCLD ([N,C,V] UNAFFECTED; [Z] ← Z*SHFR=Ø)
7-CCLD ([Z,N,C,V] UNAFFECTED; [C] ← ALU CARRY)

ARITHMETIC LOGIC UNIT [15-17]; ALU:
Ø-A
1-B
2-A
3-A PLUS B
4-NOT USED
5-A PLUS A (LEFT SHIFT)
6-A MINUS B
7-INSTRUCTION DEPENDENT ($)

SCRATCHPAD ADDRESS (GS; GD) [91-93]; PAD:
Ø-SF; SF
1-SF; DF
2-S; S
3-NOT USED
4-SFVI; SFVI
5-DF; DF
6-Ø; Ø
7-G; G

ALU

(A) (B)

AMX

BMX

A MULTIPLEXOR [22-23]; AMX:
Ø-DR
1-PCB
2-SR
3-BR

B MULTIPLEXOR [20-21]; BMX:
Ø-KØMX
1-KIMX
2-SR
3-BR

KØMX

KIMX

1
2

SRCCON
DSTCON

CONSTANTS

CONSTANTS MULTIPLEXORS [KØMX, KIMX] [18, 19]; KMX:
Ø-1; SV
1-2; TV
2-SRCCON; SOB&MARK OFFSET
3-DSTCON; BXX OFFSET

-SV
-TV

GR

GS

GD

16 X 16 REGISTER FILES

SR MULTIPLEXOR [60-61]; SRX:
Ø-SHFR
1-GS
2-SF7: SHFR; $\overline{SF7}$: GS
3-NOT USED

DR MULTIPLEXOR [58-59]; DRX:
Ø-SHFR
1-GD
2-DF7: SHFR; $\overline{DF7}$: GD
3-CLEAR DR

CONSOLE DATA LIGHTS
"DATA PATHS"

SRMX

DRMX

SR CLOCK [57]; SRK:
Ø-NO CLOCK
1-LOAD

SR

DR

SHIFT REGISTER
DR CLOCK [55-56]; DRK
Ø-DON'T CLOCK
1-SHIFT RIGHT
2-SHIFT LEFT
3-LOAD

BUS COND [24-26]; BSC:
Ø-DATI
1-SRC1 DATI
2-KERNAL DATI
3-SRC2 DATI
4-FC
5-DATO
6-BSOP1
7-BSOP2

BUS DELAY [37-38]; BSD
Ø-NO PAUSE
1-INTR PAUSE
2, 3} BUS PAUSE
(SEE NOTE 1 ON FLOWS 1)

SHIFT COUNTER [33-36]; SHC:
Ø-NO COUNT
1-COUNT
2-LOAD (DR-Ø5:ØØ)
3-LOAD (17)

SC

BAMX

VIRTUAL ADDRESS
BUS ADDRESS MULTIPLEXOR [37-38]; BAX:
Ø-DR
1-PCB
2-SR
3-FPU MAINT

MICRO ADDRESS FIELD [Ø-7]; UAD:
(SEE FLOWS)

BRANCH ENABLE [8-11]; BEN:
(USE FLOWS, Ø IF NOTHING SPECIFIED)

FORK ENABLE [12-13]; FEN:
Ø-NO FORK
1-FORK A
2-FORK B
4-FORK C

INTERNAL BUS [35-36]; IBS:
Ø-NO COMMAND
1-READ SW
2-LOAD PS
3-READ PS

BUS DATA (OUT)

FP ACOM

UNIBUS DATA
CACHE DATA
BUS INTO (TIN)

BRMX

MISCELLANEOUS CONTROL SIGNALS [27-29]; MSC:
Ø-NO AFFECT
1-FP ATIN
2-NOT USED
3-SET CONF IF KERNEL MODE
4-SPL
5-CONDITIONAL BUST
6-BRO STROBE
7-BUST (BUS START)

CONSOLE DATA LIGHTS
"BUS REGISTER"

BR CLOCK [63]; BRK
Ø-NO CLOCK
1-LOAD

BR

IR

IR CLOCK [96]; IRK:
Ø-NO CLOCK
1-LOAD

BR MULTIPLEXOR [62]; BRX:
Ø-SHFR
1-BUS (DETERMINED BY ADDRESS)

* F... DATA PATH CONTROL REGISTER BIT
2 NOP
3 LOAD DR
4 LOAD DA
5 READ DA
6 READ BDS
7 READ BDA
8 READ DA

FP START [87]
2 LOAD OPERATION
1-FLOAT AGPOINT START

CLEAR SYNC [66]
Ø-NOP
1-CLEAR RIP-EPSYNC

MICROPROGRAM FIELD NAME, BIT POSITIONS, AND ENCODING SHOWN NEXT TO ASSOCIATED DATA PATH ELEMENT

*MOST SIGNIFICANT BIT IS BCT FIELD = 1 (READ FP)

DATA PATHS

FIRST USED ON OPTION/MODEL	QTY	DESCRIPTION	PART NO	ITEM NO
1170		PARTS LIST		

UNLESS OTHERWISE SPECIFIED DIMENSION IN INCHES
TOLERANCES
DECIMALS: XXX = .005, XX = .02, X = .1
ANGLES: ±0° 30'
REMOVE BURRS AND BREAK SHARP CORNERS SURFACE QUALITY ✓
MATERIAL
FINISH

DRN DATE
CHK DATE
ENG DATE
PROJECT DATE 12-9-75
PROD DATE

DIGITAL EQUIPMENT CORPORATION MAYNARD MASSACHUSETTS

TITLE
KB11-C
FLOW DIAGRAMS

NEXT HIGHER ASSY
A-DD-KB11-B

SIZE D | CODE FD | NUMBER KB11-C-1 | REV

SCALE
SHEET 1 OF 5
DIST

REVISIONS	REV	CHANGE NO	CHK

DEC FORM NO DRD 107-B

22

This drawing and specifications, herein, are the property of Digital Equipment Corporation and shall not be reproduced or copied or used in whole or in part as the basis for the manufacture or sale of items without written permission. COPYRIGHT © 1974
DIGITAL EQUIP CORP

NOTE:
1. t_* BUS PAUSE =
   t_2 FOR UNIBUS CYCLES
   t_5 FOR CACHE CYCLES

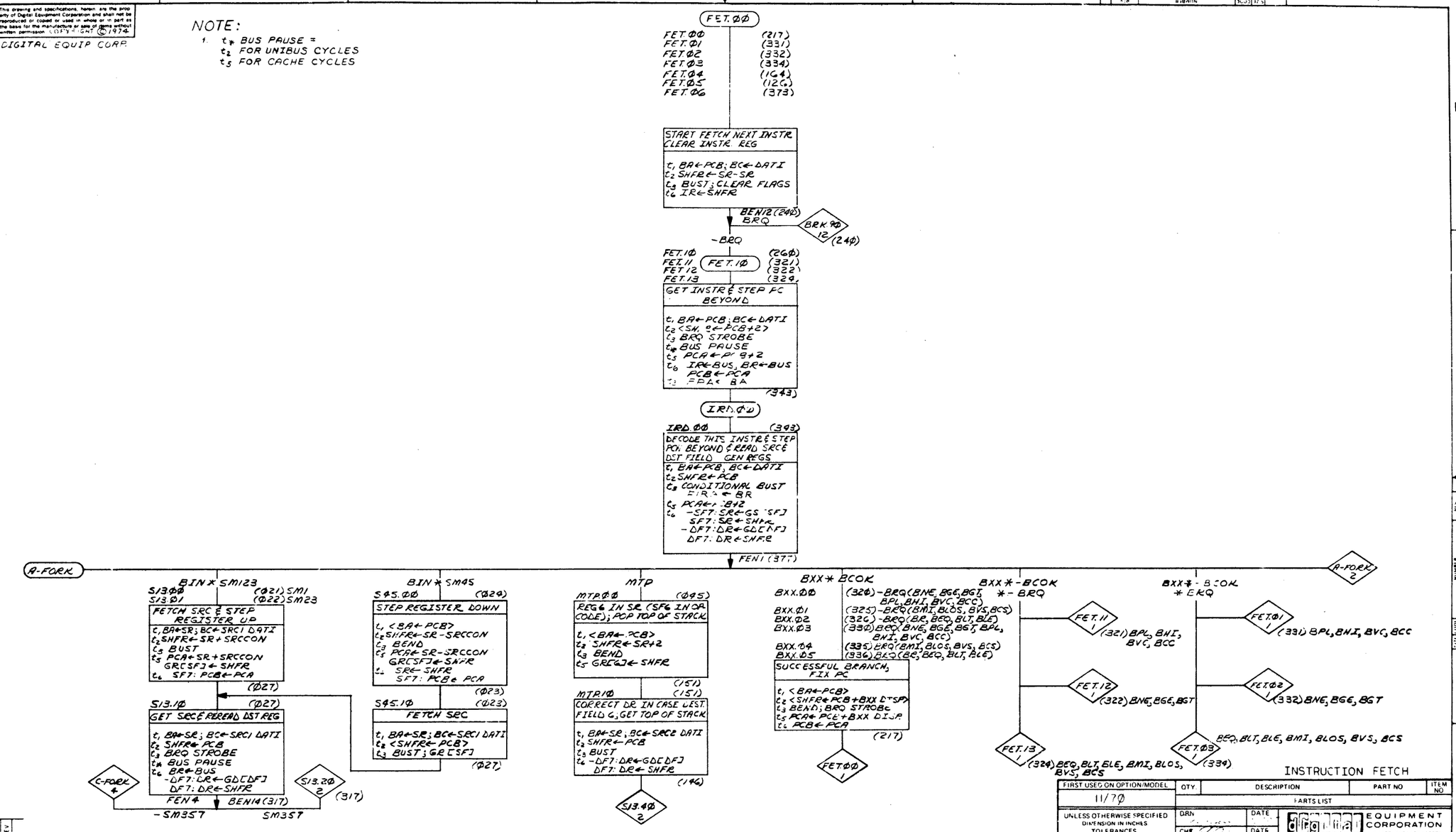

INSTRUCTION FETCH

FIRST USED ON OPTION/MODEL	QTY	DESCRIPTION	PART NO	ITEM NO
11/70		PARTS LIST		

UNLESS OTHERWISE SPECIFIED DIMENSION IN INCHES TOLERANCES
DECIMALS: XXX ± .005, XX ± .02, X ± .1; ANGLES: ± 0° 30'
REMOVE BURRS AND BREAK SHARP CORNERS SURFACE QUALITY ✓
MATERIAL —
FINISH —

DRN — DATE —
CHK — DATE 9-75
ENG — DATE 9-75
PROJ ENG — DATE 12-9-75
PROD — DATE —

Digital EQUIPMENT CORPORATION MAYNARD MASSACHUSETTS

TITLE: KB11-C FLOW DIAGRAMS (FLOWS 1)
NEXT HIGHER ASSY: B-CO-KB11-B
SIZE D | CODE FD | NUMBER KB11-C-1 | REV
SCALE —
SHEET 2 OF 12
DIST

REVISIONS: REV | CHANGE NO | CHK

DEC 10-W NC
DRD 102-B

This drawing and specifications, herein are the property of Digital Equipment Corporation and shall not be reproduced or copied or used in whole or in part as the basis for the manufacture or sale of items without written permission. COPYRIGHT © 1976

DIGITAL EQUIP. CORP.

A-FORK

BIN*SM67

SG7.ØØ (Ø26)
GET INDEX WORD; FIXUP SR, EDR TO POINT BEYOND INDEX WORD IF SF7 OR DF7
t, BA←PCB; BC←DATI
t₂ SMFR←PCB+2
t₃ BUS PAUSE
t₄ BR←BUS
-SF7: SR←GS[SF]
SF7: SR←SMFR
-DF7: DR←GS[DF]
DF7: DR←SMFR

(Ø54)
SG7.1Ø (Ø54)
DO INDEXING; FIX UP PC TO POINT BEYOND INDEX WORD
t, [BA←PCB]
t₂ SMFR←SR+BR
t₄ SR←SMFR
PCB←PCA

(141)
SG7.2Ø (141)
FETCH SRC; NO SL CHECK
t, BA←SR; BC←SRC1 DATI
t₂ <SMFR←PCB>
t₃ BUST; GR[CD]

(142)
SG7.3Ø (142)
GET SRC
t, BA←SR; BC←SRC1 DATI
t₂ <SMFR←PCB>
t₃ BRQ STROBE
t₄ BUS PAUSE
t₅ BR←BUS

FEN& BENI&(317) -SM357
C-FORK 4

S13.2Ø
S13.2Ø (317)
SRC ADDRS TO SR (INDIRECT)
t, <BA←PCB>
t₂ SMFR←BR
t₄ SR←SMFR

(143)
S13.3Ø (143)
FETCH SRC OPERAND; NO SL CHECK
t, BA←SR; BC←SRC2 DATI
t₂ <SMFR←PCB>
t₃ BUST; GR[CD]

S13.4Ø (146)
S13.4Ø (146)
GET SRC OPERAND
t, BA←SR; BC←SRC2 DATI
t₂ <SMFR←PCB>
t₃ BRQ STROBE
t₄ BUS PAUSE
t₅ BR←BUS

FEN& (377)
C-FORK 4

F/CLASS

FCP,ØØ (1F1)
MOVE GR TO BR
START FPU
t, <BA←PCB>
t₂ SMFR←DR
t₃ BEND
t₄ FP START
BR←SMFR

(34)

FCP,1Ø (314)
LD GR[EDF] TO FPU
t₃ FDR←BR
t, <BA←PCB>
<SMFR←BR>

FEN 4 (377)
C-FORK 4

RTI+RTT

RTIØØ (Ø12) RTI
RTIØ1 (Ø14) RTT
GET STACK POINTER (SP)
t, <BA←PCB>
t₂ <SMFR←BR>
t₄ BEND
t₅ SR←GS[6]

(156)
RTI.1Ø (156)
FETCH TOP OF STACK (NEW PC)
t, BA←SR; BC←DATI
t₂ <SMFR←BR>
t₃ BUST; GR[6]

(212)
RTI.2Ø (212)
STEP STACK POINTER (POP); ADRS OF NEXT WORD TO DR GET NEW PC
t, BA←SR; BC←DATI
t₂ SMFR←SR+2
t₃ BUS PAUSE
t₄ GR[6]←SMFR
t₅ BR←BUS
DR←SMFR

(213)
RTI.3Ø (213)
FETCH TOP OF STACK (NEW PS)
t, BA←DR; BC←DATI
t₂ <SMFR←PCB>
t₃ BUST; GR[7]
t₄ PCA←BR
t₅ PCB←PCA

(214)
RTI.4Ø (214)
STEP STACK POINTER, GET NEW PS
t, BA←DR; BC←DATI
t₂ SMFR←DR+2
t₃ BUS PAUSE
t₄ GR[6]←SMFR
t₅ BR←BUS

RTI.5Ø
RTI.5Ø (215)
NEW PS TO PS
t, <BA←DR>
t₂ <SMFR←PCB>
t₃ PS←BR

(172)
RTI.6Ø
RTI.6Ø (172)
CLOCK BREAKS
t, <BA←DR>
t₂ <SMFR←PCB>
t₃ BRQ STROBE
t₄ CONS ACKN

(217)
FET.ØØ
1

RTS

RTSØØ (Ø9Ø)
DST FIELD REG TO PC, GET STACK POINTER (SP)
t, <BA←PCB>
t₂ <SMFR←DR>
t₃ BEND
t₄ PCA←DR
t₅ SR←GS[6]
PCB←PCA

(223)
RTS.1Ø (223)
FETCH TOP OF STACK AND STEP SP
t, BA←SR, BC←DATI
t₂ SMFR←SR+2
t₃ BUST
t₅ GR[6]←SMFR

(229)
RTS.2Ø (229)
GET TOP OF STACK TO BR
t, BA←SR, BC←DATI
t₂ <SMFR←PCB>
t₃ BUS PAUSE
t₄ BR←BUS

(375)
RTS.3Ø (375)
BR (TOP OF STACK) TO DST FIELD REG.
t, <BA←SR>
t₂ SMFR←BR
t₃ BRQ STROBE
t₅ PCA←BR
GR[CLF]←SMFR
t₆ WT. PCB←PCA

(217)
FETØØ
1

SOB

SOBØØ (Ø57)
OLD PC TO BR & PC-OFF-SET TO PC
t, <BA←PCB>
t₂ SMFR←PCB
t₃ BEND
BRQ STROBE
t₅ PCA←PCB-SOB OFFSET
t₆ BR←SMFR
PCB←PCA

BEND1 (242) SR≠1
SA=1

SOB.1Ø (242)
FALL THRU SOB (OLD PC TO PC)
t, <BA←SR>
t₂ <SMFR←BR>
t₃ BRQ STROBE
t₅ PCA←BR
t₆ PCB←PCA

(262)
SOB.2Ø (262)
DECREMENT SRC FIELD REG (LOOP COUNT) & START NEXT INSTR FC RM
t, BA←PCB, BC←DATI
t₂ SMFR←SR-1
t₃ BUST
t₅ GR[SF]←SMFR

BENI2 (2ØØ) BRQ BRK.9Ø 12 (24Ø)
-BRQ
FET.1Ø 1 (26Ø)

MARK

MRKØØ (Ø47)
PC+OFFSET TO DR & RS TO SR
t, <BA←PCA>
t₂ SMFR←PCB+MARK OFFSET
t₃ BEND
t₆ SR←GS[5]
DR←SMFR

(252)
MRK.1Ø (252)
RS TO PC; DR POINTS TO TOP OF STACK
t, BA←DR; BC←DATI
t₂ <SMFR←SR>
t₃ BUST
t₅ PCA←SR
t₆ PCB←PCA

(235)
MRK.2Ø (235)
GET TOP OF STACK, STEP SP
t, BA←DR; BC←DATI
t₂ SMFR←DR+2
t₃ BRQ STROBE
t₄ BUS PAUSE
t₅ GR[6]←SMFR
t₆ BR←BUS

(234)
MRK.3Ø (234)
START FETCH NEXT INSTR & TOP OF STACK TO RS
t, BA←PCB; BC←DATI
t₂ SMFR←BR
t₃ BUST
t₅ GR[RS]←SMFR

BENI2 (2ØØ) BRQ BRK.9Ø 12 (24Ø)
-BRQ
FET.1Ø 1 (26Ø)

A-FORK 3

CONTROL; FLOATING; INDEXED SOURCE

FIRST USED ON OPTION: MODEL	QTY	DESCRIPTION	PART NO	ITEM NO
11/70		PARTS LIST		

UNLESS OTHERWISE SPECIFIED DIMENSION IN INCHES TOLERANCES
DECIMALS: XXX .005, XX .02, X 1 — ANGLES: 1Ø
REMOVE BURRS AND BREAK SHARP CORNERS SURFACE QUALITY ✓
MATERIAL
FINISH

DRN — DATE
CHK'D — DATE
ENG — DATE 2-9-76
PW.) ENG — DATE 2-9-76
PROJ — DATE

NEXT HIGHER ASSY: B-CO-KB11-B

TITLE: KB11-C FLOW DIAGRAMS (FLOWS 2)

SIZE	CODE	NUMBER	REV
D	FD	KB11-C	

SCALE
SHEET 3 OF 15
DIST

REV	REVISIONS	CHANGE NO	CHK

BRUNING 40-522-19840
DEC-X-DRW-NO
DRD 102-B

D FD KB11-C

24

The drawing and specifications hereon are the property of Digital Equipment Corporation and shall not be reproduced or copied or used in whole or in part as the basis for the manufacture or sale of items without written permission. COPYRIGHT © 1974

DIGITAL EQUIP. CORP

A-FORK

RESET
RES.ØØ (ØØ)

RES.ØØ (Ø15)
GET RØ TO DR
t1 <BA←PCB>
t2 <SHFR←BR>
t3 BENØ
t4 DR←GD[Ø]
(255)

RES.1Ø (255)
INIT IF IN KERNEL MODE
t1 (BA←PCB>
t2 <SHFR←DR>
t3 START INIT IF PS 14 (Ø)
(374)

RES.2Ø (379)
WAIT FOR INIT DONE SHOW PC AND RØ
t1 BA←PCB
t2 SHFR←DR
t3 BRQ STROBE
t4 CNSL ACKN
RIP BENIØ (334)

-RIP
FET.Ø3 1 (334)

HALT
HLT.ØØ (Ø1Ø)
GET RØ AND PS; PC TO SR
t1 <BA←PCB>
t2 SHFR←PCB
t3 BEND
t4 BR←PS
DR←GD[Ø]
SR←SHFR
(37E)

HLT.1Ø (316)
SET CONSOLE FLAG IF KERNEL MODE OTHERWISE TRAP
t1 (BA←PCB)
t2 (SHFR←BR]
t3 CONF←1 IF PS14(Ø)

BENØ6 (124)
BRK:(1) TRAØ2 12 (124)
BR14(Ø)
FET.Ø4 1 (1G4)

CCOP
CCP.ØØ (Ø99)
CONDITION CODE OPERATE INSTR
t1 <BA←PCB>
t2[SHFR←BR]
t3 BRQ STROBE BEND
t4 CC←IR (SET OR CLR SEL. BITS)
(217)

FET.ØØ 1

OP3
TRP.ØØ 13 (Ø13)

IOT
TRP.Ø1 13 (Ø19)

OP7
RSD.Ø1 12 (Ø17)

WAIT
WAT.ØØ (Ø11)
READ RØ AND SHOW IT SHOW PC IN ADRS LIGHTS
t1 BA←PCB
t2 SHFR←DR
t3 BEND
t4 DR←GD[Ø]

BENIE (244)
BRQ

-BRQ
WAT 1Ø (264)
WAT.11 (273)
NO BREAK REQUESTS
t1 BA←PCB
t2 SHFR←DR
t3 BRQ STROBE
(Ø11)

WAT.2Ø (299)
BREAK REQUEST; GET VECTOR WAS IT HALT SW.?
t1 <BA←PCB>
t2 SHFR←V INTR RAISE
t4 DR←SHFR BR←BUS
BEN 12(127)

CONF CON.Ø1 14 (1G7)
-CONF

WAT.3Ø (127)
IF T BIT WAIT; OTHERWISE GO SERVICE
t1 <BA←PCB7
t2 <SHFR←BR7

BENØ2(253)
-(PWRF+INTRF)
(PWRF+INTRF)
BRK11 12 (253)

OP22
RSD.Ø2 12 (Ø12)

SPL
SPL.ØØ (Ø93)
SET PRIORITY LEVEL
t1 <BA←PCB>
t2 <SHFR←BA>
t3 BEND
t3 SPL:PS<7:5>←BA<2:0> IF KERN MODE
(361)

SPL1Ø (361)
START FETCH OF NEXT INSTR
t1 BA←PCB; BC←DATI
t2 <SHFR←PCB>
t3 BUST CLR FLAGS
(26Ø)

FET.1Ø 1

RSVD +EMT+TRAP
RSD.ØØ 12 (ØØØ)

F/CLASS#-(FP PRESENT)
RSD.ØØ 12 (ØØØ)

A-RSVR 5

A-FORK

(JMP+JSR)*DMØ
RSDØØ 12 (ØØØ)

NEG.B DMØ
NEG.7Ø (3Ø1)
COMPLEMENT DST FIELD RS
t1 <BA←PCB>
t2 SHFR←ALU$ (A=DR, B=1)
t3 BEND
t4 SR←SHFR
(21Ø)

NEG.9Ø (218)
INCREMENT AND SAVE DST
t1 <BA←SR7
t2 SHFR←SR+1
t3 BRQ STROBE
t5 PCA←SR+1
-I/CLASS:GR[DF]←SHFR
t6 CCLD$ DF?:PCB←PCA
(217)

FET.ØØ 1

ASH*DMØ
ASH.1Ø 7 (Ø52)

ASHC*DMØ
ASC.1Ø 7 (Ø53)

MFP*DMØ
MFP.8Ø 11 (Ø46)

E/CLASS*-[DF7+BRQ]*DMØ
EXC.8Ø
EXC.8Ø (Ø2Ø)
SRC MODE≠DST MODE Ø FINISH EXEC OF THIS AND FETCH NEXT INSTR
t1 BA←PCB:BC←DATI
t2 SHFR←ALU$ (A=DR, B=SR)
t3 BRQ STROBE
t4 BUS PAUSE
t5 -I/CLASS:GR[DF]←SHFR
t6 CCLD$ IR←BUS; BR←BUS PCB←PCA
(373)

IRDØØ 1

E/CLASS*[DF7+BRQ]*DMØ
EXC.9Ø (Ø3Ø)
SOURCE≠DST MODE Ø FINISH EXECUTE OF THIS INSTR
t1 <BA←PCB>
t2 SHFR←ALU$ (1Ø=DR, Ø=SR)
t3 BEND BRQ STROBE
t5 PCA←ALU$ -I/CLASS:GR[DF]←SHFR
t6 CCLD$ DF?:PCB←PCA
(217)

FETØØ 1

MUL*DMØ
MUL.8Ø (Ø58)
SETUP SHIFT COUNTER
t1 <BA←PCB>
t2 <SHFR←DR>
t3 BEND SC←17
(1Ø2)

MULIØ 8

DIV*DMØ
DVS.ØØ (Ø51)
DIVISOR TO BR
t1 <BA←PCB>
t2 SHFR←DR
t3 BEND
t4 BR←SHFR
(261)

DIVØØ 9

P/CLASS:=SWAB+CLR.B+COM.B+INC.B+DEC.B +NEG.B+ADC.B+SBC.B+ASR.B+ASL.B+ ROR.B+RGL.B+BIC.B+BIS.B+ADD+SUB +SXT+MOVB+XOR
I/CLASS:=TST.B+CMP.B+BIT.B+MUL+DIV+MFP
E/CLASS:=[F/CLASS*-NEG.B]+MOV+TST.B+CMP.B +BIT.B

A-FORK 5

EXECUTE NO MEM REF

FIRST USED ON OPTION/MODEL	QTY	DESCRIPTION	PART NO	ITEM NO
11/7Ø		PARTS LIST		

UNLESS OTHERWISE SPECIFIED
UNLESS OTHERWISE SPECIFIED DIMENSION IN INCHES
TOLERANCES DECIMALS ± .005 FRACTIONS ± 1/64 ANGLES ± 0°30
FINAL SURFACE QUALITY REMOVE BURRS AND BREAK SHARP CORNERS
MATERIAL
FIN.SH

DRN [illegible] DATE 9-1-
CHK'D [illegible] DATE 12-4-74
ENG [illegible] DATE 2-7-75
PROJECT LD [illegible] DATE 12-9-75
PROJ [illegible] DATE 1-7-75
T HIGHER ASSY B-DD-KB11-B
SCALE
SHEET 4 OF 15

DIGITAL EQUIPMENT CORPORATION

TITLE KB11-C FLOW DIAGRAMS (FLOWS 3)

SIZE D | CODE FD | NUMBER KB11-C-1 | REV
DIST

REVISIONS | REV | CHANGE NO | CHK

DEC FORM NO DPD 102A

KB11-C

20

This drawing and specifications, herein, are the property of Digital Equipment Corporation and shall not be reproduced or copied or used in whole or in part as the basis for the manufacture or sale of items without written permission. © 1974
DIGITAL EQUIP. CORP.

C-FORK

DMØ* - F/CLASS *-DF7*SRØ(Ø)

DMØ* - F/CLASS *-DF7*SRØ(1)

DØØ.8Ø (25Ø)
ODD BYTE SRC, RIGHT JUSTIFY
t_1 <BA←DR>
t_2 SHFR←SWAP(BR)
t_8 BRQ STROBE
t_4 BR←SHFR
(2Ø5)

DMØ* - F/CLASS *DF7*SRØ(Ø)

DØ7.1Ø (2Ø3)
MODIFYING THE PC
t_1 <BA←DR>
t_2 SHFR←BR
t_4 SR←SHFR
(Ø3Ø)

DMØ* - F/CLASS *DF7*SRØ(1)

DØ7.ØØ (2Ø2)
MODIFYING THE PC-ODD BYTE
t_1 <BA←DR>
t_2 SHFR←SWAP(BR)
t_6 SR←SHFR
(Ø3Ø)

EXC.9Ø 3

DMØ* F/CLASS

FOR 2Ø (211)
GET CC AND SEE IF FP SYNC=1
t_1 <BA←ACCMX>
t_2 <SHFR←DR>
READ FPS
t_6 BR←B.S
FOR GØ
BENIT (3)

DØØ.9Ø (2Ø5)
DST MODEØ BUT SRC MODE NOT FINISH; EXECUTE THIS & FETCH NEXT
t_1 BA←PC; BC←DATI
t_2 SHFR←ALU $ (A=DR, B=BR)
t_3 BUST
t_5 -I/CLASS:GRCDF]←SHFR
t_6 CCLD $
BENI2 (24Ø)

BRQ
BRK.9Ø 12 (24Ø)
-BRQ
FET.1Ø 1 (2GØ)

FOP.3Ø (133)
GET CC'S AND WAIT FOR FP
-READ FPS
-3 BRQ STROBE
t_6 BR←BUS
BENIT (113)

-(BRQ+SYNC)

BRQ

SYNC*-BRQ
FOP.3E (173)
TELL FPU TO EXECUTE
-FP START
<BA←ACOM>
<SHFR←BR>
t_4 CC←BR IF EN FPP
BENT (333)

FOP.6Ø (153)
GET TO SERVICE, GET BACK PC
-READ FPA
t_6 BR←BUS
(245)

FSV.9Ø 3 (245)

FP REG WR

~FP REG WR

FET.26 (373)

FOP 5Ø (333)
GET FP DATA
BRQ STROBE
<BA←ACOM>
FP STAT→DATA
t_2 <SHFR←BR>
t_5 BR←BUS
(365)

FET 2B (365)
WRITE GR AND START FETCH
-BA←PCB
BC←DATI
SHFR←BR
GR[DF]←SHFR
-BUST
SEN12 (24Ø)

BRK.7Ø (24Ø)
BRQ

-BRQ
FET.1Ø (26Ø)

DMØ = IR(5-3)=Ø + FCLASS≠IR(11-6,=Ø

DESTINATION MODE Ø

FIRST USED ON OPTION/MODEL	QTY.	DESCRIPTION	PART NO	ITEM NO
11/7Ø		PARTS LIST		

UNLESS OTHERWISE SPECIFIED DIMENSION IN INCHES TOLERANCES
DECIMALS: XXX ± .ØØ6, XX ± .Ø2, X ± .1; ANGLES: ±Ø° 3Ø'
REMOVE BURRS AND BREAK SHARP CORNERS SURFACE QUALITY ✓
MATERIAL: --
FINISH: --

DES: engrn DATE 1-9-75
CHK'D: [illegible] DATE 2-5-75
[illegible] DATE 12-2-74
PROJ: [illegible] DATE 11-9-74
PM: [illegible] DATE 11/19/74

DIGITAL EQUIPMENT CORPORATION MAYNARD MASSACHUSETTS

TITLE: KB11-C
FLOW DIAGRAMS (FLOWS 4)

NEXT HIGHER ASSY: B-DD-KB11-B
SCALE: --
SHEET 5 OF 15

SIZE D | CODE FD | NUMBER KB11-C-1 | REV
DIST

DATA LOGIC KB11-C-1 D FD

REV	REVISIONS	CHANGE NO	CHK

BRUNING 40-322 15840
DEC FORM NO 6KD 102-B

26

This drawing and specifications, herein, are the property of Digital Equipment Corporation and shall not be reproduced or copied or used in whole or in part as the basis for the manufacture or sale of items without written permission.

DIGITAL EQUIP CORP.

A-FORK

DAC * DM12

D12.00 (ØØ1) DM1
D12.01 (ØØ2) DM2

DESTINATION ADRS IN DR
SRC OPERAND IN BR & SR ;
CHECK STACK LIM.

t_1 BA ← DR ; BC ← BSOP1
t_2 SHFR ← SR
t_3 BUST ; GR [DF]
t_4 BR ← SHFR

BEN13 (115)

C-FORK

DM12 * SRØ(Ø)

D:12.80 (111)

DST ADRS IN DR, SRC OPERAND IN BR & SR
CHECK STACK LIMIT

t_1 BA ← DR ; BC ← BSOP1
t_2 SHFR ← BR
t_3 BUST ; GR [DF]
t_4 SR ← SHFR

BEN15 (115)

DM12 * SRØ(1)

D12.90 (11Ø)

DST ADRS IN DR ; RIGHT JUSTIFY SRC
CHECK STACK LIMIT

t_1 BA ← DR ; BC ← BSOP1
t_2 SHFR ← SWAP (BR)
t_3 BUST ; GR [DF]
t_4 SR ← SHFR

BEN13 (115)

DM3 * SRØ(Ø)

D3Ø.80 (113)

FETCH DST OPERAND ADRS
SRC OPERAND IN SR & BR

t_1 BA ← DR ; BC ← DATI
t_2 SHFR ← BR
t_3 BUST ; GR [DF]
t_4 SR ← SHFR

(221)

DM3 * SRØ(1)

D3Ø.90 (112)

FETCH DST OPERAND ADRS
RIGHT JUSTIFY SRC TO SR

t_1 BA ← DR ; BC ← DATI
t_2 SHFR ← SWAP (BR)
t_3 BUST ; GR [DF]
t_4 SR ← SHFR

(221)

DAC * DM3

D3Ø.ØØ (ØØ3)

FETCH DST OPERAND ADRS
SRC IN SR

t_1 BA ← DR ; BC ← DATI
t_2 <SHFR ← SR>
t_3 BUST ; GR [DF]

(221)

D3Ø.10 (221)

GET DST OPERAND ADRS
STEP DST FIELD REGISTER

t_1 BA ← DR ; BC ← DATI
t_2 SHFR ← DR + DSTCON
t_* BUS PAUSE
t_5 PCA ← DR + DSTCON
GR [DF] ← SHFR
t_6 BR ← BUS
DF7 : PCB ← PCA

(233)

D12.20
6

O/CLASS

D12.60 (155)

STEP DST FIELD REG & OUTPUT SRC TO DST (DATO)

t_1 BA ← DR ; BC ← BSOP1
t_2 SHFR ← DR + DSTCON
t_3 BRQ STROBE
t_* BUS PAUSE
t_5 PCA ← DR + DSTCON
GR [DF] ← SHFR
t_6 DF7 : PCB ← PCA

(312)

-FJ/CLASS * -O/CLASS

D12.10 (175)

FINISH DATIP OR DATI & STEP DST FIELD REG

t_1 BA ← DR ; BC ← BSOP1
t_2 SHFR ← DR + DSTCON
t_* BUS PAUSE
t_3 BRQ STROBE
t_5 PCA ← DR + DSTCON
GR [DF] ← SHFR
t_6 BR ← BUS
DF7 : PCB ← PCA

BEN05 (137)
FEN2

FJ / CLASS

D12.70 (135)

STEP DST FIELD REGISTER

t_1 <BA ← DR>
t_2 SHFR ← DR + DSTCON
t_3 BEND
BRQ STROBE
t_5 PCA ← DR + DSTCON
GR [DF] ← SHFR
t_6 DF7 : PCB ← PCA

FEN2 (137)

B-FORK
7

D12.20 (312)

FETCH NEXT INSTR
SET CONDITION CODES

t_1 BA ← PCB ; BC ← DATI
t_2 SHFR ← BR
t_3 BUST ; GR [DF]
t_6 CCLD $

BEN12 (290)

BRQ — BRK.90 12 (240)

- BRQ

FET.10 1 (260)

DR Ø(1)

D12.30

D12.30 (137)

ODD BYTE DST, RIGHT JUSTIFY

t_1 <BA ← DR>
t_2 SHFR ← SWAP (BR)
t_6 BR ← SHFR

FEN2 (377)

B-FORK
7

DR Ø(Ø)

B-FORK
7

BIN := MOV.B + CMP.B + BIT.B + BIS.B + BIC.B + ADD + SUB
DAC := [I/CLASS + P/CLASS] * [-BIN + SMØ] + [MOV * SMØ] + ASH + ASHC + JMP + JSR
O/CLASS := MOV + MTP
F/CLASS := IR<15:12> (17)
J/CLASS := JMP + JSR
FJ/CLASS := F/CLASS + J/CLASS
BSOP1 := [I/CLASS : DATI] + [P/CLASS : DATIP] + [O/CLASS : DATO]
BSOP2 := [DATO] + [BYTE INSTRUCTION : DATOB]

DESTINATION MODES 1-3

FIRST USED ON OPTION/MODEL	QTY	DESCRIPTION	PART NO	ITEM NO
11/70		PARTS LIST		

UNLESS OTHERWISE SPECIFIED
UNLESS OTHERWISE SPECIFIED
DIMENSION IN INCHES
TOLERANCES
DECIMALS ± .005 FRACTIONS ± 1/64 ANGLES ± 0°30'
FINAL SURFACE QUALITY / REMOVE BURRS AND BREAK SHARP CORNERS

MATERIAL —
FINISH —

DRN — DATE
CHK — DATE
ENG — DATE 7-75
PROJ MGR — DATE 1-9-76
PMGR — DATE 3-

NEXT HIGHER ASSY B-DD-KB11-B
SCALE —
SHEET 6 OF 15

DIGITAL EQUIPMENT CORPORATION

TITLE KB11-C
FLOW DIAGRAMS
(FLOWS 5)

SIZE D | CODE FD | NUMBER KB11-C-1 | REV
DIST

REVISIONS | REV | CHANGE NO | CHK

DEC-11-OFMA-A-D
DRD 11-2-A

This drawing and specifications herein are the property of Digital Equipment Corporation and shall not be reproduced or copied or used in whole or in part as the basis for the manufacture or sale of items without written permission. - Rev. G, M-7 (C) 11-70

A-FORK

C-FORK

DM45*SRØ(Ø)

D45.8Ø (115)
STEP DST FIELD REGISTER
t1 <BA←DR>
t2 SHFR←DR-DSTCON
t5 PCA←DR-DSTCON
GRCDF]←SHFR
t6 DR←SHFR
DF7: PCB←PCA

BENØI(121)

-DM357

DM357

DØ.2Ø (121)
DATIP DATI, DATO DST
SRC OPERAND TO SR;
CHECK STACK LIMIT
t1 BA←DR; BC←BSOP1
t2 SHFR←BR
t3 BUST; GRCDF]
t6 SR←SHFR

BEN15(157)
FEN2

D5Ø.2Ø (161)
FETCH DST OPERAND ADRS; SRC OPERAND TO SR
t1 BA←DR; BC←DATI
t2 SHFR←BR
t3 BUST; GRCDF]
t6 SR←SHFR

(231)

DIØ.1Ø
6

DM45*SRØ(1)

D45.9Ø (118)
STEP DST FIELD REGISTER; ODD BYTE SOURCE
t1 <BA←DR>
t2 SHFR←DR-DSTCON
t3 BRQ STROBE
t5 PCA←DR-DSTCON
GRCDF]←SHFR
t6 DR←SHFR
DF7: PCB←PCA

BENØI(131)

-DM357

DØ.3Ø (131)
DATIP DATI, DATO DST
RIGHT JUSTIFY SRC TO SR
CHECK STACK LIMIT
t1 BA←DR; BC←BSOP1
t2 SHFR←SWAP(BR)
t3 BUST; GRCDF]
t6 SR←SHFR

BEN15(177)
FEN2

-FJ/CLASS

DIØ.6Ø
6
(177)

FJ/CLASS

B-FORK
7

DM357

D5Ø.3Ø (171)
FETCH DST OPERAND ADRS; RIGHT JUSTIFY SRC TO SR
t1 BA←DR; BC←DATI
t2 SHFR←SWAP(BR)
t3 BUST; GRCDF]
t6 SR←SHFR

(231)

DIØ.1Ø

DIØ.1Ø (231)
GET DST OPERAND ADRS
t1 BA←DR; BC←DATI
t2 <SHFR←BR>
t* BUS PAUSE
t6 BR←BUS

(239)

DIØ.2Ø

DIØ.2Ø (239)
DST OPERAND ADRS TO DR
t1 <BA←DR>
t2 SHFR←BR
t3 BRQ STROBE
t6 DR←SHFR

(311)

DIØ.5Ø (311)
DATIP DATI, DATO DST
SRC OPERAND TO BR
t1 BA←DR; BC←BSOP1
t2 SHFR←SR
t3 BUST; GRCØ]
t6 BR←SHFR

BEN15(157)
FEN2

-O/CLASS*-FJ/CLASS

DIØ.6Ø

DIØ.6Ø (177)
FINISH DATIP, DATI DST
t1 BA←DR; BC←BSOP1
t2 <SHFR←BR>
t* BUS PAUSE
t6 BRQ STROBE
t6 BR←BUS

BEN15(137)
FEN2

DR(1)

D12.3Ø
5
(137)

DR(Ø)

B-FORK
7

O/CLASS

DIØ.4Ø

DIØ.4Ø (157)
FINISH DATO DST; LOAD CC'S
t1 BA←DR; BC←BSOP1
t2 SHFR←BR
t3 BRQ STROBE
t* BUS PAUSE
t6 CCLD$

(331)

FETØI
1

FJ/CLASS

B-FORK
7

DAC*DM45

D5Ø.ØØ (ØØ4) DM4
D5Ø.Ø1 (ØØ5) DM5

STEP DST FIELD REGISTER
t1 <BA←PCB>
t2 SHFR←DR-DSTCON
t3 BEND
t5 PCA←DR-DSTCON
GRCDF]←SHFR
t6 DR←SHFR
DF7: PCB←PCA

BENØI(122)

DM357

DIØ.ØØ

DIØ.ØØ (162)
FETCH DST OPERAND ADRS
t1 BA←DR; BC←DATI
t2 <SHFR←PCB>
t3 BUST; GRCDF]

(231)

-DM357

DM357

D1Ø.3Ø (122)
DATIP DATI, DATO DST
SRC OPERAND TO BR
CHECK STACK LIMIT
t1 BA←DR; BC←BSOP1
t2 SHFR←SR
t3 BUST; SRCDF]
t6 BR←SHFR

BEN15(157)
FEN2

DMG7*SRØ(Ø)

DG7.8Ø (117)
FETCH INDEX WORD; SRC TO SR
t1 BA←PCB; BC←DATI
t2 SHFR←BR
t3 BUST; GRCØ]
t6 SR←SHFR

(ØØ6)

DMG7*SRØ(1)

DG7.9Ø (116)
FETCH INDEX WORD; RIGHT JUSTIFY SRC TO SR
t1 BA←PCB; BC←DATI
t2 SHFR←SWAP(BR)
t3 BUST; GRCØ]
t6 SR←SHFR

(ØØ6)

DAC*DMG7

DG7ØØ (ØØ6) DMG
DG7Ø1 (ØØ7) DM7

GET INDEX WORD; ADJUST DST IF DSF FIELD PC
t1 BA←PCB; BC←DATI
t2 SHFR←PCB+2
t* BUS PAUSE
t5 PCA←PCB+2
t6 BR←BUS
DF7: DR←GDCDF]
DF7: DR←SHFR

(251)

DG7.1Ø (251)
DO INDEXING, STEP PC;
t5 BA←PCB>
t2 SHFR←BR+DR
t3 BRQ STROBE
t6 DR←SHFR
PCB←PCA

BENØI(122)

-DM357

DM357

DIØ.ØØ
6
(162)

DESTINATION MODES 4-7

FIRST USED ON OPTION/MODEL	QTY	DESCRIPTION	PART NO	ITEM NO
11/70		PARTS LIST		

UNLESS OTHERWISE SPECIFIED DIMENSION IN INCHES TOLERANCES
DECIMALS: XXX - .005, XX - .02, X - .1; ANGLES: ±0° 30'
REMOVE BURRS AND BREAK SHARP CORNERS SURFACE QUALITY ✓
MATERIAL
FINISH

DRN — DATE
CHKD — DATE
ENG — DATE
PROJ ENGR — DATE 12-1-70
PROD — DATE 12-14-70

EQUIPMENT CORPORATION
MAYNARD MASSACHUSETTS

TITLE: KB11-C FLOW DIAGRAMS (FLOWS 6)

NEXT HIGHER ASSY: B-DD-KB1-B
SIZE/CODE: DFD
NUMBER: KB11-C-
REV:
SCALE:
SHEET 7 OF 15
DIST

REVISIONS | REV | CHANGE NO | CHK

DRAWING 45 B33 1984D
DEC FORM NO DRD 105-B

28

This drawing and specifications, herein, are the property of Digital Equipment Corporation and shall not be reproduced or copied or used in whole or in part as the basis for the manufacture or sale of items without written permission COPYRIGHT © 1974
DIGITAL EQUIP. CORP.

B-FORK

ASH

ASH.0Ø (ØG2)
SHIFT COUNT TO DR;
t, <BA ← DR>
t2 SHFR ← BR
t4 DR ← SHFR
(Ø58)

ASH.1Ø
ASH.1Ø (Ø5F)
LOAD STEP COUNTER WITH SHIFT COUNT
t, <BA ← PCB>
t2 <SHFR ← SR>
t3 BEND
SC ← DR
(3Ø3)
(3Ø5)
ASH.2Ø
STEP SC; SET COND CODES & SEE IF NO SHIFT
t, <BA ← DR>
t2 SHFR ← SR
t3 BRQ STROBE
SC ← SC ± 1
t4 CCLD4
CTEN ACC SHFR; C ← V ← Ø]
BEN Ø3 (217)

SC > Ø
ASH.4Ø
ASH.41 (257) (164)
SHIFT LEFT (ZERO INSERTION) CC'S KEPT CURRENT
t, <BA ← PCB>
t2 SHFR ← SHL (SR)
t3 BRQ STROBE
SC ← SC ± 1
t5 GR[SF] ← SHFR
t6 SR ← SHFR
CCLD5
CTEN ACC SHFR; C ← AMXIS
V ← VOLD ⊕ (SHFRIS ⊕ AMXIS)]
BEN Ø3 (126)
SC ≠ Ø

SC = Ø
FET Ø5 1 (126)

SC < Ø
ASH.3Ø (277)
SHIFT RIGHT SIGN EXTENDED; CC'S KEPT CURRENT
t, <BA ← FCO>
t2 SHFR ← SHFR (SR)
t3 BRQ STROBE
SC ← SC ± 1
t5 GR[SF] ← SHFR
t6 SR ← SHFR
CCLD5
BEN Ø3 (237)
SC ≠ Ø

SC = Ø
FET Ø7 1 (237)

SC = Ø
FET ØØ 1 (217)

ASHC

ASC.ØØ (ØG3)
SHIFT COUNT TO DR
t, <BA ← DR>
t2 SHFR ← BR
t4 DR ← SHFR
(Ø53)

ASC.1Ø
ASC.1Ø (Ø58)
LOAD STEP COUNTER & READ LO-ORDER OPERAND TO DR
t, <BA ← PCB>
t2 <SHFR ← SR>
t3 BEND
SC ← DR
t4 DR ← GDC SF, 1]
(3Ø6)
(3Ø6)
ASC.2Ø
STEP SC; SET COND CODES & SEE IF NO SHIFT
t, <BA ← DR>
t2 SHFR ← SR
t3 BRQ STROBE
SC ← SC ± 1
t4 BR ← SHFR
CCLD 4
CTEN ACC SHFR; C & V ← Ø]
BEN Ø3 (267)

SC < Ø
ASC.4Ø
(2G7)
SHIFT RIGHT; SR ← NI; DR ← LO; SET COND CODES ON NI
t, <BR ← DR>
t2 SHFR ← SHR (SR)
t3 BRQ STROBE
SC ← SC ± 1
t5 GR[SF] ← SHFR
t6 SR ← SHFR
DR ← RIGHT (DR)
(0 INSERTED)
CCLD5
CTEN ACC SHFR; C ← AMXIS
V ← VOLD ⊕ (SAFE S ⊕ AMXIS)]
BEN Ø3 (227)
SC ≠ Ø

SC = Ø
ASC.6Ø
ASC.61 (227) (136)
SHIFT DONE; SAVE LO ORDER. SET COND CODES ON LO; START FETCH NEXT INSTR.
t, BR ← PCB; BC ← DATI
t2 SHFR ← DR
t3 BUST
t5 GR[SF, 1] ← SHFR
t6 CCLD6
CN, C, & V N/A; Z ← Z OLD * SHFR = Ø]
BEN 12 (240)

SC > Ø
ASC.3Ø
ASC.31 (247) (176)
SHIFT LEFT; SR ← NI; DR ← LO; SET COND CODES ON NI
t, <BA ← DR>
t2 SHFR ← ALU $ (A ← SR, B ← L) [SHL (SR) + DR15]
t3 BRQ STROBE
SC ← SC ± 1
t5 GR[SF] ← SHFR
t6 SR ← SHFR
DR ← LEFT (DR) (0 INSERTED)
CCLD5
CTEN ACC SHFR; C ← AMXIS;
V ← VOLD ⊕ (SAFE S ⊕ AMXIS)]
BEN Ø3 (136)
SC ≠ Ø

SC = Ø
SC = Ø

-BRQ
FET 1Ø 1 (26Ø)

BRQ
BRK 9Ø 12 (24Ø)

F/CLASS

ADR 7Ø (Ø36)
DST ADRS TO BR
ENABLE FP ATTN
t, <BR ← DR>
t2 SHFR ← DR
t3 BEND
t4 GDC ← SHFR
FP ATTN
BEN ← 3Ø7)

B-FORK 8

-(SYNC ⊕ BRQ)
BRQ
SYNC ← BRQ

FST.6Ø 3 (327)
FST.7Ø 3 (347)
FST.ØC 3 (367)

ASH & ASC

FIRST USED ON OPTION/MODEL	QTY	DESCRIPTION	PART NO	ITEM NO.
11/70		PARTS LIST		

UNLESS OTHERWISE SPECIFIED DIMENSION IN INCHES TOLERANCES
DECIMALS: XXX ± .005, XX ± .02, X ± .1 — ANGLES: ± 0° 30'
REMOVE BURRS AND BREAK SHARP CORNERS SURFACE QUALITY ✓
MATERIAL
FINISH

DRAWN — DATE
CHECKED — DATE
ENG — DATE 12-7-74
PM — DATE 12-9-74
PM — DATE

DIGITAL EQUIPMENT CORPORATION MAYNARD MASSACHUSETTS

TITLE: KB11-C FLOW DIAGRAMS (FLOW'S 7)

NEXT HIGHER ASSY: B-DD-KB11-B
SCALE
SHEET 8 OF 15

SIZE	CODE	NUMBER	REV.
D	FD	KB11-C-1	

DIST

REV.	REVISIONS	CHANGE NO	CHK

BRUNING 40-332 15840
DEC FORM NO
DRD 109-B

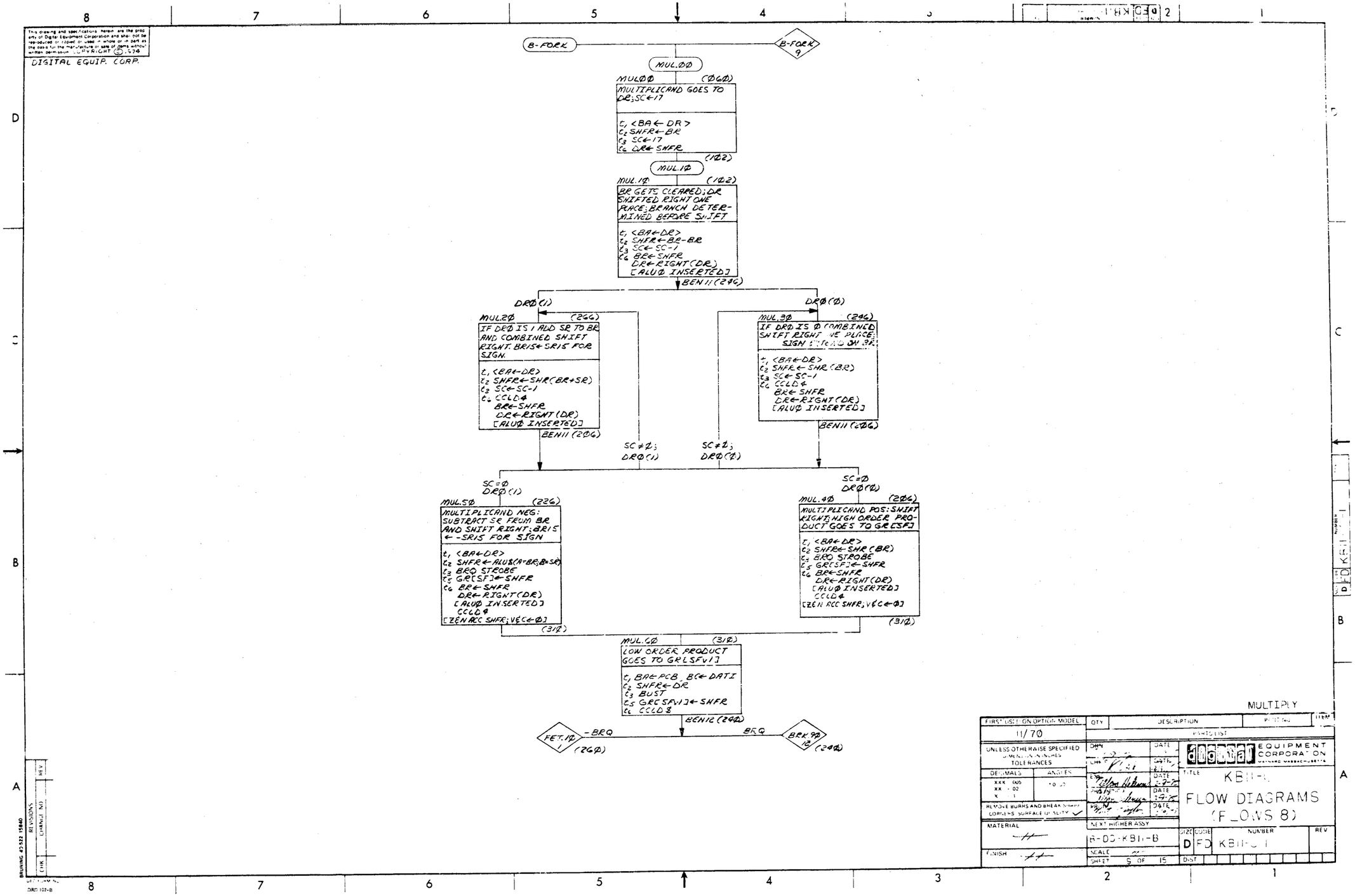

DIGITAL EQUIP. CORP.
B-FORK
B-FORK 9
MUL.ØØ
MULØØ (Ø6Ø)
MULTIPLICAND GOES TO DR;SC←17
t1 <BA←DR>
t2 SHFR←BR
t3 SC←17
t6 DR←SHFR
(1Ø2)
MUL.1Ø
MUL.1Ø (1Ø2)
BR GETS CLEARED;DR SHIFTED RIGHT ONE PLACE;BRANCH DETERMINED BEFORE SHIFT
t1 <BA←DR>
t2 SHFR←BR-BR
t3 SC←SC-1
t6 BR←SHFR
DR←RIGHT(DR)
[ALUØ INSERTED]
BEN11 (246)
DRØ(1)
DRØ(Ø)
MUL.2Ø (266)
IF DRØ IS 1 ADD SR TO BR AND COMBINED SHIFT RIGHT. BR15←SR15 FOR SIGN.
t1 <BA←DR>
t2 SHFR←SHR(BR+SR)
t3 SC←SC-1
t6 CCLD4
BR←SHFR
DR←RIGHT(DR)
[ALUØ INSERTED]
BEN11 (2Ø6)
MUL.3Ø (246)
IF DRØ IS Ø COMBINED SHIFT RIGHT ONE PLACE; SIGN EXTEND ON BR
t1 <BA←DR>
t2 SHFR←SHR(BR)
t3 SC←SC-1
t6 CCLD4
BR←SHFR
DR←RIGHT(DR)
[ALUØ INSERTED]
BEN11 (2Ø6)
SC≠Ø; DRØ(1)
SC≠Ø; DRØ(Ø)
SC=Ø DRØ(1)
SC=Ø DRØ(Ø)
MUL.5Ø (226)
MULTIPLICAND NEG: SUBTRACT SR FROM BR AND SHIFT RIGHT;BR15 ←-SR15 FOR SIGN
t1 <BA←DR>
t2 SHFR←ALU$(A+BR;B=SR)
t3 BRQ STROBE
t5 GR[SF]←SHFR
t6 BR←SHFR
DR←RIGHT(DR)
[ALUØ INSERTED]
CCLD4
[ZEN ACC SHFR;V&C←Ø]
(31Ø)
MUL.4Ø (2Ø6)
MULTIPLICAND POS: SHIFT RIGHT;HIGH ORDER PRODUCT GOES TO GR[SF]
t1 <BA←DR>
t2 SHFR←SHR(BR)
t3 BRQ STROBE
t5 GR[SF]←SHFR
t6 BR←SHFR
DR←RIGHT(DR)
[ALUØ INSERTED]
CCLD4
[ZEN ACC SHFR;V&C←Ø]
(31Ø)
MUL.6Ø (31Ø)
LOW ORDER PRODUCT GOES TO GR[SFV1]
t1 BA←PCB_BC←DATI
t2 SHFR←DR
t3 BUST
t5 GR[SFV1]←SHFR
t6 CCLD$
BEN12 (24Ø)
FET.1Ø 1 (26Ø)
-BRQ
BRQ
BRK.9Ø 12 (24Ø)
MULTIPLY
FIRST USED ON OPTION MODEL
11/70
QTY
DESCRIPTION
PARTS LIST
UNLESS OTHERWISE SPECIFIED DIMENSIONS IN INCHES TOLERANCES
DECIMALS
ANGLES
REMOVE BURRS AND BREAK SHARP CORNERS SURFACE QUALITY
MATERIAL
FINISH
NEXT HIGHER ASSY
B-DD-KB11-B
SCALE
SHEET 9 OF 15
digital EQUIPMENT CORPORATION
TITLE
KB11-
FLOW DIAGRAMS
(FLOWS 8)
SIZE D
CODE FD
NUMBER KB11-
REV
DIST
REVISIONS
CHANGE NO
REV
CHK
BRUNING 43-522 15840
DRD 102-B

This drawing and specifications, herein, are the property of Digital Equipment Corporation and shall not be reproduced or copied or used in whole or in part as the basis for the manufacture or sale of items without written permission. COPYRIGHT © 1976
DIGITAL EQUIP. CORP.

B-FORK

B-FORK

DIVØØ

DIVØØ (ØG1)
DIVISOR GOES TO SR, LOAD CONDITION CODE TO SEE IF IT IS ZERO; HIGH ORDER DIVIDEND GOES TO DR
t1 <BA ← DR>
t2 SHFR ← BR
t4 SR ← SHFR
DR ← GDCSF]
CCLD$
[N ← F ACC SHFR; V ← Ø]

DIV.1Ø (254)
BRANCH ON DIVISOR Ø; LOAD CONDITION CODE TO TEST THE SIGN OF DIVIDEND
t1 <BA ← SR>
t2 SHFR ← DR
t4 CCLD$
[N ← F ACC SHFR; V ← Ø]

BENØ2 (232)

Z

DVC.ØØ (272)
DIVISOR IS ZERO, ABORT DIVIDE; SET C AND V BIT; GO FETCH NEXT INSTRUCTION
t1 <BA ← DR>
t2 <SHFR ← SR>
t3 BRQ STROBE
t6 CCLD $
(1G4)

FET.Ø$ 1

-Z

DIV 2Ø (232)
DIVISOR IS NON ZERO; BRANCH ON DIVIDEND NEG; SR HAS DIVISOR; DR HAS HIGH ORDER DIVIDEND
t1 <BA ← DR>
t2 <SHFR ← SR>
BENØ4 (241)

N

DVN.ØØ (261)
DIVIDEND IS NEGATIVE, GOT TO MAKE IT POSITIVE. GET LOW ORDER DIVIDEND IN SR; BR HAS DIVISOR SAVED
t1 <BA ← DR>
t2 <SHFR ← SR>
t3 CLEAR DR
t6 SR ← GSCSF V1]
(1ØØ)

-N

DVP.ØØ

DVN.1Ø (1ØØ)
FIND TWO'S COMPLEMENT OF LOW ORDER AND WRITE IT BACK; OR IS Ø
t1 <BA ← DR>
t2 SHFR ← DR-SR
t5 GRCSF V1] ← SHFR
(1Ø5)

DVN.2Ø (1Ø5)
TEST IF THERE WAS A CARRY OUT OF THE LOW ORDER DIVIDEND; PUT IT IN DR
t1 <BA ← DR>
t2 SHFR ← DR-SR
t6 DR ← LEFT (DR)
[ALU CARRY INSERTED]
(1Ø6)

DVN.3Ø

DVN.3Ø

DVN.3Ø (1Ø6)
MAKE DR Ø IF THERE WAS A CARRY OR A -1 IF NOT; GET THE HIGH ORDER DIVIDEND TO SR
t1 <BA ← DR>
t2 SHFR ← DR-1
t6 SR ← GSCSF]
DR ← SHFR
(Ø55)

DVN.4Ø (Ø55)
FIND TWO'S COMPLEMENT OF HIGH ORDER DIVIDEND IF THERE WAS A CARRY FROM LOW ORDER, ELSE ONE-S COMPLEMENT; WRITE IT BACK; LOAD COND CODES
t1 <BA ← DR>
t2 SHFR ← DR-SR
t5 GRCSF] ← SHFR
t6 DR ← SHFR
CCLD$
[N ← F ACC SHFR; V ← Ø]
(Ø5G)

DVN.5Ø (Ø5G)
SR GETS DIVISOR; BRANCH ON SIGN OF DIVIDEND
t1 <BA ← DR>
t2 SHFR ← BR
t6 SR ← SHFR
BENØ4 (243)

N

DVE.1Ø (263)
THE TWO'S COMPLEMENT OF A NEGATIVE NUMBER IS STILL NEGATIVE; MUST BE MOST NEG. NO. ABORT DIVIDE; SET V BIT
t1 <BA ← DR>
t2 <SHFR ← BR>
t6 CCLD $
(195)

DVE.2Ø 9

-N

DVN.6Ø (243)
HIGH ORDER DIVIDEND GOES TO BR; SR HAS DIVISOR
t1 <BA ← DR>
t2 SHFR ← DR
t4 BR ← SHFR
(1Ø7)

DVN.7Ø (127)
DR GETS LOW ORDER DIVIDEND; SC GETS THE COUNT; SET N TO SHOW DIVIDEND WAS NEG
t1 <BA ← DR>
t2 SHFR ← -DR
t3 SC ← 17
t6 DR ← GDCSF V1]
CCLD$
[N ← F ACC SHFR; V ← Ø]
(197)

DIV.3Ø 9

DVP.ØØ

-N

DVP.ØØ (241)
DIVIDEND IS POSITIVE; BR GETS THE HIGH ORDER DIVIDEND; SR HAS DIVISOR
t1 <BA ← SR>
t2 SHFR ← DR
t4 BR ← SHFR
(1Ø3)

DVP.1Ø (1Ø3)
DR GETS THE LOW ORDER DIVIDEND; SC GETS THE COUNT
t1 <BA ← SR>
t2 <SHFR ← DR>
t3 SC ← 17
t6 DR ← GD [SFV1]
(147)

DIV.3Ø

DIV.3Ø

DIV.3Ø (147)
START FIRST DIVISION, SHIFT BR LEFT; INSERT DR1S, SET Z BIT
t1 <BA ← DR>
t2 SHFR ← ALU$(A=BR, B=1)
t4 BR ← SHFR
CCLD$
[N ← N, C, V, $ Z ← 1]

BEN16 (346)

SR1S (Ø)

DIV.4Ø (346)
DIVISOR POSITIVE DO A SUBTRACTION TO FIND BITS OF QUOTIENT
t1 <BA ← DR>
t2 SHFR ← BR-SR
t3 SC ← SC-1
t4 BR ← SHFR
DR ← LEFT (DR)
[ALU CARRY INSERTED]
CCLD6
[Z ← ZCLD * SHFR = Ø]
(313)

SR1S (1)

DIV.5Ø (346)
DIVISOR IS NEGATIVE. DO AN ADDITION TO FIND BITS OF QUOTIENT
t1 <BA ← DR>
t2 SHFR ← BR+SR
t3 SC ← SC-1
t4 BR ← SHFR
DR ← LEFT (DR)
[ALU CARRY INSERTED]
CCLD6
[Z ← ZCLD * SHFR = Ø]
(313)

DIV.6Ø (313)
CONTINUE DIVIDE IF QUOTIENT WILL BE POS. BUT ALLOW FOR MOST NEG NO. IF QUOT. IS TO BE NEG.
t1 <BA ← DR>
t2 <SHFR ← BR>
BEN05 (145)

DIV QUIT

DVE.2Ø

DVE.2Ø (145)
DIVISION OVERFLOW; RESULTS WON'T FIT IN 16 BITS, V BIT IS SET; GO FETCH NEXT INSTR.
t1 <BA ← SR>
t2 SHFR ← DR
t3 BRQ STROBE
t4 CCLD7
[C ← ALU CARRY]
(164)

FET.Ø$ 1

-DIV QUIT

DIV.7Ø (165)
FINISH DIVISION, SHIFT BR LEFT & INSERT DR1S; DR IS FORMING QUOTIENT & BR REMAINDER
t1 <BA ← DR>
t2 SHFR ← ALU$(A=BR, B=1)
t4 BR ← SHFR
BENØØ (323)

DIV SUB

DIV.8Ø (323)
SIGNS OF DIVISOR & PART. REMAINDER ARE SAME SUBTRACT; DRØ IS - SIGN OF REMAINDER
t1 <BA ← DR>
t2 SHFR ← BR-SR
t3 SC ← SC-1
t4 BR ← SHFR
DR ← LEFT (DR)
[ALU CARRY INSERTED]
BEN03 (125)

-DIV SUB

DIV.9Ø (343)
SIGNS OF DIVISOR & PARTIAL REMAINDER ARE DIFFERENT ADD, DRØ IS - SIGN OF REMAINDER
t1 <BA ← DR>
t2 SHFR ← BR+SR
t3 SC ← SC-1
t4 BR ← SHFR
DR ← LEFT (DR)
[ALU CARRY INSERTED]
BEN03 (125)

SC ≠ Ø

SC = Ø

DVC.ØØ Ø (125)

DIVIDE

FIRST USED ON OPTION MODEL	QTY	DESCRIPTION	PART NO	ITEM NO
11/70		PARTS LIST		

UNLESS OTHERWISE SPECIFIED DIMENSION IN INCHES TOLERANCES
DECIMALS: XXX ± .005, XX ± .02, X ± .1 — ANGLES: ± 0° 30'
REMOVE BURRS AND BREAK SHARP CORNERS SURFACE QUALITY ✓
MATERIAL: ##
FINISH: —

		DATE
DRN		
CHK'D		12-9-76
ENG		12-9-76
PROJ ENG		12-9-76
APVD		

NEXT HIGHER ASSY: B-DD-KB11-B
SCALE:
SHEET 10 OF 15

digital EQUIPMENT CORPORATION MAYNARD MASSACHUSETTS

TITLE: KB11-[illegible] FLOW DIAGRAMS (FLOWS 9)

SIZE	CODE	NUMBER	REV
D	FD	KB11-[illegible]-1	

DIST

REVISIONS	REV	CHANGE NO	CHK

BRUNING 40-522 15940
DRD 102-B

This drawing and specifications, herein, are the property of Digital Equipment Corporation and shall not be reproduced or copied or used in whole or in part as the basis for the manufacture or sale of items without written permission.

DIGITAL EQUIP. CORP.

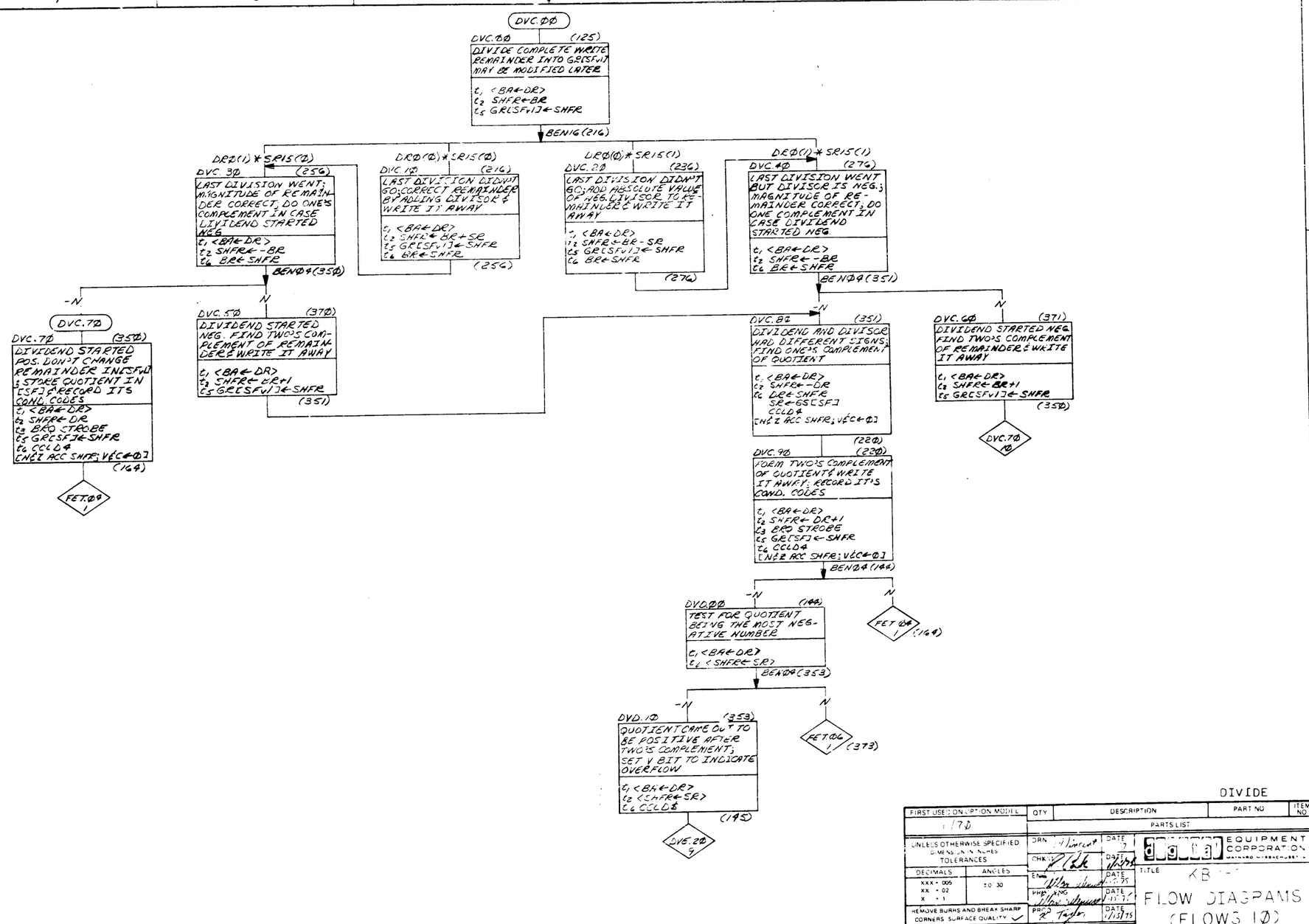

DIVIDE

FIRST USED ON OPTION MODEL	QTY	DESCRIPTION	PART NO	ITEM NO
1/7Ø		PARTS LIST		

UNLESS OTHERWISE SPECIFIED DIMENSION IN INCHES TOLERANCES

DECIMALS	ANGLES
XXX ± .005	±0°30'
XX ± .02	
X ± .1	

REMOVE BURRS AND BREAK SHARP CORNERS. SURFACE QUALITY ✓

MATERIAL —//—

FINISH —//—

DRN [signature] DATE 7

CHK [signature] DATE 1/2/75

ENG [signature] DATE 1/2/75

PROJ ENG [signature] DATE 1/2/75

PROD R. Taylor DATE 1/15/75

NEXT HIGHER ASSY B-DD KB1-B

SCALE —//—

SHEET 11 OF 15

digital EQUIPMENT CORPORATION MAYNARD, MASSACHUSETTS

TITLE KB1-1

FLOW DIAGRAMS (FLOWS 1Ø)

SIZE D CODE FD NUMBER KB11-C-1 REV.

DIST

REVISIONS: CHK | CHANGE NO | REV

BRUNING 40 522 15840

DEC FORM NO DRD 102-B

32

"THIS DRAWING AND SPECIFICATIONS, HEREIN, ARE THE PROPERTY OF DIGITAL EQUIPMENT CORPORATION AND SHALL NOT BE REPRODUCED OR COPIED OR USED IN WHOLE OR IN PART AS THE BASIS FOR THE MANUFACTURE OR SALE OF ITEMS WITHOUT WRITTEN PERMISSION.
COPYRIGHT ©1974, DIGITAL EQUIPMENT CORPORATION"

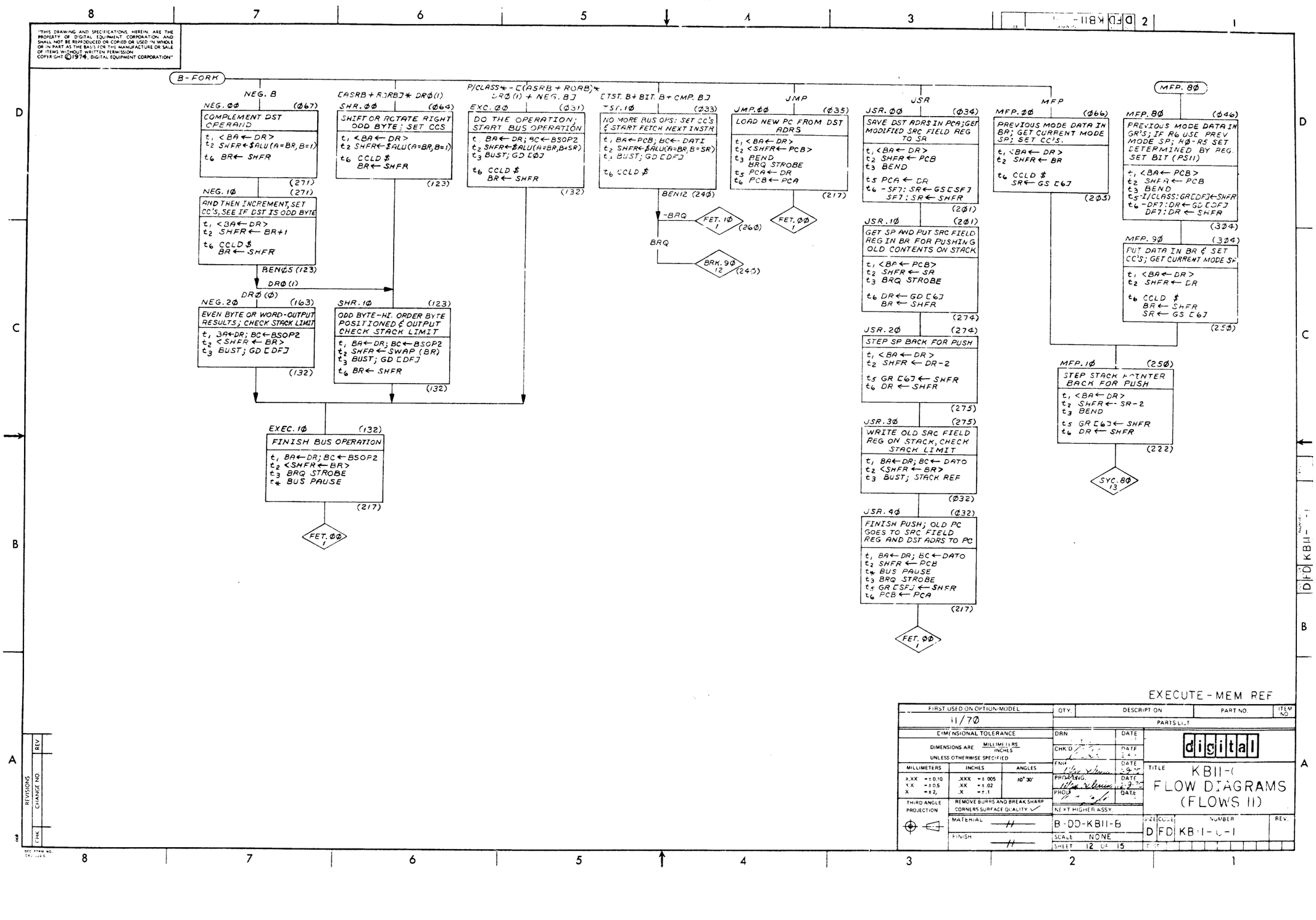

EXECUTE - MEM REF

FIRST USED ON OPTION/MODEL	QTY.	DESCRIPTION	PART NO.	ITEM NO.
11/70	PARTS LIST			

DIMENSIONAL TOLERANCE			DRN	DATE
DIMENSIONS ARE MILLIMETERS / INCHES UNLESS OTHERWISE SPECIFIED			CHK'D	DATE
MILLIMETERS	INCHES	ANGLES	ENG	DATE 9-75
X.XX = ±0.10	.XXX = ±.005	±0° 30'	PROJ MNG.	DATE 9-75
X.X = ±0.5	.XX = ±.02		PHOJ	DATE
X = ±2,	.X = ±.1		NEXT HIGHER ASSY	
THIRD ANGLE PROJECTION	REMOVE BURRS AND BREAK SHARP CORNERS SURFACE QUALITY ✓		MATERIAL — //	B-DD-KB11-B
			FINISH — //	SCALE NONE

digital

TITLE KB11-(FLOW DIAGRAMS (FLOWS 11)

SIZE D | CODE FD | NUMBER KB11-(-1 | REV.

SHEET 12 OF 15

REVISIONS	REV	CHANGE NO	CHK

DEC 47 BM NO. CM-1126 C

This drawing and specifications, herein, are the property of Digital Equipment Corporation and shall not be reproduced or copied or used in whole or in part as the basis for the manufacture or sale of items without written permission.
© 1972
DIGITAL EQUIP. CORP.

ZAP 00 (000)
ABORTED OPERATION OR POWER ON SEQUENCE
t1 <BA←PCB>
t2 <SHFR←DR>
t3 BEND
BRQ STROBE

BRK 90 (240)
BRK.90
BRQ TO BE SERVICED; END LAST OPERATION
t1 <BA←PCB>
t2 <SHFR←DR>
t3 BEND

RSD.00
RSD 00 (000)
RSD 01 (017)
RSD 02 (042)
DR GETS VECTOR ADDR; PS TO BR
t1 <BA←PCB>
t2 SHFR←TV
t3 BEND
t4 DR←SHFR
BR←PS
(345)

RSD.10 (345)
LEFT SHIFT VECTOR ADDR TO CORRECT REG. STORE IN DR
t1 <BA←DR>
t2 SHFR←SHL(DR)
t4 DR←SHFR
(354)

TRP 00 (013)
TRP 01 (014)
TRP 02 (129)
VECTOR ADRS IN DR; PS IN BR
t1 <BA←PCB>
t2 SHFR←TV
t3 BEND
t4 DR←SHFR
BR←PS
(354)

TRP 10 (354)
PCA GETS OLD PS; FETCH NEW PC FROM VECTOR
t1 BA←DR, BC←KERN DATI
t2 <SHFR←BR>
t3 BUST; GR[0]
t5 PCA←BR
(355)

SVC 00 13

ZAP 10 (372)
ABORT CAME FROM SERVICE FLOWS, FIX UP PC & PS, PCB GETS OLD PS; DR HAS ABORTED ADDR
t1 <BA←DR>
t2 <SHFR←PCB>
t4 PCB←PCA
(315)

ZAP 20 (315)
RESTORE OLD PC; BR GETS OLD PS
t1 <BA←DR>
t2 SHFR←PCB
t3 PCA←SR
t4 BR←SHFR
PCB←PCA
(302)

ZAP 30 (302)
RESTORE OLD PS
t1 <BA←DR>
t2 <SHFR←PCB>
t5 PS←BR
(352)

BRK 00 12

PS RESTORE

BRENO6 (352)
-PS RESTORE

BRK 00
BRK.01 (252)
WAIT FOR INTR IF BUS REQ ACTIVE & GET VECTOR
t1 <BA←PCB>
t2 SHFR←PCB
INTR PAUSE
t4 BR←BUS
SR←SHFR

BENI2 (130)
-CONF
CONF
CON 00 14 (170)

BRK 10 (130)
BRK.11 (253)
INTR VECTOR TO DR; SR HOLDS PC
t1 <BA←PCB>
t2 SHFR←BR
t4 DR←SHFR

BENI3 (100)

POWER UP [PF(1)]

PUP 00 (100)
START VECTOR ADRS TO DR
t1 <BA←PCB>
t2 SHFR←SV
t3 ACKN
t4 DR←SHFR
(355)
(352)

PUP 10 (341)
FETCH NEW PC FROM SV
t1 BA←DR; BC←DATI
t2 <SHFR←SV>
t3 BUST; GR[0]
(354)

PUP 20 (354)
GET NEW PC & STEP TO NEXT WORD OF VECTOR
t1 BA←DR; BC←DATI
t2 SHFR←DR+2
t4 BUS PAUSE
t6 SR←SHFR
BR←BUS
(340)

PUP 30 (340)
FETCH NEW PS; PC IN BR GOES TO PCB
t1 BA←SR; BC←DATI
t2 <SHFR←BR>
t3 BUST; GR[0]
t5 PCA←BR
t6 PCB←PCA
(341)

PUP 40 (341)
GET NEW PS FROM SV+2
t1 BA←SR; BC←DATI
t2 <SHFR←PCB>
t4 BUS PAUSE
t6 BR←BUS
(215)

RTI 50 2

INTERNAL TRAPS EXCEPT RED STACK ERRORS [PF(0)*TF*-SF]

BRK.80
BRK.80 (140)
GET TRAP VECTOR ADRS TO DR & PROCESSOR STATUS (PS) TO BR
t1 <BA←PCB>
t2 SHFR←TV
t4 BR←PS
DR←SHFR
(152)

INTERRUPTS; PASSIVE RELEASE & CONSOLE CONTINUE [PF(0)*-TF*-SF]

BRK.20 (120)
GET PROCESSOR STATUS TO BR; DR HAS INTERRUPT VECTOR
t1 <BA←PCB>
t2 <SHFR←DR>
t3 ACKN
t4 BR←PS

BEN02 (152)
(PWRF+INTRF)
-(PWRF+INTRF)

BRK.30 (152)
FETCH NEW PC FROM VECTOR; PCA GETS OLD PS; ADDR MAPPED TO KERNEL SPACE
t1 BA←DR; BC←KERN DATI
t2 <SHFR←BR>
t3 BUST; GR[0]
ACKN
t5 PCA←BR
(355)

SVC 00 13

RTI 60 2 (172)

RED STACK ERRORS [PF(0)*SF]

SER 00 (160)
EMERGENCY STACK LOCS 0 & 2 WILL HAVE OLD PC & OLD PS AFTER SERVICE
t1 <BA←PCB>
t2 SHFR←2
t4 SR←SHFR
(344)

SER 10 (344)
STACK POINTER SET TO 4 FOR EMERGENCY STACK PUSHES
t1 <BA←PCB>
t2 SHFR←SR+2
t5 GR[6]←SHFR
(140)

BRK 80 12

BREAK CONDITIONS

FIRST USED ON OPTION MODEL	QTY	DESCRIPTION	PART NO	ITEM NO
11/72	PARTS LIST			

UNLESS OTHERWISE SPECIFIED DIMENS ON IN INCHES TOLERANCES
DECIMALS: XXX ± .005; XX ± .02; X ± .1
ANGLES: ± 0 30
REMOVE BURRS AND BREAK SHARP CORNERS SURFACE QUALITY ✓
MATERIAL
FINISH

DRN
CHK'D — DATE 2/5/72
ENG — DATE 2-9-72
PROJ. ENGR — DATE 2-9-72
PROJ. — DATE

DIGITAL EQUIPMENT CORPORATION
MAYNARD MASSACHUSETTS

TITLE: KB11-C
FLOW DIAGRAMS (FLOWS 12)

NEXT HIGHER ASSY: B-CO-KB11 B
SIZE D | CODE FD | NUMBER KB11-C-1 | REV
SCALE
SHEET 3 OF 15
DIST

REV	DESCRIPTION	DATE	APPROVED

BRUNING 40 522 15840
USE FORM NO. DRD 102-B

34

This drawing and specifications, herein, are the property of Digital Equipment Corporation and shall not be reproduced or copied or used in whole or in part as the basis for the manufacture or sale of items without written permission COPYRIGHT © 1974

DIGITAL EQUIP. CORP.

SVC.00 (355)

GET NEW PC TO BR; STEP DR FOR VECTOR +2 FETCH; PCA HAS OLD PS

t1 BA←DR; BC←KERN DATI
t2 SNFR←DR+2
t4 BUS PAUSE
t6 BR←BUS
DR←SNFR

(065) (065)

SVC.10

FETCH NEW PS FROM VECTOR+2; ADDR MAPPED TO KERNEL SPACE; SP GETS OLD PC; PCB GETS OLD PS

t1 BA←DR; BC←KERN DATI
t2 SNFR←PCB
t3 BUST; GRC←0
t4 SP←SNFR
PCB←PCA

(357) (357)

SVC.20

GET NEW PS TO BR; DR GETS OLD PS; PCA← PCB GET NEW PC

t1 BA←DR; BC←KERN DATI
t2 SNFR←PCB
t4 BUS PAUSE
t5 PCA←BR
t6 BR←BUS
DR←SNFR
PCB←PCA

(360) (360)

SVC.30

PS GETS NEW PS; LOAD PREV MODE FROM CURRENT MODE; PC↔BR GET OLD PS; SP HAS OLD PC

t1 <BA←DR>; BC←KERN DATI
t2 SNFR←DR
t4 PS←BR; GRC←6
t5 PCA←DR
t6 BR←SNFR

(370) (370)

SVC.40

DR GETS NEW CURRENT MODE STACK POINTER; PCB HAS NEW PC; BR HAS OLD PS

t1 <BA←DR>
t2 <SNFR←PCB>
t4 DR←GD[6]

(037) (037)

SVC.50

STEP SP FOR PUSH; DR GETS SP-2; BR HAS OLD PS

t1 <BA←DR>
t2 SNFR←DR-2
t5 GRC←6←SNFR
t6 DR←SNFR

(025) (025)

SVC.60

PUSH OLD PS ONTO CURRENT MODE STACK; CHECK FOR STACK LIMIT; STEP SP FOR NEXT PUSH

t1 BA←DR; BC←DATO
t2 SNFR←DR-2
t3 BUST
t5 GRC←6←SNFR

(004)

SVC.70 /13

SVC.70 (004)

FINISH PUSH; BR GETS OLD PC; DR GETS SP

t1 BA←DR; BC←DATO
t2 SNFR←SP
t4 BUS PAUSE
t6 DR←GD[6]
BR←SNFR

(222)

SVC.80 (222)

DO PUSH ONTO STACK; CHECK FOR STACK LIMIT; IF INTR OR TRAP SERVICE: BR HAS OLD PC; PCB HAS NEW PC

t1 BA←DR; BC←DATO
t2 <SNFR←PCB>
t3 BUST; GRC←7

(300)

SVC.90 (300)

FINISH PUSH & STROBE BREAK REQUESTS

t1 BA←DR; BC←DATO
t2 <SNFR←BR>
t3 BRQ STROBE
t4 BUS PAUSE

(217)

FET00 /1

FSV.60 (327)

WAIT FOR FP OR INTERRUPT

t1 <BA←PCB>
<SNFR←DR>
BRQ STROBE

-(SYNC+BRQ) WAIT (327) BPC

FSV.72 (397)

SYNC+BRQ

FSV.00 (367)

START BUSOP

t1 BA←DR
BC←FC
FP READ DATA
t3 BUST; GRC←7
t4 BR←BUS

BENIO (362)

FPCLASS

FSV.30 (392)

DO BUSOP AND ENTER WAIT LOOP

t1 BA←DR BC←FC
t5 BUS PAUSE
t6 BR←BUS

(225)

FSV.40 (225)

WAIT FOR FPU TO MODIFY DATA

t1 <BA←[illegible]>
<SNFR←BR>

BENIO (225)

-SYNC

FSV.50 (265)

START NEXT CYCLE

BA←DR BC←FC
FP READ DATA
t4 BUST; GRC←0
t6 BR←BUS

(362)

-FPCLASS

FSV.12 (362)

FINISH BUSOP ENABLE FP ATTN

t1 BA←DR
BC←FC
SNFR←DR+2
BUS PAUSE
t6 FP ATTN
t7 BR←BUS
DR←SNFR

BENIO (327) FP REQ

-FP REQ

FSV.20 (327)

SET FPCS IE IF NEEDED

t1 READ FPS
t2 FPC STROBE
t6 BR←BUS

(237)

FET.77 (237)

START NEXT FETCH

t5 PCB←PCS FPC←SNFR
SNFR←FP-SR
t3 BUST; CLR FLAGS
t6 IR←SNFR
PC←PCC IF ENABLE

BENIO (245)

BRQ

ARK.77 (245)

-BRQ

FET.77 (265)

FSV.72 (397)

READ BACK OLD BR

t1 READ FDR
<BA←PCB>
t4 BR←BUS

(155)

FSV.80 (155)

READ BACK OLD PC

t1 READ FPA
GRC[7]←SNFR
SNFR←BR
t6 BR←BUS

(245)

FSV.90 (245)

RESTORE PCB

t1 PC←BR
t4 PCB←PCA
<SNFR←BR>

(352)

BPCCB (352)

SERVICE SEQUENCE

FIRST USED ON OPTION/MODEL	QTY	DESCRIPTION	PART NO.	ITEM NO.
11/70		PARTS LIST		

UNLESS OTHERWISE SPECIFIED DIMENSION IN INCHES TOLERANCES

DECIMALS	ANGLES
XXX ± .005	± 0° 30'
XX ± .02	
X ± .1	

REMOVE BURRS AND BREAK SHARP CORNERS SURFACE QUALITY ✓

MATERIAL —

FINISH —

		DATE
DWN	[illegible]	[illegible]
CHK	[illegible]	[illegible]
ENG	[illegible]	[illegible]
M.E.	[illegible]	[illegible]
M.G.	[illegible]	[illegible]

NEXT HIGHER ASSY: B-DD-KB11-B

SCALE —

SHEET 14 OF 15

EQUIPMENT CORPORATION
MAYNARD MASSACHUSETTS

TITLE: KB11-C FLOW DIAGRAMS (FLOWS 13)

SIZE D | CODE FD | NUMBER KB11-C-1 | REV.

DWT

REVISIONS

REV	CHANGE NO	CHK

BRUNING 40-522 15840

DEC-11-DRM-NO ORD 102-B

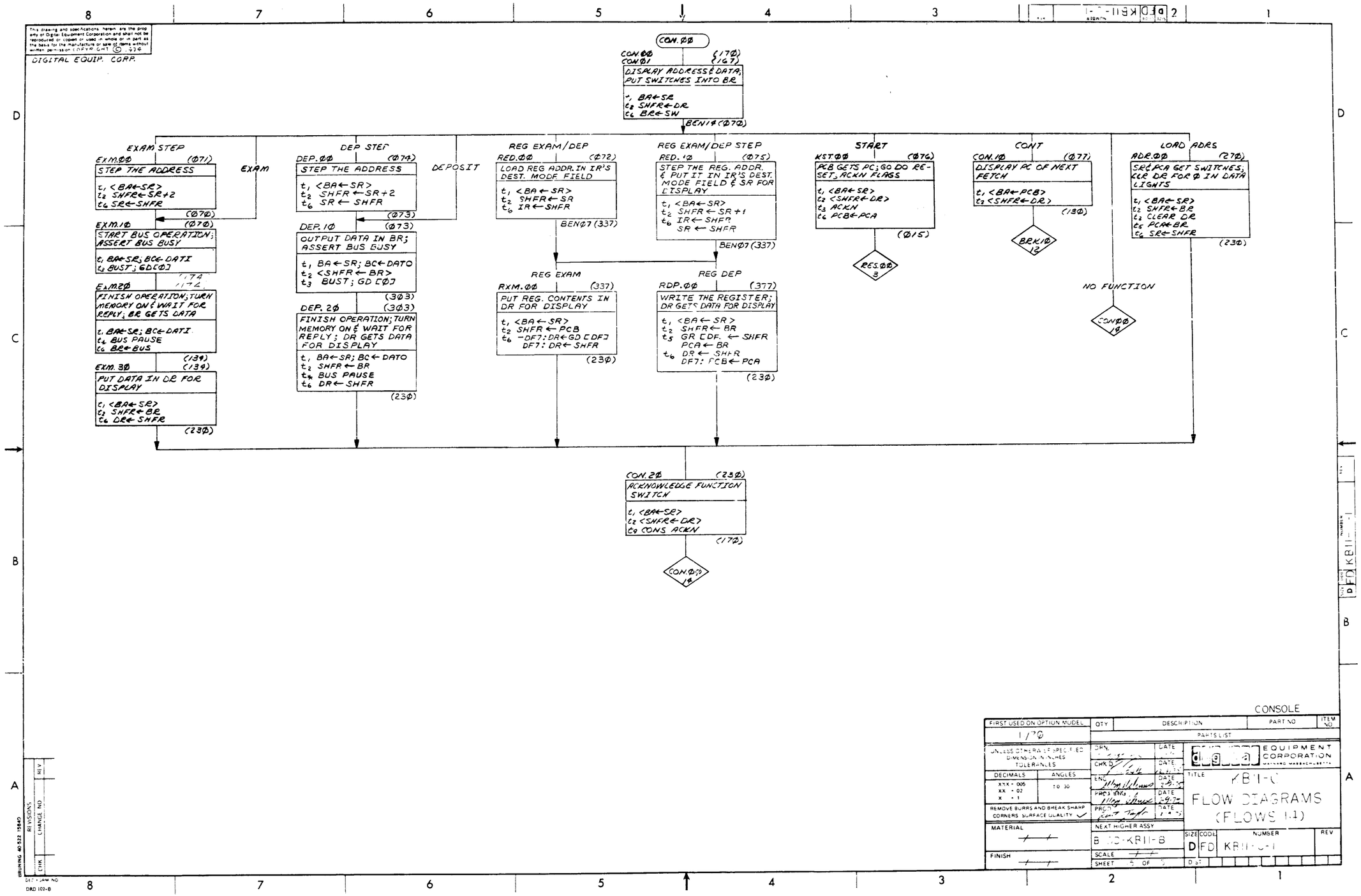

This drawing and specifications, herein, are the property of Digital Equipment Corporation and shall not be reproduced or copied or used in whole or in part as the basis for the manufacture or sale of items without written permission. COPYRIGHT © 1974
DIGITAL EQUIP. CORP.
CON.ØØ
CON.ØØ (17Ø)
CON.Ø1 (167)
DISPLAY ADDRESS & DATA; PUT SWITCHES INTO BR
t1 BA←SR
t2 SHFR←DR
t6 BR←SW
BEN14 (Ø7Ø)
EXAM STEP
EXAM
DEP STEP
DEPOSIT
REG EXAM/DEP
REG EXAM/DEP STEP
START
CONT
LOAD ADRS
EXM.ØØ (Ø71)
STEP THE ADDRESS
t1 <BA←SR>
t2 SHFR←SR+2
t6 SR←SHFR
(Ø7Ø)
EXM.1Ø (Ø7Ø)
START BUS OPERATION; ASSERT BUS BUSY
t1 BA←SR; BC←DATI
t3 BUST; GD[Ø]
EXM.2Ø
FINISH OPERATION; TURN MEMORY ON & WAIT FOR REPLY; BR GETS DATA
t1 BA←SR; BC←DATI
t4 BUS PAUSE
t6 BR←BUS
(134)
EXM.3Ø (134)
PUT DATA IN DR FOR DISPLAY
t1 <BA←SR>
t2 SHFR←BR
t6 DR←SHFR
(23Ø)
DEP.ØØ (Ø74)
STEP THE ADDRESS
t1 <BA←SR>
t2 SHFR←SR+2
t6 SR←SHFR
(Ø73)
DEP.1Ø (Ø73)
OUTPUT DATA IN BR; ASSERT BUS BUSY
t1 BA←SR; BC←DATO
t2 <SHFR←BR>
t3 BUST; GD[Ø]
(3Ø3)
DEP.2Ø (3Ø3)
FINISH OPERATION; TURN MEMORY ON & WAIT FOR REPLY; DR GETS DATA FOR DISPLAY
t1 BA←SR; BC←DATO
t2 SHFR←BR
t4 BUS PAUSE
t6 DR←SHFR
(23Ø)
RED.ØØ (Ø72)
LOAD REG ADDR. IN IR'S DEST. MODE FIELD
t1 <BA←SR>
t2 SHFR←SR
t6 IR←SHFR
BENØ7 (337)
RED.1Ø (Ø75)
STEP THE REG. ADDR. & PUT IT IN IR'S DEST. MODE FIELD & SR FOR DISPLAY
t1 <BA←SR>
t2 SHFR←SR+1
t6 IR←SHFR
SR←SHFR
BENØ7 (337)
KST.ØØ (Ø76)
PCB GETS PC; GO DO RESET, ACKN FLAGS
t1 <BA←SR>
t2 <SHFR←DR>
t3 ACKN
t6 PCB←PCA
(Ø15)
RES.ØØ 3
CON.1Ø (Ø77)
DISPLAY PC OF NEXT FETCH
t1 <BA←PCB>
t2 <SHFR←DR>
(13Ø)
BRK1Ø 12
ADR.ØØ (27Ø)
SR & PCA GET SWITCHES, CLR DR FOR Ø IN DATA LIGHTS
t1 <BA←SR>
t2 SHFR←BR
t3 CLEAR DR
t5 PCA←BR
t6 SR←SHFR
(23Ø)
NO FUNCTION
CONØØ 14
REG EXAM
RXM.ØØ (337)
PUT REG. CONTENTS IN DR FOR DISPLAY
t1 <BA←SR>
t2 SHFR←PCB
t6 -DF7: DR←GD[DF]
DF7: DR←SHFR
(23Ø)
REG DEP
RDP.ØØ (377)
WRITE THE REGISTER; DR GETS DATA FOR DISPLAY
t1 <BA←SR>
t2 SHFR←BR
t5 GR[DF]←SHFR
PCA←BR
t6 DR←SHFR
DF7: PCB←PCA
(23Ø)
CON.2Ø (23Ø)
ACKNOWLEDGE FUNCTION SWITCH
t1 <BA←SR>
t2 <SHFR←DR>
t9 CONS ACKN
(17Ø)
CON.ØØ 14
CONSOLE
FIRST USED ON OPTION MODEL
1/7Ø
QTY
DESCRIPTION
PART NO
ITEM NO
PARTS LIST
UNLESS OTHERWISE SPECIFIED DIMENSION IN INCHES TOLERANCES
DECIMALS
ANGLES
XXX ± .005
XX ± .02
X ± .1
±0 30
REMOVE BURRS AND BREAK SHARP CORNERS SURFACE QUALITY
MATERIAL
FINISH
DRN
CHK'D
ENG
PROJ ENG
PROD
DATE
NEXT HIGHER ASSY
B-CD-KB11-B
SCALE
SHEET 5 OF 5
EQUIPMENT CORPORATION
MAYNARD MASSACHUSETTS
TITLE
KB11-C
FLOW DIAGRAMS
(FLOWS 14)
SIZE
D
CODE
FD
NUMBER
KB11-C-1
REV
DIST
REVISIONS
CHANGE NO
REV
CHK
BRUNING 40 522 15840
DRD 102-B

36

This drawing and specifications, herein, are the property of Digital Equipment Corporation and shall not be reproduced or copied or used in whole or in part as the basis for the manufacture or sale of items without written permission.

NOTES:
1. UNLESS OTHERWISE NOTED RESISTANCE IS IN Ω AND CAPACITANCE IS IN PICOFARADS. CAPS WITHOUT VALUE NOTED ARE .01 MFD.
2. E7, E10, E26 & E79 ARE SPARE IC LOCATIONS
3. R1, R3 & R15 ARE NOT USED
4. SET-UP POWER — UP VECTOR — JUMPERS IN ACCORDANCE WITH TABLES ON PAGE 2 OF THIS PRINT.

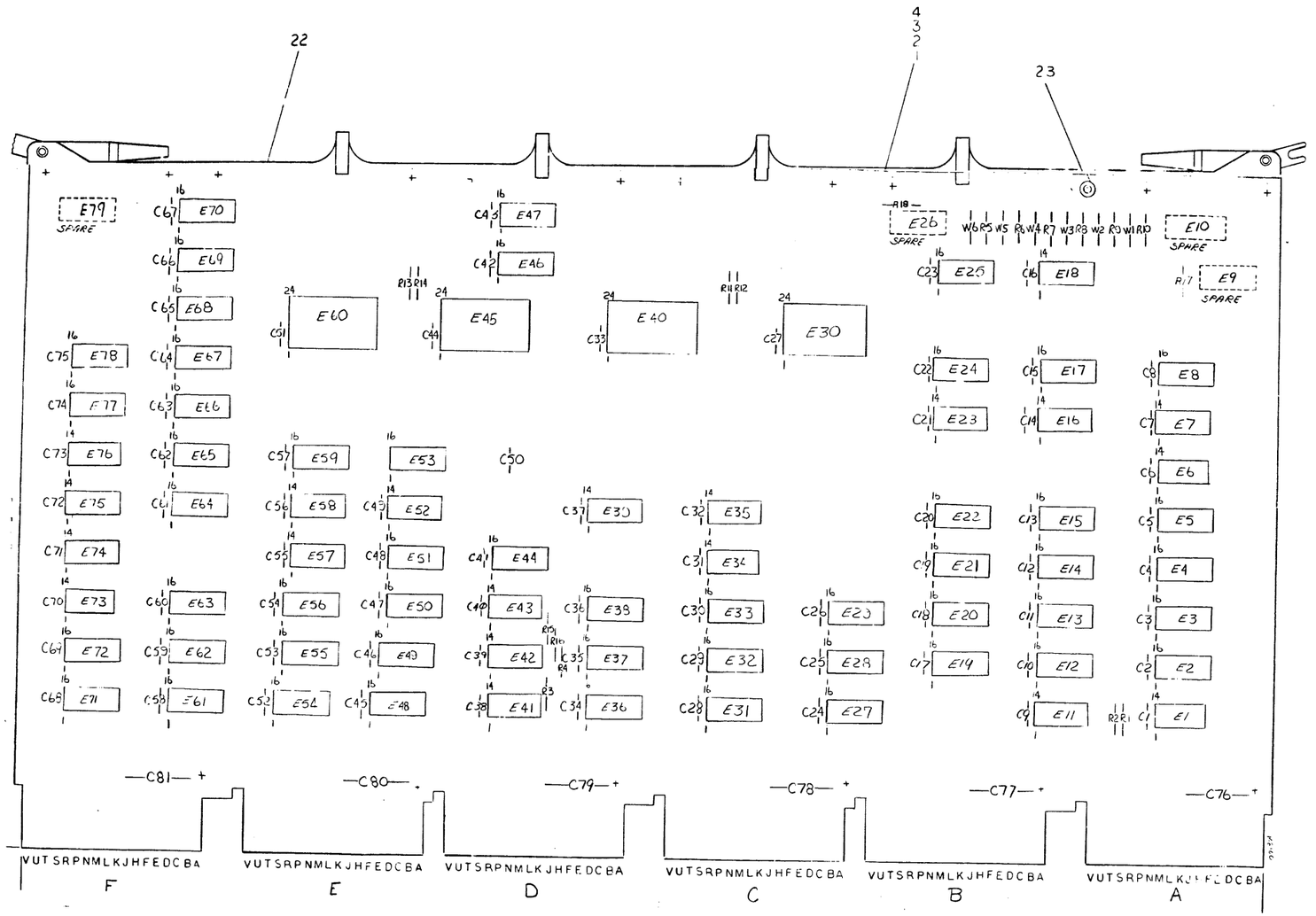

QTY	REF DESIGNATION	DESCRIPTION	PART NO	ITEM NO
12		EYELET	7506732	33
1		HANDLE, MODULE	EK5-21077-2	32
1	E44	IC DEC 74182-1	1410351	31
9	E6,12,E19,E26,E27, E36,E47,E69,E70	IC DEC 7427-74	1410350	30
2	E43,E49	IC DEC 74S157	1410568	29
39	E1,E4,E5,E8,E13,E14, E15,E17,E20,E21,E22, E24,E25,E31,E33,E34, E35,E37,E52,E53,E54,E55, E56,E57,E58,E59,E60, E61,E62,E63,E64,E65, E66,E67,E68,E71,E72, E73,E74,E75,E76,E77, E78	IC DEC, 74S153	1410547	5
1	E22	IC DEC, 74S20	1410534	17
4	E7,E7,E21,E38	IC DEC, 74S11	1410527	16
2	E16,E24	IC DEC, 74S10	1410536	15
3	E9,E11,E18,E41,E51, E58,E63	IC DEC, 74S04	1410528	14
3	E23,E35,E74	IC DEC, 74S00	1410526	13
4	E30,E42,E45,E60	IC DEC, 74S181	1410531	12
2	E1,E42	IC DIC 74S02	1410542	11
2	R16,R14	RES., 5GΩ, 1/4W, 5%	1301840	10
3	R2,R4,R6	RES., 15Ω, 1/4W, 5%	1210250	9
2	R11,R13	RES., 332Ω, 1/4W, 5%	1300117	8
9	R5,R7,R8,R9,R10,R12	RES. 10K, 1/4W, 5%	1301479	7
6	C16 THRU C81	CAP, 6.8μF, 35V, 20%	1000067	6
75	C1 THRU C75	CAP. .01MF, 100V, 20%	1001610	5
1		ERMES SPEC. T BOARD	5008586	4
REF		MODULE ECO HISTORY	E-MM-M8100-0-6	3
REF		ASSY/WIRING HOLE LAYOUT	E-MM-M8100-0-5	2
REF		X-Y COORDINATE HOLE LOCATION	E-CO-M8100-0-4	1

PARTS LIST

ETCH BOARD REV C

IC TYPE	GND	+5V
DEC 74182-1	8	16
DEC 7427-74	8	16
DEC 74S157	8	16
DEC 74S153	8	16
DEC 74S181	12	24

GND AND 5V ARE USUALLY PIN 7 AND 14 RESPECTIVELY. EXCEPTIONS ARE STATED ABOVE

IC PIN LOCATIONS

ITEM NO.	AWG	FROM PT	TO PT

JUMPER LIST

DEC NO.	EIA NO.	DEC NO.	EIA NO.

SEMICONDUCTOR CONVERSION CHART

REV	CHANGE NO	REVISIONS
A	M8100-0001A	K. BOLEN 27-JUL-72
B	M8100-0002	S. JENKINS 4-SEP-72
C	M8100-0003	S. JENKINS 7-SEP-72
D	M8100-0004	K. BOLEN 21-SEP-72

DRN L. Hart DATE
CHK'D T. Cc DATE
ENG B. Ford DATE
DIR M. Ford DATE
PROJ Tom L DATE

NEXT HIGHER ASSY
P-LU-KB11-A

SCALE C
SHEET 1 OF 3

EQUIPMENT CORPORATION
MAYNARD, MASSACHUSETTS

TITLE
DAP-DATA PATHS

SIZE E | CODE | NUMBER M8100-0-1 | REV C
DIST

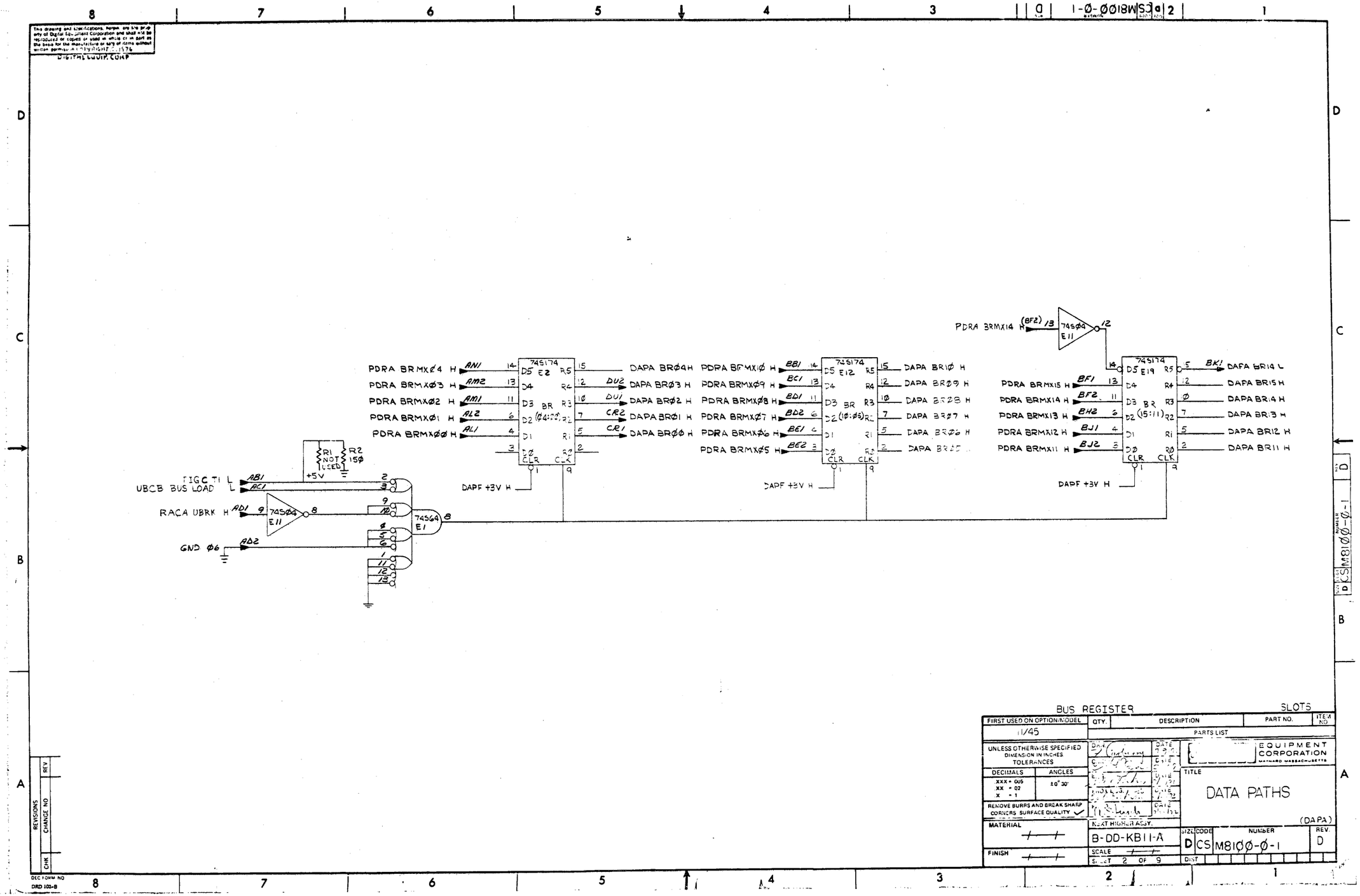

BUS REGISTER SLOTS

FIRST USED ON OPTION/MODEL	QTY.	DESCRIPTION	PART NO.	ITEM NO.
11/45		PARTS LIST		

UNLESS OTHERWISE SPECIFIED DIMENSION IN INCHES TOLERANCES

DECIMALS	ANGLES
.XXX ± .005	±0° 30'
.XX ± .02	
.X ± .1	

REMOVE BURRS AND BREAK SHARP CORNERS SURFACE QUALITY ✓

MATERIAL

FINISH

NEXT HIGHER ASSY. B-DD-KB11-A

SCALE

SHEET 2 OF 9

EQUIPMENT CORPORATION MAYNARD MASSACHUSETTS

TITLE DATA PATHS (DAPA)

SIZE	CODE	NUMBER	REV.
D	CS	M81ØØ-Ø-1	D

DIST

REVISIONS CHANGE NO REV CHK

DEC FORM NO DRD 102-B

38

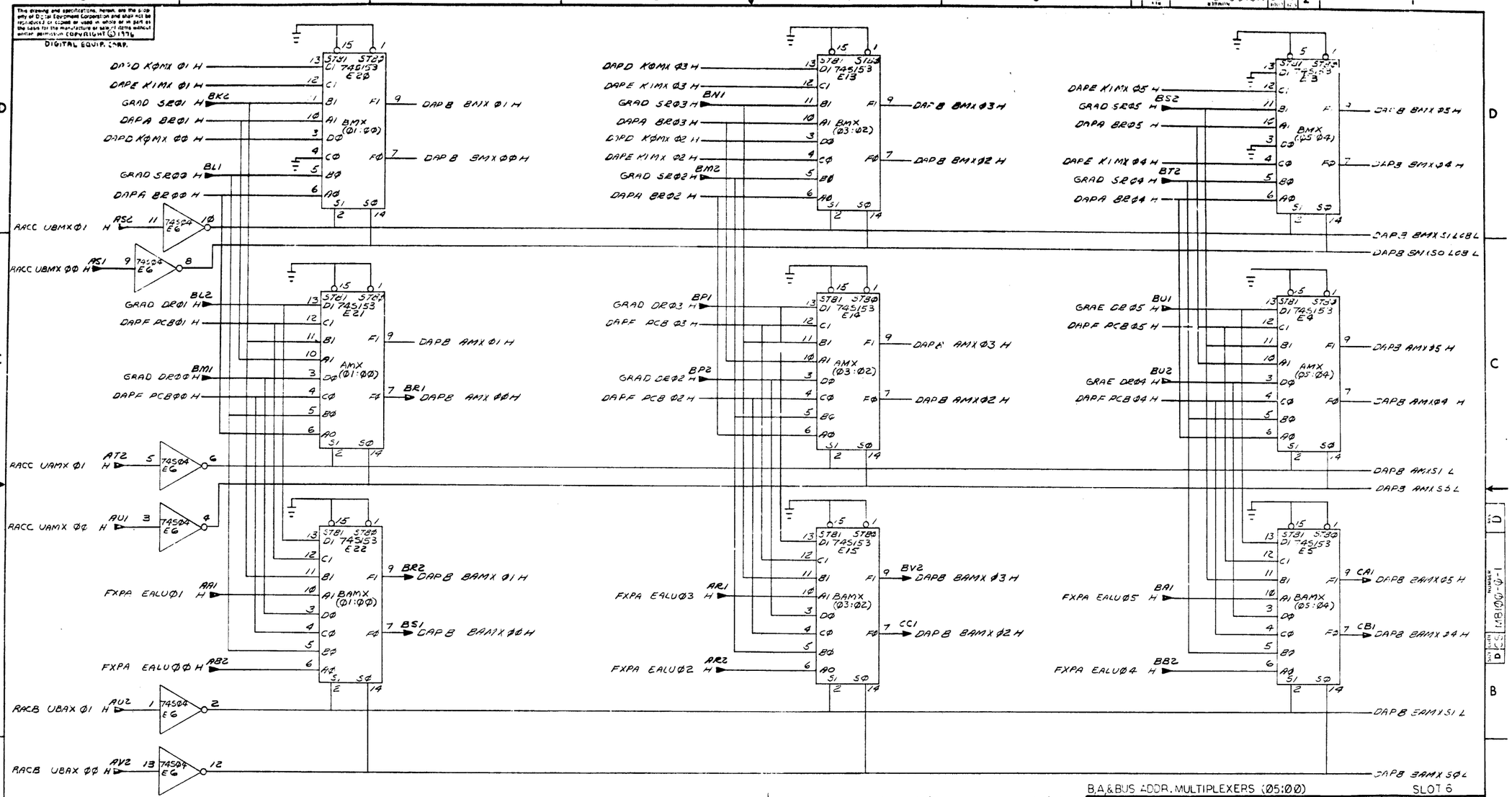

UBAX Ø1	ØØ
L	L DR
L	H PCB
H	L SR
H	H FP MAINT

UAMX Ø1	ØØ
L	L DR
L	H PCB
H	L SR
H	H BR

UBMX Ø1	ØØ
L	L KØMX
L	H K1MX
H	L SR
H	H BR

B,A,& BUS ADDR. MULTIPLEXERS (Ø5:ØØ) SLOT 6

FIRST USED ON OPTION/MODEL: 11/45

QTY. | DESCRIPTION | PART NO. | ITEM NO.

PARTS LIST

UNLESS OTHERWISE SPECIFIED DIMENSION IN INCHES. TOLERANCES

DECIMALS	ANGLES
.XXX = .005	±0° 30'
.XX = .02	
.X = .1	

REMOVE BURRS AND BREAK SHARP CORNERS. SURFACE QUALITY ✓

MATERIAL

FINISH

DRN: [signature] DATE 7-9-71

EQUIPMENT CORPORATION MAYNARD MASSACHUSETTS

TITLE: DATA PATHS

(DAPB)

NEXT HIGHER ASSY. B-DD-KB11-A

SCALE

SHEET 3 OF 9

SIZE D | CODE CS | NUMBER M81ØØ-Ø-1 | REV. D

DIST.

REVISIONS | CHANGE NO. | REV | CHK

DEC FORM NO. DRD 102-B

This drawing and specifications, herein, are the property of Digital Equipment Corporation and shall not be reproduced or copied or used in whole or in part as the basis for the manufacture or sale of items without written permission. COPYRIGHT © 1976
DIGITAL EQUIP. CORP.

STBI STBØ
DI 745153 E27 F1 → 9 CF1 → DAPC BMXØ7 H
BMX (Ø7:Ø6)
DAPE KIMXØ7 H
GRAF SRØ7 H CD1
DAPA BRØ7 H
DAPE KIMXØ6 H
GRAF SRØ6 H CD2
DAPA BRØ6 H
FØ → 7 → DAPC BMXØ6 H
SI SØ
DAPB BMXS1 LOB L
DAPB BMXSØ LOB L

STBI STBØ
DI 745153 E28 F1 → 9 CK1 → DAPC AMXØ7 H
AMX (Ø7:Ø6)
GRAE DRØ7 H CE1
DAPH PCBØ7 H
GRAE DRØ6 H CE2
DAPH PCBØ6 H
FØ → 7 → DAPC AMXØ6 H
SI SØ
DAPB AMXS1 L
DAPB AMXSØ L

STBI STBØ
DI 745153 E29 F1 → 9 CK2 → DAPC BAMXØ7 H
BAMX (Ø7:Ø6)
FXPA EALUØ7 H CB2
FXPA EALUØ6 H DB1
FØ → 7 → CL1 → DAPC BAMXØ6 H
SI SØ
DAPB BAMXS1 L
DAPB BAMXSØ L

STBI STBØ
DI 745153 E31 F1 → 9 → DAPC BMXØ9 H
BMX (Ø9:Ø8)
DAPD KØEX H
DAPE KIEX H
GRAF SRØ9 H CF2
DAPA BRØ9 H
GRAF SRØ8 H CH2
DAPA BRØ8 H
FØ → 7 → DAPC BMXØ8 H
SI SØ
DAPD BMXS1 HIB L
DAPD BMXSØ HIB L

STBI STBØ
DI 745153 E32 F1 → 9 → DAPC AMXØ9 H
AMX (Ø9:Ø8)
GRAF DRØ9 H CJ1
DAPH PCBØ9 H
GRAF DRØ8 H CJ2
DAPH PCBØ8 H
FØ → 7 → DAPC AMXØ8 H
SI SØ

STBI STBØ
DI 745153 E33 F1 → 9 CP1 → DAPC BAMXØ9 H
BAMX (Ø9:Ø8)
FXPB EALUØ9 H DB2
FXPB EALUØ8 H EK2
FØ → 7 → CP2 → DAPC BAMXØ8 H
SI SØ
DAPB BAMXS1 L
DAPB BAMXSØ L

74S09 E76
DAPE KIEX H
RACC UKMXØØ H (EPØ)
74S11 E75
STBI STBØ
DI 745153 E36 F1 → 9 → DAPC BMX11 H
BMX (11:1Ø)
GRAF SR11 H CL2
DAPA BR11 H
DAPD KØEX H
DAPE KIEX H
GRAF SR1Ø H CM1
DAPA BR1Ø H
FØ → 7 → DAPC BMX1Ø H
SI SØ

STBI STBØ
DI 745153 E37 F1 → 9 → DAPC AMX11 H
AMX (11:1Ø)
GRAF DR11 H CM2
DAPH PCB11 H
GRAF DR1Ø H CN1
DAPH PCB1Ø H
FØ → 7 → DAPC AMX1Ø H
SI SØ

STBI STBØ
DI 745153 E38 F1 → 9 CS1 → DAPC BAMX11 H
BAMX (11:1Ø)
FXPB EALU11 H EL1
FXPB EALUIØ H FA1
FØ → 7 → CS2 → DAPC BAMX1Ø H
SI SØ

B, A, & BUS ADDR. MULTIPLEXERS (11:Ø7) SLOTS

FIRST USED ON ASSEMBLY	QTY.	DESCRIPTION	PART NO.	ITEM
11/45		PARTS LIST		

UNLESS OTHERWISE SPECIFIED DIMENSIONS ARE IN INCHES
TOLERANCES
DECIMALS: XXX ± .005, XX ± .02, X ± .1
ANGLES: ± 0° 30'
REMOVE BURRS AND BREAK SHARP CORNERS. SURFACE QUALITY ✓
MATERIAL —//—
FINISH —//—

DRAWN 7/75 | CHECKED | ENGR | PROJ. | NEXT HIGHER ASSY. B-DD-KB11-A | SCALE —//— | SHEET 4 OF 9

EQUIPMENT CORPORATION MAYNARD MASSACHUSETTS

TITLE: DATA PATHS (DAP C)

SIZE D | CODE CS | NUMBER M8100-0-1 | REV D | DIST

REVISIONS | REV | CHANGE NO | CHK

DEC FORM NO DB-102-B

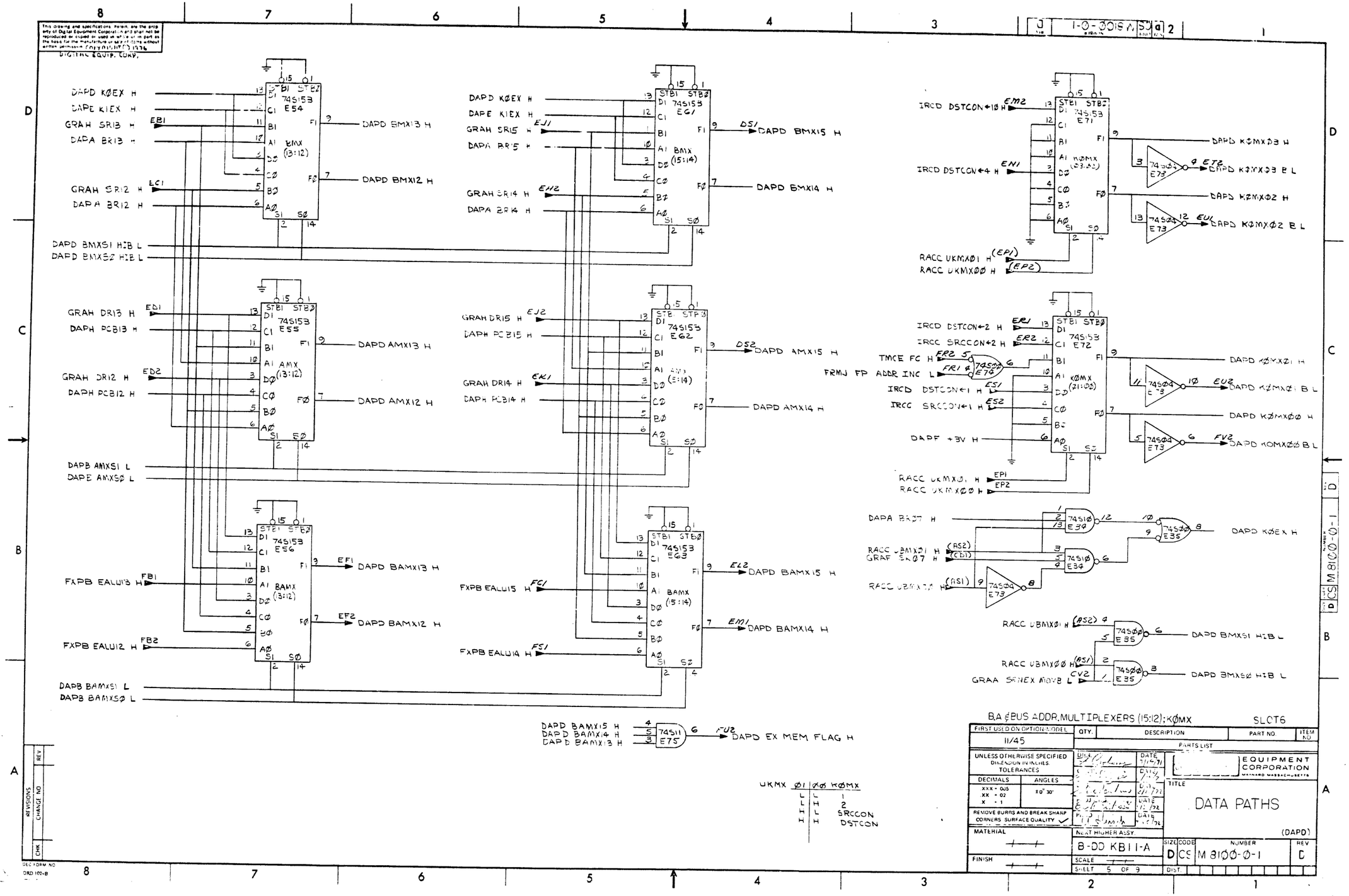

DAPD KØEX H
DAPE KIEX H
GRAH SRI3 H
DAPA BRI3 H
GRAH SRI2 H
DAPA BRI2 H
DAPD BMXS1 HIB L
DAPD BMXSØ HIB L
74S153 E54 BMX (13:12)
DAPD BMX13 H
DAPD BMX12 H
74S153 E61 BMX (15:14)
DAPD BMX15 H
DAPD BMX14 H
GRAH DRI3 H
DAPH PCBI3 H
GRAH DRI2 H
DAPH PCBI2 H
74S153 E55 AMX (13:12)
DAPD AMX13 H
DAPD AMX12 H
GRAH DRI5 H
DAPH PCBI5 H
GRAH DRI4 H
DAPH PCBI4 H
74S153 E62 AMX (15:14)
DAPD AMX15 H
DAPD AMX14 H
DAPB AMXS1 L
DAPE AMXSØ L
74S153 E56 BAMX (13:12)
FXPB EALU13 H
FXPB EALU12 H
DAPD BAMX13 H
DAPD BAMX12 H
74S153 E63 BAMX (15:14)
FXPB EALU15 H
FXPB EALU14 H
DAPD BAMX15 H
DAPD BAMX14 H
DAPB BAMXS1 L
DAPB BAMXSØ L
74S11 E75
DAPD EX MEM FLAG H
74S153 E71 KØMX (Ø3:Ø2)
IRCD DSTCON←1Ø H
IRCD DSTCON←4 H
RACC UKMXØ1 H
RACC UKMXØØ H
DAPD KØMXØ3 H
DAPD KØMXØ3 B L
DAPD KØMXØ2 H
DAPD KØMXØ2 B L
74S153 E72 KØMX (Ø1:ØØ)
IRCD DSTCON←2 H
IRCC SRCCON←2 H
TMCE FC H
FRMJ FP ADDR INC L
IRCD DSTCON←1 H
IRCC SRCCON←1 H
DAPF +3V H
DAPD KØMXØ1 H
DAPD KØMXØ1 B L
DAPD KØMXØØ H
DAPD KOMXØØ B L
DAPA BRØ7 H
RACC UBMXØ1 H
GRAF SRØ7 H
RACC UBMXØØ H
DAPD KØEX H
RACC UBMXØ1 H
RACC UBMXØØ H
GRAA SRNEX MOVB L
DAPD BMXS1 HIB L
DAPD BMXSØ HIB L
UKMX Ø1 ØØ KØMX
L L 1
L H 2
H L SRCCON
H H DSTCON
B,A & BUS ADDR. MULTIPLEXERS (15:12); KØMX
SLOT6
FIRST USED ON OPTION MODEL
11/45
QTY. DESCRIPTION PART NO. ITEM NO
PARTS LIST
UNLESS OTHERWISE SPECIFIED DIMENSION IN INCHES. TOLERANCES
DECIMALS ANGLES
REMOVE BURRS AND BREAK SHARP CORNERS SURFACE QUALITY
MATERIAL
FINISH
NEXT HIGHER ASSY.
B-DD KB11-A
SCALE
SHEET 5 OF 9
EQUIPMENT CORPORATION
MAYNARD MASSACHUSETTS
TITLE
DATA PATHS
(DAPD)
SIZE D CODE CS NUMBER M 8100-0-1 REV D
DIST.
REVISIONS
CHANGE NO
REV
CHK
DEC FORM NO
DRD 102-B

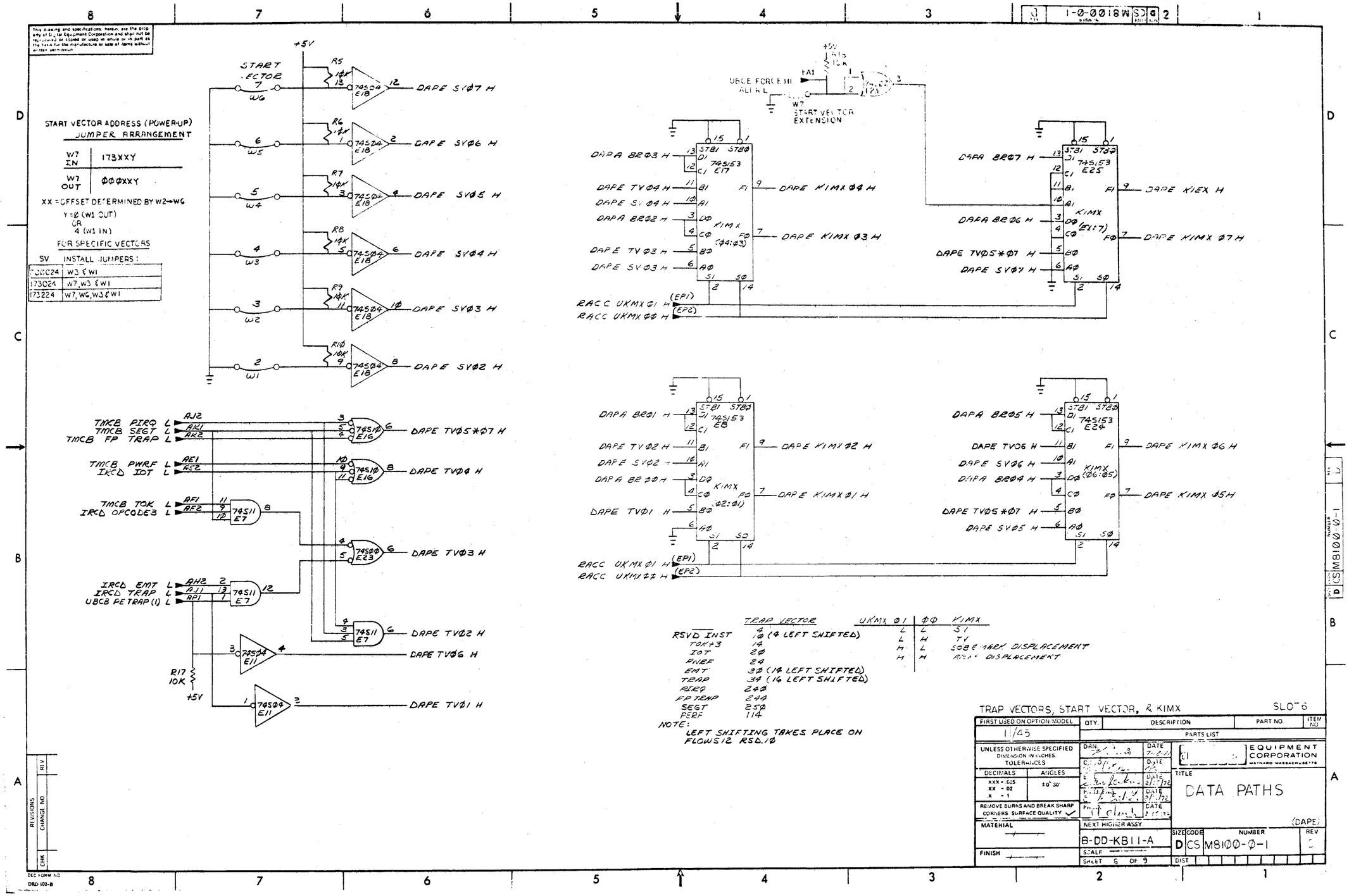
START VECTOR ADDRESS (POWER-UP)
JUMPER ARRANGEMENT
W7 IN 173XXY
W7 OUT ØØØXXY
XX = OFFSET DETERMINED BY W2→W6
Y = Ø (W1 OUT)
OR
4 (W1 IN)
FOR SPECIFIC VECTORS
SV INSTALL JUMPERS:
173024 W3 & W1
173024 W7, W3 & W1
173224 W7, W6, W3 & W1
START VECTOR
W7 START VECTOR EXTENSION
DAPE SVØ7 H
DAPE SVØ6 H
DAPE SVØ5 H
DAPE SVØ4 H
DAPE SVØ3 H
DAPE SVØ2 H
DAPE TVØ5*Ø7 H
DAPE TVØ4 H
DAPE TVØ3 H
DAPE TVØ2 H
DAPE TVØ6 H
DAPE TVØ1 H
DAPA BRØ3 H
DAPE TVØ4 H
DAPE SVØ4 H
DAPA BRØ2 H
DAPE TVØ3 H
DAPE SVØ3 H
DAPE KIMXØ4 H
DAPE KIMXØ3 H
DAPA BRØ7 H
DAPA BRØ6 H
DAPE TVØ5*Ø7 H
DAPE SVØ7 H
DAPE KIEX H
DAPE KIMXØ7 H
RACC UKMXØ1 H (EP1)
RACC UKMXØØ H (EP2)
DAPA BRØ1 H
DAPE TVØ2 H
DAPE SVØ2 H
DAPA BRØØ H
DAPE TVØ1 H
DAPE KIMXØ2 H
DAPE KIMXØ1 H
DAPA BRØ5 H
DAPE TVØ6 H
DAPE SVØ6 H
DAPA BRØ4 H
DAPE TVØ5*Ø7 H
DAPE SVØ5 H
DAPE KIMXØ6 H
DAPE KIMXØ5 H
TMCB PIRQ L
TMCB SEGT L
TMCB FP TRAP L
TMCB PWRF L
IRCD IOT L
TMCB TOK L
IRCD OPCODE3 L
IRCD EMT L
IRCD TRAP L
UBCB PETRAP (1) L
R17 10K
+5V
TRAP VECTOR
RSVD INST 4
TOK+3 10 (4 LEFT SHIFTED)
IOT 14
PWRF 20
EMT 30 (14 LEFT SHIFTED)
TRAP 34 (16 LEFT SHIFTED)
PIRQ 240
FP TRAP 244
SEGT 250
PERF 114
NOTE:
LEFT SHIFTING TAKES PLACE ON FLOWS 12 RSD.10
UKMX Ø1 | ØØ | KIMX
L | L | SV
L | H | TV
H | L | SOBEMARK DISPLACEMENT
H | H | ARM DISPLACEMENT
TRAP VECTORS, START VECTOR, & KIMX
SLOT 6
FIRST USED ON OPTION MODEL 11/45
QTY. DESCRIPTION PART NO. ITEM NO.
PARTS LIST
UNLESS OTHERWISE SPECIFIED DIMENSION IN INCHES TOLERANCES
DECIMALS XXX = .005 XX = .02 X = 1
ANGLES ±0° 30'
REMOVE BURRS AND BREAK SHARP CORNERS SURFACE QUALITY
MATERIAL
FINISH
NEXT HIGHER ASSY. B-DD-KB11-A
SCALE
SHEET 6 OF 9
EQUIPMENT CORPORATION MAYNARD MASSACHUSETTS
TITLE DATA PATHS
(DAPE)
SIZE D CODE CS NUMBER M8100-Ø-1 REV
DIST
REVISIONS
CHANGE NO
REV
CHK
DEC FORM NO DRD 102-B

42

This drawing and specifications, herein, are the property of Digital Equipment Corporation and shall not be reproduced or copied or used in whole or in part as the basis for the manufacture or sale of items without written permission. COPYRIGHT © 1971
DIGITAL EQUIP. CORP.

DAPF COUT∅3 L
COUT∅3 = GG*(P∅+CIN)

74182-1 E44 CARRY

GRAA ALUC H — FD1 — 74S04 E76

DAPB BMX∅3 H
DAPB AMX∅3 H
DAPB BMX∅2 H
DAPB AMX∅2 H
DAPB BMX∅1 H
DAPB AMX∅1 H
DAPB BMX∅∅ H
DAPB AMX∅∅ H

745181 E3∅ ALU (∅3:∅∅)

DAPF ALU∅4 H
DAPF PCB∅3 H
DAPH ALU11 H
DAPF PCB∅2 H
DAPH ALU1∅ H

745153 LG4 SHFR (∅3:∅2)

BUS A=B(15:8) H — FK1 — DAPF SHFR∅3 H
FK2 — DAPF SHFR∅2 H

DAPF PCB∅1 H
DAPH ALU∅9 H
DAPF PCB∅∅ H
DAPH ALU∅8 H

745153 E65 SHFR (∅1:∅∅)

FL1 — DAPF SHFR∅1 H
FL2 — DAPF SHR∅∅ H

+5V — R11 330Ω — R12 560Ω
DAPF +3V A H
74S11 E57 — FM2 — DAPF A=B(7:∅)H
74S∅∅ E74 — FM1 — DAPF A=B(15:∅) L

GRAA SHFRS1 L — FD2 — 74S04 E76
GRAA SHFRS∅ L — FE1 — 74S04 E76
GRAA ALLM L — FE2 — 74S04 E39
GRAA ALUS∅ L — FF1 — 74S04 E39
GRAA ALUS1 L — FF2 — 74S04 E39
GRAA ALUS2 L — FH2 — 74S04 E39
GRAA ALUS3 L — FJ1 — 74S04 E39

DAPF LM H
DAPF LS∅ H
DAPF LS1 H
DAPF LS2 H
DAPF LS3 H

DAPF ALU∅3 H
DAPF ALU∅2 H
DAPF ALU∅1 H
FJ2 — DAPF ALU∅∅ H

DAPF ALU∅5 H
DAPF ALU∅4 H
DAPF +3V H
DAPJ CLKPCA H

74S174 E67 PCA (∅5:∅∅)

74S174 E66 PCB (∅5:∅∅)

DAPF PCB∅5 H
DAPF PCB∅4 H
DAPF PCB∅3 H
DAPF PCB∅2 H
DAPF PCB∅1 H
DAPF PCB∅∅ H
DAPJ CLKPCB H

SHFR S1 S∅ H
L L SWAB (OB SWAP)
L H PCB
H L ALU
H H RT. SHIFT ALU

DAPF COUT∅7 L
COUT∅7 = G1*(P1+G∅*P∅+CIN∅)

74182-1 E44 CARRY

745181 E4∅ ALU (∅7:∅4)

DAPC BMX∅7 H
DAPC AMX∅7 H
DAPC BMX∅6 H
DAPC AMX∅6 H
DAPB BMX∅5 H
DAPB AMX∅5 H
DAPB BMX∅4 H
DAPB AMX∅4 H

DAPF LS3 H
DAPF LS2 H
DAPF LS1 H
DAPF LS∅ H
DAPF LM H
DAPF COUT∅3 _

74S37 E68 — DAPF +3V A H

745153 E68 SHFR (∅7:∅6)

FN1 — DAPF SHFR∅6 H
DAPH PCB∅6 H
DAPH ALU14 H

745153 E78 SHFR (∅5:∅4)

FP1 — DAPF SHFR∅5 H
DAPF PCB∅5 H
DAPH ALU13 H
FP2 — DAPF SHFR∅4 H
DAPF PCB∅4 H
DAPH ALU12 H

DAPF SHFRS1 H
DAPF SHFRS∅ H

DAPF ALU∅7 H
DAPF ALU∅6 H
DAPF ALU∅5 H
DAPF ALU∅4 H

74S∅4 E11 — DAPF +3V H

GRAA SHFR3∅ — (FE1) — 74S04 E76 — DAPF SHFR3∅ B H
GRAA SHFRS1 L — (FD2) — 74S04 E76 — DAPF SHFRS1 B H

'745181 - ALU

S3 S2 S1 S∅	M=H LOGIC FUNCTIONS	M=L; ARITHMETIC OPERATIONS $C_N = ∅ = H$	$C_N = 1 = L$
L L L L	F=Ā	F=A	F=A PLUS 1
L L L H	F=Ø	F=MINUS 1 (2'S COMP)	F=ZERO
L H H L	F=A⊕B	F=A MINUS B MINUS 1	F=A MINUS B
L H H H	F=A B̄	F=AB MINUS 1	F=AB
H L L H	F=A⊕B	F=A PLUS B	F=A PLUS B PLUS 1
H L H L	F=B	F=(A+B̄) PLUS AB	F=(A+B̄) PLUS AB PLUS 1
H L H H	F=AB	F=AB MINUS 1	F=AB
H H L L	F=1	F=A PLUS A	F=A PLUS A PLUS 1
H H H L	F=A+B	F=(A+B̄) PLUS A	F=(A+B) PLUS A PLUS 1
H H H H	F=A	F=A MINUS 1	F=A

ALU (C7:C0), SHIFTER (C5:C0), PCA & PCB (C5:C0) SLOT 8

FIRST USED ON OPTION MODEL: 11/45

UNLESS OTHERWISE SPECIFIED DIMENSION IN INCHES TOLERANCES
DECIMALS: XXX ± .005, XX ± .02, X ± .1 — ANGLES: ±0° 30'
REMOVE BURRS AND BREAK SHARP CORNERS SURFACE QUALITY ✓
MATERIAL
FINISH

QTY	DESCRIPTION	PART NO	ITEM NO

PARTS LIST

DRN — DATE 7-12-71
CHK'D — DATE
ENG — DATE
PROJ. ENG — DATE
PROD — DATE

DIGITAL EQUIPMENT CORPORATION MAYNARD MASSACHUSETTS

TITLE: DATA PATHS (D.I.F)

NEXT HIGHER ASSY: B-DD-KB11-A
SCALE
SHEET 7 OF 9

SIZE D — CODE 05 — NUMBER MP00 D-1 — REV D
DIST

REVISIONS: REV | CHANGE NO | CHK

DRAWING NO. D-DD-KB11-B

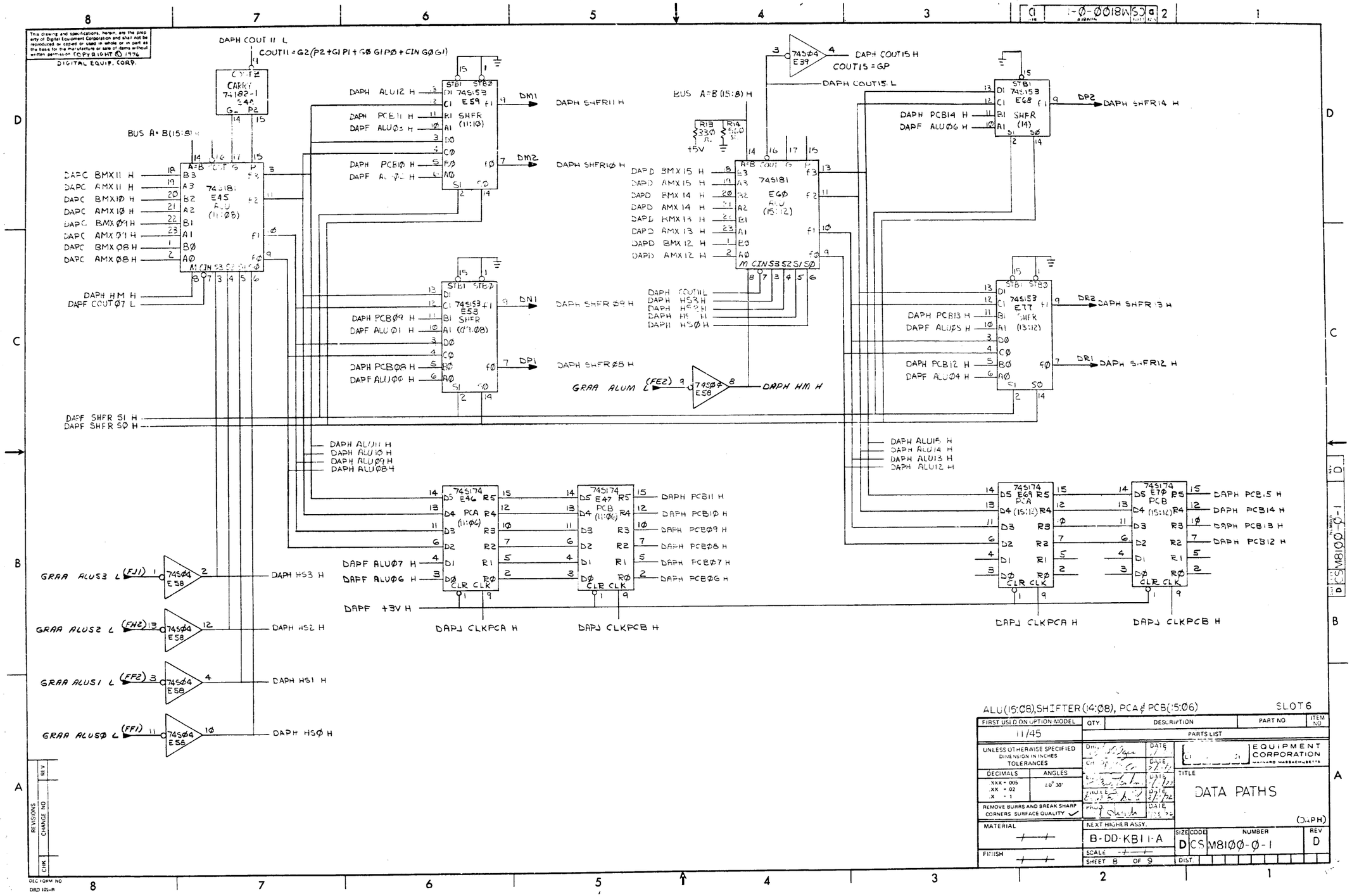

DIGITAL EQUIP. CORP.
COUT11 = G2(P2+G1P1+G0G1P0+CIN G0G1)
CARRY 74182-1 E4A
BUS A=B(15:8)
74S181 E45 ALU (11:08)
74S153 E59 SHFR (11:10)
74S153 E53 SHFR (09:08)
74S04 E39
COUT15 = GP
74S181 E60 ALU (15:12)
74S153 E68 SHFR (14)
74S153 E77 SHFR (13:12)
74S174 E46 PCA (11:06)
74S174 E47 PCB (11:06)
74S174 E69 PCA (15:12)
74S174 E70 PCB (15:12)
DAPJ CLKPCA H
DAPJ CLKPCB H
DAPF +3V H
GRAA ALUS3 L
GRAA ALUS2 L
GRAA ALUS1 L
GRAA ALUS0 L
DAPH HS3 H
DAPH HS2 H
DAPH HS1 H
DAPH HS0 H
DAPH HM H
DAPF SHFR S1 H
DAPF SHFR S0 H
DAPH ALU11 H
DAPH ALU10 H
DAPH ALU09 H
DAPH ALU08 H
DAPH ALU15 H
DAPH ALU14 H
DAPH ALU13 H
DAPH ALU12 H
DAPH SHFR11 H
DAPH SHFR10 H
DAPH SHFR09 H
DAPH SHFR08 H
DAPH SHFR14 H
DAPH SHFR13 H
DAPH SHFR12 H
DAPH PCB11 H
DAPH PCB10 H
DAPH PCB09 H
DAPH PCB08 H
DAPH PCB07 H
DAPH PCB06 H
DAPH PCB15 H
DAPH PCB14 H
DAPH PCB13 H
DAPH PCB12 H
ALU(15:08),SHIFTER(14:08), PCA & PCB(15:06)
SLOT 6
FIRST USED ON OPTION MODEL
11/45
QTY
DESCRIPTION
PART NO
ITEM NO
PARTS LIST
UNLESS OTHERWISE SPECIFIED DIMENSION IN INCHES TOLERANCES
DECIMALS
ANGLES
REMOVE BURRS AND BREAK SHARP CORNERS SURFACE QUALITY
MATERIAL
FINISH
NEXT HIGHER ASSY.
B-DD-KB11-A
SCALE
SHEET 8 OF 9
EQUIPMENT CORPORATION
MAYNARD MASSACHUSETTS
TITLE
DATA PATHS
(DAPH)
SIZE D
CODE CS
NUMBER M8100-0-1
REV D
DIST.
REVISIONS
CHANGE NO
REV
CHK
DEC FORM NO
DRD 102-R

44

This drawing and specifications, herein, are the property of Digital Equipment Corporation and shall not be reproduced or copied or used in whole or in part as the basis for the manufacture or sale of items without written permission COPYRIGHT © 1976
DIGITAL EQUIP. CORP.

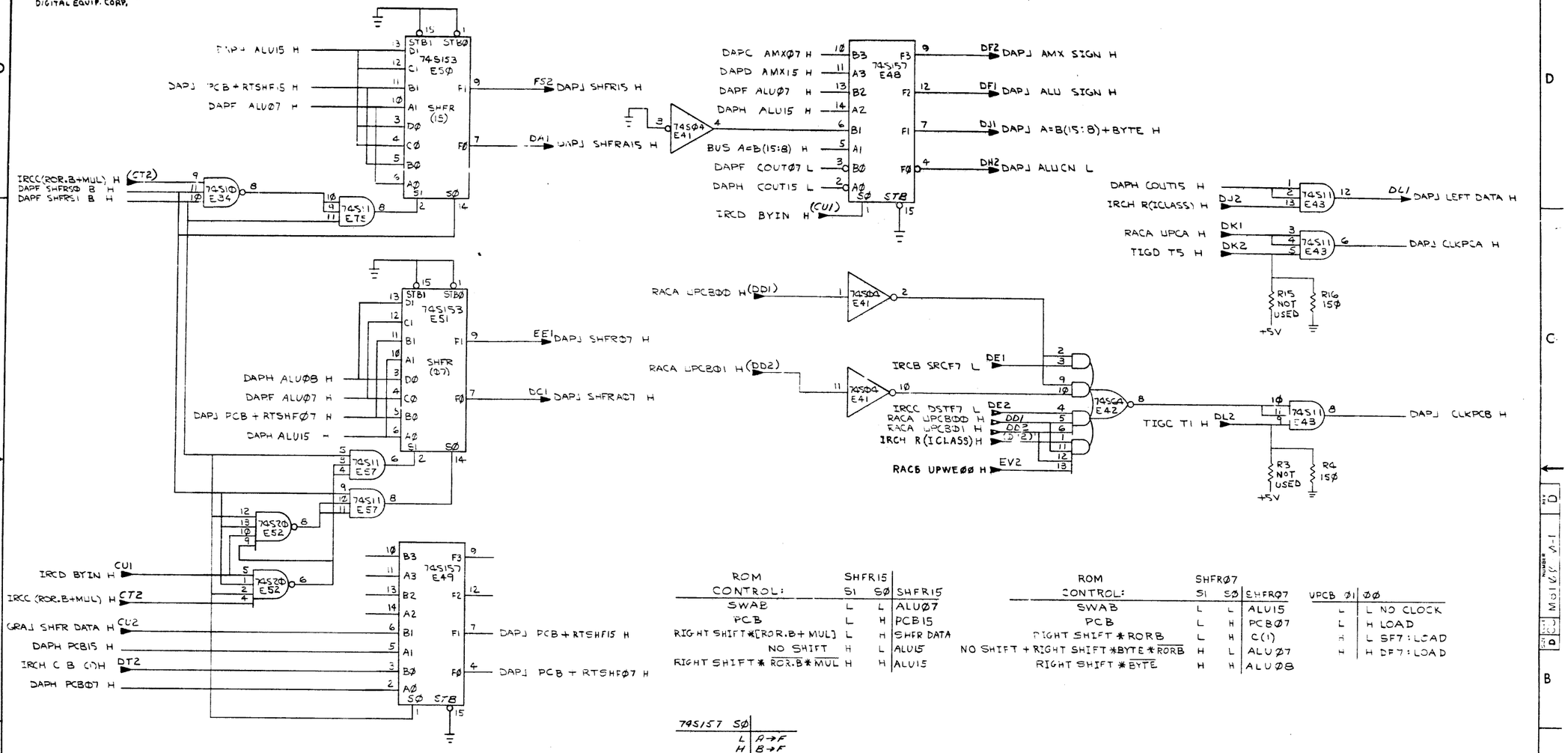

ROM CONTROL:	SHFR15 SI	SHFR15 SØ	SHFR15
SWAB	L	L	ALUØ7
PCB	L	H	PCB15
RIGHT SHIFT*[ROR.B+MUL]	L	H	SHFR DATA
NO SHIFT	H	L	ALU15
RIGHT SHIFT* $\overline{\text{ROR.B*MUL}}$	H	H	ALU15

ROM CONTROL:	SHFRØ7 SI	SHFRØ7 SØ	SHFRØ7
SWAB	L	L	ALU15
PCB	L	H	PCBØ7
RIGHT SHIFT*RORB	L	H	C(1)
NO SHIFT + RIGHT SHIFT *BYTE * $\overline{\text{RORB}}$	H	L	ALUØ7
RIGHT SHIFT * $\overline{\text{BYTE}}$	H	H	ALUØ8

UPCB Ø1	ØØ
L	L NO CLOCK
L	H LOAD
H	L SF7:LOAD
H	H DF7:LOAD

74S157 SØ	
L	A→F
H	B→F

SHIFTER (15:07); PCA & PCB CLOCKS SLOT 6

FIRST USED ON OPTION/MODEL	QTY	DESCRIPTION	PART NO	ITEM NO
11/45		PARTS LIST		

UNLESS OTHERWISE SPECIFIED DIMENSION IN INCHES. TOLERANCES
DECIMALS: .XXX ± .005, .XX ± .02, .X ± 1; ANGLES: ±0° 30'
REMOVE BURRS AND BREAK SHARP CORNERS. SURFACE QUALITY ✓
MATERIAL —
FINISH —

DRN [illegible] DATE 8-12-71
CHK'D [illegible] DATE [illegible]
ENG [illegible] DATE 8/23/72
[illegible] DATE 8/25/72
PROJ [illegible] DATE 9/1/72

EQUIPMENT CORPORATION MAYNARD MASSACHUSETTS

TITLE: DATA PATHS (DAPJ)

NEXT HIGHER ASSY: B-DD-KB11-A
SIZE D | CODE CS | NUMBER MB100-Ø-1 | REV D
SCALE —
SHEET 9 OF 9
DIST

REVISIONS: REV | CHANGE NO | CHK

DEC FORM NO DRD 102-B

NOTES:

1. UNLESS OTHERWISE NOTED RESISTANCE IS IN OHMS & CAPACITANCE IS IN PICOFARADS. CAPACITORS WITHOUT VALUE NOTED ARE .01 MFD.
2. RESISTORS MARKED WITH ASTERISK ARE NOT USED.
3. LOCATIONS MARKED E1, E9, E10, E25, E27, & E42 ARE SPARES.

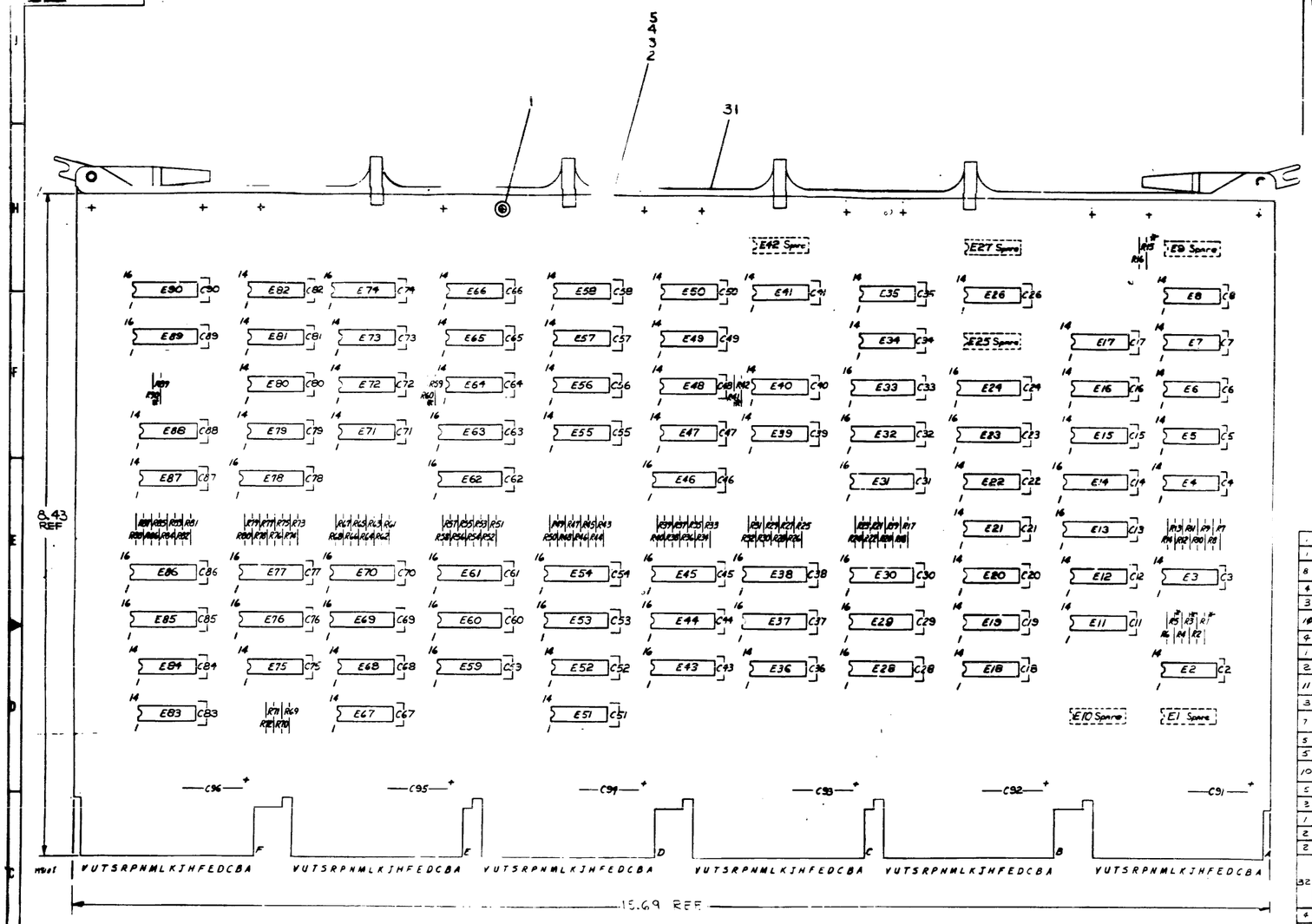

		HANDLE, MODULE		E-PS-MB101-2	31
1	E74	I.C. DEC, DM8598-AD		25-0834N	30
8	E37, E38, E53, E54, E63, E76, E85, E86	IC DEC, 3101A		1910658	29
4	E31, E46, E62, E78	IC DEC 7403/74		1910558	28
3	E28, E43, E59	IC DEC, 7451/74		1910550	27
10	E29, E30, E44, E45, E60, E61, E70, E77, E87, E96	I.C. DEC, 7451/58		1910569	26
4	E23, E24, E32, E33	IC DEC, 7451/53		1910567	25
1	E68	IC.DEC, 7451/12		1910565	24
2	E50, E79	IC DEC, 7451/4		1910566	23
11	E5, E6, E14, E18, E19, E35, E48, E49, E58, E75, C80	I.C. DEC, 7456/4		1910592	22
3	E68, E73, E81	I.C. DEC, 7452/0		1910539	21
7	E8, E21, E34, E41, E65, E71, E82	IC DEC, 7451/1		1910537	20
5	E2, E15, E20, E22, E56	I.C. DEC, 7451/0		1910536	19
5	E11, E12, E52, E68, E84	I.C. DEC, 7450/5		1910535	18
10	E7, E36, E39, E40, E51, E57, E66, E67, E83, E87	IC DEC, 7450/4		1910534	17
5	E9, E16, E17, E26, E88	IC DEC, 7450/2		1910532	16
3	E13, E16	IC. DEC, 7811/91		1910096	15
1	E97	IC. DEC, 7416/50		1909060	14
2	E55, E72	I.C. DEC, 7416/30		1909059	13
2	R76, R76	RES., 150Ω, 1/4W, ±5%		1301401	12
132	R11, R19, R21, R23, R25, R27, R29, R34, R35, R37, R39, R43, R45, R47, R49, R51, R53, R55, R57, R59, R61, R63, R65, R67, R73, R75, R77, R79, R81, R83, R86, R87	RES, 680Ω, 1/8W, ±5%		1301624	11
4	R8, R10, R12, R14	RES, 560Ω, 1/8W, ±5%		1301890	10
7	R2, R4, R6, R16, R82, R84, R85	RES., 150Ω, 1/4W, ±5%		1300250	9
36	R1, R3, R5, R7, R9, R11, R13, R15, R17, R18, R20, R22, R24, R26, R28, R30, R32, R34, R36, R38, R40, R42, R44, R46, R48, R50, R52, R54, R56, R58, R60, R62, R64, R66, R68, R70, R72, R74, R76, R78, R80, R82, R84, R86, R88	RES, 330Ω, 1/4W, ±5%		1300295	8
84	C2-C8, C11-C24, C26, C28-C91, C93-C96	CAP, .01μf, 100V, +20% DISC		1001610	7
6	C91-C96	CAP, 6.8μf, 35V, +20% S TANT		1000067	6
1		ETCHED CIRCUIT BOARD		5007807	5
REF		MODULE ECO HISTORY		B-MM-MB101-0-0	4
		MOUNTING HOLE LAYOUT		E-AH-MB101-0-5	3
		COMPONENT SIDE LOCATION		K-CO-MB101-0-4	2
		MODULE		9006732	1
QTY	REF DESIGNATION	DESCRIPTION		PART NO	ITEM NO

PARTS LIST

ETCH BOARD REV 5

DEC DM8598-AD	8	16				
DEC 3101A	8	16				
DEC 7451/74	8	16				
DEC 7451/58	8	16				
DEC 7451/53	8	16				
DEC 7451/94	8	16				
DEC 7451/12	8	16				
DEC 74191	8	16				
IC TYPE	GND	+5V				
GND AND 5V ARE NORMALLY PIN 7 AND 14 RESPECTIVELY. EXCEPTIONS ARE STATED ABOVE.			ITEM NO.	ASSY	FROM PT	TO PT
IC PIN LOCATIONS			JUMPER LIST			

SEMICONDUCTOR CONVERSION CHART

DEC NO	EIA NO	DEC NO	EIA NO

EQUIPMENT CORPORATION

TITLE: GENERAL REGS. & ALU. CNTL.

NEXT HIGHER ASSY: B-DD-KB11-0

SCALE: 2/1

SHEET 1 OF 9

SIZE E | CS-MB101-0-1 | REV D

46

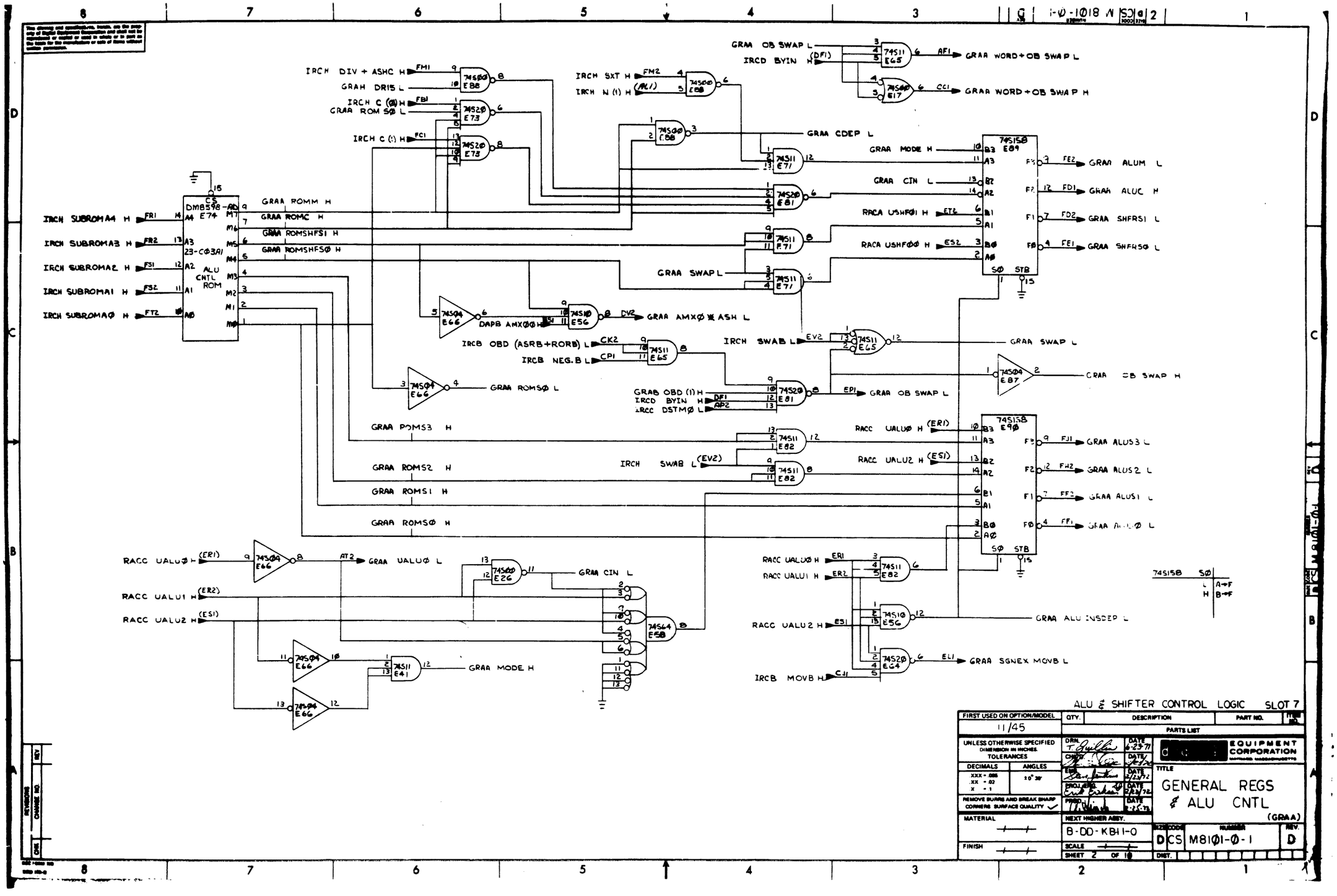

ALU & SHIFTER CONTROL LOGIC SLOT 7
FIRST USED ON OPTION/MODEL
11/45
QTY.
DESCRIPTION
PART NO.
PARTS LIST
UNLESS OTHERWISE SPECIFIED DIMENSION IN INCHES
TOLERANCES
DECIMALS
ANGLES
REMOVE BURRS AND BREAK SHARP CORNERS SURFACE QUALITY
MATERIAL
FINISH
DRN.
CHKD.
ENG.
PROJ. ENG.
PROD.
DATE
EQUIPMENT CORPORATION
TITLE
GENERAL REGS & ALU CNTL
(GRAA)
NEXT HIGHER ASSY.
B-DD-KB11-0
SIZE
CODE
NUMBER
REV.
D
CS
M81Ø1-Ø-1
D
SCALE
SHEET 2 OF 10
DIST.
GRAA OB SWAP L
IRCD BYIN H
GRAA WORD+OB SWAP L
GRAA WORD+OB SWAP H
IRCH DIV + ASHC H
GRAH DR15 L
IRCH C (Ø) H
GRAA ROM SØ L
IRCH C (1) H
IRCH SXT H
IRCH N (1) H
GRAA CDEP L
GRAA MODE H
GRAA CIN L
RACA USHFØ1 H
RACA USHFØØ H
GRAA ALUM L
GRAA ALUC H
GRAA SHFRS1 L
GRAA SHFRSØ L
GRAA SWAP L
IRCH SUBROMA4 H
IRCH SUBROMA3 H
IRCH SUBROMA2 H
IRCH SUBROMA1 H
IRCH SUBROMAØ H
DMB598-AD
E74
23-CØ3A1
ALU CNTL ROM
GRAA ROMM H
GRAA ROMC H
GRAA ROMSHFS1 H
GRAA ROMSHFSØ H
DAPB AMXØØ H
GRAA AMXØ ASH L
IRCB OBD (ASRB+RORB) L
IRCB NEG.B L
IRCH SWAB L
GRAA ROMSØ L
GRAB OBD (1) H
IRCD BYIN H
IRCC DSTMØ L
GRAA OB SWAP H
GRAA ROMS3 H
GRAA ROMS2 H
GRAA ROMS1 H
GRAA ROMSØ H
RACC UALUØ H
RACC UALU2 H
GRAA ALUS3 L
GRAA ALUS2 L
GRAA ALUS1 L
RACC UALUØ H
RACC UALU1 H
RACC UALU2 H
GRAA UALUØ L
GRAA CIN L
GRAA MODE H
GRAA ALU INSDEP L
GRAA SGNEX MOVB L
IRCB MOVB H
74S15B

47

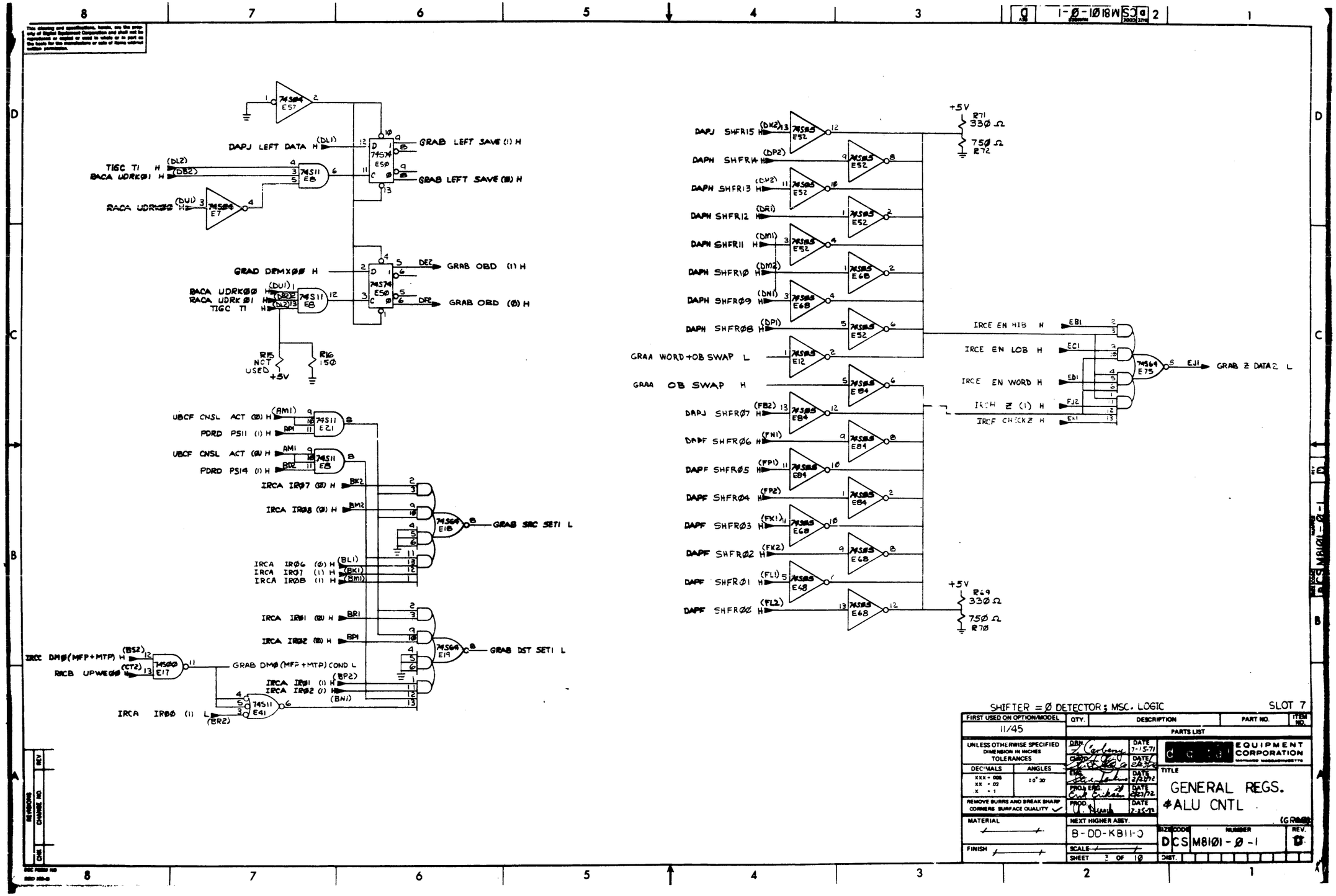

DAPJ LEFT DATA H
GRAB LEFT SAVE (1) H
GRAB LEFT SAVE (Ø) H
TIGC T1 H
RACA UDRKØ1 H
RACA UDRKØØ H
GRAD DRMXØØ H
GRAB OBD (1) H
GRAB OBD (Ø) H
R15 NOT USED
R16 15Ø
+5V
UBCF CNSL ACT (Ø) H
PDRD PS11 (1) H
UBCF CNSL ACT (Ø) H
PDRD PS14 (1) H
IRCA IRØ7 (Ø) H
IRCA IRØ8 (Ø) H
GRAB SRC SET1 L
IRCA IRØ6 (Ø) H
IRCA IRØ7 (1) H
IRCA IRØ8 (1) H
IRCA IRØ1 (Ø) H
IRCA IRØ2 (Ø) H
GRAB DST SET1 L
IRCC DMØ(MFP+MTP) H
RACB UPWEØØ H
GRAB DMØ(MFP+MTP) COND L
IRCA IRØ1 (1) H
IRCA IRØ2 (1) H
IRCA IRØØ (1) L
DAPJ SHFR15 H
DAPH SHFR14 H
DAPH SHFR13 H
DAPH SHFR12 H
DAPH SHFR11 H
DAPH SHFR1Ø H
DAPH SHFRØ9 H
DAPH SHFRØ8 H
GRAA WORD+OB SWAP L
GRAA OB SWAP H
DAPJ SHFRØ7 H
DAPF SHFRØ6 H
DAPF SHFRØ5 H
DAPF SHFRØ4 H
DAPF SHFRØ3 H
DAPF SHFRØ2 H
DAPF SHFRØ1 H
DAPF SHFRØØ H
+5V
R71 33Ø Ω
75Ø Ω R72
IRCE EN HIB H
IRCE EN LOB H
IRCE EN WORD H
IRCH Z (1) H
IRCF CHECKZ H
GRAB Z DATA2 L
+5V
R69 33Ø Ω
75Ø Ω R7Ø
SHIFTER = Ø DETECTOR; MSC. LOGIC
SLOT 7
FIRST USED ON OPTION/MODEL
11/45
QTY.
DESCRIPTION
PART NO.
ITEM NO.
PARTS LIST
UNLESS OTHERWISE SPECIFIED DIMENSION IN INCHES TOLERANCES
DECIMALS
ANGLES
REMOVE BURRS AND BREAK SHARP CORNERS SURFACE QUALITY
MATERIAL
FINISH
DRN.
CHKD.
ENG.
PROJ. ENG.
PROD.
DATE 7-15-71
DATE 2/23/72
DATE 2/23/72
DATE 2/23/72
DATE 2-25-72
EQUIPMENT CORPORATION
TITLE
GENERAL REGS. & ALU CNTL
NEXT HIGHER ASSY.
B-DD-KB11-0
SCALE
SHEET 3 OF 10
SIZE D
CODE CS
NUMBER M8101-Ø-1
REV. D
DIST.

48

This drawing and specifications, herein, are the property of Digital Equipment Corporation and shall not be reproduced or copied or used in whole or in part as the basis for the manufacture or sale of items without written permission.

GRAC DM0(MFP+MTP)COND H
IRCC DM0(MFP + MTP) H
GRAC GRAD EN L
RACB UPWE00 H (CT2)
74S11 E34
LBCF CNSL ACT (1) H BJ1
IRCA IR03 (1) H BK2
74S00 E3
PDRD PS12 (1) H BB2
IRCD DSTF6 H (BK1)
74S10 E20
DK1 GRAC ACT * IR03 L
RACB UPAD01 H (AC1)
RACB UPAD02 H (AB1)
74S11 E34
RACB UPAD 00 H AD1
74S04 E40
GRAC PAD00 L
STB1 STB0
74S153 E32
GDAM (2:1)
IRCA IR02 (1) H BN1
IRCA IR0B (1) H BM1
IRCA IR01 (1) H BP1
IRCA IR07 (1) H BK1
GRAC GDA2 H
GRAC GDA1 H
RACB UPAD01 H (AC1)
RACB UPAD00 H (AB1)
GRAC GRAD EN L
STB1 STB0
74S153 E33
GSAM (2:1)
GRAC GSA2 H
GRAC GSA1 H
74S04 E39
GRAC +3V H
PDRD PS15 (1) H BB2
GRAC +3V H
STB1 STB0
74S153 E23
GDAM (0)
PDRD PS14 (1) L BD1
PDRD PS11 (1) L BC1
GRAB DST SET 1 L
GRAB SRC SET 1 L
GRAC GDA0 H
GRAC GDA2 H
GRAC GDA1 H
74S04 E39
74S10 E16
GRAC GD6 L BE1
74S10 E20
GRAC GDREG SET 1 H
STB1 STB0
74S153 E24
GSAM (0)
GRAC GSA0 H
GRAC GSA2 H
GRAC GSA1 H
74S10 E20
GRAC GSREG SET 1 H
NOT USED R41 R42 150 +5V
GRAC TG L
74S64 E48
74S04 E57
GRAC GRWE HIB L
SSRA INH PWE L
TIGD T5 H
RACB UPWE00 H
IRCD BYIN * (-MOVB) L
RACB UPWE00 H
IRCB ICLASS L
(CJ3)
74S64 E49
74S04 E57
GRAC GRWE LOB L
74S04 E40
TIGD T4 H DS1
NOT USED R60 R59 150 +5V
74S112 E63
TIGC TF H EM1
NOT USED R90 R89 150 +5V
74S112 E63
EL2
GRAC GATE T6 H
74S00 E88
DU2
GRAC T6 L
GRAC GSA0 H
74S04 E39
BE2
GRAC GRA0 L
GRAC GSA1 H
74S04 E39
BF1
GRAC GRA1 L
GRAC GSA2 H
74S04 E39
BF2
GRAC GRA2 L
GRAC GDREG SET 1 H
74S04 E39
BH2
GRAC GRA3 L
RACB UPAD01 H AC1
RACB UPAD02 H AB2
74S11 E34
GRAC PAD00 L
74S00 E17
GRAC PLUS 1 L
IRCA IR06 (1) L BL1
GRAC PLUS 1 L
IRCA IR08 (1) H (BK1)
IRCA IR07 (1) H (BK2)
PDRD PS15 (1) H (BB2)
74S10 E15
IRCD DSTF6 H DC1
74S04 E40
UBCF CNSL ACT(0) L (BJ1)
IRCA IR00 (1) L BR2
74S64 E35
PDRD PS15 (1) L AR2
GRAB DMS (MFP + MTP) COND L
PDRD PS13 (1) L BL2
GRAC DM0(MFP+MTP) COND H
IRCB SRCF7 L CH2
RACA USRX00 H DH2
RACA USRX01 H CJ1
74H50 E47
74S04 E57
GRAC SRMX SEL L
IRCC DSTF7 L DA1
RACA UDRX00 H DJ1
RACA UDRX01 H DJ2
74H50 E47
74S04 E57
GRAC DRMX SEL L

GDAM

UPAD	S1	S0	ADDR OUTPUT
0	L	L	SF
4	L	L	SFVI
1+5	L	H	DF
2	H	L	5
3+7	H	H	6

GSAM

UPAD	S1	S0	ADDR OUTPUT
0+1	L	L	SF
4	L	L	SFVI
5	L	H	DF
2+3	H	L	5
7	H	H	6

UPWE 01	00	GRWE LOB	GRWE HIB
L	L	DON'T WRITE	DON'T WRITE
L	H	WRITE COND: I CLASS	WRITE COND: I CLASS + BYTE INST + MOVR (SIGN EXTEN EN)
H	L	WRITE	WRITE
H	H	NOT USED	NOT USED

USRX	01	00	OUTPUT (SRMX)
L	L	L	SHFR
L	H	H	GS
H	L	L	SF7 : SHFR ; $\overline{SF7}$: GS
H	H	H	NOT USED

UDRX	01	00	OUTPUT (DRMX)
L	L	L	SHFR
L	H	H	GD
H	L	L	DF1 : SHFR ; $\overline{DF1}$: GD
H	H	H	CLEAR DR

GENERAL REGS ADDR & WRITE PULSE CNTL SLOT 7

FIRST USED ON OPTION/MODEL	QTY.	DESCRIPTION	PART NO.	ITEM NO.
11/45		PARTS LIST		

UNLESS OTHERWISE SPECIFIED DIMENSION IN INCHES TOLERANCES
DECIMALS: XXX ± .005, XX ± .02, X ± .1 — ANGLES: ±0° 30'
REMOVE BURRS AND BREAK SHARP CORNERS SURFACE QUALITY ✓
MATERIAL —
FINISH —

DRAWN 10 DATE 12/6/71
CHECK DATE 2/7/72
ENGR DATE 2/23/72
PROJ. ENGR DATE 3/22/72
PROD DATE 2-26-72
NEXT HIGHER ASSY. B-DD-KB11-0

EQUIPMENT CORPORATION MAYNARD MASSACHUSETTS

TITLE: GENERAL REGS & ALU CNTL (GRAC)

SIZE D | CODE CS | NUMBER M8101-0-1 | REV D
SCALE —
SHEET 4 OF 10
DIST.

REVISIONS: REV. | CHANGE NO. | DWR.

DRAWING 40-823 10640
DEC FORM 140
DRD 333-B

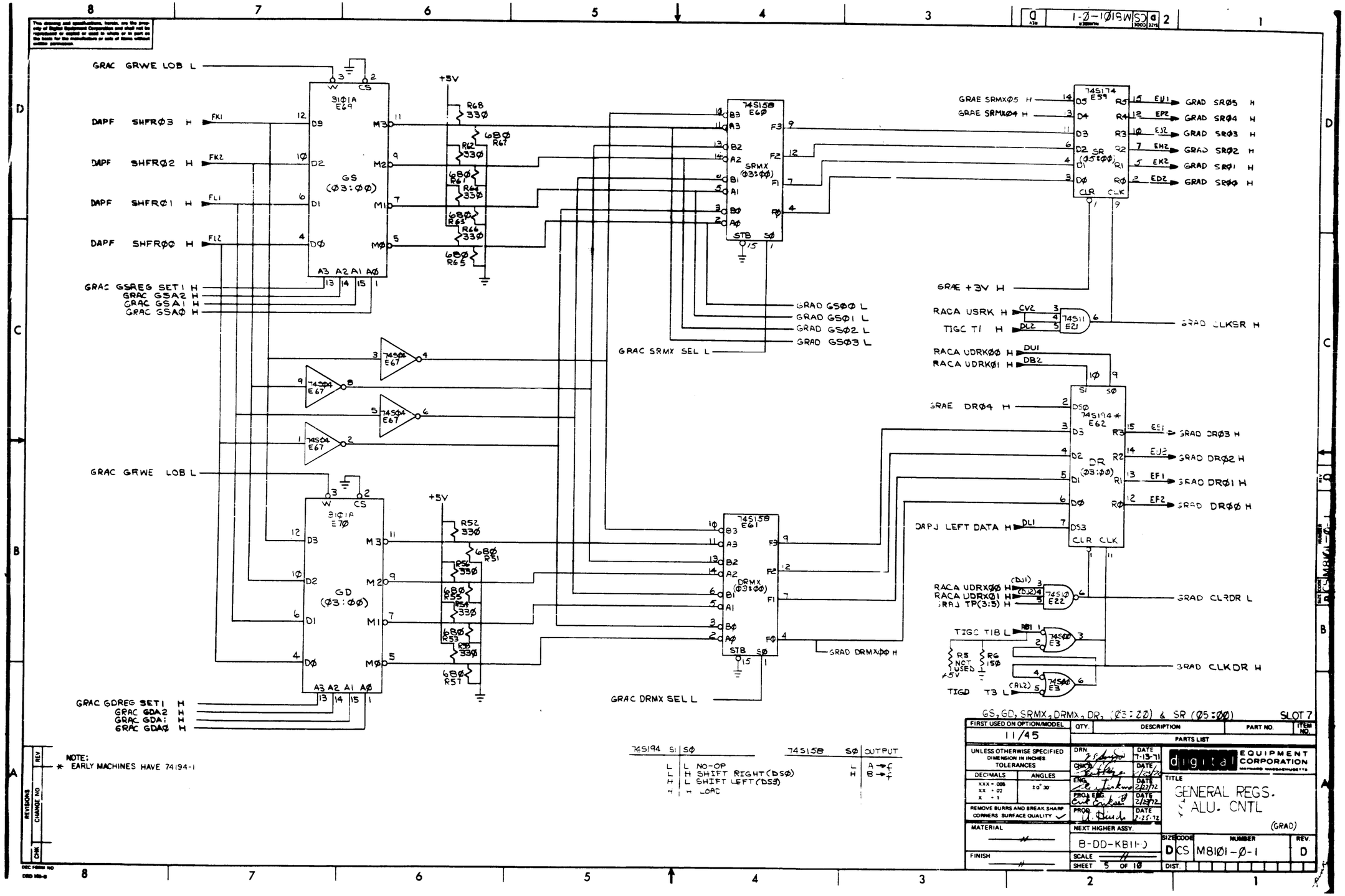
GRAC GRWE LOB L
DAPF SHFRØ3 H
DAPF SHFRØ2 H
DAPF SHFRØ1 H
DAPF SHFRØØ H
GRAC GSREG SET1 H
GRAC GSA2 H
GRAC GSA1 H
GRAC GSAØ H
GRAC GRWE LOB L
GRAC GDREG SET1 H
GRAC GDA2 H
GRAC GDA1 H
GRAC GDAØ H
GS (Ø3:ØØ)
GD (Ø3:ØØ)
SRMX (Ø3:ØØ)
DRMX (Ø3:ØØ)
SR (Ø5:ØØ)
DR (Ø3:ØØ)
GRAD GSØØ L
GRAD GSØ1 L
GRAD GSØ2 L
GRAD GSØ3 L
GRAC SRMX SEL L
GRAC DRMX SEL L
GRAD DRMXØØ H
GRAE SRMXØ5 H
GRAE SRMXØ4 H
GRAD SRØ5 H
GRAD SRØ4 H
GRAD SRØ3 H
GRAD SRØ2 H
GRAD SRØ1 H
GRAD SRØØ H
GRAE +3V H
RACA USRK H
TIGC T1 H
GRAD CLKSR H
RACA UDRKØØ H
RACA UDRKØ1 H
GRAE DRØ4 H
GRAD DRØ3 H
GRAD DRØ2 H
GRAD DRØ1 H
GRAD DRØØ H
DAPJ LEFT DATA H
RACA UDRXØØ H
RACA UDRXØ1 H
GRAJ TP(3:5) H
GRAD CLRDR L
TIGC T1B L
TIGD T3 L
GRAD CLKDR H
R5 NOT USED
R6 15Ø
+5V
GS, GD, SRMX, DRMX, DR, (Ø3:ØØ) & SR (Ø5:ØØ)
SLOT 7
NOTE:
* EARLY MACHINES HAVE 74194-1
74S194 S1 SØ
L L NO-OP
L H SHIFT RIGHT (DSØ)
H L SHIFT LEFT (DS3)
H H LOAD
74S158 SØ OUTPUT
L A→f
H B→f
FIRST USED ON OPTION/MODEL
11/45
QTY. DESCRIPTION PART NO. ITEM NO.
PARTS LIST
UNLESS OTHERWISE SPECIFIED DIMENSION IN INCHES TOLERANCES
DECIMALS ANGLES
REMOVE BURRS AND BREAK SHARP CORNERS SURFACE QUALITY
MATERIAL
FINISH
DRN. DATE 7-13-71
CHK'D DATE
ENG. DATE 2/23/72
PROJ. ENG. DATE 2/23/72
PROD. DATE 2-25-72
NEXT HIGHER ASSY.
B-DD-KB11-D
SCALE
SHEET 5 OF 10
digital EQUIPMENT CORPORATION
MAYNARD MASSACHUSETTS
TITLE
GENERAL REGS. & ALU. CNTL
(GRAD)
SIZE D CODE CS NUMBER M81Ø1-Ø-1 REV. D
DIST.
REVISIONS
REV
CHANGE NO
CHK

50

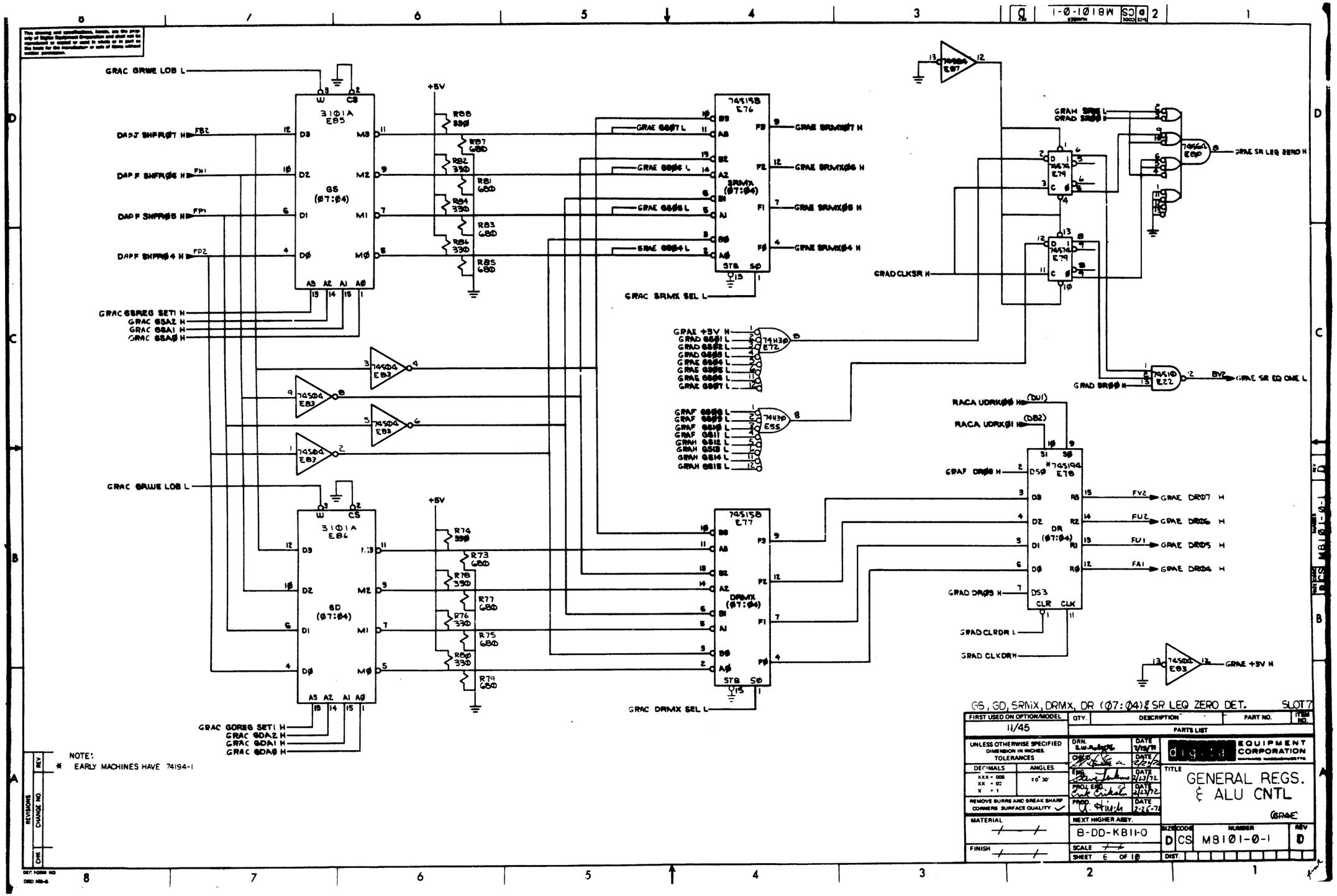
GS, GD, SRMX, DRMX, DR (Ø7:Ø4) & SR LEQ ZERO DET.
SLOT7
FIRST USED ON OPTION/MODEL
11/45
QTY.
DESCRIPTION
PART NO.
ITEM NO.
PARTS LIST
UNLESS OTHERWISE SPECIFIED DIMENSION IN INCHES.
TOLERANCES
DECIMALS
ANGLES
REMOVE BURRS AND BREAK SHARP CORNERS SURFACE QUALITY
MATERIAL
FINISH
NEXT HIGHER ASSY.
B-DD-KB11-0
SCALE
SHEET 6 OF 10
EQUIPMENT CORPORATION
TITLE
GENERAL REGS. & ALU CNTL
(GRAE)
SIZE
CODE
NUMBER
REV
D
CS
M8101-0-1
D
DIST.
NOTE:
* EARLY MACHINES HAVE 74194-1
REVISIONS
CHANGE NO.
REV
CHK
GRAC GRWE LOB L
DAPJ SHFRØ7 H
DAPF SHFRØ6 H
DAPF SHFRØ5 H
DAPF SHFRØ4 H
GRAC GSREG SET1 H
GRAC GSA2 H
GRAC GSA1 H
GRAC GSAØ H
GRAC GDREG SET1 H
GRAC GDA2 H
GRAC GDA1 H
GRAC GDAØ H
GRAC SRMX SEL L
GRAC DRMX SEL L
GRAE +3V H
GRAD CLKSR H
GRAD SRØØ H
GRAE SR LEQ ZERO H
GRAE SR EQ ONE L
RACA UDRKØØ H
RACA UDRKØ1 H
GRAF DRØ8 H
GRAD DRØ3 H
GRAD CLRDR L
GRAD CLKDR H
GRAE DRØ7 H
GRAE DRØ6 H
GRAE DRØ5 H
GRAE DRØ4 H
GRAE +3V H
3101A E85
GS (Ø7:Ø4)
3101A E86
GD (Ø7:Ø4)
74S158 E76
SRMX (Ø7:Ø4)
74S158 E77
DRMX (Ø7:Ø4)
74S04 E87
74S74 E79
74S10 E22
74H30 E72
74H30 E55
74S194 E78
DR (Ø7:Ø4)
74S04 E83
+5V
R88 330
R87 680
R82 330
R81 680
R84 330
R83 680
R86 330
R85 680
R74 330
R73 680
R78 330
R77 680
R76 330
R75 680
R80 330
R79 680

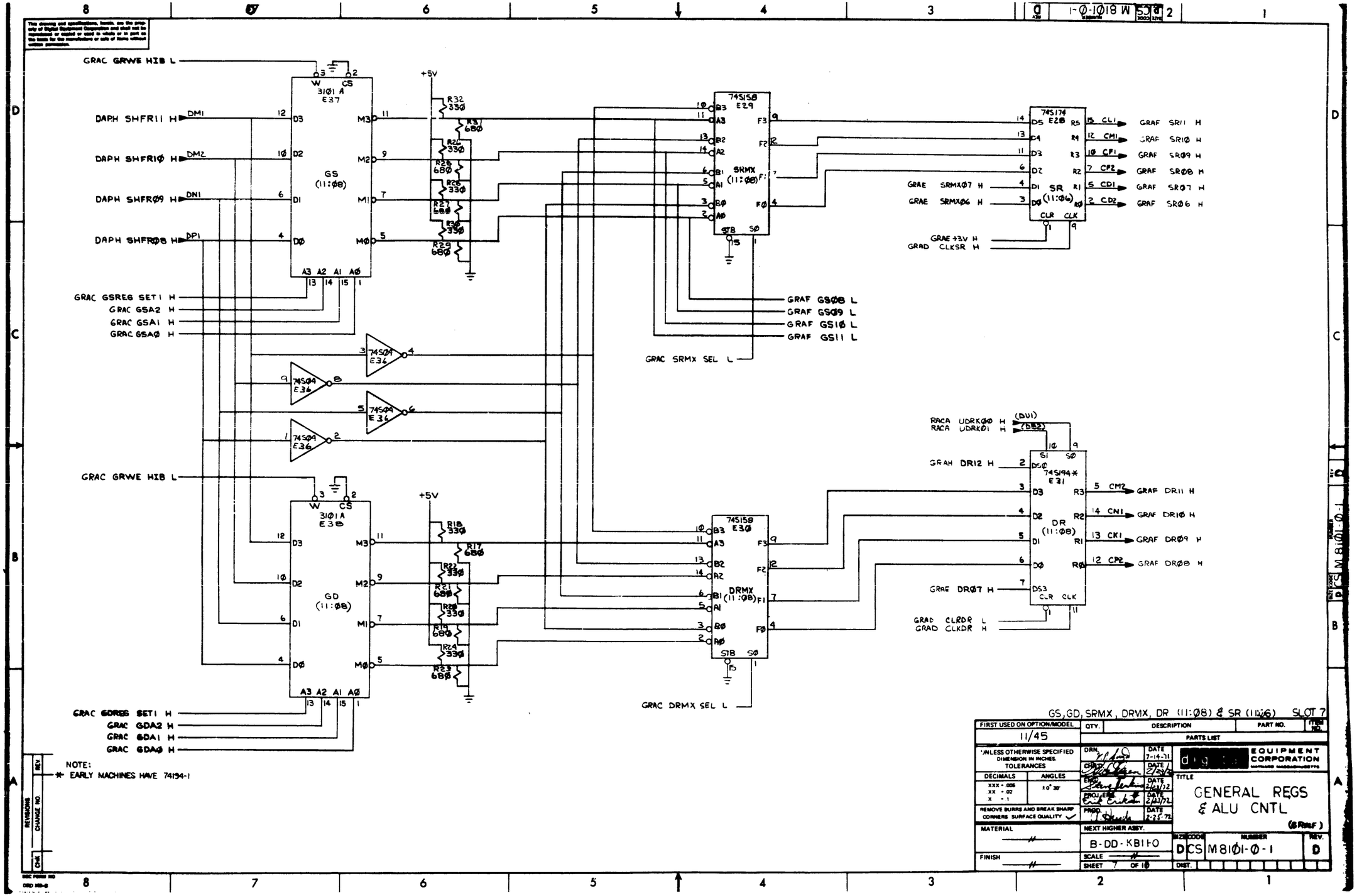
GRAC GRWE HIB L
DAPH SHFR11 H
DAPH SHFR10 H
DAPH SHFR09 H
DAPH SHFR08 H
GRAC GSREG SET1 H
GRAC GSA2 H
GRAC GSA1 H
GRAC GSA0 H
GRAC GDREG SET1 H
GRAC GDA2 H
GRAC GDA1 H
GRAC GDA0 H
3101 A E37
GS (11:08)
3101 A E38
GD (11:08)
74S158 E29
SRMX (11:08)
74S158 E30
DRMX (11:08)
74S174 E28
SR (11:06)
74S194* E31
DR (11:08)
GRAF SR11 H
GRAF SR10 H
GRAF SR09 H
GRAF SR08 H
GRAF SR07 H
GRAF SR06 H
GRAE SRMX07 H
GRAE SRMX06 H
GRAE +3V H
GRAD CLKSR H
GRAF GS08 L
GRAF GS09 L
GRAF GS10 L
GRAF GS11 L
GRAC SRMX SEL L
GRAC DRMX SEL L
RACA UDRK00 H
RACA UDRK01 H
GRAH DR12 H
GRAF DR11 H
GRAF DR10 H
GRAF DR09 H
GRAF DR08 H
GRAE DR07 H
GRAD CLRDR L
GRAD CLKDR H
+5V
NOTE:
* EARLY MACHINES HAVE 74194-1
GS, GD, SRMX, DRMX, DR (11:08) & SR (11:06) SLOT 7
FIRST USED ON OPTION/MODEL
11/45
QTY. DESCRIPTION PART NO. ITEM NO.
PARTS LIST
UNLESS OTHERWISE SPECIFIED DIMENSION IN INCHES. TOLERANCES
DECIMALS XXX ± .005 XX ± .02 X ± .1
ANGLES ±0° 30'
REMOVE BURRS AND BREAK SHARP CORNERS SURFACE QUALITY
MATERIAL
FINISH
DRN. DATE 7-14-71
CHKD. DATE 2/23/72
ENG. DATE 2/23/72
PROJ. ENG. DATE 2/23/72
PROD. DATE 2-25-72
NEXT HIGHER ASSY. B-DD-KB11-0
SCALE
SHEET 7 OF 10
EQUIPMENT CORPORATION
TITLE GENERAL REGS & ALU CNTL
(GRAF)
SIZE D CODE CS NUMBER M8101-0-1 REV. D
DIST.

52

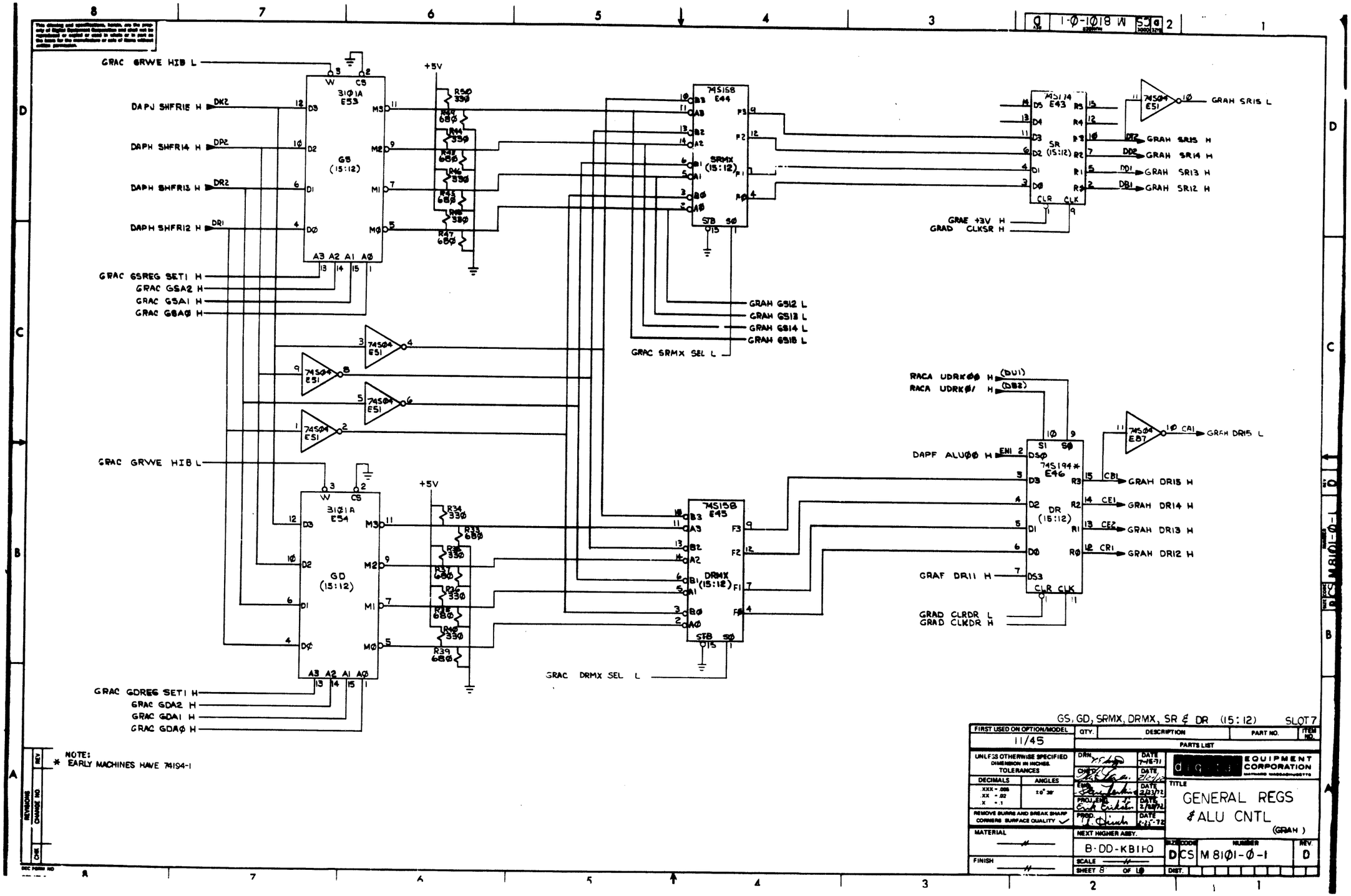
GRAC GRWE HIB L
DAPJ SHFR1E H
DAPH SHFR14 H
DAPH SHFR13 H
DAPH SHFR12 H
GRAC GSREG SET1 H
GRAC GSA2 H
GRAC GSA1 H
GRAC GSAØ H
GRAC GRWE HIB L
GRAC GDREG SET1 H
GRAC GDA2 H
GRAC GDA1 H
GRAC GDAØ H
31Ø1A E53
GS (15:12)
31Ø1A E54
GD (15:12)
74S158 E44
SRMX (15:12)
74S158 E45
DRMX (15:12)
74S174 E43
SR (15:12)
74S194* E46
DR (15:12)
74SØ4 E51
74SØ4 E87
GRAH SR15 L
GRAH SR15 H
GRAH SR14 H
GRAH SR13 H
GRAH SR12 H
GRAE +3V H
GRAD CLKSR H
GRAH GS12 L
GRAH GS13 L
GRAH GS14 L
GRAH GS15 L
GRAC SRMX SEL L
GRAC DRMX SEL L
RACA UDRKØØ H
RACA UDRKØ1 H
DAPF ALUØØ H
GRAH DR15 L
GRAH DR15 H
GRAH DR14 H
GRAH DR13 H
GRAH DR12 H
GRAF DR11 H
GRAD CLRDR L
GRAD CLKDR H
NOTE:
* EARLY MACHINES HAVE 74194-1
GS, GD, SRMX, DRMX, SR & DR (15:12) SLOT7
FIRST USED ON OPTION/MODEL
11/45
QTY. DESCRIPTION PART NO. ITEM NO.
PARTS LIST
UNLESS OTHERWISE SPECIFIED DIMENSION IN INCHES TOLERANCES
DECIMALS ANGLES
REMOVE BURRS AND BREAK SHARP CORNERS SURFACE QUALITY
MATERIAL
FINISH
NEXT HIGHER ASSY.
B-DD-KB11-0
SCALE
SHEET 8 OF 10
EQUIPMENT CORPORATION
TITLE
GENERAL REGS & ALU CNTL
(GRAH)
SIZE D CODE CS NUMBER M 81Ø1-Ø-1 REV. D
DIST.

53

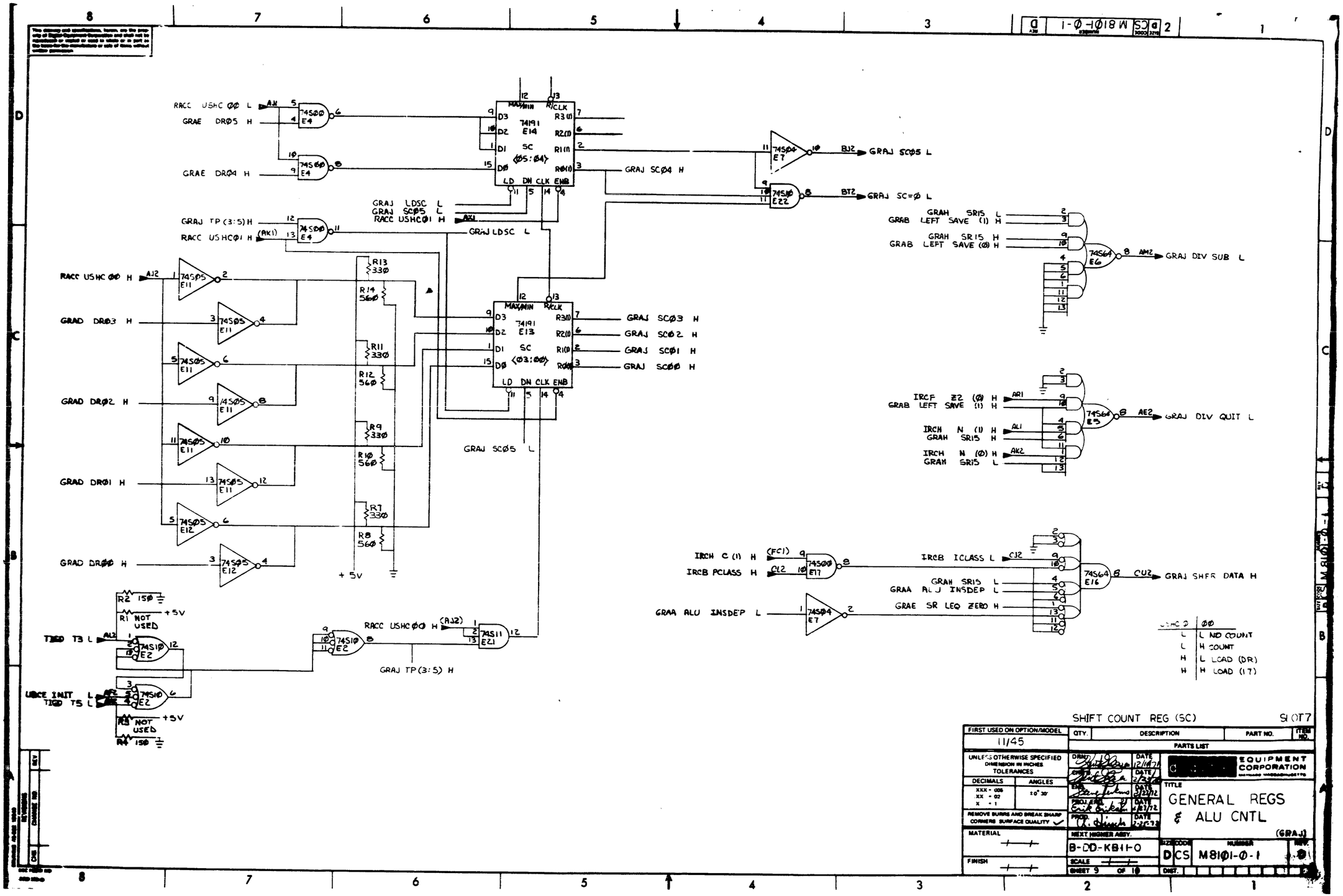

RACC USHC ØØ L
GRAE DRØ5 H
GRAE DRØ4 H
74SØØ E4
74191 E14 SC ⟨Ø5:Ø4⟩
GRAJ SCØ4 H
74SØ4 E7
BJ2 GRAJ SCØ5 L
74S1Ø E22
BT2 GRAJ SC=Ø L
GRAJ LDSC L
GRAJ SCØ5 L
RACC USHCØ1 H
GRAJ TP (3:5) H
RACC USHCØ1 H
GRAJ LDSC L
GRAH SR15 L
GRAB LEFT SAVE (1) H
GRAH SR15 H
GRAB LEFT SAVE (Ø) H
74S64 E6
AM2 GRAJ DIV SUB L
RACC USHC ØØ H
GRAD DRØ3 H
GRAD DRØ2 H
GRAD DRØ1 H
GRAD DRØØ H
74SØ5 E11
74SØ5 E12
R13 33Ø
R14 56Ø
R11 33Ø
R12 56Ø
R9 33Ø
R1Ø 56Ø
R7 33Ø
R8 56Ø
+5V
74191 E13 SC ⟨Ø3:ØØ⟩
GRAJ SCØ3 H
GRAJ SCØ2 H
GRAJ SCØ1 H
GRAJ SCØØ H
GRAJ SCØ5 L
IRCF Z2 (Ø) H
GRAB LEFT SAVE (1) H
IRCH N (1) H
GRAH SR15 H
IRCH N (Ø) H
GRAH SR15 L
74S64 E5
AE2 GRAJ DIV QUIT L
IRCH C (1) H
IRCB PCLASS H
74SØØ E17
IRCB ICLASS L
GRAH SR15 L
GRAA ALU INSDEP L
GRAE SR LEQ ZERO H
74S64 E16
CU2 GRAJ SHFR DATA H
GRAA ALU INSDEP L
74SØ4 E7
R2 15Ø
R1 NOT USED
TIGD T3 L
74S1Ø E2
RACC USHCØØ H
74S11 E21
GRAJ TP (3:5) H
UBCE INIT L
TIGD T5 L
R3 NOT USED
R4 15Ø
USHC Ø ØØ
L L NO COUNT
L H COUNT
H L LOAD (DR)
H H LOAD (17)
SHIFT COUNT REG (SC)
SLOT7
FIRST USED ON OPTION/MODEL
11/45
QTY. DESCRIPTION PART NO. ITEM NO.
PARTS LIST
UNLESS OTHERWISE SPECIFIED DIMENSION IN INCHES TOLERANCES
DECIMALS ANGLES
XXX - .005 ±0° 30'
XX - .02
X - .1
REMOVE BURRS AND BREAK SHARP CORNERS SURFACE QUALITY
MATERIAL
FINISH
DRN DATE 12/14/71
CHK DATE 2/25/72
ENG DATE 2/22/72
PROJ ENG DATE 2/21/72
PROD DATE 2-25-72
NEXT HIGHER ASSY.
B-DD-KB11-0
SCALE
SHEET 9 OF 10
EQUIPMENT CORPORATION
TITLE
GENERAL REGS & ALU CNTL
(GRAJ)
SIZE D CODE CS NUMBER M81Ø1-Ø-1 REV. D
DIST.

54

INSTRUCTION	OCTAL ADDRESS
ROR.B	00
ROL.B	01
ASR.B	02
ASL.B	03
MARK	04
MFP	05
MTP	06
SXT	07
CLR.B	10
COM.B	11
INC.B	12
DEC.B	13
NEG.B	14
ADC.B	15
SBC.B	16
TST.B	17
SUB	20
MOV.B	21
CMP.B	22
BIT.B	23
BIC.B	24
BIS.B	25
ADD	26
———	27
MUL	30
DIV	31
ASH	32
ASHC	33
XOR	34
———	35
———	36
SOB	37

ALU CNTL ROM DM8598-AD								
[illegible]	[illegible]	[illegible]	[illegible]	[illegible]	[illegible]	[illegible]	[illegible]	[illegible]
M7	M6	M5	M4	M3	M2	M1	M0
L	L	H	H	L	L	L	L
H	H	H	L	H	H	L	L
L	L	H	H	L	L	L	L
L	L	H	L	H	H	L	L
L	L	L	L	L	L	L	L
H	L	H	L	H	L	H	L
H	L	H	L	H	L	H	L
H	L	H	L	L	L	H	H
H	L	H	L	L	L	H	H
H	L	H	L	L	L	L	L
L	H	H	L	L	L	L	L
L	L	H	L	H	H	H	H
H	L	H	L	L	L	L	L
H	H	H	L	L	L	L	L
H	H	H	L	H	H	H	H
L	L	H	L	L	L	L	L
L	H	H	L	L	H	H	L
H	L	H	L	H	L	H	L
L	L	H	L	L	L	H	L
H	L	H	L	H	L	H	H
H	L	H	L	L	H	H	H
H	L	H	L	H	H	H	L
L	L	H	L	H	L	L	H
L	L	L	L	L	L	L	L
L	H	H	H	L	H	H	L
L	H	H	L	H	H	L	L
L	L	L	H	L	L	L	L
L	H	H	L	H	H	L	L
H	L	H	L	L	H	H	L
L	L	L	L	L	L	L	L
L	L	L	L	L	L	L	L
L	L	L	L	L	L	L	L
SWAB							

INSTRUCTION DEP. ALU FUNCTION (RACC UALU (2:0)=7)
F=A
F=A PLUS A PLUS CRIT
F=A
F=A PLUS A
NOT INST. DEP.
F=B
F=B
M: F=MINUS 1 ; M: F=B
F=B
F=B
F=A PLUS 1
F=A MINUS 1
F=A
F=A PLUS C BIT
F=A MINUS C BIT
F=A
F=A MINUS B
F=B
F=A MINUS B MINUS 1
F=AB
F=AB
F=A+B
F=A PLUS B
———
F=A MINUS B
F=A PLUS A PLUS DR15
NOT INST. DEP.
F=A PLUS A PLUS DR15
F=A ⊻ B
———
———
NOT INST. DEP.
F=A

INSTRUCTION DEP. SHFR FUNCTION (RACC UALU (2:0)=7)
RIGHT SHIFT
NO - SHIFT **
RIGHT SHIFT
NO - SHIFT **
NOT INST. DEP.
NO - SHIFT
NO - SHIFT
NO - SHIFT
NO - SHIFT **
NO - SHIFT **
NO - SHIFT **
NO - SHIFT **
NO - SHIFT
NO - SHIFT **
NO - SHIFT **
NO - SHIFT **
NO - SHIFT **
NO - SHIFT **
NO - SHIFT **
NO - SHIFT
———
RIGHT SHIFT
NO - SHIFT
NOT INST. DEP. *
NO - SHIFT
NO - SHIFT
———
———
NOT INST. DEP.
SWAP BYTES

NOTE: SWAB INST. HAS SAME ROM ADDRESS AS ASL.B
*ROMSHF OUTPUTS USED TO DECODE ASH
**ODD BYTE*BYTE INSTR: SWAP BYTES

ALU CNTL ROM MAP — SLOT 7

FIRST USED ON OPTION/MODEL	QTY.	DESCRIPTION	PART NO.	ITEM NO.
11/45		PARTS LIST		

UNLESS OTHERWISE SPECIFIED DIMENSION IN INCHES TOLERANCES
DECIMALS: XXX ± .005, .XX ± .02, .X ± .1 — ANGLES: ±0° 30'
REMOVE BURRS AND BREAK SHARP CORNERS SURFACE QUALITY ✓
MATERIAL —
FINISH —

DRN. [illegible] DATE 1-25-71
DES. [illegible] DATE 1-31-72
ENG. [illegible] DATE 2/7/72
PROJ ENG. Dick Eikenberry DATE 2/17/72
PROD. [illegible] DATE 3-15-72

digital EQUIPMENT CORPORATION

TITLE: GENERAL REGS. & ALU CNTL (GRAK)

NEXT HIGHER ASSY. B-DD-KB11-0
SIZE D CODE CS NUMBER M8101-0-1 REV. D
SCALE NONE
SHEET 10 OF 10
DIST.

REVISIONS			
REV	CHANGE NO	CHK	DATE

DRAWING 40-523 10540
DEC FORM 140
CAD 88.0

1-0-1018W SOS 6

55

THIS DRAWING AND SPECIFICATIONS HEREIN ARE THE PROPERTY OF DIGITAL EQUIPMENT CORPORATION AND SHALL NOT BE REPRODUCED OR COPIED OR USED IN WHOLE OR IN PART AS THE BASIS FOR THE MANUFACTURE OR SALE OF ITEMS WITHOUT WRITTEN PERMISSION.
COPYRIGHT © 1974 DIGITAL EQUIPMENT CORPORATION

NOTES:

1. RESISTORS R1, R12 AND R14 ARE NOT USED.
2. INSTALL JUMPER W1 FOR USE WITH FP11-B

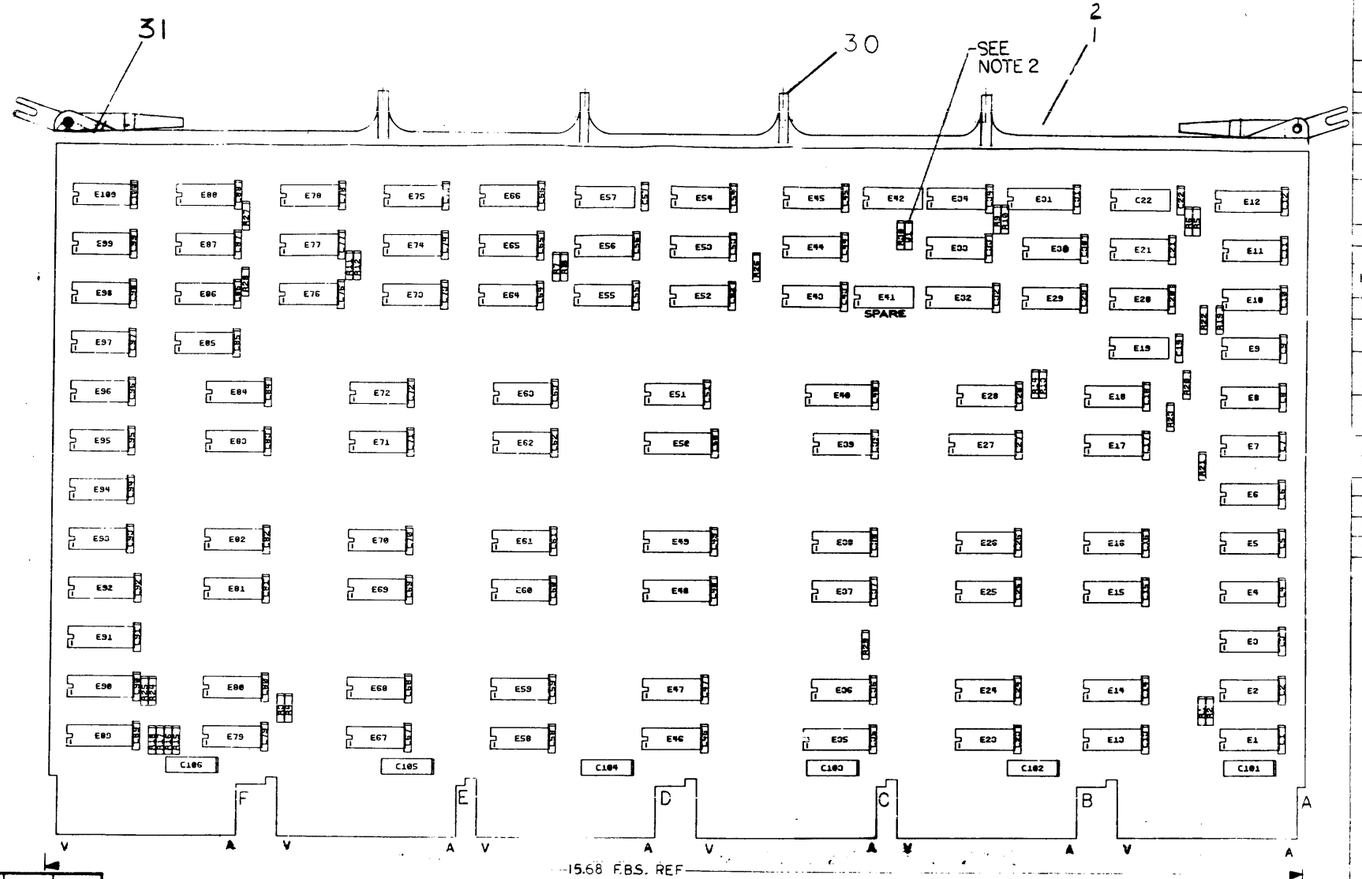

REF			
REF		X-Y COORDINATE HOLE LOCATION	K CO-M8132-0-4	1
REF		ASSY DRILLING HOLE LAYOUT	D-AH-M8132-0-5	2
REF		MODULE ECO HISTORY	B-MH-M8132-0-6	3
1		ETCHED CIRCUIT BOARD	5011394	4
6	C101 THRU C106	CAPACITOR, 6.8MFD, 35V 10%	1005306	5
98	C1 THRU C40, C43 THRU C100	CAPACITOR, .01MFD, 100V, 20% DISC	1001610-01	6
3	R2, R11, R13	RESISTOR, 150, 1/4W, 5%	1300250	7
4	R4, R5, R8, R9	RESISTOR, 330, 1/4W, 5%	1300295	8
10	R20 THRU R29	RESISTOR, 470, 1/4W, 5%	1300316	9
4	R3, R6, R7, R10	RESISTOR, 560, 1/4W, 5%	1301890	10
6	R15 THRU R19, R30	RESISTOR, 1K, 1/4W, 5%	1300365	11
12	E8, E11, E19, E21, E36, E37, E39, E52, E55, E62, E64, E93	I.C. DEC 74S00	1910532	12
1	E34	I.C. DEC 74S03	1910533	13
8	E3, E17, E30, E43, E88, E87, E97, E45	I.C. DEC 74S04	1910534	14
9	E28, E33, E39, E53, E58, E74, E95, E98, E100	I.C. DEC 74S10	1910536	15
16	E4, E6, E10, E22, E29, E46, E56, E59, E60, E71, E72, E75, E76, E78, E86, E99	I.C. DEC 74S11	1910537	16
6	E7, E9, E18, E87, E70, E96	I.C. DEC 74S20	1910539	17
1	E2	I.C. DEC 74S40	1910541	18
11	E1, E5, E51, E63, E77, E81, E82, E83, E84, E88, E42	I.C. DEC 74S64	1910542	19
5	E20, E54, E57, E65, E66	I.C. DEC 74S65	1910543	20
11	E13, E14, E15, E16, E23, E24, E25, E26, E73, E79, E94	I.C. DEC 74S74	1910544	21
4	E12, F31, E91, E92	I.C. DEC 74S153	1910547	22
2	E35, E40	I.C. DEC 74S157	1910548	23
3	E51, E80, E85	I.C. DEC 74H50	1909060	24
5	E27, E32, E48, E49, E50	I.C. DEC 8251-1	1909854	25
1	E47	I.C. DEC 8875	1910647	26
2	E44, E69	I.C. DEC 8885	1910649	27
1	E89	I.C. DEC 8598-AB	23C01A1	28
1	E90	I.C. DM 8598-AC	23C02A1	29
1		HANDLE MODULE	1210711-2	30
12		EYELET	9006732	31

QTY	REF DESIGNATION	DESCRIPTION	PART NO	ITEM NO

PARTS LIST

IC DEC 8598AC	8	16
IC DEC 74S197	8	16
IC DEC 74S183	8	16
IC DEC 8251-1	8	16
IC TYPE	GND	+5V

GND AND 5V ARE USUALLY PIN 7 AND 14 RESPECTIVELY EXCEPTIONS ARE STATED ABOVE

IC PIN LOCATIONS

AA2, BA2, CA2, AV1, BV1, CV1, DA2, EA2, FA2, DV1, EV1, FV1 — +5V

AC2, AC1, AH1, AN2, BC2, BT1, BH1, BN2, CC2, CT1, CH1, CN2, DC2, DT1, DH1, DN2, EC2, ET1, EH1, EN2, FC2, FT1, FH1, FN2

C101 THRU C106 6.8 μf

C1-C40 & C43-C100 .01 μf

FIRST USED ON OPTION MODEL: 11/70

ETCH BOARD REV: B

REV	REVISIONS	CHANGE NO	DATE
A	M8132-00001	CHK	4-16-75
B	M8132-00002	A. HELENIUS	11-3-75
C	M8132-00003	A. HELENIUS	11/19/75

DEC NO / EIA NO / DEC NO / EIA NO

SEMICONDUCTOR CONVERSION CHART

DRN	J. Christensen	1-10-75
CHK'D	G. Swan	1-13-75
ENG	D. Jenkins	1-13-75
PROJ ENG	S. Jenkins	1-13-75
PROD	T. Hall	11-14-75

NEXT HIGHER ASSY: B-DD-KB11-B

SCALE:

SHEET 1 OF 9

digital EQUIPMENT CORPORATION

TITLE: IR DECODE & COND CODES (IRC)

SIZE	CODE	NUMBER	REV
D	CS	M8132-3-1	C

DIST:

DCS M8132-3-1 C

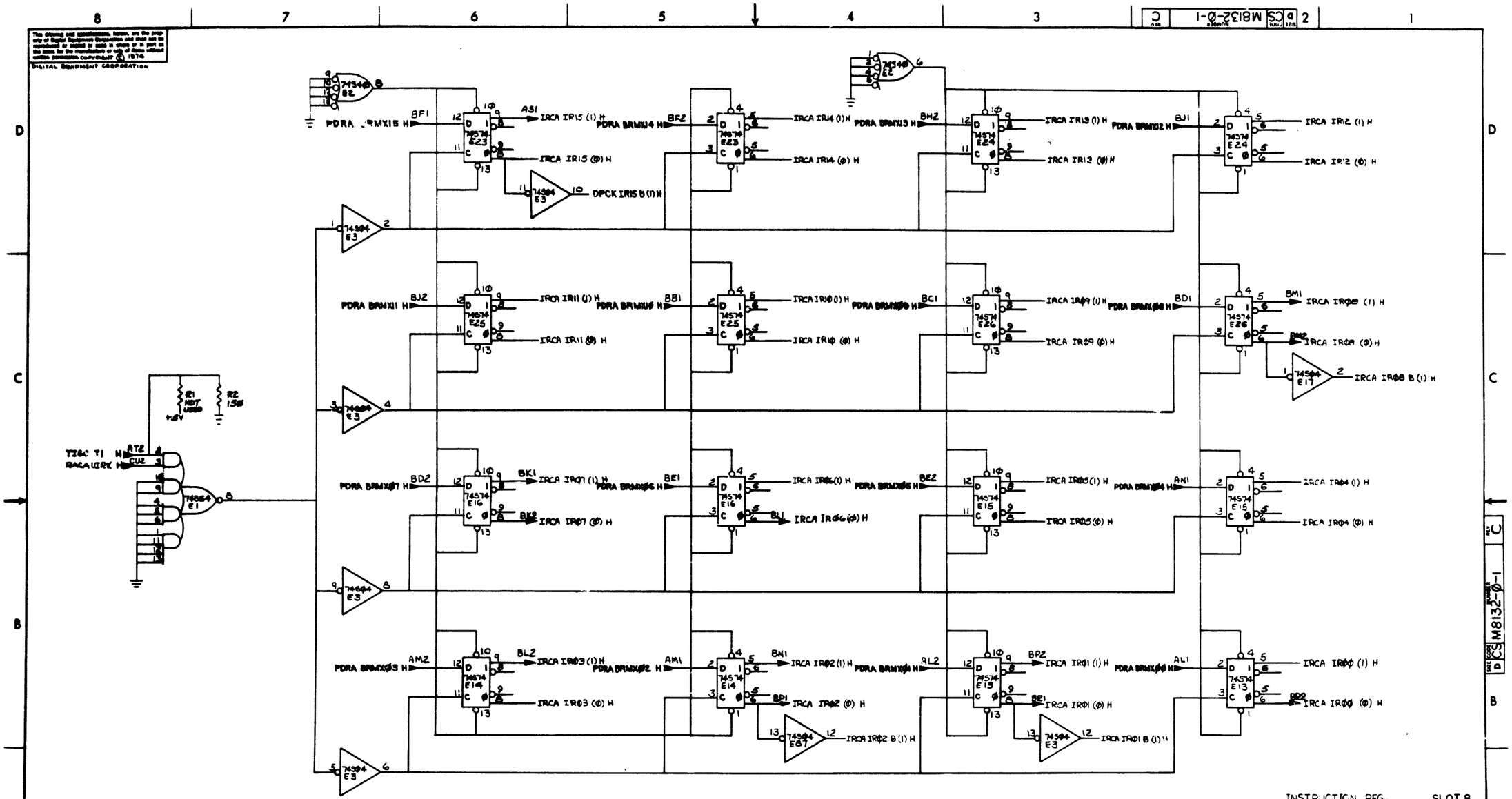

PDRA BRMX15 H
BF1
AS1
IRCA IR15 (1) H
IRCA IR15 (Ø) H
DPCK IR15 B (1) H
PDRA BRMX14 H
BF2
IRCA IR14 (1) H
IRCA IR14 (Ø) H
PDRA BRMX13 H
BH2
IRCA IR13 (1) H
IRCA IR13 (Ø) H
PDRA BRMX12 H
BJ1
IRCA IR12 (1) H
IRCA IR12 (Ø) H
PDRA BRMX11 H
BJ2
IRCA IR11 (1) H
IRCA IR11 (Ø) H
PDRA BRMX10 H
BB1
IRCA IR10 (1) H
IRCA IR10 (Ø) H
PDRA BRMX09 H
BC1
IRCA IR09 (1) H
IRCA IR09 (Ø) H
PDRA BRMX08 H
BD1
BM1
IRCA IR08 (1) H
BM2
IRCA IR08 (Ø) H
IRCA IR08 B (1) H
PDRA BRMX07 H
BD2
BK1
IRCA IR07 (1) H
BK2
IRCA IR07 (Ø) H
PDRA BRMX06 H
BE1
IRCA IR06 (1) H
BL1
IRCA IR06 (Ø) H
PDRA BRMX05 H
BE2
IRCA IR05 (1) H
IRCA IR05 (Ø) H
PDRA BRMX04 H
AN1
IRCA IR04 (1) H
IRCA IR04 (Ø) H
PDRA BRMX03 H
AM2
BL2
IRCA IR03 (1) H
IRCA IR03 (Ø) H
PDRA BRMX02 H
AM1
BN1
IRCA IR02 (1) H
BP1
IRCA IR02 (Ø) H
IRCA IR02 B (1) H
PDRA BRMX01 H
AL2
BP2
IRCA IR01 (1) H
BE1
IRCA IR01 (Ø) H
IRCA IR01 B (1) H
PDRA BRMX00 H
AL1
IRCA IR00 (1) H
BP2
IRCA IR00 (Ø) H
TISC T1 H
AT2
RACA UIRK H
CU2
R1 NOT USED
R2 150
+5V
74S04 E1
74S04 E2
74S04 E3
74S04 E7
74S04 E8
74S04 E17
74S74 E23
74S74 E24
74S74 E25
74S74 E26
74S74 E16
74S74 E15
74S74 E14
74S74 E13
INSTRUCTION REG.
SLOT 8
FIRST USED ON OPTION/MODEL
11/70
QTY.
DESCRIPTION
PART NO.
ITEM NO.
PARTS LIST
UNLESS OTHERWISE SPECIFIED DIMENSION IN INCHES
TOLERANCES
DECIMALS
ANGLES
XXX = .005
XX = .02
X = 1
±0° 30'
REMOVE BURRS AND BREAK SHARP CORNERS SURFACE QUALITY
MATERIAL
FINISH
DRN.
DATE 11-12-74
CHK'D
DATE 12-2-74
ENG
DATE 1-13-75
PROJ. ENG
DATE 1-13-75
PROD
DATE 1/18/75
NEXT HIGHER ASSY.
SCALE
SHEET 2 OF 9
digital EQUIPMENT CORPORATION
MAYNARD MASSACHUSETTS
TITLE
IR DECODE & COND. CODES
(IRCA)
SIZE D
CODE CS
NUMBER M8132-Ø-1
REV. C
DIST.
REVISIONS
CHANGE NO.
REV

This document contains ... property of ... and shall not be reproduced ... without the express written consent of ... DIGITAL EQUIPMENT CORPORATION
© 1974

IRCA IR Ø6 (1) H
IRCA IR Ø7 (1) H
IRCA IR Ø8 (1) H
8251-1 E49
IRCB IR (8:6) ØL
IRCB IR (8:6) 1L
IRCB IR (8:6) 2L
IRCB IR (8:6) 3L
IRCB IR (5:4) 4L
IRCB IR (8:6) 6L
CM2
IRCB SRCF 7 L

IRCA IR09 (1) H
IRCA IR10 (1) H
IRCA IR11 (1) H
8251-1 E50
IRCB IR (14:9) Ø8L
IRCB IR (14:9) Ø4L
IRCB IR (14:9) Ø5L
IRCB IR (14:9) Ø6L

IRCA IR12 (1) H
IRCA IR13 (1) H
IRCA IR14 (1) H
8251-1 E48
IRCB IR (14:12) Ø L
IRCB IR (14:12) 1L
IRCB IR (14:12) 7 L

IRCA IR12 (Ø) H
IRCA IR13 (Ø) H
IRCA IR14 (Ø) H
74S10 E28
74S04 E17
IRCB IR (14:12) Ø H

IRCC ROM DEC ENA H
IRCH R (PART PCLASS) H
74S08 E37
IRCB PART PCLASS L

IRCB SWAB H
IRCA IR15 B (Ø) L
IRCB IR (14:9) Ø8 L
IRCB IR (8:6) 3L
8875 E47
74S04 E17
1Ø

CJ1
IRCB MOVB H
IRCA IR15 (1) L
IRCB IR (14:12) 1L
8885 E44
74S04 E48

IRCH R (ICLASS) H
74S08 E36
CJ2
IRCB ICLASS L

IRCA +3V H
IRCC ROM DEC ENA H
IRCH R (KCLASS) H
74S11 E46
IRCB IR (14:12) 7 H
IRCA IR15 B (1) H
IRCB F CLASS H

IRCB K CLASS H
8885 E44

IRCA IR15 B (Ø) L
IRCB IR (14:9) Ø8L
IRCB IR (14:9) Ø4L
74S64 E63
IRCB IR (8:6) 1 L

8885 E44
CL1
IRCB FJ CLASS L
IRCB JMP+JSR H

IRCC ROM DEC ENA H
IRCH R (MUL:ASHC+MFP) H
74S08 E37
IRCB (MUL:ASHC)+MFP L

IRCB IR (14:12) Ø H
IRCC IR (11:9) 6 H
IRCA IR15 B (1) H
GRAB OBD (1) H
74S11 E64
74S10 E38
CK1
CK2
IRCB OBD (ASRB+RORB) L

IRCB IR (8:6) ØL
IRCB IR (8:6) 2 L
74S08 E36
IRCB IR (8:6) Ø+2 H

IRCB PART PCLASS L
74S10 E38
CL2
IRCB FCLASS H

IRCB NEG.B L
IRCB OBD (ASRB+RORB) L
74S08 E38
IRCA IR10 (1) H
74S08 E36
IRCB IR (14:7) 7L
IRCB IR (8:6) Ø+2 H
74S08 E36

IRCA IR09 (1) L
IRCA IR11 (1) L
IRCD +3V H
BFORK MUX 74S157 E35
SØ STB
CM1 IRCB BØ RABØ2 L
CM2 IRCB BØ RABØ1 L
CM1 IRCB BØ RABØ2 L
CS2 IRCB BØ RABØ4 L

IRCB IR (8:6) 4 L
IRCB IR (14:9) Ø5 L
8885 E44
74S04 E43
CP1 IRCB NEG.A L
IRCB NEG.B H
74S51 E46
CP2 IRCB BØ RABØ3 L

IRCB IR (14:9) Ø4 L
74HS8 E51
CR2 IRCB BI RAI ØØ L

74S157 SØ

	L	A → F
STB = L	H	B → F
STB = H	X	F = L

PCLASS = (CLR+B : MSL+B) * - TST.B + SWAB + SXT + XOR + MOVB + BIT.B + BIS.B + ADD + SUB
KCLASS = CMP.B + BIT.B + TST.B
ICLASS = CMP.B + BIT.B + TST.B + MUL + DIV + MFP
FJCLASS = FCLASS + JMP + JSR
OBD = ODD BYTE, DESTINATION

BFORK; IR DECODERS — SLOT 8

FIRST USED ON OPTION/MODEL	QTY.	DESCRIPTION	PART NO.	ITEM NO.
11/70		PARTS LIST		

UNLESS OTHERWISE SPECIFIED DIMENSION IN INCHES. TOLERANCES
DECIMALS: XXX ± .005, XX ± .02, X ± 1 — ANGLES: ±0° 30'
REMOVE BURRS AND BREAK SHARP CORNERS SURFACE QUALITY ✓
MATERIAL — FINISH

DRN.	[illegible] Kelly	DATE 11-12-74
CHK'D	[illegible]	DATE 12-2-74
ENG.	J. Jenkins	DATE 1-13-75
PROGRAMMING	J. Jenkins	DATE 1-13-75
PROJ.	R. Taylor	DATE 1/10/75

digital EQUIPMENT CORPORATION MAYNARD MASSACHUSETTS

TITLE: IR DECODE & COND. CODES (IRCB)
NEXT HIGHER ASSY.
SIZE D | CODE CS | NUMBER M8132-Ø-1 | REV. C
SCALE — SHEET 3 OF 9 — DIST.

REVISIONS	REV.	CHANGE NO.	CHK.

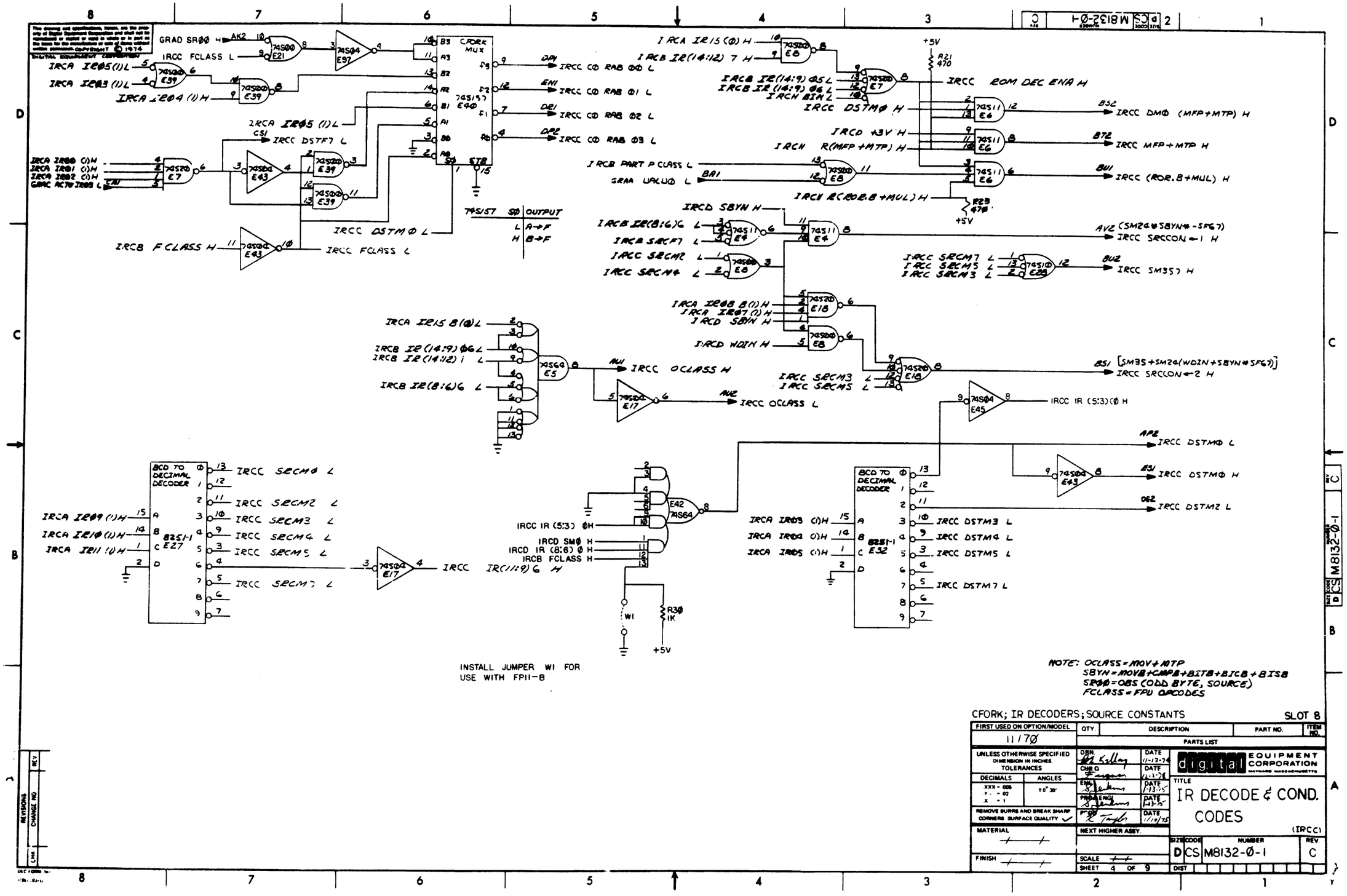

CFORK MUX
74S157 E40
74S157 S0 OUTPUT
L A→F
H B→F
BCD TO DECIMAL DECODER
8251-1 E27
8251-1 E32
74S64 E5
74S64 E42
74S00 E21
74S04 E97
74S20 E7
74S04 E43
74S00 E39
74S00 E8
74S11 E6
74S11 E4
74S10 E28
74S20 E18
74S04 E45
74S04 E17
74S04 E43
74S00 E8
IRCC ROM DEC ENA H
IRCC DM0 (MFP+MTP) H
IRCC MFP+MTP H
IRCC (ROR.B+MUL) H
IRCC SRCCON←1 H
IRCC SM357 H
IRCC SRCCON←2 H
IRCC OCLASS H
IRCC OCLASS L
IRCC IR (5:3) 0 H
IRCC DSTM0 L
IRCC DSTM0 H
IRCC DSTM2 L
IRCC DSTM3 L
IRCC DSTM4 L
IRCC DSTM5 L
IRCC DSTM7 L
IRCC IR(11:9) 6 H
IRCC IR (5:3) 0H
IRCD IR (8:6) 0 H
IRCB FCLASS H
IRCC SRCM0 L
IRCC SRCM2 L
IRCC SRCM3 L
IRCC SRCM4 L
IRCC SRCM5 L
IRCC SRCM7 L
IRCC DSTF7 L
IRCC DSTM0 L
IRCB FCLASS H
IRCC FCLASS L
IRCC CO RAB 00 L
IRCC CO RAB 01 L
IRCC CO RAB 02 L
IRCC CO RAB 03 L
IRCB PART P CLASS L
IRCC SRCM7 L
IRCC SRCM5 L
IRCC SRCM3 L
IRCC SRCM4 L
IRCC SRCM2 L
IRCC SRCM0 L
IRCC SRCM3 L
IRCC SRCM5 L
IRCC SRCM7 L
IRCC DSTM0 L
IRCC DSTM0 H
IRCC DSTM2 L
IRCC DSTM3 L
IRCC DSTM4 L
IRCC DSTM5 L
IRCC DSTM7 L
IRCC IR (5:3) 0 H
IRCC IR (8:6) 0 H
IRCB FCLASS H
IRCC IR(11:9) 6 H
IRCA IR05 (1) L
IRCA IR03 (1) L
IRCA IR04 (1) H
IRCA IR00 (1) H
IRCA IR01 (1) H
IRCA IR02 (1) H
GRAC AC70 IR03 L
GRAD SR00 H
IRCC FCLASS L
IRCA IR15 (0) H
IRCB IR(14:12) 7 H
IRCB IR(14:9) 05 L
IRCB IR(14:9) 06 L
IRCH BIN L
IRCD +3V H
IRCH R(MFP+MTP) H
IRCH R(ROR.B+MUL) H
IRCD SBYN H
IRCB IR(8:6) 6 L
IRCB SRCF7 L
IRCC SRCM2 L
IRCC SRCM4 L
IRCA IR08 B (1) H
IRCA IR07 (1) H
IRCD SBYN H
IRCD WDIN H
IRCC SRCM3 L
IRCC SRCM5 L
IRCA IR15 B (0) L
IRCB IR(14:9) 06 L
IRCB IR(14:12) 1 L
IRCB IR(8:6) 6 L
IRCA IR09 (1) H
IRCA IR10 (1) H
IRCA IR11 (1) H
IRCA IR03 (1) H
IRCA IR04 (1) H
IRCA IR05 (1) H
+5V
R21 470
R23 470
R30 1K
W1
INSTALL JUMPER W1 FOR USE WITH FP11-B
NOTE: OCLASS=MOV+MTP
SBYN=MOVB+CMPB+BITB+BICB+BISB
SR00=OBS (ODD BYTE, SOURCE)
FCLASS=FPU OPCODES
CFORK; IR DECODERS; SOURCE CONSTANTS
SLOT 8
FIRST USED ON OPTION/MODEL
11/70
QTY.
DESCRIPTION
PART NO.
ITEM NO.
PARTS LIST
UNLESS OTHERWISE SPECIFIED DIMENSION IN INCHES TOLERANCES
DECIMALS
ANGLES
±0° 30'
REMOVE BURRS AND BREAK SHARP CORNERS SURFACE QUALITY
MATERIAL
FINISH
NEXT HIGHER ASSY.
SCALE
SHEET 4 OF 9
DRN.
CHKD
ENG
PROJ ENG
PROD
DATE
digital EQUIPMENT CORPORATION
MAYNARD MASSACHUSETTS
TITLE
IR DECODE & COND. CODES
(IRCC)
SIZE D
CODE CS
NUMBER M8132-0-1
REV. C
DIST
REVISIONS
CHANGE NO
REV

59

This drawing and specifications, herein, are the property of Digital Equipment Corporation and loaned subject to agreement or request; and neither it or its contents are to be used for manufacturing or sale of devices without written permission. COPYRIGHT © 1974
DIGITAL EQUIPMENT CORPORATION

IRCC DSTM3 L
IRCC DSTM5 L
IRCC DSTM7 L
74S1Ø E28 → DD2 → IRCD DM357 H

IRCB MOVB L
IRCD BYINA H
74S00 E62 → DE1 → IRCD BYIN*(-MOVB)L

IRCB IR(14:12)Ø H
IRCC IR(11:9) 6 H
IRCA IRØ8 B (1) H
IRCA IR15 (1) H
74S20 E7Ø, 74S11 E59

IRCA IR15 B(Ø)L
IRCA IR14 (1) H
IRCA IR13 (1) H
IRCA IR12 (Ø) H
74S1Ø E58, 74S00 E62 → IRCD WDIN H

IRCC FCLASS L
74S11 E72 → DF2 → IRCD BYIN H

IRCB IR(14:9)Ø5 L
74S11 E71, 74S11 E72 → IRCD SBYN H

IRCB IR(14:9)Ø6 L
IRCA IR15 (1) H
74S11 E72 → IRCD BYINA H

IRCD BYINA H
IRCD DSTF67 H
IRCC DSTM2 L
IRCC DSTM4 L
74H3Ø E51, 74S11 E71 → DK1 → IRCD DSTCON←1 H
DM24 * BYIN* (-DF67)

74S14 E43 → IRCD +3V H

IRCA IRØ2(1) H
IRCD +3V H
IRCA IRØ1(1) H
74S11 E29 → IRCD DSTF67 H

IRCC DSTM3 L
IRCC DSTM5 L
IRCD WDIN H
74S00 E62

IRCD BYINA H
IRCC DSTM2 L
74S00 E62

IRCC DSTM4 L
(DDI)
FXPE AD2 H
IRCB FCLASS H
74S64 E61, 74S04 E68 → DJ2 → IRCD DSTCON←2 H
DM35 + (FCLASS * ADT * AD2) + DM2 * [WDIN + (BYIN * DF67)]

IRCD SMØ H
IRCC SRCMØ L
74S04 E68

IRCB IR(8:6)Ø L
74S04 E68

IRCD IR (8:6) ØH
IRCB IR(14:12)Ø H
74S11 E59

IRCD DSTM24 H

DB1
FXPE AD1 H
74S04 E68

IRCB FCLASS H
IRCC DSTF7 L
IRCD DSTM24 H
74S2Ø E7Ø

8885 E69 → DJ1 → IRCD DSTCON←4 H
(-AD2) * (AD1) * FCLASS * DM24 * (-DF7)

DD1
FXPE AD2 H
74S04 E68

8885 E69 → DH2 → IRCD DSTCON←1Ø H
(-AD2) * (-AD1) * FCLASS * DM24 * (-DF7)

IRCA IRØ8 (Ø) H
TMCB TRAP INH L
IRCB IR(14:9)Ø4 L
IRCA IRØ8 B(1) H
IRCA IR15(1) H
74S04 E68, 74S2Ø E67, 74S2Ø E67 → DM1 → IRCD EMT L
DK2 → BV2 → IRCD TRAP L

IRCA IRØ2 (Ø) H
IRCA IRØ1 B(1) H
IRCA IRØØ (1) H
74S11 E6Ø → DL1 → IRCD OPCODE3 L

IRCA IRØ2 B(1) H
IRCA IRØ1 (Ø) H
IRCA IRØØ (Ø) H
74S11 E6Ø, 74S1Ø E58 → DM2 → IRCD IOT L

IRCA IR15 (Ø) H
IRCC DSTMØ H
74S11 E59

IRCA IRØ2 B(1) H
IRCA IRØ1 B(1) H
IRCA IRØØ (Ø) H
74S11 E6Ø, 74S11 E6Ø, 74S00 E37 → DN1 → IRCD RTT L
DC1 → IRCD DSTFG H

INSTRUCTION TRAPS & DESTINATION CONSTANTS — SLOT 8

FIRST USED ON OPTION/MODEL	QTY.	DESCRIPTION	PART NO.	ITEM NO.
11/70		PARTS LIST		

UNLESS OTHERWISE SPECIFIED DIMENSION IN INCHES. TOLERANCES
DECIMALS: XXX ± .005, XX ± .02, X ± 1 — ANGLES: ±0° 30'
REMOVE BURRS AND BREAK SHARP CORNERS SURFACE QUALITY ✓
MATERIAL — FINISH — NEXT HIGHER ASSY.

		DATE
DRN.	Ed Kelley	11-12-74
QUAL.	Tom Lawson	11-27-74
ENGR.	Mike Stein	1-13-75
PROJ. ENGR.	Sam Fuller	1-13-75
PROJ.	Lee Taylor	1/14/75

digital EQUIPMENT CORPORATION MAYNARD MASSACHUSETTS

TITLE: IR DECODE & COND. CODES (IRCD)

SIZE D | CODE CS | NUMBER M8132-Ø-1 | REV. C | SCALE — | SHEET 5 OF 9 | DIST.

REVISIONS | REV | CHANGE NO | CHK

60

This drawing and specifications, herein, are the property of Digital Equipment Corporation and shall not be reproduced or copied or used in whole or in part as the basis for the manufacture or sale of items without written permission. COPYRIGHT © 1974
DIGITAL EQUIPMENT CORPORATION

IRCE VEN 2 L
IRCF CCLD 5L
DAPD AMX 15 H
GRAA OB SWAP L
DAPB AMX Ø Ø H
DAPC AMX Ø7 H
IRCH VMOD Ø H
GRAA WORD+OB SWAP L
IRCF CCLD 5 L
IRCH SWAB L
IRCH VMOD 1 H
IRCF CC INSDEP H
IRCH ENV H
IRCE VEN 2 L
IRCE VEN 1 L
DAPC BMX Ø7 H
IRCH VMOD 1 H
IRCH +3V H
DAPD BMX 15 H
IRCD BYINA H
IRCH VMOD Ø H
IRCE WOB CARRY H
DAPJ SHFRA15 H
IRCE LOB CARRY H
DAPJ SHFRA Ø7 H
GRAA WORD+OB SWAP H
IRCH V(1) H
IRCE LOAD FCC L
IRCE PS LOAD L
IRCE CC←BR H
DAPA BR Ø1 H
IRCF MUL+DIV NZVEN H
IRCF SET V H
IRCF CC NONAFF L
IRCF CCLD 5 L
IRCF CCLD 67 L
DAPJ ALU SIGN H
DAPJ AMX SIGN H
IRCF CC FP LOAD L
FXPE FCLD EN L
IRCB FCLASS H
RACB UIBS Ø1 H
RACB UIBS Ø Ø H
R3 540 +5V
R9 330 +5V
R22 470 +5V
R23 470 +5V
R5 330 15V
R6 360
IRCE V DATA L
IRCD BYINA H
IRCF NENI H
IRCD WDIN H
IRCH SWAB L
IRCH MODEN H
IRCD WDIN H
AJZ
IRCE EN HIB H
AKI
IRCE EN LOB H
IRCF CCLD Ø L
IRCF CCLD 5 L
CEI
IRCE EN WORD H
IRCE LOAD FCC L
IRCE CC←BR H
IRCE PS LOAD L

745153	S1	S0	
STB L	L	L	A→F
	L	H	B→F
	H	L	C→F
	H	H	D→F
STB H	X	X	Z = L

CONDITION CODE V LOGIC SLOT 8

FIRST USED ON OPTION/MODEL	QTY.	DESCRIPTION	PART NO.	ITEM NO.
11/70		PARTS LIST		

UNLESS OTHERWISE SPECIFIED DIMENSION IN INCHES TOLERANCES
DECIMALS: XXX ± .005, XX ± .02, X ± .1 — ANGLES: ±0° 30'
REMOVE BURRS AND BREAK SHARP CORNERS SURFACE QUALITY ✓
MATERIAL
FINISH

DRN K. Killey 11-12-74
CHKD [illegible] 11-27-74
ENGR [illegible] 1-13-75
PROJ MGR [illegible] 1-13-75
PROGR R. Taylor 1/14/75
NEXT HIGHER ASSY.

digital EQUIPMENT CORPORATION

TITLE
IR DECODE & COND CODES
(IRCE)

SIZE	CODE	NUMBER	REV.
D	CS	M8132-Ø-1	C

SCALE
SHEET 6 OF 9
DIST.

REVISIONS	REV.
CHANGE NO.	
CHK	

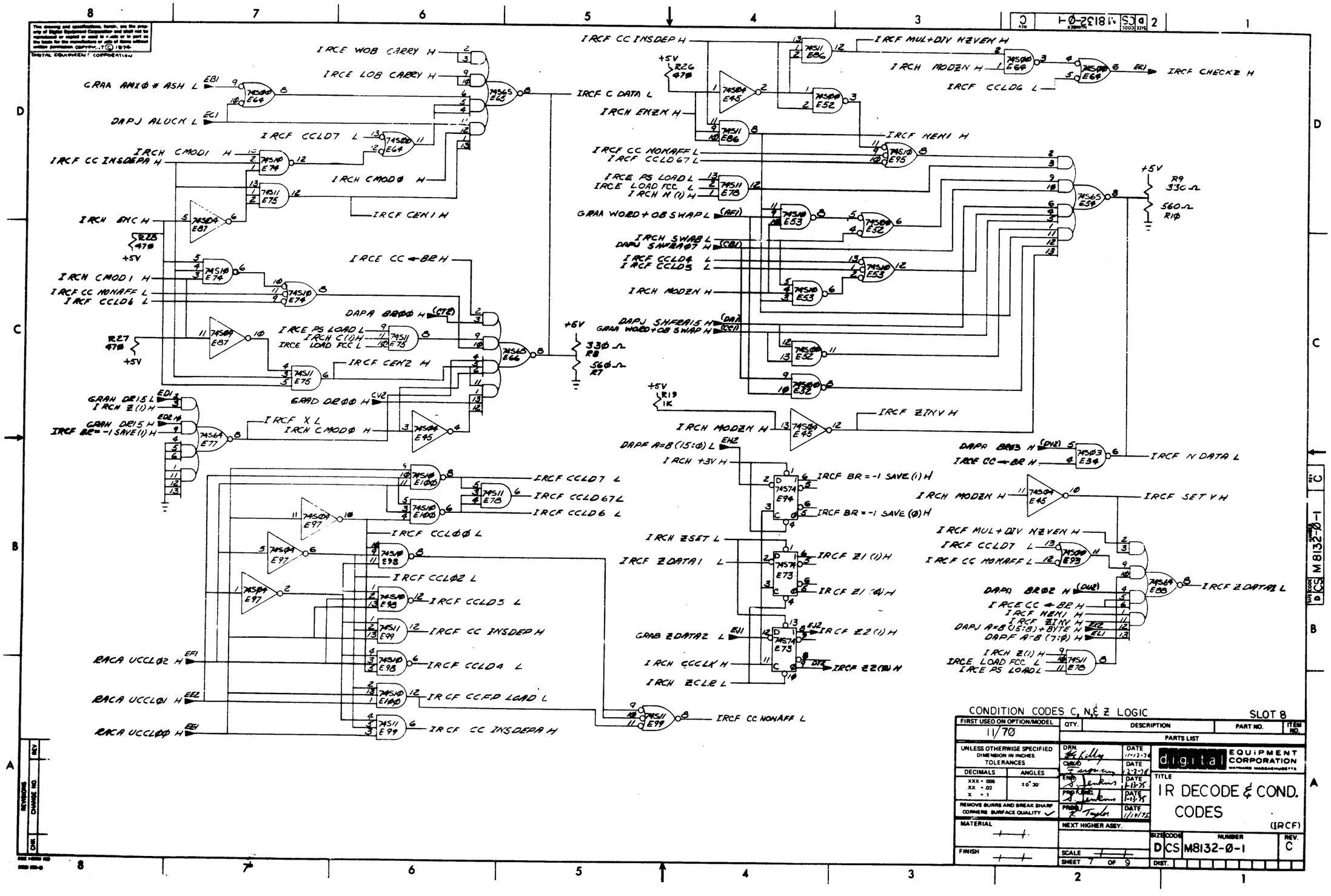

IRCE WOB CARRY H
IRCE LOB CARRY H
GRAA AMXØ * ASH L
DAPJ ALUCK L
IRCF CCLD7 L
IRCH CMOD1 H
IRCF CC INSDEPA H
IRCH CMODØ H
IRCF CEN1 H
IRCH ENC H
IRCE CC ← BR H
IRCH CMOD1 H
IRCF CC NONAFF L
IRCF CCLD6 L
DAPA BRØØ H
IRCE PS LOAD L
IRCH C(1) H
IRCE LOAD FCC L
IRCF CEN2 H
GRAD DRØØ H
GRAH DR15 L
IRCH Z(1) H
GRAH DR15 H
IRCF BR = -1 SAVE (1) H
IRCF X L
IRCH CMODØ H
IRCF CCLD7 L
IRCF CCLD67 L
IRCF CCLD6 L
IRCF CCLØØ L
IRCF CCLØ2 L
IRCF CCLD5 L
IRCF CC INSDEP H
IRCF CCLD4 L
IRCF CCFP LOAD L
IRCF CC INSDEPA H
RACA UCCLØ2 H
RACA UCCLØ1 H
RACA UCCLØØ H
IRCF CC NONAFF L
IRCF CC INSDEP H
IRCF C DATA L
IRCH ENZN H
IRCF MUL+DIV NZVEN H
IRCH MODZN H
IRCF CCLD6 L
IRCF CHECKZ H
IRCF NEN1 H
IRCF CC NONAFF L
IRCF CCLD67 L
IRCE PS LOAD L
IRCE LOAD FCC L
IRCH N(1) H
GRAA WORD + OB SWAP L
IRCH SWAB L
DAPJ SHFRAØ7 H
IRCF CCLD4 L
IRCF CCLD5 L
IRCH MODZN H
DAPJ SHFRA15 H
GRAA WORD + OB SWAP H
IRCF ZINV H
IRCH MODZN H
DAPF A=B (15:Ø) L
IRCH +3V H
IRCF BR = -1 SAVE (1) H
IRCF BR = -1 SAVE (Ø) H
IRCH ZSET L
IRCF ZDATA1 L
IRCF Z1 (1) H
IRCF Z1 (Ø) H
GRAB ZDATA2 L
IRCF Z2 (1) H
IRCH CCCLK H
IRCF Z2 (Ø) H
IRCH ZCLR L
DAPA BRØ3 H
IRCE CC ← BR H
IRCF N DATA L
IRCH MODZN H
IRCF SET V H
IRCF MUL + DIV NZVEN H
IRCF CCLD7 L
IRCF CC NONAFF L
DAPA BRØ2 H
IRCE CC ← BR H
IRCF NEN1 H
IRCF ZINV H
DAPJ A=B (15:8) + BYTE H
DAPF A=B (7:Ø) H
IRCH Z(1) H
IRCE LOAD FCC L
IRCE PS LOAD L
IRCF ZDATA1 L
+5V
R9 330 Ω
560 Ω R1Ø
R8 330 Ω
R7 560 Ω
R26 47Ø
R27 47Ø
R19 1K
CONDITION CODES C, N, & Z LOGIC
SLOT 8
FIRST USED ON OPTION/MODEL
11/7Ø
QTY.
DESCRIPTION
PART NO.
ITEM NO.
PARTS LIST
UNLESS OTHERWISE SPECIFIED DIMENSION IN INCHES TOLERANCES
DECIMALS
ANGLES
REMOVE BURRS AND BREAK SHARP CORNERS SURFACE QUALITY
MATERIAL
FINISH
NEXT HIGHER ASSY.
SCALE
SHEET 7 OF 9
digital EQUIPMENT CORPORATION
TITLE
IR DECODE & COND. CODES
(IRCF)
SIZE D
CODE CS
NUMBER M8132-Ø-1
REV. C
DIST.

62

This drawing and specifications, herein, are the property of Digital Equipment Corporation and shall not be reproduced or copied or used in whole or in part as the basis for the manufacture or sale of equipment without written permission. COPYRIGHT © 1974 DIGITAL EQUIPMENT CORPORATION

IRCH SETCC H
IRCA IRØ3 (1) H
DAPA BRØ3 H
UBCB CC DATA (1) H
74H58 E85
DV2
ER2
IRCA IRØ2 B(1) H
DAPA BRØ2 H
74H58 E85
DU2
IRCH Z SET L
IRCA IRØ1 B(1) H
DAPA BRØ1 H
74H58 E84
CU1
IRCA IRØØ(1) H
DAPA BRØØ H
74H58 E80
CT2
IRCF NDATA L
IRCE VDATA L
IRCF CDATA L
74S74 E94
FC1
IRCH N (1) H
IRCH N (Ø) H
FD1
IRCF Z1 (1) L
IRCF Z2 (1) L
IRCH Z (1) H
74S00 E93
FF2
1K R18
FB1
IRCH MAT Z H
74S04 E97
FH2
IRCH Z (Ø) H
1K R16
FF1
IRCH MAT V H
FJ1
IRCH V (1) H
FJ2
IRCH V (Ø) H
FK2
IRCH C (1) H
FE1
IRCH C (Ø) H
+5V
74S11 E76
IRCH CCCLK H
IRCH CLK INH L
GRAC GATE TG H
TSGC TF H
IRCH +3V H
UBCB INIT H
UBCB CCDATA (1) H
EM2
74S11 E76
PDRB BRØ3 B L
PDRB BRØ2 B L
PDRE BRØ1 B L
PDRB BRØØ B L
ES2
74S64 E84
74S64 E83
74S64 E82
74S64 E81
EF2
EU1
ET2
IRCA IRØ3 (1) H
IRCA IRØ2 B(1) H
IRCH Z CLR L
IRCA IRØ1 B(1) H
IRCA IRØØ(1) H
IRCA IRØ4 (1) H
IRCH SETCC H
IRCA IRØ4 (Ø) H
TIGD TRB H
DAE
74S11 E29
IRCF CCLØØ L
IRCA UCCLØ1 H
IRCF CCLØ1 L
74S11 E86
74S04 E87
IRCH CLK INH L
IRCH N (1) L
74S04 E87
R17 1K
FK1
IRCH MAT N H
FM1
IRCH N B (1) H
IRCA IR15 (1) H
IRCA IR14 (1) H
IRCA IR13 (1) H
IRCA IR12 (Ø) H
74S20 E96
IRCH SUB L
74S04 E97
IRCH C (1) L
74S04 E87
R18 1K
FL1
IRCH MAT C H
FL2
IRCH C B (1) H
74S04 E95
IRCH +3V H
IRCA IRØ7 (1) H
IRCA IR1Ø (1) H
IRCA IR13 (1) H
STB1 STBØ
74S153 E92
FI
IRCA IRØ6 (1) H
IRCA IRØ9 (1) H
IRCA IR12 (1) H
FØ
S1 SØ
IRCA IRØ9 (1) H
IRCH +3V H
74S153 E91
IRCA IRØ8 (1) H
IRCA IR11 (1) H
IRCA IR14 (1) H
IRCH BIN L
74S00 E93
IRCA IR14 (Ø) H
IRCA IR13 (Ø) H
IRCA IR12 (Ø) H
74S10 E95
74S00 E93
IRCA IR14 (1) H
IRCA IR13 (Ø) H
IRCA IR12 (1) H
74S10 E95
RACC UNLUØ H
RACC UNLU1 H
RACC UNLU2 H
74S11 E71
IRCA IR11 (Ø) H
IRCH BIN L
74S20 E96
ER1
IRCH SWAB L
CS DM8548 AC E90
M7 M6 M5 M4 M3 M2 M1 MØ
IRCH MODEN H
IRCH ENZN H
IRCH CMODI H
IRCH CMODØ H
IRCH ENC H
IRCH VMOD1 H
IRCH VMODØ H
IRCH ENV H
CS DM8548 AB E89
INSTR DECODE ROM
+5V R25 470
+5V R24 470
+5V R29 470
FM2
IRCH SXT H
FN1
IRCH DIV+ASHC H
IRCH R(ROR.B+MUL) H
IRCH R(MFP+MTP) H
IRCH R(MUL:ASHC+MFP) H
IRCH R(KCLASS) H
FP1
IRCH R(ICLASS) H
IRCH R(PART PCLASS) H
FR1
IRCH SUBROMA4 H
FR2
IRCH SUBROMA3 H
FS1
IRCH SUBROMA2 H
FS2
IRCH SUBROMA1 H
FT1
IRCH SUBROMAØ H

74S153	SI	SØ	
STB=L	L	L	A→F
	L	H	B→F
	H	L	C→F
	H	H	D→F
STB=H	X	X	F=L

COND. CODE BITS; CC CNTL & INSTR DECODE ROMS SLOT 8

FIRST USED ON OPTION/MODEL	QTY.	DESCRIPTION	PART NO.	ITEM NO.
11/70		PARTS LIST		

UNLESS OTHERWISE SPECIFIED DIMENSION IN INCHES. TOLERANCES
DECIMALS .XXX ± .005, .XX ± .02, .X ± .1; ANGLES ±0° 30'
REMOVE BURRS AND BREAK SHARP CORNERS SURFACE QUALITY ✓
MATERIAL
FINISH

DSN.		DATE 11-12-74
CHKD		DATE 11-12-74
ENGR		DATE 1-15-75
PROJ. MGR.		DATE 1-13-75
PROD. MGR.		DATE 1/19/75

NEXT HIGHER ASSY.
SCALE
SHEET 8 OF 9

digital EQUIPMENT CORPORATION MAYNARD MASSACHUSETTS

TITLE
IR DECODE & COND CODES
(IRCH)

SIZE	CODE	NUMBER	REV.
D	CS	M 8132-0-1	C

DIST.

REVISIONS — REV. — CHANGE NO. — DWN.

M 8132-0-1 REV C SHEET 8 OF 9

This drawing and specifications herein are the property of Digital Equipment Corporation and shall not be reproduced or copied or used in whole or in part as the basis for the manufacture or sale of items without written permission COPYRIGHT © 1974
DIGITAL EQUIPMENT CORPORATION

INSTRUCTION	OCTAL ADDRESS
RGR.B	00
RGL.B	01
ASR.B	02
ASL.B	03
MARK	04
MFP	05
MTP	06
SXT	07
CLR.B	10
COM.B	11
INC.B	12
DEC.B	13
NEG.B	14
ADC.B	15
SBC.B	16
TST.B	17
SUB	20
MOV.B	21
CMP.B	22
BIT.B	23
BIC.B	24
BIS.B	25
ADD	26
NOT USED	27
MUL	30
DIV	31
ASH	32
ASHC	33
XOR	34
NOT USED	35
NOT USED	36
SOB	37

INSTRUCTION DECODE ROM DM8598/AB

SXT	DIV*ASH	SOB.DFAIL	R(MFPMTP)	R(NUL ASHCMFP)	R(K CLASS)	R(I CLASS)	R(PART P CLASS)
M7	M6	M5	M4	M3	M2	M1	M0
L	L	X	L	L	L	L	H
L	L	L	L	L	L	L	H
L	L	L	L	L	L	L	H
L	L	L	L	L	L	L	H
L	L	L	L	L	L	L	L
L	L	L	H	H	L	H	L
L	L	L	H	L	L	L	L
H	L	L	L	L	L	L	H
L	L	L	L	L	L	L	H
L	L	L	L	L	L	L	H
L	L	L	L	L	L	L	H
L	L	L	L	L	L	L	H
L	L	L	L	L	L	L	H
L	L	L	L	L	L	L	H
L	L	L	L	L	L	L	H
L	L	L	L	L	L	H	H
L	L	L	L	L	L	H	H
L	L	L	L	L	L	L	L
L	L	L	L	L	L	L	H
L	L	L	L	L	L	L	H
L	L	L	L	L	L	L	H
L	L	L	L	L	L	L	H
L	L	H	L	H	L	H	L
L	H	L	L	H	L	H	L
L	L	L	L	H	L	L	L
L	H	L	L	H	L	L	L
L	L	L	L	L	L	L	H
L	L	L	L	L	L	L	L
L	L	L	L	L	L	L	L

COND. CODE CNTL. ROM DM8598/AC

MOD ZN	EN ZN	CMOD 1	CMOD 0	ENC	VMOD 1	VMOD 0	ENV
M7	M6	M5	M4	M3	M2	M1	M0
H	H	L	L	L	H	H	H
H	H	L	L	L	H	L	H
H	H	L	L	L	H	H	H
H	H	L	L	L	H	L	H
L	L	L	L	L	L	L	L
H	H	H	L	H	L	L	H
H	H	H	L	H	L	L	H
H	H	H	L	H	L	L	H
H	H	H	L	L	L	L	H
H	H	L	H	L	L	L	H
H	H	H	L	H	L	L	L
H	H	H	L	L	L	L	H
H	H	L	H	L	H	L	L
L	L	H	H	L	L	L	H
H	H	L	L	H	L	L	H
H	H	H	L	H	L	L	H
L	L	L	L	L	L	L	L
H	L	L	H	H	L	L	H
L	L	H	H	L	L	L	H
H	H	H	L	L	L	L	H
H	H	L	L	H	L	L	H
H	H	H	L	H	L	L	H
L	L	L	L	L	L	L	L
L	L	L	L	L	L	L	L
L	L	L	L	L	L	L	L

SWAB

CCLD4 (RACC UCCL(2:0)=4)
CCLD5 (RACC UCCL(2:0)=5)
CCLD6 (RACC UCCL(2:0)=6)
CCLD7 (RACC UCCL(2:0)=7)

INSTRUCTION DEPENDENT CONTROL (RACA UCCL(2:0)=1)

N		Z		V		C	
WORD+ ODD BYTE	BYTE *(EVEN + DSTMD)	WORD	BYTE	WORD	BYTE	WORD	BYTE
* SHFR(15)1	SHFR(7)1	SHFR(15:0)0	SHFR(7:0)0	SHFR15 ¥ AMX 0	SHFR7 ¥ AMX0	AMX0	
SHFR(15)1	SHFR(7)1	SHFR(15:0)0	SHFR(BYTE)0	SHFR15 ¥ AMX15	SHFR15 ¥ AMX7 / SHFR7 ¥ AMX7	AMX15	AMX7
* SHFR(15)1	SHFR(7)1	SHFR(15:0)0	SHFR(7:0)0	SHFR15 ¥ AMX0	SHFR7 ¥ AMX0	AMX0	
SHFR(15)1	SHFR(7)1	SHFR(15:0)0	SHFR(BYTE)0	SHFR15 ¥ AMX15	SHFR15 ¥ AMX7 / SHFR7 ¥ AMX7	AMX15	AMX7
NOT INSTR. DEP.		NOT INSTR. DEP.		NOT INSTR. DEP.		NOT INSRT. DEP.	
SHFR(15)1		SHFR(15:0)0		0		NOT AFFECTED	
SHFR(15)1		SHFR(15:0)0		0		NOT AFFECTED	
SHFR(15)1		SHFR(15:0)0		0		NOT AFFECTED	
SHFR(15)1	SHFR(7)1	SHFR(15:0)0	SHFR(BYTE)0	0		ALUCOUT 15	ALUCOUT 7
SHFR(15)1	SHFR(7)1	SHFR(15:0)0	SHFR(BYTE)0			ALUCOUT 15	ALUCOUT 7
SHFR(15)1	SHFR(7)1	SHFR(15:0)0	SHFR(BYTE)0	AMX15 • ALU15	AMX7 • ALU7	NOT AFFECTED	
SHFR(15)1	SHFR(7)1	SHFR(15:0)0	SHFR(BYTE)0	AMX15 • ALU15	AMX7 • ALU7	NOT AFFECTED	
* SHFR(15)1	SHFR(7)1	SHFR(15:0)0	SHFR(7:0)0	A15*B15*ALU15 + A15*B15*ALU15	A7*B7*ALU7 + A7*B7*ALU7	ALUCOUT 15	ALUCOUT 7
SHFR(15)1	SHFR(7)1	SHFR(15:0)0	SHFR(BYTE)0	AMX15 • ALU15	AMX7 • ALU7	ALUCOUT 15	ALUCOUT 7
SHFR (15)1	SHFR(7)1	SHFR(15:0)0	SHFR(BYTE)0	AMX15 • ALU15	AMX7 • ALU7	ALUCOUT 15	ALUCOUT 7
SHFR(15)1	SHFR(7)1	SHFR(15:0)0	SHFR(BYTE)0			ALUCOUT 15	ALUCOUT 7
SHFR(15)1		SHFR(15:0)0		AMX15*BMX15*ALU15 + AMX15*BMX15*ALU15		ALUCOUT 15	
SHFR(15)1	SHFR(7)1	SHFR(15:0)0	SHFR(BYTE)0	0		NOT AFFECTED	
SHFR(15)0	SHFR(7)0	A=B(15:0)	A=B(7:0)	A15*B15*ALU15 + A15*B15*ALU15	A7*B7*ALU7 + A7*B7*ALU7	ALUCOUT 15	ALUCOUT 7
SHFR(15)1	SHFR(7)1	SHFR(15:0)0	SHFR(BYTE)0	0		NOT AFFECTED	
SHFR(15)1	SHFR(7)1	SHFR(15:0)0	SHFR(BYTE)0	0		NOT AFFECTED	
SHFR(15)1	SHFR(7)1	SHFR(15:0)0	SHFR(BYTE)0	0		NOT AFFECTED	
SHFR(15)1		SHFR(15:0)0		AMX15*BMX15*ALU15 + AMX15*BMX15*ALU15		ALUCOUT 15	
NOT AFFECTED		Z(OLD) • SHFR(15:0)0		0		X	
NOT AFFECTED		1		1		1(ALUCN + ALUCN)	
SHFR(15)1		SHFR(15:0)0		0		AMX0	
SHFR(15)1		SHFR(15:0)0		0		DRB0	
SHFR(15)1		SHFR(15:0)0		0		NOT AFFECTED	
NOT INSTR. DEP		NOT INSTR. DEP.		NOT INSTR DEP.		NOT INSTR. DEP.	
SHFR(7)1		SHFR(7:0)0		0		0	
SHFR(15)1		SHFR(15:0)0		0		0	
SHFR(15)1		SHFR(15:0)0		Y(OLD) + (SHFR15 ¥ AMX15)		AMX15	
NOT AFFECTED		Z(OLD) • SHFR(15:0)0		NOT AFFECTED		NOT AFFECTED	
NOT AFFECTED		NOT AFFECTED		NOT AFFECTED		ALUOUT 15	

* ODD BYTE SWAPPED TO EVEN DURING COND. CODE CHECKING

NOTE: BYTE INSTRUCTION WITH DSTMD IS ALWAYS EVEN BYTE

X = Z(OLD)* $\overline{DR15}$ + (SR=0)*DR15

SWAB INSTR. HAS SAME ROM ADDRESS AS ASL.B

CC CNTL & INSTR DECODE ROM MAPS SLOT 8

FIRST USED ON OPTION/MODEL	QTY	DESCRIPTION	PART NO.	ITEM NO.
11/70		PARTS LIST		

UNLESS OTHERWISE SPECIFIED DIMENSION IN INCHES TOLERANCES
DECIMALS: XXX ± .005, XX ± .02, X ± .1; ANGLES: ± 0 30'
REMOVE BURRS AND BREAK SHARP CORNERS. SURFACE QUALITY ✓
MATERIAL —
FINISH —

DRN [illegible] DATE 11-12-74
DES [illegible] DATE 11-26-74
ENG [illegible] DATE 1-13-75
PROGRAMMING [illegible] DATE 1-13-75
PROJ [illegible] DATE 1/14/75

NEXT HIGHER ASSY
SCALE NONE
SHEET 9 OF 9

digital EQUIPMENT CORPORATION MAYNARD MASSACHUSETTS

TITLE: IR DECODE & COND. CODES (IRCJ)

SIZE D | CODE DCS | NUMBER M8132-0-1 | REV C | DIST

REVISIONS: REV | CHANGE NO | CHK

BRUNING 40 522 13840 DEC FORM NO DIRD 100-B

64

NOTES: 1. UNLESS OTHERWISE NOTED, RESISTANCE IS IN OHMS, CAPACITANCE IS IN MICROFARADS, CAPACITORS ARE 10% 50V CERAMIC DISC UNLESS OTHERWISE NOTED.
2. FOR EDGE CONNECTOR SIGNALS.
3. FOR LOCATIONS.
4. R5, R7, R9, R12 & R13 ARE NOT USED.

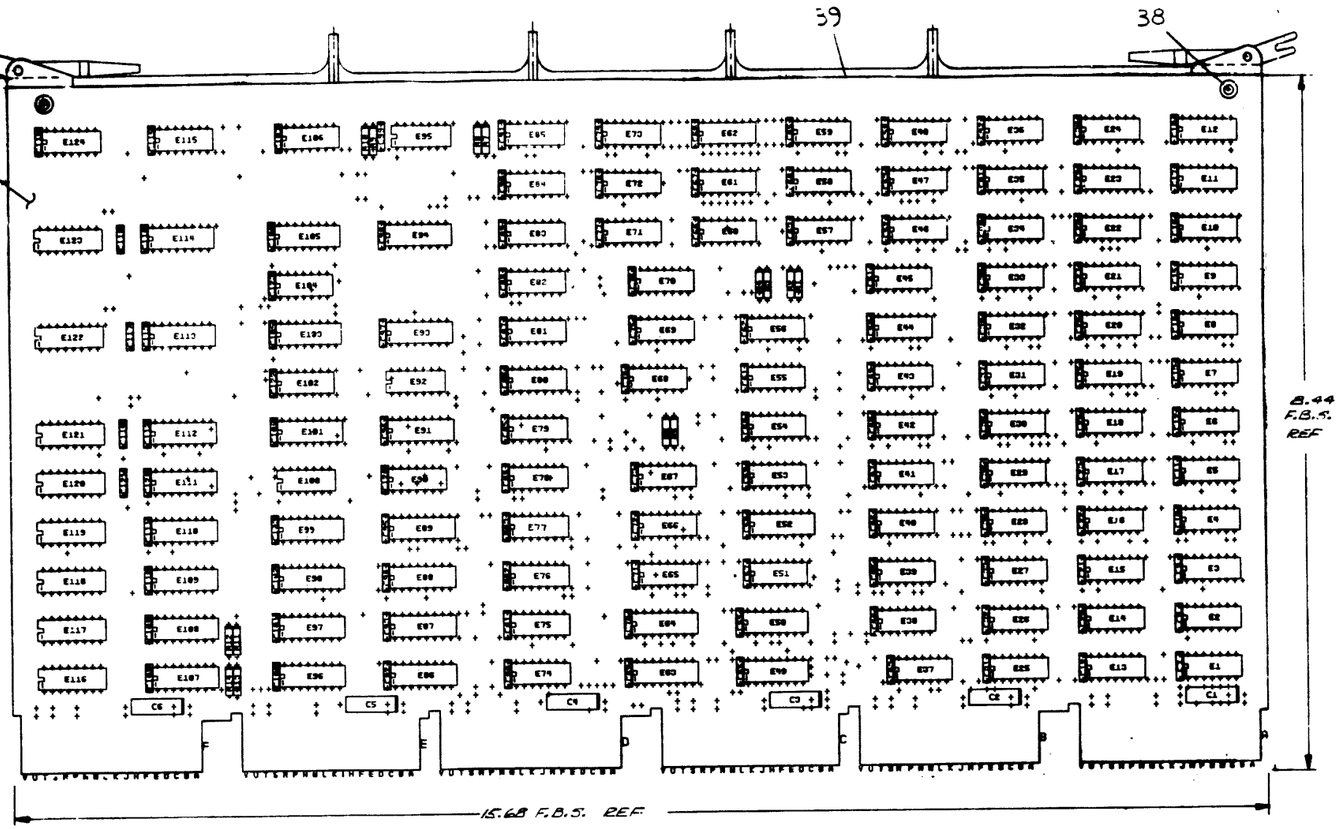

REF				
REF		X-Y COORDINATE HOLE LOCATION	K-CO-M8123-0-4	1
REF		ASSY DRILLING HOLE LAYOUT	D-AM-M8123-0-1	2
REF		MODULE ECO HISTORY	B-MH M8123-0-R	3
1		ETCHED CIRCUIT BOARD	5011869	4
11	C7 THRU C124	CAPACITOR, .01uf, 50V	1001810-53	5
8	C1 THRU C8	CAPACITOR, 6.8uf, 35V, 10%	1005300	6
5	R6, R8, R10, R11, R14	RESISTOR, 150 OHM, 1/4W, 5%	1300250	7
5	E4, E31, E50, E39, E104	I.C. DEC 74S00	1910532	8
12	E8, E27, E34, E52, E56, E57, E72, E78, E79, E84, E85, E100	I.C. DEC 74S04	1910534	9
12	E3, E10, E20, E29, E40, E48, E53, E59, E80, E87, E92, E102	I.C. DEC 74S10	1910536	10
4	E55, E86, E89, E95	I.C. DEC 74S11	1910537	11
3	E16, E30, E41	I.C. DEC 74S20	1910539	12
1	E15	I.C. DEC 74S40	1910541	13
37	E5, E7, E9, E8, E11, E12, E17, E18 E19, E20, E21, E22, E23, E24, E33 E35, E42, E43, E44, E45, E46, E47 E51, E54, E65, E70, E71, E74, E75 E76, E77, E80, E81, E82, E83, E32 E104	I.C. DEC 74S64	1910542	14
4	E49, E50, E63, E64	I.C. DEC 74S153	1910547	15
12	E66 E88, E98, E97, E90, E107, E108, E109, E110, E117, E119, E87	I.C DEC 74S174	1910550	16
14	E1, E2, E13, E14, E25, E26, E36, E37, E38, E73, E115, E124, E88, E90	I.C. DEC 74S74	1910544	17
2	R1 R3	RES. 680 Ω ¼W 5%	1301424	18
2	R2, R4	RES. 330 Ω ¼W 5%	1300295	19
1	E99	ROM 256x4	23077A1	20
1	E94	ROM 256x4	23075A1	21
1	E93	ROM 256x4	23074A1	22
1	E89	ROM 256x4	23080A2	23
1	E91	ROM 256x4	23081A2	24
1	E100	ROM 256x4	23082A1	25
1	E111	74LS175	1910157	26
1	E123	ROM 256x4	23066A1	27
1	E119	ROM 256x4	23067A2	28
1	E121	ROM 256x4	23068A2	29
1	E122	ROM 256x4	23069A2	30
1	E114	ROM 256x4	23070A1	31
1	E112	ROM 256x4	23071A1	32
1	E110	ROM 256x4	23072A2	33
1	E113	ROM 256x4	23073A1	34
1	E105	ROM 256x4	23074A1	35
1	E103	ROM 256x4	23075A1	36
1	E101	ROM 256x4	23076A1	37
12		EYELET	9000732	38
1		HANDLE MODULE	1210711-2	39

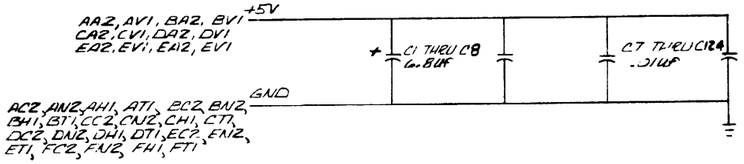

[redacted]	B	16
[redacted]	B	16
[redacted]	B	16
[redacted]	B	16
[redacted]	B	16
[redacted]	B	16
[redacted]	B	16
[redacted]	B	16

QTY	REF. DESIGNATION	DESCRIPTION	PART NO.	ITEM NO.
		PARTS LIST		

FIRST USED ON OPTION MODEL: KB11-C
ETCH BOARD REV. C

DEC NO.	EIA NO.	DEC NO.	EIA NO.

SEMICONDUCTOR CONVERSION CHART

REV.	CHK	CHANGE NO.	REVISIONS
B			
A		00001	ORIGINATED

A. HELENIUS 3-JAN-74
M8123-0-1

DRN. [redacted] DATE 11/5/75
CHKD. [redacted] DATE 12-2-75
ENG. [redacted] DATE 12-2-75
PROJ. ENG. [redacted] DATE 12/2/75
PROD. [redacted] DATE 11/2/75

NEXT HIGHER ASSY: B-DD-KB11-C
SCALE: NONE
SHEET 1 OF 14

digital

TITLE: ROM & ADDR CONTROL (RAC)

SIZE D | CODE CS | NUMBER M8123-0-1 | REV. B

DIST.

65

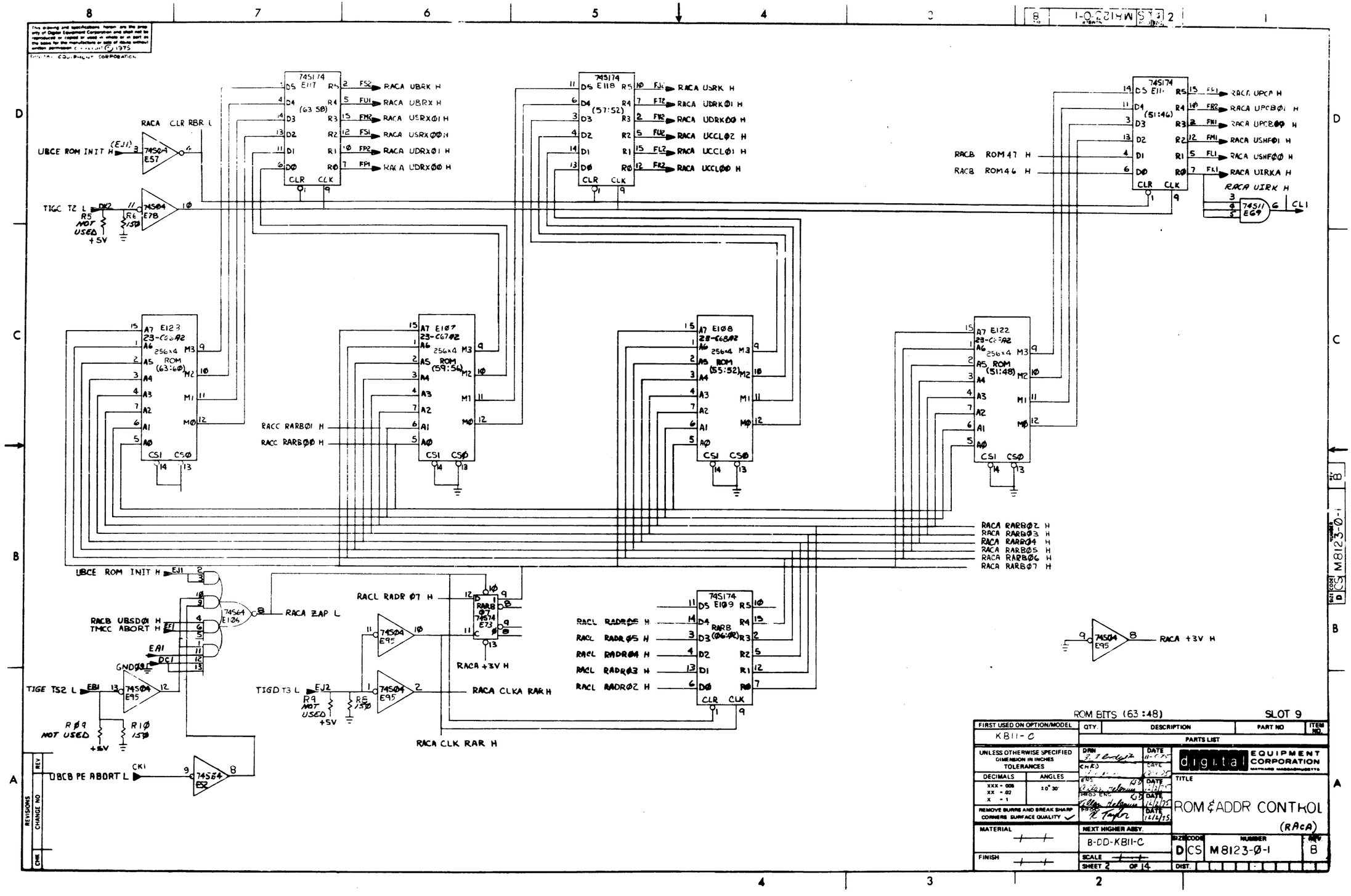

74S174 E117 (63:58)
74S174 E118 (57:52)
74S174 E111 (51:46)
74S174 E109 RARB (06:02)
E123 23-C68A2 256x4 ROM (63:60)
E107 23-C67A2 256x4 ROM (59:56)
E108 23-C68A2 256x4 ROM (55:52)
E122 23-C68A2 256x4 ROM (51:48)
RACA UBRK H
RACA UBRX H
RACA USRX01 H
RACA USRX00 H
RACA UDRX01 H
RACA UDRX00 H
RACA USRK H
RACA UDRK01 H
RACA UDRK00 H
RACA UCCL02 H
RACA UCCL01 H
RACA UCCL00 H
RACA UPCA H
RACA UPCB01 H
RACA UPCB00 H
RACA USHF01 H
RACA USHF00 H
RACA UIRKA H
RACA UIRK H
RACB ROM47 H
RACB ROM46 H
RACA RARB02 H
RACA RARB03 H
RACA RARB04 H
RACA RARB05 H
RACA RARB06 H
RACA RARB07 H
RACC RARB01 H
RACC RARB00 H
RACA CLR RBR L
UBCE ROM INIT H
TIGC T2 L
R5 NOT USED
R6 150
+5V
RACA ZAP L
RACB UBSD01 H
TMCC ABORT H
EA1
DC1
GND09
TIGE TS2 L
R09 NOT USED
R10 150
UBCB PE ABORT L
RACL RADR 07 H
RACA +3V H
RACA CLKA RAR H
RACA CLK RAR H
TIGD T3 L
R9 NOT USED
R8 150
RACL RADR05 H
RACL RADR05 H
RACL RADR04 H
RACL RADR03 H
RACL RADR02 H
RACA +3V H
ROM BITS (63:48)
SLOT 9
FIRST USED ON OPTION/MODEL
KB11-C
QTY.
DESCRIPTION
PART NO
ITEM NO.
PARTS LIST
UNLESS OTHERWISE SPECIFIED DIMENSION IN INCHES TOLERANCES
DECIMALS
ANGLES
REMOVE BURRS AND BREAK SHARP CORNERS SURFACE QUALITY
MATERIAL
FINISH
NEXT HIGHER ASSY.
B-DD-KB11-C
SCALE
SHEET 2 OF 14
digital EQUIPMENT CORPORATION
TITLE
ROM & ADDR CONTROL
(RACA)
SIZE D
CODE CS
NUMBER M8123-0-1
REV B
DIST.
REVISIONS
REV
CHANGE NO
CHK

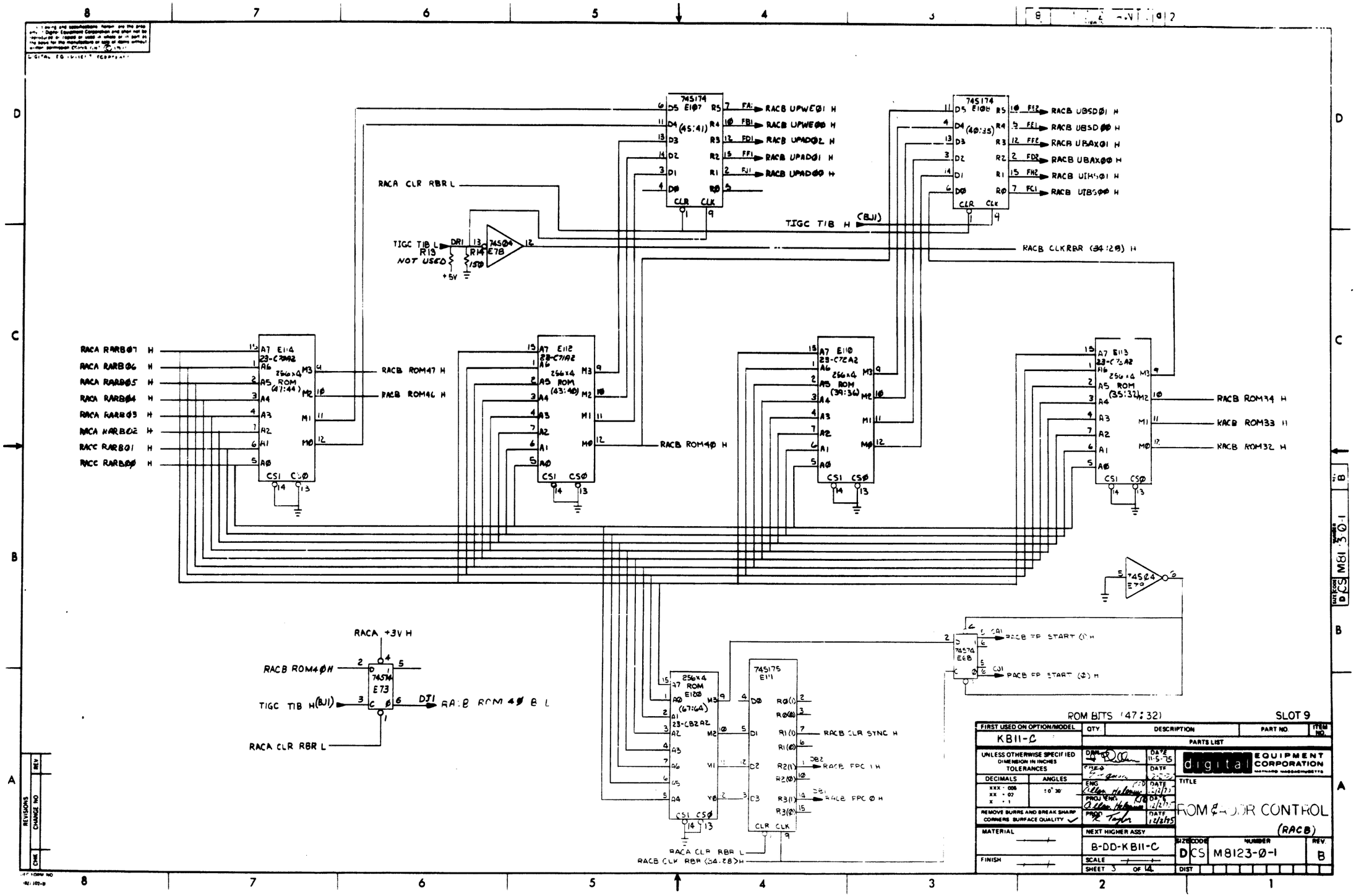

74S174 E107 (45:41)
RACB UPWE01 H
RACB UPWE00 H
RACB UPAD02 H
RACB UPAD01 H
RACB UPAD00 H
74S174 E108 (40:35)
RACB UBSD01 H
RACB UBSD00 H
RACB UBAX01 H
RACB UBAX00 H
RACB UIBS01 H
RACB UIBS00 H
RACA CLR RBR L
TIGC TIB H (BJ1)
TIGC TIB L
R13 NOT USED
R14 150
74S04 E78
+5V
RACB CLKRBR (34:28) H
RACA RARB07 H
RACA RARB06 H
RACA RARB05 H
RACA RARB04 H
RACA RARB03 H
RACA RARB02 H
RACC RARB01 H
RACC RARB00 H
E114 23-C70A2 256x4 ROM (47:44)
RACB ROM47 H
RACB ROM46 H
E112 23-C71A2 256x4 ROM (43:40)
RACB ROM40 H
E110 23-C72A2 256x4 ROM (39:36)
E113 23-C73A2 256x4 ROM (35:32)
RACB ROM34 H
RACB ROM33 H
RACB ROM32 H
74S04 E79
RACA +3V H
RACB ROM40H
74S74 E73
TIGC TIB H (BJ1)
DJ1 RACB ROM40 B L
RACA CLR RBR L
256x4 ROM E120 (67:64) 23-CB2A2
74S175 E111
RACB CLR SYNC H
RACB FPC 1 H
RACB FPC 0 H
RACA CLR RBR L
RACB CLK RBR (34:28) H
74S74 E68
RACB FP START (1) H
RACB FP START (0) H
ROM BITS (47:32)
SLOT 9
FIRST USED ON OPTION/MODEL
KB11-C
QTY
DESCRIPTION
PART NO.
ITEM NO.
PARTS LIST
UNLESS OTHERWISE SPECIFIED DIMENSION IN INCHES TOLERANCES
DECIMALS
ANGLES
REMOVE BURRS AND BREAK SHARP CORNERS SURFACE QUALITY
MATERIAL
FINISH
NEXT HIGHER ASSY
B-DD-KB11-C
SCALE
SHEET 3 OF 14
digital EQUIPMENT CORPORATION
MAYNARD MASSACHUSETTS
TITLE
ROM & ADDR CONTROL (RACB)
SIZE D
CODE CS
NUMBER M8123-0-1
REV B
DIST
REVISIONS
CHANGE NO
REV

67

...ing and specifications herein are the property of Digital Equipment Corporation and shall not be reproduced or copied or used in whole or in part as the basis for the manufacture or sale of items without written permission. COPYRIGHT © 1975 DIGITAL EQUIPMENT CORPORATION.

RACB ROM34 H
RACB ROM32 H
RACB ROM33 H
RACB CLKRBR (34:28) H
RACA +3V H
RACC ROM INIT L
UBCE ROM INIT H (E11)
TIGC 718 L (DR1)
RACA CLR RBR L
RACD RAMA13 H
RACD RAMA12 H
RACD RAMA11 H
RACD RAMA10 H
RACL RADR01 H
RACL RADR00 H
RACL RADR06 H
RACL RADR05 H
RACL RADR04 H
RACA CLK RAR H
RACL RADR07 H
RACA CLK RAR H
RACA +3V H
RACA ZAP L
RACA CLKA RAR H
RACC RARA06 H
RACC RARA05 H
RACC RARA04 H
RACC RARA01 H
RACC RARA00 H
RACC RARA07 H

RACC USHC01 H
RACC UBCT02 H
RACC UBCT01 H
RACC UBCT00 H
RACC UMSC02 H
RACC UMSC01 H
RACC USHC00 H
RACC USHC00 L
RACC UMSC00 H
RACC UMSC00 L
RACC UBSC02 H
RACC UBSC01 H
RACC UBSC00 H
RACC UAMX01 H
RACC UAMX00 H
RACC UBMX01 H
RACC UBMX00 H
RACC UAMX01 H
RACC UAMX00 H
RACC UAMX01 H
RACC UAMX00 H
RACC UAMX01 H
RACC UA

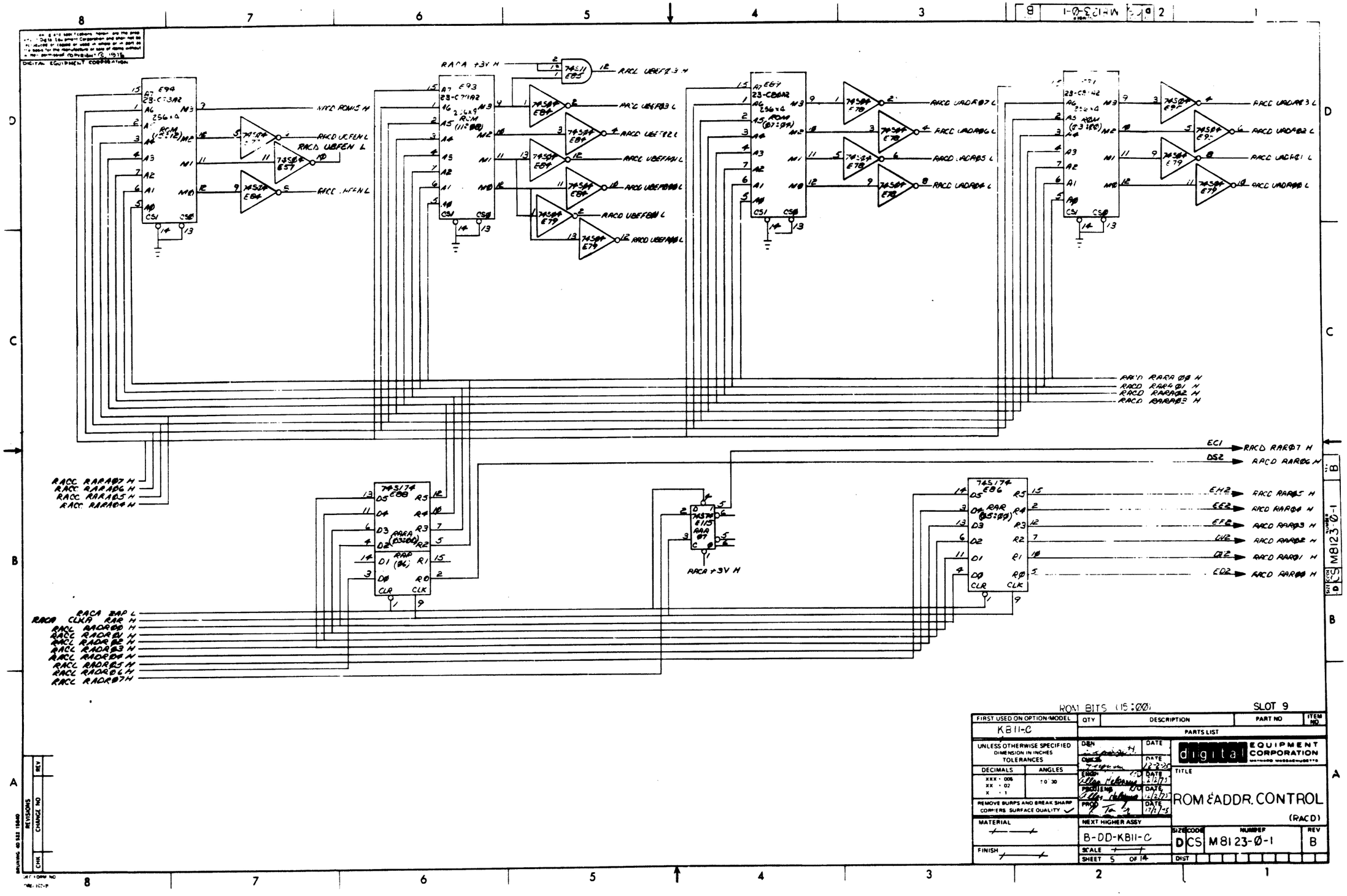

DIGITAL EQUIPMENT CORPORATION
RACA +3V H
RACD ROM15 H
RACD UBFEN L
RACD UBEF03 L
RACD UBEF02 L
RACD UBEF01 L
RACD UBEF00 L
RACD UBEF00 L
RACD UADR07 L
RACD UADR06 L
RACD UADR05 L
RACD UADR04 L
RACD UADR03 L
RACD UADR02 L
RACD UADR01 L
RACD UADR00 L
RACD RARA00 H
RACD RARA01 H
RACD RARA02 H
RACD RARA03 H
RACC RARA07 H
RACC RARA06 H
RACC RARA05 H
RACC RARA04 H
EC1 RACD RAR07 H
DS2 RACD RAR06 H
EH2 RACD RAR05 H
EE2 RACD RAR04 H
EF2 RACD RAR03 H
DV2 RACD RAR02 H
DI2 RACD RAR01 H
ED2 RACD RAR00 H
RACA +3V H
RACA ZAP L
RACA CLKA RAR H
RACL RADR00 H
RACL RADR01 H
RACL RADR02 H
RACL RADR03 H
RACL RADR04 H
RACL RADR05 H
RACL RADR06 H
RACL RADR07 H
ROM BITS (15:00)
SLOT 9
FIRST USED ON OPTION/MODEL
KB11-C
QTY
DESCRIPTION
PART NO
ITEM NO
PARTS LIST
UNLESS OTHERWISE SPECIFIED
DIMENSION IN INCHES
TOLERANCES
DECIMALS
ANGLES
REMOVE BURRS AND BREAK SHARP CORNERS SURFACE QUALITY
MATERIAL
FINISH
NEXT HIGHER ASSY
B-DD-KB11-C
SCALE
SHEET 5 OF 14
digital EQUIPMENT CORPORATION
TITLE
ROM & ADDR. CONTROL
(RACD)
SIZE D
CODE CS
NUMBER M8123-0-1
REV B
DIST
REVISIONS
CHANGE NO
REV
CHK

69

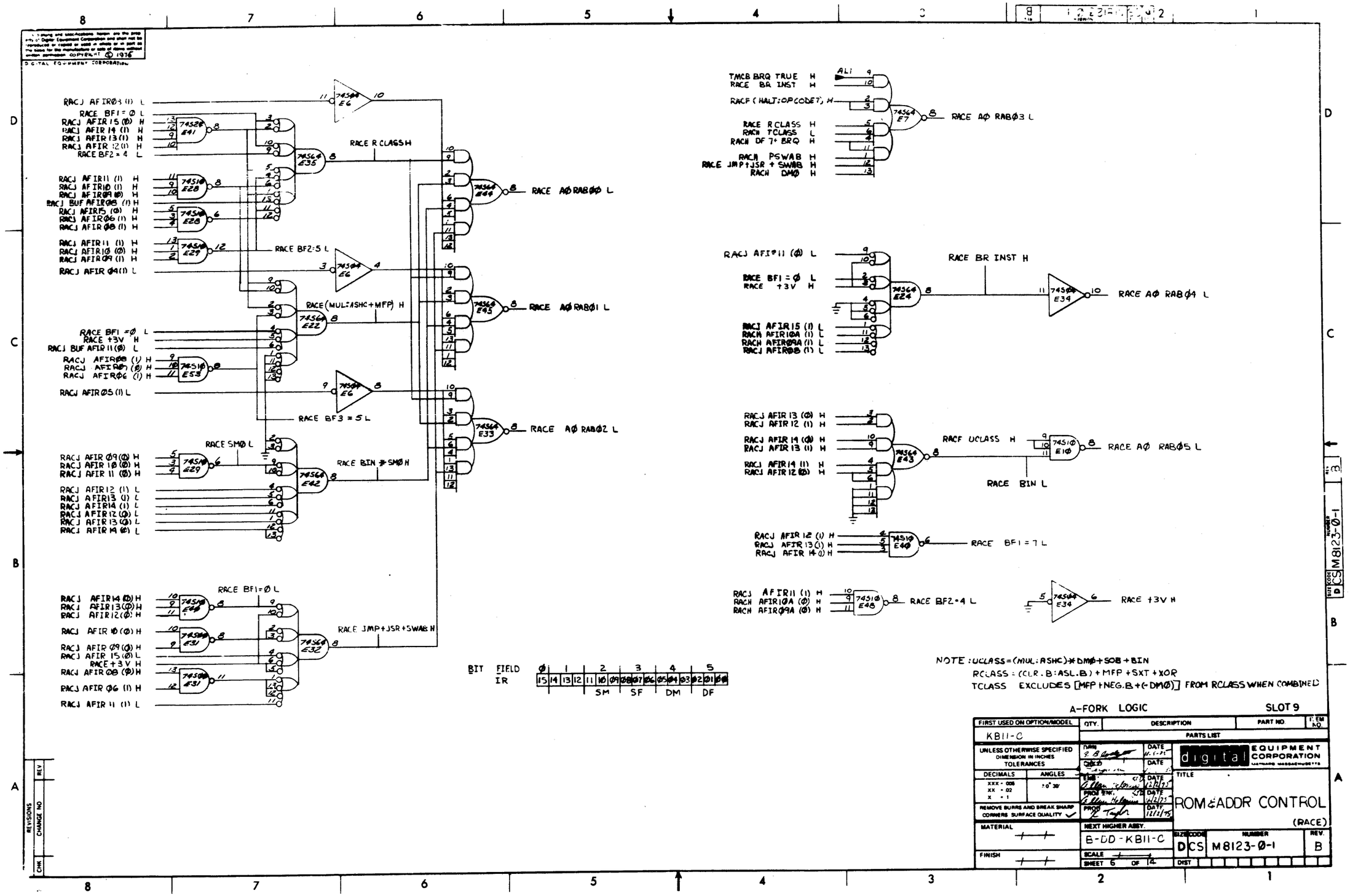

NOTE: UCLASS = (MUL:ASHC) * DMØ + SOB + BIN
RCLASS = (CLR.B:ASL.B) + MFP + SXT + XOR
TCLASS EXCLUDES [MFP + NEG.B + (-DMØ)] FROM RCLASS WHEN COMBINED

A-FORK LOGIC SLOT 9

FIRST USED ON OPTION/MODEL	QTY.	DESCRIPTION	PART NO.	ITEM NO.
KB11-C		PARTS LIST		

UNLESS OTHERWISE SPECIFIED DIMENSION IN INCHES TOLERANCES

DECIMALS	ANGLES
XXX - .005	±0° 30'
XX - .02	
X - .1	

REMOVE BURRS AND BREAK SHARP CORNERS SURFACE QUALITY ✓

MATERIAL

FINISH

DRN: B. B. [signature] DATE 11-1-75
CHKD: [signature] DATE
ENG: [signature] DATE 12/2/75
PROJ ENG: [signature] DATE 12/2/75
PROD: [signature] DATE 12/2/75

NEXT HIGHER ASSY. B-DD-KB11-C

SCALE

SHEET 6 OF 14

digital EQUIPMENT CORPORATION MAYNARD, MASSACHUSETTS

TITLE ROM & ADDR CONTROL (RACE)

SIZE	CODE	NUMBER	REV.
D	CS	M8123-Ø-1	B

DIST

REVISIONS: REV | CHANGE NO | CHK

COPYRIGHT © 1976 DIGITAL EQUIPMENT CORPORATION

This drawing is the confidential property of Digital Equipment Corporation and shall not be reproduced or copied or used in whole or in part as the basis for the manufacture or sale of items without written permission.

RACF BF#1=Ø L
RACJ AFIR15(Ø) H
RACJ AFIR14(Ø) H
RACJ AFIR13(Ø) H
RACJ AFIR12(Ø) H
74S20 E41
RACJ AFIR#3(1) H
RACJ AFIR#7(Ø) H
RACJ AFIR#6(Ø) H
RACJ AFIR#5(Ø) H
RACJ AFIR#4(Ø) H
74S32Ø E16
RACJ AFIR11(Ø) H
RACJ AFIR10(Ø) H
RACJ AFIR#9(Ø) H
RACJ AFIR#8(Ø) H
74S20 E30
74S64 E18
RACF IR(11:8) Ø L

RACJ AFIR15(Ø) L
RACE BIN* L
RACE BF1=7 L
RACJ BUF AFIR11(Ø) L
RACH BF2=7 L
RACE +3V H
RACH DMØ L
74S64 E23

RACJ AFIR#7(Ø) H
RACJ AFIR#1(1) H
RACF UCLASS H
RACJ AFIR 1Ø(1) H
RACJ AFIR#5(Ø) H
RACJ AFIR#4(1) H
RACH +3V H
74S64 E17
RACF A1 RAB#1 L

RACF BF#1=Ø L
RACF IR(11:8) Ø L
RACJ AFIR#7(1) L
RACJ AFIR#6(Ø) L
RACE +3V H
74S64 E21

RACJ AFIR#2(1) H
RACF(RTS*CCOP) H
RACJ BUF AFIR11(1) H
RACJ AFIR#5(1) H
RACH +3V H
74S64 E8
RACF A1 RAB#2 L

RACJ AFIR11(1) H
RACJ AFIR#(1) H
RACJ AFIR#9(Ø) H
RACJ AFIR#8(1) H
74S20 E30
RACE +3V H
RACE BF1=Ø L
RACH DMØ L
RACE BF3=5 L
74S64 E2Ø
RACF XCLASS H

RACJ AFIR#7 (1) H
RACJ AFIR#6 (Ø) H
74S00 E58
RACJ AFIR#7 (Ø) H
RACJ AFIR15 (Ø) H
74S10 EGØ

RACJ AFIR#4(Ø) H
RACJ AFIR#5(Ø) H
RACJ AFIR#3(1) H
74S10 E3
74S00 E4
RACF A1 RAB#3 L

RACF(HALT:OPCODE7) H
RACH BIN*(-SM#1) L
RACJ AFIR#9(1) H
RACJ AFIR#5(Ø) H
RACJ AFIR#3(1) H
RACJ AFIR#4(1) H
74S64 E5
RACF A1 RAB##L

RACJ AFIR#6(Ø) H
RACJ AFIR##(1) H
RACF(HALT:OPCODE7) H
74S64 E18
RACF IR(11:8) Ø L

RACE BIN*+SM## H
RACH DF7*BRQ H
RACH DM## H
74S10 E1#
RACF A2 RAB#3 L

RACF XCLASS H
74S64 E34
RACF A2 RAB#5 L

RACJ AFIR15(1) L
IRCH C(1) H
RACH AFIR#9A(1) H
74S64 E58
74S64 E47
RACF TRUE1 H

IRCH Z(1) H
RACH AFIR1#A(Ø) H
74S10 E55

IRCH N(1) H
RACH AFIR#9A(Ø) H
74S10 E59

IRCH V(1) H
RACH AFIR1#A(1) H
74S10 E48

RACJ AFIR15(Ø) L
RACH AFIR#9A(1) H
IRCH Z(1) H
74S00 E58
74S64 E46
RACF TRUE2 H

IRCH N(1) H
IRCH V(Ø) H
74S30 E59

RACH AFIR1#A(1) H
IRCH N(Ø) H
IRCH V(1) H
74S10 E48

RACH AFIR1#A(Ø) H
RACH AFIR#9A(Ø) H
74S00 E58

UCLASS = (MUL*ASHC)& DM#+SOB+BIN
XCLASS = MARK+MTP+MFP & DM#

A-FORK LOGIC — SLOT 9

FIRST USED ON OPTION/MODEL	QTY	DESCRIPTION	PART NO	ITEM NO
KB11-C		PARTS LIST		

UNLESS OTHERWISE SPECIFIED DIMENSION IN INCHES TOLERANCES
DECIMALS: XXX ± .005, XX ± .02, X ± .1 — ANGLES: ±0° 30'
REMOVE BURRS AND BREAK SHARP CORNERS SURFACE QUALITY ✓
MATERIAL —
FINISH —

DRN — DATE
DES — DATE
ENG Allen Mckenzie — DATE 1/14/75
PM/ENG Allen Mckenzie — DATE 1/14/75
PROJ Frank Taylor — DATE 1/14/75

digital EQUIPMENT CORPORATION

TITLE: ROM&ADDR CONTROL (RACF)

NEXT HIGHER ASSY: B-DD-KB11-C
SIZE D | CODE | CS | M8123-Ø-1 | REV B
SCALE —
SHEET 1 OF 1
DIST

REVISIONS: REV | CHANGE NO | CHK

M8123-Ø-1 REV B

This drawing and specifications, herein, are the property of Digital Equipment Corporation and shall not be reproduced or copied or used in whole or in part as the basis for the manufacture or sale of items without written permission of same. © 1975

RACJ AF IRI1 (1) H
RACJ AF IRIØ (1) H
RACJ AF IRØ9 (1) H
74S1Ø E29
RACH BF2=7 L

RACJ BUF AF IRØB (1) H
RACE BR INST H
74S3Ø E64
RACH A2 RABØ2 L

RACF TRUE E H
74S3Ø E64
RACH A2 RABØ1 L

PDRA BRMXIØ H (BD1)
74S4Ø E6
RACH +3V H
74S374 E36
RACH AF IRIØA (1) H
RACH AF IRIØA (Ø) H

PDRA BRMXØ9 H (BC1)
74S374 E36
RACH AF IRØ9A (1) H

RACJ CLKAFIR L
74S4Ø E27
RACH AF IRØ9A (Ø) H

RACE BF1=7 L
74S4Ø E34
RACH NEG.B≠DMØ H
RACF TRUE 1 H
RACE BR INST H
74S64 E12
RACH A2 RABØØ L

FRMU FP PRESENT L
BS1
74S4Ø E57
RACJ AFIRIS (1) H
R2 330 +5V
R1 6ØØ

RACJ AF IRI1 (Ø) H
RACJ AF IRØB (Ø) H
RACJ AF IRØ7 (1) H
RACJ AF IRØ6 (1) H
74S2Ø E16
74S4Ø E6
RACH PSWAB H

RACJ AF IRI1 (Ø) H
RACJ AF IRIØ (Ø) H
74S3Ø E31
RACE BF1=Ø L
RACE BF1=7 L
74S1Ø E10
RACH BIN≠(-SMØ1) L

RACJ AF IRØB (1) H
RACJ AF IRØ7 (Ø) H
RACJ AF IRØ6 (Ø) H
74S1Ø E28
RACE +3V H
RACE BF1=Ø L
RACE BF2=3 L
74S64 E9
RACH NEG.B≠DMØ H

RACH +3V H
RACJ AF IRØ5 (Ø) H
RACJ AF IRØ4 (Ø) H
RACJ AF IRØ3 (Ø) H
74S1Ø E3
74S4Ø E34
RACH DMØ H
RACH DMØ L

74S4Ø E57
RACH AØ RABØ7 L

TMCB BRQ TRUE L AKI
74S3Ø E4
RACH DFT+BRQ H

RACJ AF IRØØ (1) H
RACJ AF IRØ1 (1) H
RACJ AF IRØ2 (1) H
74S1Ø E3
RACH DFT L

RACH +3V H
RACH DMØ L
RACJ AF IRI1(1) H
RACJ AF IRIØ (Ø) H
RACJ AF IRØ7 (Ø) H
RACJ BUF AF IRØØ (1) H
RACJ AF IRØ9 (1) H
RACJ AF IRØ7 (Ø) H
RACJ AF IRØ6 (Ø) H
74S4Ø E31
74S64 E19
RACH TCLASS L
RACE BIN≠SMØ H
RACE RCLASS H
RACE BF1=7 L
RACE BF1=Ø L
RACE SMØ L
RACH DMØ H
RACE JMP+JSR+SWAB H
RACH PSWAB H
74S64 E11
RACH A1 RABØ4 L

RCLASS=(CLR.B:ASL.B)+MFP+SXT+XOR
TCLASS EXCLUDES(MFP+NEG.B+(-DMØ))] FROM RCLASS

RACC UMSCØ2 H
RACC UMSCØØ H
RACH +3V H
74S1Ø E48
RACJ AFIRI1 (Ø) H
RACE SMØ L
74S11 E55
RACC UMSCØ1 H
74S64 E56
RACE BIN L
74S4Ø E56
RACJ BUF AFIRI1 (1) H
RACH AFIRIØA (1) H
74S1Ø E68
TMCB BRQ TRUE H (AL1)
RACE BR INST H
74S64 E54
ANI
RACH BUST H
RACJ AFIRØ5 (Ø) H
RACH DMØ L
74S11 E55
RACE BR INST H
74S4Ø E56

RACC UMSC Ø1 H ER1
74S4Ø E1ØØ
RACC UMSC ØØ H DU2
74S1Ø E1Ø2
RACC UMSC Ø2 H ER2
74S4Ø E1ØØ
74S4Ø E1ØØ
74S74 E9Ø
RACC ROM INIT L
TIG 2 T3 L EJ2
74S4Ø E1ØØ
BT2
RACH +3V H
RACH SYNC CLK H

A-FORK LOGIC SLOT 9

FIRST USED ON OPTION/MODEL	QTY	DESCRIPTION	PART NO	ITEM NO
KB11-C		PARTS LIST		

UNLESS OTHERWISE SPECIFIED DIMENSION IN INCHES TOLERANCES
DECIMALS: XXX ± .005, XX ± .02, X ± .1 — ANGLES: 1° 30'
REMOVE BURRS AND BREAK SHARP CORNERS SURFACE QUALITY ✓
MATERIAL —
FINISH —

DRN — DATE 4-5-75
ENG — DATE
PROJ ENG Gilles Malenfant DATE 10/1/75
PROJ Taylor DATE 12/2/75

digital EQUIPMENT CORPORATION MAYNARD MASSACHUSETTS

TITLE: ROM & ADDR. CONTROL (RACH)

NEXT HIGHER ASSY: E-DD-KB11-C
SIZE D CODE CS NUMBER M8123-Ø-1 REV B
SCALE —
SHEET 8 OF 14
DIST

REVISIONS: REV | CHANGE NO | CHK

M8123-Ø-1

22

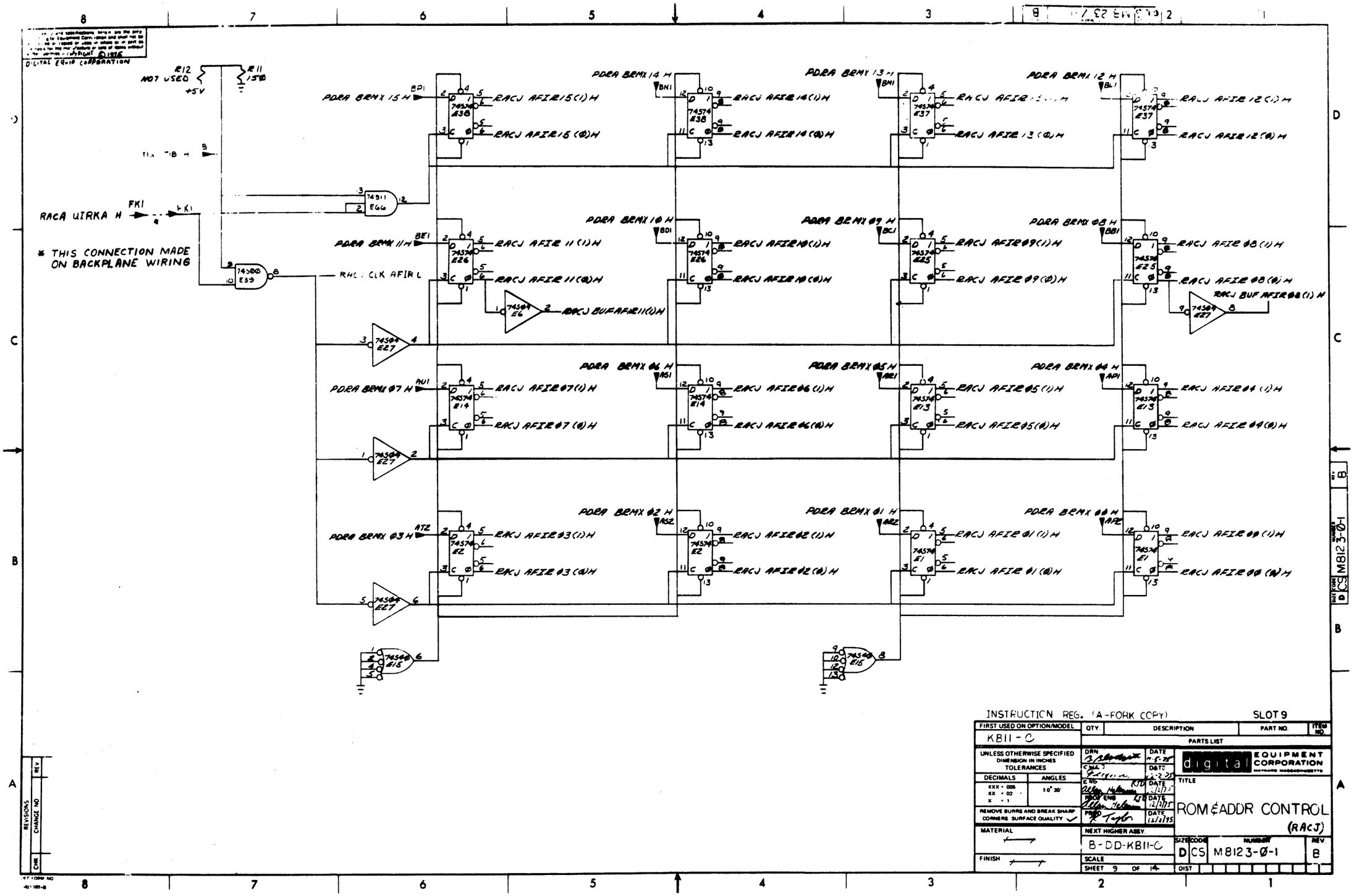

DIGITAL EQUIP CORPORATION
R12 NOT USED
R11 150
+5V
RACA UIRKA H
FK1
* THIS CONNECTION MADE ON BACKPLANE WIRING
74S00 E39
74S11 E66
RACJ CLK AFIR L
PDRA BRMX 15 H
PDRA BRMX 14 H
PDRA BRMX 13 H
PDRA BRMX 12 H
PDRA BRMX 11 H
PDRA BRMX 10 H
PDRA BRMX 09 H
PDRA BRMX 08 H
PDRA BRMX 07 H
PDRA BRMX 06 H
PDRA BRMX 05 H
PDRA BRMX 04 H
PDRA BRMX 03 H
PDRA BRMX 02 H
PDRA BRMX 01 H
PDRA BRMX 00 H
RACJ AFIR 15 (1) H
RACJ AFIR 15 (0) H
RACJ AFIR 14 (1) H
RACJ AFIR 14 (0) H
RACJ AFIR 13 (0) H
RACJ AFIR 12 (1) H
RACJ AFIR 12 (0) H
RACJ AFIR 11 (1) H
RACJ AFIR 11 (0) H
RACJ BUF AFIR 11 (1) H
RACJ AFIR 10 (1) H
RACJ AFIR 10 (0) H
RACJ AFIR 09 (1) H
RACJ AFIR 09 (0) H
RACJ AFIR 08 (1) H
RACJ AFIR 08 (0) H
RACJ BUF AFIR 08 (1) H
RACJ AFIR 07 (1) H
RACJ AFIR 07 (0) H
RACJ AFIR 06 (1) H
RACJ AFIR 06 (0) H
RACJ AFIR 05 (1) H
RACJ AFIR 05 (0) H
RACJ AFIR 04 (1) H
RACJ AFIR 04 (0) H
RACJ AFIR 03 (1) H
RACJ AFIR 03 (0) H
RACJ AFIR 02 (1) H
RACJ AFIR 02 (0) H
RACJ AFIR 01 (1) H
RACJ AFIR 01 (0) H
RACJ AFIR 00 (1) H
RACJ AFIR 00 (0) H
74S74 E38
74S74 E37
74S74 E26
74S74 E25
74S74 E14
74S74 E13
74S74 E2
74S74 E1
74S04 E6
74S04 E27
74S40 E15
INSTRUCTION REG. (A-FORK COPY)
SLOT 9
FIRST USED ON OPTION/MODEL
KB11-C
QTY.
DESCRIPTION
PART NO.
ITEM NO.
PARTS LIST
UNLESS OTHERWISE SPECIFIED DIMENSION IN INCHES TOLERANCES
DECIMALS
ANGLES
REMOVE BURRS AND BREAK SHARP CORNERS SURFACE QUALITY
MATERIAL
FINISH
DRN
CHK
ENG
PROD ENG
PROD
DATE
NEXT HIGHER ASSY.
B-DD-KB11-C
SCALE
SHEET 9 OF 14
digital EQUIPMENT CORPORATION
TITLE
ROM & ADDR CONTROL (RACJ)
SIZE D
CODE CS
NUMBER M8123-0-1
REV. B
DIST
REVISIONS
CHANGE NO
REV
CHK

73

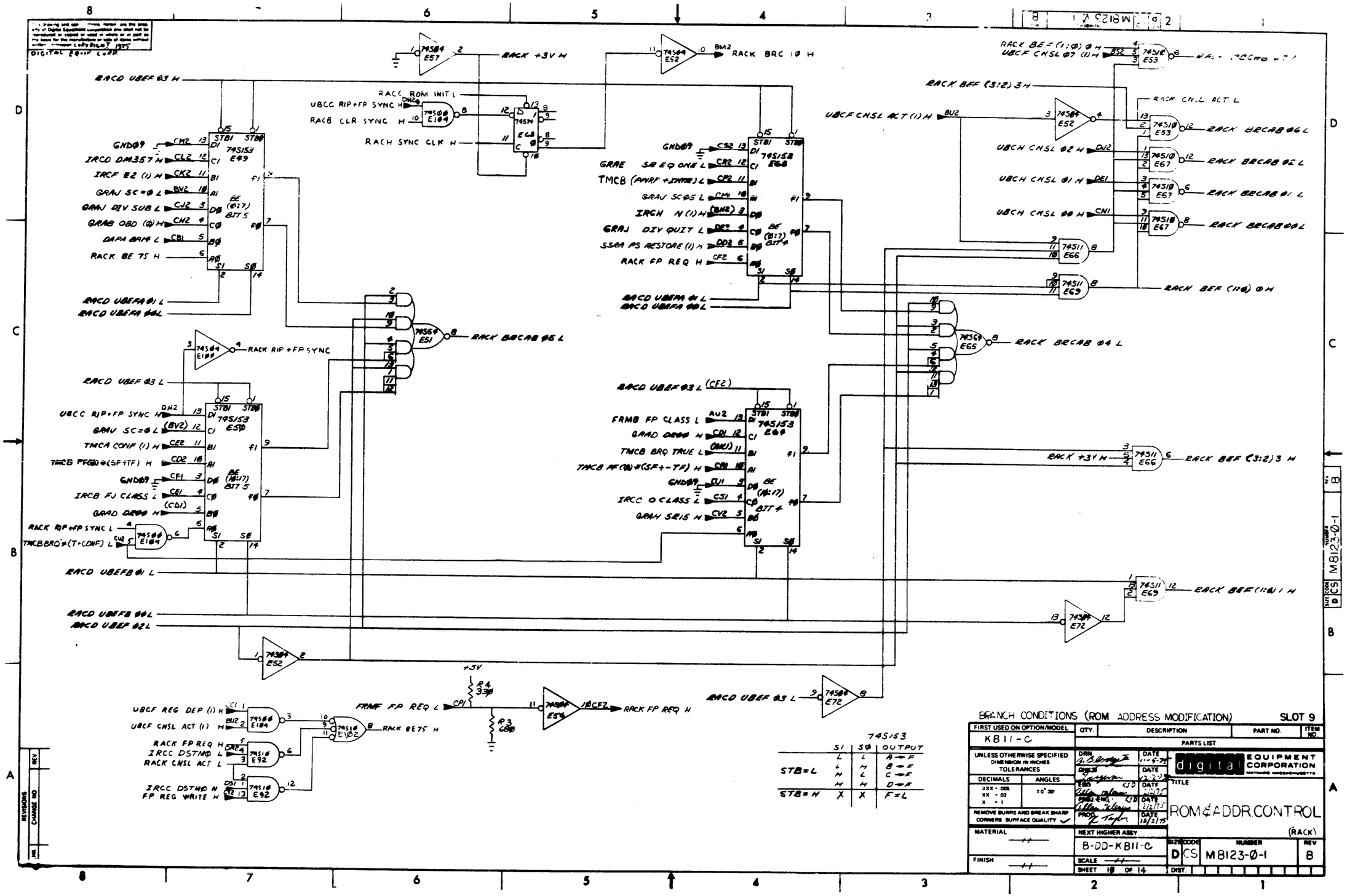

RACK +3V H
RACK BRC 10 H
RACD UBEF 03 H
RACC ROM INIT L
UBCC RIP+FP SYNC H
RACB CLR SYNC H
RACH SYNC CLK H
GND09
IRCD DM357 H
IRCF Z2 (1) H
GRAJ SC=0 L
GRAJ DIV SUB L
GRAB OBD (0) H
DAPA BR14 L
RACK BE 75 H
RACD UBEFA 01 L
RACD UBEFA 00 L
RACK RIP+FP SYNC
RACD UBEF 03 L
UBCC RIP+FP SYNC H
GRAJ SC=0 L
TMCA CONF (1) H
TMCB PF(0)*(SF+TF) H
IRCB FJ CLASS L
GRAD DR00 H
RACK RIP+FP SYNC L
TMCB BRQ*(T+CONF) L
RACD UBEFB 01 L
RACD UBEFB 00 L
RACD UBEF 02 L
GRAE SR EQ ONE L
TMCB (PWRF+INTR) L
GRAJ SC05 L
IRCH N (1) H
GRAJ DIV QUIT L
SSRA PS RESTORE (1) H
RACK FP REQ H
RACD UBEFA 01 L
RACD UBEFA 00 L
RACD UBEF 03 L (CF2)
FRMB FP CLASS L
GRAD DR00 H
TMCB BRQ TRUE L
TMCB PF(0)*(SF+-TF) H
IRCC O CLASS L
GRAH SR15 H
RACK BEF (1:0) 0 H
UBCF CNSL 07 (1) H
RACK BEF (3:2) 3 H
UBCF CNSL ACT (1) H
RACK CNSL ACT L
UBCH CNSL 02 H
UBCH CNSL 01 H
UBCH CNSL 00 H
RACK BRCAB 06 L
RACK BRCAB 02 L
RACK BRCAB 01 L
RACK BRCAB 00 L
RACK BEF (1:0) 0 H
RACK BRCAB 04 L
RACK +3V H
RACK BEF (3:2) 3 H
RACK BEF (1:0) 1 H
RACD UBEF 03 L
UBCF REG DEP (1) H
UBCF CNSL ACT (1) H
RACK FP REQ H
IRCC DSTMD L
RACK CNSL ACT L
IRCC DSTMD H
FP REG WRITE H
RACK BE75 H
FRMF FP REQ L
RACK FP REQ H
+5V
R4 330
R3 680
74S153
S1 S0 OUTPUT
STB=L L L A→F
L H B→F
H L C→F
H H D→F
STB=H X X F=L
BRANCH CONDITIONS (ROM ADDRESS MODIFICATION) SLOT 9
FIRST USED ON OPTION/MODEL KB11-C
QTY. DESCRIPTION PART NO. ITEM NO.
PARTS LIST
UNLESS OTHERWISE SPECIFIED DIMENSION IN INCHES TOLERANCES
DECIMALS ANGLES
REMOVE BURRS AND BREAK SHARP CORNERS SURFACE QUALITY
MATERIAL
FINISH
NEXT HIGHER ASSY. B-DD-KB11-C
SCALE
SHEET 10 OF 14
digital EQUIPMENT CORPORATION
TITLE ROM & ADDR. CONTROL (RACK)
SIZE D CODE CS NUMBER M8123-0-1 REV B
DIST.

74

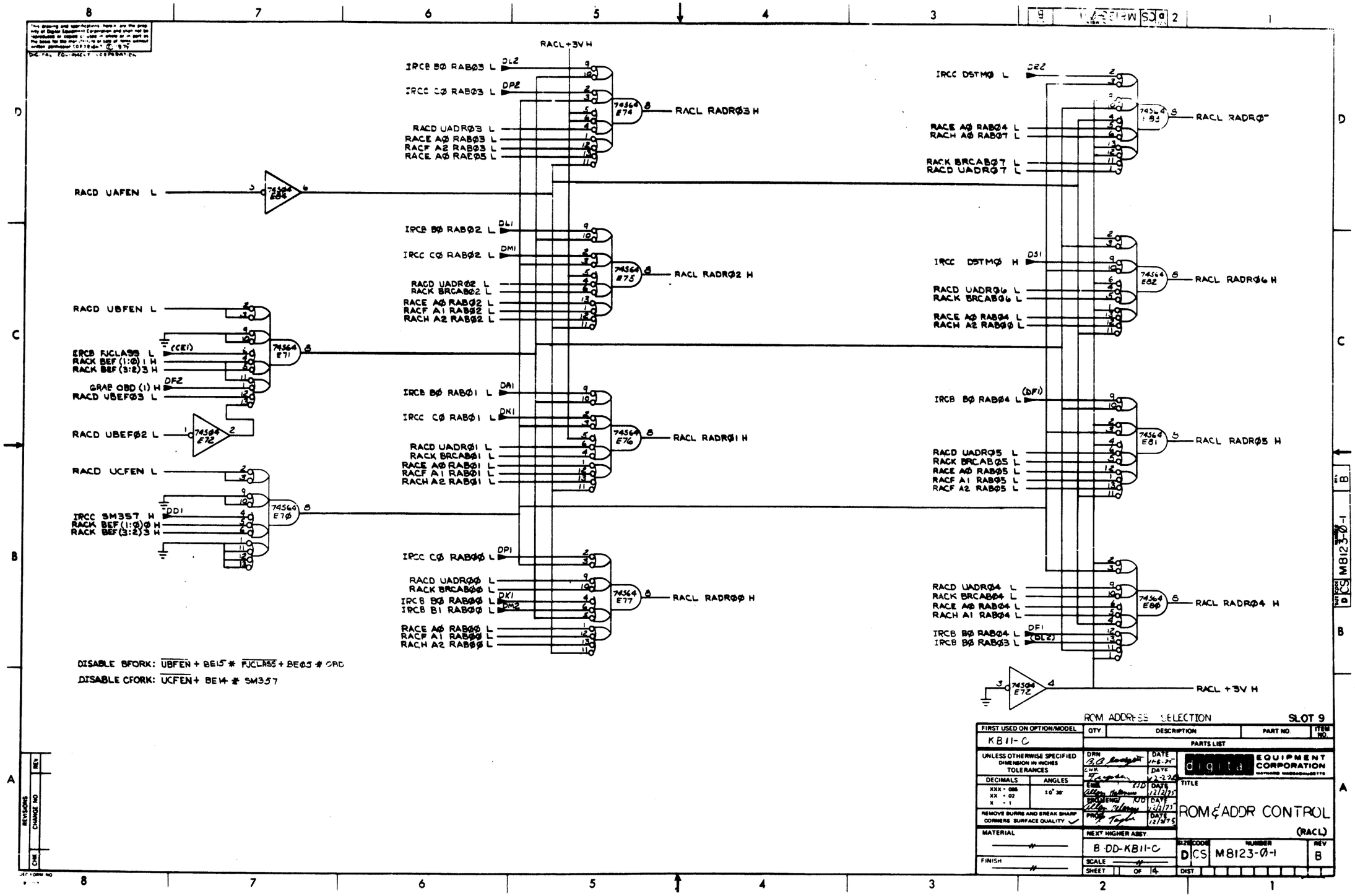

RACL +3V H
IRCB BØ RABØ3 L
IRCC CØ RABØ3 L
RACD UADRØ3 L
RACE AØ RABØ3 L
RACF A2 RABØ3 L
RACE AØ RABØ5 L
RACL RADRØ3 H
RACD UAFEN L
IRCB BØ RABØ2 L
IRCC CØ RABØ2 L
RACD UADRØ2 L
RACK BRCABØ2 L
RACE AØ RABØ2 L
RACF A1 RABØ2 L
RACH A2 RABØ2 L
RACL RADRØ2 H
RACD UBFEN L
IRCB FJCLASS L
RACK BEF (1:Ø) 1 H
RACK BEF (3:2) 3 H
GRAB OBD (1) H
RACD UBEFØ3 L
RACD UBEFØ2 L
IRCB BØ RABØ1 L
IRCC CØ RABØ1 L
RACD UADRØ1 L
RACK BRCABØ1 L
RACE AØ RABØ1 L
RACF A1 RABØ1 L
RACH A2 RABØ1 L
RACL RADRØ1 H
RACD UCFEN L
IRCC SM357 H
RACK BEF (1:Ø) Ø H
RACK BEF (3:2) 3 H
IRCC CØ RABØØ L
RACD UADRØØ L
RACK BRCABØØ L
IRCB BØ RABØØ L
IRCB B1 RABØØ L
RACE AØ RABØØ L
RACF A1 RABØØ L
RACH A2 RABØØ L
RACL RADRØØ H
IRCC DSTMØ L
RACE AØ RABØ4 L
RACH AØ RABØ7 L
RACK BRCABØ7 L
RACD UADRØ7 L
RACL RADRØ7
IRCC DSTMØ H
RACD UADRØ6 L
RACK BRCABØ6 L
RACE AØ RABØ4 L
RACH A2 RABØØ L
RACL RADRØ6 H
IRCB BØ RABØ4 L
RACD UADRØ5 L
RACK BRCABØ5 L
RACE AØ RABØ5 L
RACF A1 RABØ5 L
RACF A2 RABØ5 L
RACL RADRØ5 H
RACD UADRØ4 L
RACK BRCABØ4 L
RACE AØ RABØ4 L
RACH A1 RABØ4 L
IRCB BØ RABØ4 L
IRCB BØ RABØ3 L
RACL RADRØ4 H
RACL +3V H
DISABLE BFORK: UBFEN + BE15 * FJCLASS + BEØ5 * OBD
DISABLE CFORK: UCFEN + BE14 * SM357
ROM ADDRESS SELECTION
SLOT 9
FIRST USED ON OPTION/MODEL
KB11-C
QTY
DESCRIPTION
PART NO.
ITEM NO.
PARTS LIST
UNLESS OTHERWISE SPECIFIED DIMENSION IN INCHES TOLERANCES
DECIMALS
ANGLES
REMOVE BURRS AND BREAK SHARP CORNERS SURFACE QUALITY
MATERIAL
FINISH
NEXT HIGHER ASSY
B-DD-KB11-C
SCALE
SHEET OF 4
digital EQUIPMENT CORPORATION
TITLE
ROM & ADDR CONTROL
(RACL)
SIZE D
CODE CS
NUMBER M8123-Ø-1
REV B
DIST
REVISIONS
CHANGE NO
REV
CHK

75

"THIS DRAWING AND SPECIFICATIONS, HEREIN, ARE THE PROPERTY OF DIGITAL EQUIPMENT CORPORATION AND SHALL NOT BE REPRODUCED OR COPIED OR USED IN WHOLE OR IN PART AS THE BASIS FOR THE MANUFACTURE OR SALE OF ITEMS WITHOUT WRITTEN PERMISSION.
COPYRIGHT © 1975 DIGITAL EQUIPMENT CORPORATION"

	BRK	BRX	SRX	DRX	SRK	DRK	CCL	PCA	PCB	SHF	IRK	PWE	PAD	BSD	BAX	IBS	SHC	BCT	MSC	BSC	AMX	BAX	KMX	ALU	FEN	BEN	UAD	FPS	CLS	FPC	PGE
000	1	1	0	0	0	3	0	0	0	2	0	0	0	0	1	3	0	7	0	0	0	1	1	1	0	00	345	0	0	0	12
001	1	0	0	0	0	0	0	0	0	0	2	0	0	5	0	0	0	0	7	6	2	0	0	2	0	15	115	0	0	0	05
002	1	0	0	0	0	0	0	0	0	0	2	0	0	5	0	0	0	0	7	6	2	0	0	2	0	15	115	0	0	0	05
003	0	0	0	0	0	0	0	0	0	0	2	0	0	5	0	0	0	0	7	0	2	0	0	2	0	00	221	0	0	0	05
004	0	0	0	0	0	3	0	1	3	2	0	2	5	0	1	0	0	7	0	0	0	0	3	6	0	01	122	0	0	0	06
005	0	0	0	0	0	3	0	1	3	2	0	2	5	0	1	0	0	7	0	0	0	0	3	6	0	01	122	0	0	0	05
006	1	1	0	2	0	3	0	1	0	2	0	0	5	2	1	0	0	0	0	0	1	0	1	3	0	00	251	0	0	0	06
007	1	1	0	2	0	3	0	1	0	2	0	0	5	2	1	0	0	0	0	0	1	0	1	3	0	00	251	0	0	0	06
010	1	1	0	1	1	3	0	0	0	1	0	0	6	0	1	3	0	7	0	0	0	0	0	0	0	00	316	0	0	0	03
011	0	0	0	1	0	3	0	0	0	0	2	0	0	6	0	1	0	0	7	0	0	0	0	0	2	0	12	244	0	0	0	03
012	0	0	1	0	1	0	0	0	0	2	0	0	7	0	1	0	0	7	0	0	0	3	0	0	2	0	00	156	0	0	0	02
013	1	1	0	0	0	3	0	0	0	0	2	0	0	6	0	1	3	0	7	0	0	0	0	1	1	1	0	00	356	0	0	0	12
014	1	1	0	0	0	3	0	0	0	0	2	0	0	0	0	1	3	0	7	0	0	0	1	1	1	0	00	356	0	0	0	12
015	0	0	0	1	0	0	3	0	0	0	0	2	0	0	0	1	3	0	7	0	0	0	3	0	0	2	0	00	255	0	0	0	03
016	0	0	1	0	1	0	0	0	0	2	0	0	7	0	1	0	0	7	0	0	0	3	0	0	2	0	00	156	0	0	0	02
017	1	1	0	0	0	3	0	0	0	0	2	0	0	0	0	1	3	0	7	0	0	0	1	1	1	0	00	345	0	0	0	12
020	1	1	0	0	0	0	1	0	1	2	1	1	5	3	1	0	0	0	6	0	0	2	0	7	0	00	343	0	0	3	03
021	0	0	0	0	0	0	0	0	1	2	2	0	2	0	0	0	0	0	7	1	2	0	2	3	0	00	027	0	0	0	01
022	0	0	0	0	0	0	0	0	1	2	2	0	2	0	0	0	0	0	7	1	2	0	2	3	0	00	027	0	0	0	01
023	0	0	0	0	0	0	0	0	0	0	1	0	2	0	0	0	0	0	7	1	2	0	0	0	0	00	027	0	0	0	01
024	0	0	0	0	1	0	0	1	2	2	0	2	0	0	1	0	0	7	0	0	2	0	2	6	0	00	023	0	0	0	01
025	0	0	0	0	1	0	0	0	1	0	2	2	0	2	7	0	0	1	0	0	7	5	0	0	1	6	0	00	041	0	0	0	15
026	1	1	2	2	1	3	0	0	0	0	2	0	0	1	2	1	0	0	0	0	1	0	1	3	0	00	054	0	0	0	02
027	1	1	1	2	0	3	3	0	0	0	0	0	0	0	2	2	0	0	0	0	1	0	1	3	0	14	317	0	0	0	01
030	0	0	0	0	0	0	0	1	1	3	0	2	2	0	0	0	0	7	0	0	0	2	0	2	0	00	217	0	0	0	03
031	1	0	0	0	0	0	0	1	1	0	0	0	0	0	0	0	0	7	0	0	3	0	3	0	0	00	132	0	0	0	11
032	0	0	0	0	0	0	0	1	1	0	0	0	0	0	0	0	0	7	0	0	3	0	3	0	0	00	217	0	0	0	11
033	0	0	0	0	0	0	0	1	1	0	0	0	0	0	0	0	0	7	0	0	3	0	3	0	0	12	240	0	0	0	11
034	0	0	0	2	0	0	0	0	1	1	0	0	0	0	0	0	0	0	0	0	0	0	0	0	0	00	201	0	0	0	11
035	0	0	0	0	0	0	0	0	1	1	0	0	0	0	0	0	0	0	0	0	0	0	0	0	0	00	217	0	0	0	11
036	1	0	0	0	0	0	3	0	0	0	0	0	0	2	0	0	0	0	0	0	0	0	0	0	0	17	307	0	0	0	07
037	1	0	0	0	0	0	0	0	1	1	0	0	0	2	0	0	0	0	0	0	0	0	0	1	0	00	025	0	0	0	15
040	0	0	1	0	1	0	0	0	0	0	0	0	7	0	1	0	0	0	0	0	0	2	0	2	0	00	223	0	0	0	02
041	1	1	0	0	0	0	3	0	0	0	0	0	0	0	1	0	0	0	0	0	0	2	0	2	0	00	222	0	0	0	15
042	1	1	0	0	0	0	3	0	0	0	0	0	0	0	1	0	0	0	0	0	0	2	0	2	0	00	345	0	0	0	12
043	1	0	0	0	0	0	3	0	0	0	0	0	0	0	1	0	0	0	0	0	0	2	0	2	0	00	361	0	0	0	03
044	0	0	0	0	0	2	0	0	0	0	0	0	0	0	0	0	0	0	0	0	3	2	0	1	0	00	217	0	0	0	03
045	0	0	0	0	0	0	0	0	0	0	2	1	0	2	1	2	0	0	0	0	0	2	0	2	0	00	151	0	0	0	01
046	0	0	0	0	0	0	0	0	0	0	2	1	0	2	1	2	0	0	0	0	0	2	0	2	0	00	306	0	0	0	06
047	0	0	0	1	0	0	0	0	0	0	2	1	0	2	0	2	0	0	0	0	0	2	0	2	0	00	252	0	0	0	02
050	0	0	0	0	0	0	0	0	0	0	0	0	0	0	0	0	0	0	0	0	0	2	0	2	0	00	102	0	0	0	03
051	1	0	0	0	0	0	0	0	0	0	2	2	0	0	0	0	0	0	0	0	0	2	0	2	0	00	061	0	0	0	03
052	0	0	0	0	0	0	0	0	0	0	2	2	0	0	0	0	0	0	0	0	0	2	0	2	0	00	305	0	0	0	07
053	0	0	0	0	0	0	0	0	0	0	2	2	0	0	0	0	0	0	0	0	0	2	0	2	0	00	306	0	0	0	07

	BRK	BRX	SRX	DRX	SRK	DRK	CCL	PCA	PCB	SHF	IRK	PWE	PAD	BSD	BAX	IBS	SHC	BCT	MSC	BSC	AMX	BAX	KMX	ALU	FEN	BEN	UAD	FPS	CLS	FPC	PGE
054	0	0	0	0	1	0	0	0	1	2	0	0	0	0	1	0	0	0	0	0	2	3	0	3	0	00	141	0	0	0	02
056	0	0	0	0	0	3	4	0	0	2	0	0	2	0	0	0	0	0	0	0	0	2	0	6	0	00	056	0	0	0	04
057	1	0	0	0	0	0	1	1	1	0	0	0	0	0	1	0	0	7	6	0	1	1	2	6	0	01	242	0	0	0	02
060	0	0	0	0	0	3	0	0	0	2	0	0	0	0	0	0	0	3	0	0	0	3	0	0	2	0	00	102	0	0	0	08
061	0	0	0	1	1	3	4	0	0	2	0	0	0	0	0	0	0	0	0	0	0	3	0	0	2	0	00	256	0	0	0	04
062	0	0	0	0	0	3	0	0	0	2	0	0	0	0	0	0	0	0	0	0	0	3	0	0	2	0	00	052	0	0	0	07
063	0	0	0	0	0	3	0	0	0	2	0	0	0	0	0	0	0	0	0	0	0	3	0	0	2	0	00	053	0	0	0	07
064	1	0	0	0	0	0	1	0	0	2	0	0	0	0	0	0	0	0	0	0	0	3	0	7	0	00	123	0	0	0	11
065	0	0	0	0	1	0	0	0	1	1	0	0	0	0	0	0	0	0	7	2	0	0	0	0	0	00	357	0	0	0	15
066	0	0	0	1	0	1	0	0	0	2	0	0	7	0	0	0	0	0	7	0	0	0	0	0	0	00	250	0	0	0	11
067	1	0	0	0	0	0	0	0	0	2	0	0	0	0	0	0	0	0	0	0	0	3	0	0	2	0	00	271	0	0	0	11
070	0	0	0	0	0	0	0	0	0	0	0	0	6	0	0	2	0	0	0	7	0	0	0	0	0	00	174	0	0	0	14
071	0	0	0	0	1	0	0	0	0	2	0	0	0	0	0	2	0	0	0	0	0	2	0	1	3	00	070	0	0	0	14
072	0	0	0	0	0	0	0	0	0	2	1	0	0	0	0	2	0	0	0	7	0	2	0	2	0	07	337	0	0	0	14
073	0	0	0	0	0	0	0	0	0	2	0	0	6	0	2	2	0	0	0	7	5	3	0	0	2	00	303	0	0	0	14
076	0	0	0	0	1	0	0	0	0	2	0	0	0	0	2	0	0	0	0	0	0	2	0	1	3	0	00	073	0	0	0	14
076	0	0	0	0	0	0	0	0	0	2	1	0	0	0	2	0	0	0	0	0	0	2	0	0	3	0	07	337	0	0	0	14
076	0	0	0	0	0	0	0	0	0	0	1	0	0	0	2	0	0	0	0	0	0	2	0	2	0	00	015	0	0	0	14
077	0	0	0	0	0	0	0	0	0	0	2	0	0	0	0	1	0	0	0	0	0	2	0	2	0	00	130	0	0	0	14
100	0	0	0	0	0	3	0	0	0	2	0	0	0	0	1	0	0	6	0	0	0	1	0	1	0	00	356	0	0	0	12
101	1	0	0	0	0	1	3	0	0	2	0	0	0	0	1	0	0	7	0	0	0	1	0	1	0	00	316	0	0	0	02
102	1	0	0	0	0	1	3	0	0	2	0	0	0	0	1	0	0	7	0	0	0	1	0	1	0	00	246	0	0	0	08
103	0	0	0	0	1	0	0	0	0	2	0	0	0	0	0	0	0	0	0	0	0	0	0	0	2	0	00	147	0	0	0	09
104	0	0	0	0	0	0	0	0	0	2	0	0	4	0	0	0	0	0	0	0	0	2	0	6	0	00	105	0	0	0	09
105	0	0	0	1	0	1	0	0	0	2	0	0	0	0	0	0	0	0	0	0	0	0	0	6	0	00	106	0	0	0	09
106	0	0	0	1	0	1	3	0	0	2	0	0	0	0	0	0	0	0	0	0	0	0	0	6	0	00	055	0	0	0	09
107	0	0	0	1	0	1	3	0	0	2	0	0	0	0	0	0	0	3	0	0	0	0	0	0	0	00	147	0	0	0	09
110	0	0	0	0	1	0	0	0	0	0	2	0	5	0	0	0	0	0	7	4	3	0	0	2	0	15	135	0	0	0	05
111	0	0	0	0	1	0	0	0	0	0	2	0	5	0	0	0	0	0	7	6	3	0	0	2	0	15	115	0	0	0	05
112	0	0	0	0	1	0	0	0	0	0	2	0	5	0	0	0	0	0	7	7	3	0	0	2	0	00	221	0	0	0	05
113	0	0	0	0	1	1	0	0	0	0	2	0	5	0	0	0	0	0	7	7	3	0	0	2	0	00	221	0	0	0	05
114	0	0	0	0	0	1	1	3	2	0	0	2	5	0	0	0	0	0	0	0	0	3	0	7	0	01	131	0	0	0	06
115	0	0	0	0	0	1	3	0	0	0	0	0	5	0	0	0	0	0	0	0	0	3	0	7	0	01	121	0	0	0	06
116	0	0	0	0	0	1	1	0	0	0	0	0	5	0	0	0	0	0	0	0	0	3	0	0	0	00	006	0	0	0	06
117	0	0	0	0	0	0	0	0	0	0	2	0	5	0	0	0	0	0	0	0	0	3	0	0	0	00	006	0	0	0	06
120	1	1	0	0	0	0	0	0	0	2	0	0	0	0	0	3	0	6	0	7	0	0	0	0	2	02	152	0	0	0	12
121	0	1	0	0	0	0	0	0	0	2	0	0	5	0	0	0	0	0	7	6	2	0	0	2	0	15	167	0	0	0	06
122	1	0	0	0	0	0	0	0	0	2	0	0	5	0	0	0	0	0	7	7	2	0	0	2	0	15	157	0	0	0	06
123	1	1	0	0	0	0	0	0	0	2	0	0	5	0	0	0	0	0	7	7	3	0	0	2	0	00	132	0	0	0	11
124	1	1	0	0	0	3	0	0	0	2	0	0	0	0	1	0	0	7	0	0	0	1	0	1	0	00	356	0	0	0	12
125	0	0	0	0	0	0	0	0	0	2	0	0	0	0	0	0	0	0	0	0	0	2	0	2	0	16	216	0	0	0	10
126	0	0	0	0	0	0	0	0	0	2	0	0	0	0	0	0	0	0	0	0	0	2	0	2	0	12	240	0	0	0	01
127	0	0	0	0	0	0	0	0	0	2	0	0	0	0	0	0	0	0	0	0	0	2	0	2	0	02	253	0	0	0	03

130	0	0	0	0	0	0	0	0	0	0	2	0	0	0	0	1	0	0	0	0	0	2	0	2	0	00	356	0	0	0	12
131	1	0	0	0	0	0	0	0	0	0	2	0	0	0	0	1	0	0	0	0	0	2	0	2	0	00	316	0	0	0	02
132	1	0	0	0	0	0	0	0	0	0	2	0	0	0	0	1	0	0	0	0	0	2	0	2	0	00	246	0	0	0	08
133	0	0	0	0	1	0	0	0	0	2	0	0	0	0	0	0	0	0	0	0	0	0	0	0	2	0	00	147	0	0	0	09
134	0	0	0	0	0	0	0	0	0	2	0	0	4	0	0	0	0	0	0	0	0	2	0	6	0	00	105	0	0	0	09
135	0	0	0	1	0	1	0	0	0	2	0	0	0	0	0	0	0	0	0	0	0	0	0	6	0	00	106	0	0	0	09
136	0	0	0	1	0	1	3	0	0	2	0	0	0	0	0	0	0	0	0	0	0	0	0	6	0	00	055	0	0	0	09
137	0	0	0	1	0	1	3	0	0	2	0	0	0	0	0	0	0	0	0	0	0	0	0	0	0	00	147	0	0	0	09
140	0	0	0	0	0	0	0	0	0	0	2	0	0	0	0	1	0	0	0	0	0	2	0	2	0	00	102	0	0	0	08
141	0	0	0	0	0	0	0	0	0	0	2	0	0	0	0	1	0	0	0	0	0	2	0	2	0	00	256	0	0	0	04
142	0	0	0	0	0	0	0	0	0	0	2	0	0	0	0	1	0	0	0	0	0	2	0	2	0	00	052	0	0	0	07
143	0	0	0	0	0	0	0	0	0	0	2	0	0	0	0	1	0	0	0	0	0	2	0	2	0	00	053	0	0	0	07
144	1	0	0	0	0	0	0	0	0	0	2	0	0	0	0	1	0	0	0	0	0	2	0	2	0	00	123	0	0	0	11
145	0	0	0	0	0	0	0	0	0	0	2	0	0	0	0	1	0	0	0	0	0	2	0	2	0	00	357	0	0	0	15
146	0	0	0	0	0	0	0	0	0	0	2	0	0	0	0	1	0	0	0	0	0	2	0	2	0	00	250	0	0	0	11
147	1	0	0	0	0	0	0	0	0	0	2	0	0	0	0	1	0	0	0	0	0	2	0	2	0	00	271	0	0	0	11
150	0	0	0	0	0	0	0	0	0	0	2	0	0	0	0	1	0	0	0	0	0	2	0	2	0	00	174	0	0	0	14
151	0	0	0	0	0	0	0	0	0	0	2	0	0	0	0	1	0	0	0	0	0	2	0	2	0	00	070	0	0	0	14
152	0	0	0	0	0	0	0	0	0	0	2	0	0	0	0	1	0	0	0	0	0	2	0	2	0	00	337	0	0	0	14
153	0	0	0	0	0	0	0	0	0	0	2	0	0	0	0	1	0	0	0	0	0	2	0	2	0	00	303	0	0	0	14
156	0	0	0	0	0	0	0	0	0	0	2	0	0	0	0	1	0	0	0	0	0	2	0	2	0	00	073	0	0	0	14
157	0	0	0	0	0	0	0	0	0	0	2	0	0	0	0	1	0	0	0	0	0	2	0	2	0	00	337	0	0	0	14
160	0	0	0	0	0	0	0	0	0	0	2	0	0	0	0	1	0	0	0	0	0	2	0	2	0	00	015	0	0	0	14
161	0	0	0	0	0	0	0	0	0	0	2	0	0	0	0	1	0	0	0	0	0	2	0	2	0	00	130	0	0	0	14

162	0	0	0	0	0	0	0	0	0	0	2	0	0	0	0	1	0	0	0	0	0	2	0	2	0	00	356	0	0	0	12
163	1	0	0	0	0	0	0	0	0	0	2	0	0	0	0	1	0	0	0	0	0	2	0	2	0	00	316	0	0	0	02
164	0	0	0	0	0	0	0	0	0	0	2	0	0	0	0	1	0	0	0	0	0	2	0	2	0	00	246	0	0	0	08
165	0	0	0	0	0	0	0	0	0	0	2	0	0	0	0	1	0	0	0	0	0	2	0	2	0	00	147	0	0	0	09
166	0	0	0	0	0	0	0	0	0	0	2	0	0	0	0	1	0	0	0	0	0	2	0	2	0	00	105	0	0	0	09
167	0	0	0	0	0	0	0	0	0

THIS DRAWING AND SPECIFICATIONS, HEREIN, ARE THE PROPERTY OF DIGITAL EQUIPMENT CORPORATION AND SHALL NOT BE REPRODUCED OR COPIED OR USED IN WHOLE OR IN PART AS THE BASIS FOR THE MANUFACTURE OR SALE OF ITEMS WITHOUT WRITTEN PERMISSION.
COPYRIGHT © 1972, DIGITAL EQUIPMENT CORPORATION

	BAR	BRE	BRX	DRX	SRR	DRR	CCL	PCA	PCB	EMP	IRR	PME	PAD	BBD	BAX	IBB	SHC	BCT	MSC	BSC	AMX	BMX	KMX	ALU	FEN	BEN	UAD	FPB	CLB	FPC	PGE
130	0	0	0	0	1	3	0	0	0	2	0	0	0	0	1	0	0	0	0	7	6	3	0	0	2	0	13	109	0	0	0	12
131	0	0	0	0	0	1	0	0	0	0	2	0	0	0	0	0	0	0	1	6	7	3	0	0	2	0	15	177	0	0	0	06
132	0	0	0	0	0	0	0	0	0	0	2	0	0	0	0	0	0	0	0	6	7	3	0	0	2	0	00	217	0	0	0	11
133	1	1	0	0	0	0	0	0	0	0	2	0	0	0	3	0	0	1	6	7	0	0	0	0	2	0	17	113	0	0	1	04
134	0	0	0	0	0	3	0	0	1	2	2	0	0	2	0	0	0	0	7	6	0	3	0	0	2	0	00	230	0	0	0	14
135	0	0	0	0	0	0	0	1	0	0	2	0	0	2	0	0	0	0	7	6	0	3	0	0	2	0	00	137	0	0	0	05
136	0	0	0	0	0	0	0	0	0	0	2	0	0	0	0	0	0	0	7	6	0	3	0	0	2	0	12	240	0	0	0	07
137	1	0	0	0	0	0	0	0	0	0	2	0	0	0	0	0	0	0	1	6	0	3	0	0	2	0	00	377	0	0	0	06
140	1	1	0	0	0	3	0	0	0	0	2	0	0	0	0	1	2	0	0	7	6	0	0	1	1	0	00	102	0	0	0	16
141	0	1	0	0	0	0	0	0	0	0	2	0	0	0	0	0	0	0	7	6	1	3	0	0	2	0	00	142	0	0	0	02
142	1	0	0	0	0	0	0	0	0	0	2	0	0	0	0	0	0	0	7	6	1	3	0	0	2	0	14	317	0	0	0	02
143	0	0	0	0	0	0	0	0	0	0	2	0	0	0	0	0	0	0	1	6	0	3	0	0	2	0	00	146	0	0	0	03
144	0	0	0	0	0	0	0	0	0	0	2	0	0	0	0	0	0	0	0	6	0	3	0	0	2	0	04	353	0	0	0	10
145	0	1	0	0	0	0	0	0	0	0	2	0	0	0	0	0	0	0	0	6	0	3	0	0	2	0	00	166	0	0	0	09
146	1	1	0	0	0	0	0	0	0	0	2	0	0	0	0	0	0	0	0	6	0	3	0	0	2	0	00	377	0	0	0	02
147	1	0	0	0	0	0	0	0	0	0	2	0	0	0	0	0	0	0	1	6	0	3	0	0	2	0	10	346	0	0	0	06
150	1	1	0	0	0	0	0	0	0	2	0	2	5	5	0	0	0	0	1	6	0	3	0	0	2	0	00	248	0	0	0	13
151	0	0	0	0	0	0	0	0	0	0	2	0	0	0	0	0	0	0	0	6	0	3	0	0	2	0	00	146	0	0	0	01
152	0	1	0	0	0	0	0	0	0	0	2	0	0	0	0	0	0	0	1	6	0	3	0	0	2	0	00	208	0	0	0	12
153	1	1	0	0	0	0	0	0	0	0	2	0	0	0	0	0	0	0	0	6	0	3	0	0	2	0	00	246	0	0	0	04
154	1	1	0	0	0	1	0	0	0	0	2	0	0	0	0	0	0	0	0	6	0	3	0	0	2	0	00	340	0	0	0	12
155	1	0	0	0	0	0	0	0	0	0	2	0	0	0	0	0	0	0	0	6	0	3	0	0	2	0	00	312	0	0	0	05
156	0	0	0	0	0	0	0	0	0	0	2	0	0	0	0	0	0	0	0	6	0	3	0	0	2	0	00	212	0	0	0	02
157	0	0	0	0	0	0	0	0	0	0	2	0	0	0	0	0	0	0	1	6	0	3	0	0	2	0	00	331	0	0	0	06
160	0	0	0	0	0	1	0	0	0	0	2	0	0	5	0	1	0	0	0	7	6	0	3	0	1	1	0	0	00	344	0	0	0	12
161	0	0	0	0	0	0	0	0	0	0	2	0	0	0	0	0	0	0	0	6	0	3	0	0	2	0	00	231	0	0	0	06
162	0	0	0	0	0	0	0	0	0	0	2	2	0	0	0	0	0	0	0	6	0	3	0	0	2	0	00	231	0	0	0	10
163	0	0	0	0	0	0	0	0	0	0	2	2	0	0	0	0	0	0	0	6	0	3	0	0	2	0	00	132	0	0	0	11
164	0	1	0	0	0	0	0	0	0	0	2	2	1	0	0	0	0	1	0	7	6	0	3	0	0	2	0	0	00	340	0	0	0	01
165	1	0	0	0	0	0	0	0	0	0	2	2	0	0	0	0	0	0	1	6	0	3	0	0	2	0	00	232	0	0	0	07
166	0	1	0	0	0	0	0	0	0	0	2	2	0	0	0	0	0	0	0	6	0	3	0	0	2	0	00	132	0	0	0	07
167	1	1	0	0	0	0	0	0	0	0	2	2	0	0	0	0	0	0	1	6	0	3	0	0	2	0	00	370	0	0	0	14
170	1	1	0	0	0	0	0	0	0	0	2	0	0	0	0	1	0	0	0	7	6	0	3	0	1	1	0	0	00	370	0	0	0	14
171	0	0	0	0	0	0	0	0	0	0	2	0	0	0	0	0	0	0	0	6	0	3	0	0	2	0	00	231	0	0	0	06
172	0	0	0	0	0	0	0	0	0	0	2	0	0	0	0	0	0	0	1	6	0	3	0	0	2	0	00	217	0	0	0	02
173	0	0	0	0	0	0	0	0	0	0	2	0	0	0	0	0	0	0	0	6	0	3	0	0	2	0	07	333	1	0	0	04
174	1	1	0	0	0	0	0	0	0	0	2	0	0	0	0	0	0	0	0	6	0	3	0	0	2	0	00	136	0	0	0	14
175	1	1	0	0	0	0	0	0	0	0	2	0	0	0	0	0	0	0	0	6	0	3	0	0	2	0	05	137	0	0	0	05
176	1	0	1	0	0	0	0	0	0	0	2	0	0	0	0	0	0	0	0	6	0	3	0	0	2	0	03	136	0	0	0	07
177	1	0	1	0	0	0	0	0	0	0	2	0	0	0	0	0	0	0	1	6	0	3	0	0	2	0	05	137	0	0	0	06
200	0	0	0	0	0	0	0	0	0	0	2	0	0	0	0	0	0	0	0	7	6	0	3	0	0	2	0	0	00	352	0	0	0	12
201	1	0	0	0	0	0	0	0	0	0	2	0	0	0	0	0	0	0	1	6	0	3	0	0	2	0	00	274	0	0	0	11
202	0	0	0	0	0	0	0	0	0	0	2	0	0	0	0	0	0	0	0	6	0	3	0	0	2	0	00	230	0	0	0	04
203	0	0	0	0	0	0	0	0	0	0	2	0	0	0	0	0	0	0	1	6	0	3	0	0	2	0	00	330	0	0	0	06

	BAR	BRE	BRX	DRX	SRR	DRR	CCL	PCA	PCB	EMP	IRR	PME	PAD	BBD	BAX	IBB	SHC	BCT	MSC	BSC	AMX	BMX	KMX	ALU	FEN	BEN	UAD	FPB	CLB	FPC	PGE
206	1	0	0	0	0	0	0	0	0	0	2	0	0	0	0	1	0	0	0	6	0	3	0	0	2	0	00	205	0	0	0	04
205	0	0	0	0	0	0	0	1	0	0	2	0	0	1	0	0	0	0	0	7	6	0	3	0	0	2	0	12	240	0	0	0	04
206	1	0	0	0	0	0	0	0	0	0	2	0	0	0	0	0	0	0	0	7	6	0	3	0	0	2	0	00	310	0	0	0	08
207	0	0	0	0	0	0	0	0	0	0	2	0	0	0	0	0	0	0	0	7	6	0	3	0	0	2	0	12	240	0	0	0	07
210	0	0	0	0	0	0	0	1	1	0	2	2	0	1	0	0	0	0	1	6	0	3	0	0	2	0	00	217	0	0	0	03
211	1	1	0	0	0	0	0	0	0	0	2	2	0	0	0	0	0	0	0	7	6	0	3	0	0	2	0	17	113	0	0	1	04
212	1	1	0	0	0	0	0	0	0	0	2	2	0	0	0	0	0	0	0	7	6	0	3	0	0	2	0	00	212	0	0	0	02
213	0	0	0	0	0	0	0	0	0	0	2	2	0	0	0	0	0	0	1	7	6	0	3	0	0	2	0	00	214	0	0	0	02
214	1	1	0	0	0	0	0	0	0	0	2	0	2	7	2	0	0	0	0	0	0	0	0	1	1	0	00	215	0	0	0	03
215	0	0	0	0	0	0	0	0	0	0	2	1	0	2	0	0	0	0	0	0	0	0	0	1	1	0	00	172	0	0	0	02
216	1	0	0	0	0	0	0	0	0	0	2	0	0	2	0	0	0	0	0	3	0	0	0	1	1	0	00	256	0	0	0	10
217	0	0	0	0	0	0	0	0	0	0	2	1	0	2	0	0	0	0	0	3	0	0	0	1	1	0	00	146	0	0	0	01
220	0	0	0	0	0	0	0	1	0	0	2	0	2	0	0	0	0	0	0	6	0	3	0	0	2	0	04	165	0	0	0	10
221	1	1	0	0	0	0	0	0	0	0	2	0	2	0	0	0	0	0	0	7	6	0	3	0	0	2	0	00	233	0	0	0	05
222	0	0	0	0	0	0	0	0	0	0	2	0	2	0	0	0	0	0	0	7	6	0	3	0	0	2	0	00	300	0	0	0	13
223	0	0	0	0	0	0	0	0	0	0	2	0	2	0	0	0	0	0	0	7	6	0	3	0	0	2	0	00	226	0	0	0	02
224	1	1	0	0	0	0	0	0	0	0	2	0	0	5	2	0	0	0	0	0	0	0	0	1	1	0	00	375	0	0	0	02
225	0	1	0	0	0	0	0	0	0	0	2	0	0	5	0	0	0	0	0	0	0	0	0	1	1	0	10	225	0	1	0	15
226	1	0	0	0	0	0	0	0	0	0	2	0	0	2	4	0	0	0	0	7	6	0	3	0	0	2	0	00	310	0	0	0	08
227	0	0	0	0	0	0	0	0	0	0	2	0	0	0	0	0	0	0	0	7	6	0	3	0	0	2	0	12	240	0	0	0	07
230	0	1	0	0	0	0	0	0	0	0	2	0	0	0	0	2	0	0	0	2	0	0	0	0	2	0	00	170	0	0	0	14
231	1	1	0	0	0	0	0	0	0	0	2	0	0	0	0	0	0	0	0	6	0	3	0	0	2	0	00	232	0	0	0	06
232	0	0	0	0	0	0	0	0	0	0	2	0	0	0	0	0	0	0	0	6	0	3	0	0	2	0	04	241	0	0	0	08
233	0	0	0	0	0	0	0	0	0	0	2	0	0	0	0	0	0	0	1	6	0	3	0	0	2	0	00	311	0	0	0	06
234	0	1	0	0	0	0	0	0	0	0	2	2	0	2	2	0	0	0	0	7	6	0	3	0	0	2	0	12	240	0	0	0	02
235	1	1	0	0	0	0	0	0	0	0	2	2	0	2	2	0	0	0	0	7	6	0	3	0	0	2	0	00	234	0	0	0	02
236	1	1	0	0	0	0	0	0	0	0	2	2	0	2	2	0	0	0	0	7	6	0	3	0	0	2	0	00	276	0	0	0	10
237	0	1	0	0	0	0	0	0	0	0	2	2	0	2	2	0	0	0	0	7	6	0	3	0	0	2	0	12	240	0	0	0	14
240	0	1	0	0	0	0	0	0	0	0	2	2	0	0	0	0	0	0	0	7	6	0	3	0	0	2	0	00	352	0	0	0	12
241	1	1	0	0	0	0	0	0	0	0	2	2	0	0	0	0	0	0	0	7	6	0	3	0	0	2	0	00	103	0	0	0	09
242	0	1	0	0	0	0	0	0	0	0	2	2	0	0	0	0	0	0	0	6	0	3	0	0	2	0	00	262	0	0	0	02
243	1	1	0	0	0	0	0	0	0	0	2	2	0	0	0	0	0	0	1	6	0	3	0	0	2	0	00	107	0	0	0	04
244	1	1	0	0	0	0	0	0	0	0	2	2	0	0	0	0	0	0	0	7	6	0	3	0	0	2	0	12	127	0	0	0	01
245	0	1	0	0	0	0	0	0	0	0	2	2	0	0	0	0	0	0	0	6	0	3	0	0	2	0	00	252	0	0	0	13
246	1	0	0	0	0	0	0	0	0	0	2	2	0	0	0	0	0	0	1	6	0	3	0	0	2	0	11	206	0	0	0	08
247	0	0	0	0	0	0	0	0	0	0	2	2	0	0	0	0	0	0	0	6	0	3	0	0	2	0	03	136	0	0	0	07
250	0	0	0	0	0	0	0	1	0	0	2	0	2	0	0	0	0	0	0	7	6	0	3	0	0	2	0	00	222	0	0	0	11
251	0	0	0	0	0	0	0	0	0	0	2	0	2	0	0	0	0	0	0	6	0	3	0	0	2	0	00	122	0	0	0	06
252	0	0	0	0	0	0	0	0	0	0	2	0	2	0	0	0	0	0	0	7	6	0	3	0	0	2	0	00	235	0	0	0	02
253	0	0	0	0	0	0	0	0	0	0	2	0	2	0	0	0	0	0	0	7	6	0	3	0	0	2	0	13	100	0	0	0	12
254	0	0	0	0	0	0	0	0	0	0	2	0	2	0	0	0	0	0	0	6	0	3	0	0	2	0	02	232	0	0	0	09
255	1	0	0	0	0	0	0	0	0	0	2	0	2	0	0	0	0	0	0	6	0	3	0	0	2	0	00	376	0	0	0	03
256	1	0	0	0	0	0	0	0	0	0	2	0	2	0	0	0	0	0	0	6	0	3	0	0	2	0	04	350	0	0	0	10
257	0	0	0	0	0	0	0	0	0	0	2	0	2	0	0	0	0	0	0	6	0	3	0	0	2	0	03	126	0	0	0	07

REVISIONS		
CHK	CHANGE NO.	REV

TITLE	SIZE	CODE	NUMBER	REV
ROM & ADDR. CONTROL	D	CS	M8123-Ø-1	B
SCALE	SHEET 13 OF 14	DIST.		

DEC FORM NO 1303 139

DCS M8123-Ø-1 B

77

"THIS DRAWING AND SPECIFICATIONS, HEREIN, ARE THE PROPERTY OF DIGITAL EQUIPMENT CORPORATION AND SHALL NOT BE REPRODUCED OR COPIED OR USED IN WHOLE OR IN PART AS THE BASIS FOR THE MANUFACTURE OR SALE OF ITEMS WITHOUT WRITTEN PERMISSION.
COPYRIGHT © 1975 DIGITAL EQUIPMENT CORPORATION"

	BAK	BRX	SRX	DRX	SRH	DRH	CCL	PCA	PCB	SHF	IRH	PWE	PAD	BSD	BAX	IBS	SHC	BCT	MSC	BSC	AMX	BMX	KMX	ALU	FEN	BEN	UAD	FPS	CLS	FPC	PGE
260	1	1	0	0	0	0	0	1	1	2	1	0	0	3	1	0	0	0	6	0	1	0	1	3	0	00	343	0	0	3	01
261	0	0	1	3	1	0	0	0	0	2	0	0	4	0	1	0	0	0	0	0	2	0	0	2	0	00	104	0	0	0	04
262	0	0	0	0	0	0	0	0	0	2	0	0	2	0	0	1	0	0	7	0	2	0	0	6	0	12	240	0	0	0	02
263	0	0	0	0	0	0	0	1	0	0	2	0	0	0	0	0	0	0	0	0	3	0	0	2	0	00	145	0	0	0	04
264	0	0	0	0	0	0	0	0	0	2	0	0	0	0	0	0	0	1	6	0	0	0	0	2	0	00	011	0	0	0	03
265	1	1	0	0	0	0	0	0	0	0	2	3	0	0	0	0	0	0	7	4	0	0	0	0	2	0	00	362	0	0	0	13
266	1	0	0	0	0	0	1	1	4	0	0	0	3	0	0	0	1	0	0	0	3	2	0	0	3	0	11	206	0	0	0	08
267	0	0	0	0	1	1	1	1	0	0	3	3	0	2	0	0	0	1	0	6	0	2	0	0	2	0	03	227	0	0	0	07
270	0	0	0	0	3	1	0	0	1	0	0	2	0	0	0	0	2	0	0	0	0	3	0	0	2	0	00	230	0	0	0	14
271	1	0	0	0	0	0	0	1	0	0	2	2	0	0	0	0	0	0	0	0	0	3	0	0	2	0	05	123	0	0	0	11
272	0	0	0	0	0	0	0	1	0	0	2	2	0	0	0	0	0	0	0	0	0	2	0	0	2	0	00	104	0	0	0	09
273	0	0	0	0	0	0	3	0	0	0	2	2	0	0	0	0	1	0	0	0	0	2	0	0	2	0	00	011	0	0	0	03
274	0	0	0	0	0	0	0	0	0	0	2	2	7	0	0	0	0	0	0	0	0	0	1	6	0	00	275	0	0	0	11
275	0	0	0	0	0	0	0	0	0	0	2	2	0	0	0	0	5	7	5	3	0	0	0	2	0	00	032	0	0	0	11
276	1	0	0	0	0	0	0	0	0	0	2	2	0	0	0	0	0	6	0	3	0	0	0	2	0	00	351	0	0	0	10
277	0	0	0	0	0	1	0	1	0	0	3	0	2	0	0	1	0	0	6	0	2	0	0	2	0	03	237	0	0	0	07
300	0	0	0	0	0	0	0	0	0	0	2	2	0	0	0	0	3	0	0	4	5	3	0	0	0	00	217	0	0	0	13
301	0	0	0	0	0	1	0	0	0	0	2	1	0	0	0	0	0	7	0	0	0	0	0	7	0	00	210	0	0	0	03
302	0	0	0	0	0	0	0	0	0	0	1	0	0	0	0	0	0	0	0	0	0	0	0	0	0	00	352	0	0	0	12
303	0	0	0	0	0	0	3	0	0	0	2	0	0	0	0	3	2	0	0	0	5	3	0	0	2	0	00	230	0	0	0	14
304	1	0	1	0	0	0	1	0	0	0	2	2	0	0	0	0	7	0	0	0	0	0	0	6	2	0	06	256	0	0	0	11
305	0	0	0	0	0	0	0	1	0	0	2	2	0	0	0	0	0	1	0	6	0	2	0	0	2	0	03	217	0	0	0	07
306	0	0	0	0	0	0	0	0	0	0	2	2	0	0	0	0	0	1	0	6	0	2	0	0	2	0	03	207	0	0	0	07
307	1	1	0	0	0	0	0	0	0	0	2	2	0	0	0	0	1	0	0	6	0	2	0	0	2	0	00	237	0	0	1	13
310	0	0	0	0	0	0	0	0	0	0	2	2	4	0	1	0	0	0	7	6	2	0	0	2	2	0	12	240	0	0	0	08
311	1	0	0	0	0	0	0	1	0	0	2	2	6	0	1	0	0	0	7	6	2	0	0	2	2	15	157	0	0	0	06
312	0	0	0	0	0	0	0	0	0	0	2	2	5	0	1	0	0	0	7	6	2	0	0	2	2	0	12	240	0	0	0	05
313	0	0	0	0	0	0	0	1	0	0	2	2	0	0	0	0	0	0	0	6	2	0	0	2	2	0	05	145	0	0	0	04
314	0	0	0	0	0	0	0	0	0	0	2	2	0	0	0	0	0	0	0	3	2	3	0	0	2	0	00	377	0	0	1	02
315	1	0	0	0	0	0	0	1	0	0	2	2	0	0	0	0	0	0	0	0	0	0	0	0	2	0	00	302	0	0	0	12
316	0	0	0	0	0	0	0	0	0	0	2	2	0	0	0	0	0	0	0	0	0	0	0	0	2	0	00	126	0	0	0	03
317	0	0	0	0	0	0	0	0	0	0	2	2	0	0	0	0	0	0	0	0	0	0	0	0	2	0	00	143	0	0	0	02
320	0	0	0	0	0	0	0	0	0	0	2	2	0	0	0	0	7	0	0	4	0	0	0	0	2	0	00	217	0	0	0	01
321	1	1	0	0	0	0	0	0	0	0	2	2	0	0	0	0	6	6	0	4	0	0	0	0	2	0	00	343	0	0	0	01
322	1	1	0	0	0	0	0	0	0	0	2	2	0	0	0	0	0	0	0	4	0	0	0	0	2	0	00	343	0	0	0	01
323	1	1	0	0	0	0	0	0	0	0	2	2	0	0	0	0	1	0	0	4	0	0	0	0	2	0	03	125	0	0	0	04
324	1	1	0	0	0	0	0	0	0	0	2	2	0	0	0	0	7	0	0	4	0	0	0	0	2	0	00	343	0	0	0	01
325	0	0	0	0	0	0	0	0	0	0	2	2	0	0	0	0	6	6	0	4	0	0	0	0	2	0	00	217	0	0	0	01
326	0	0	0	0	0	0	0	0	0	0	2	2	0	0	0	0	0	0	0	4	0	0	0	0	2	0	00	217	0	0	0	01
327	0	0	0	0	0	0	0	0	0	0	2	2	0	0	0	0	1	1	0	4	0	0	0	0	2	0	17	307	0	0	0	13
330	0	0	0	0	0	0	0	0	0	0	2	2	0	0	0	0	7	3	1	1	2	0	0	3	0	00	217	0	0	0	01
331	0	0	0	0	0	0	0	0	0	0	2	2	0	0	0	0	6	7	6	0	2	2	0	6	2	0	12	240	0	0	0	01
332	0	0	0	0	0	0	0	0	0	0	2	2	0	0	0	0	0	0	0	0	2	2	0	6	2	0	12	240	0	0	0	01
333	1	0	1	0	0	0	0	0	0	0	2	2	0	0	0	0	0	0	0	0	2	2	0	6	2	0	00	366	0	0	0	04

	BAK	BRX	SRX	DRX	SRH	DRH	CCL	PCA	PCB	SHF	IRH	PWE	PAD	BSD	BAX	IBS	SHC	BCT	MSC	BSC	AMX	BMX	KMX	ALU	FEN	BEN	UAD	FPS	CLS	FPC	PGE
336	0	0	0	0	0	0	0	0	0	2	1	0	0	0	1	0	0	3	7	0	2	2	0	6	0	12	240	0	0	0	01
335	0	0	0	0	0	0	0	0	1	1	2	0	0	0	0	0	0	0	7	6	0	1	1	3	3	0	00	217	0	0	0	01
336	0	0	0	0	0	0	0	0	1	1	2	0	0	0	0	1	0	0	7	6	0	1	1	3	3	0	00	217	0	0	0	01
337	0	0	0	2	0	3	0	0	0	1	1	0	0	5	0	2	0	0	0	0	0	0	0	0	0	00	230	0	0	0	14
340	0	0	0	0	0	0	0	0	1	0	2	0	0	0	6	0	2	0	0	0	7	0	3	0	0	0	2	0	0	00	341	0	0	0	12
341	1	1	0	0	0	0	0	0	0	1	0	0	0	0	3	2	0	0	0	0	0	0	0	0	0	0	0	0	0	00	215	0	0	0	12
342	1	1	0	0	0	0	0	0	0	1	0	0	0	0	3	2	0	0	0	0	0	0	0	0	2	0	00	225	0	0	0	13
343	0	0	2	2	1	3	0	0	1	0	1	0	0	1	0	1	0	0	0	5	0	1	0	0	1	0	00	377	0	1	2	01
344	0	0	0	0	0	0	0	0	0	0	2	0	2	7	0	0	1	0	0	0	0	0	0	0	1	3	0	00	140	0	0	0	12
345	0	0	0	0	0	0	3	0	0	0	2	0	0	0	0	0	0	0	0	0	0	0	0	0	0	5	0	00	356	0	0	0	12
346	1	1	0	0	0	0	2	0	0	0	2	0	0	0	0	1	0	0	0	1	0	0	0	0	0	6	0	00	313	0	0	0	09
347	1	1	0	0	0	0	0	0	0	0	2	0	0	0	0	1	0	0	1	0	0	0	0	0	2	0	00	150	0	1	2	13
350	0	0	0	0	0	0	0	0	0	0	2	0	2	0	0	0	0	0	6	0	0	0	0	2	0	00	166	0	0	0	10
351	0	0	1	0	0	1	0	0	0	0	2	0	0	0	0	0	0	0	6	0	0	0	0	2	0	00	220	0	0	0	10
352	1	1	0	0	0	1	0	0	0	0	2	0	0	0	0	0	0	0	0	0	0	0	0	2	0	00	130	0	0	0	12
353	1	0	0	0	1	0	0	1	0	0	2	0	0	1	0	0	0	0	0	0	0	1	0	2	0	00	145	0	0	0	10
354	0	0	0	0	0	0	0	1	0	0	2	0	0	0	6	0	3	0	0	0	0	0	0	2	0	00	355	0	0	0	12
355	0	1	0	0	0	0	0	0	0	0	2	0	0	0	6	0	3	0	0	0	0	0	0	2	0	00	065	0	0	0	12
356	0	1	0	0	0	0	0	0	0	0	2	0	0	0	6	0	3	0	0	0	0	0	0	2	0	00	154	0	0	0	12
357	0	1	0	0	0	0	3	0	0	1	1	0	0	0	6	0	3	0	0	0	0	0	0	2	0	00	360	0	0	0	13
360	1	0	0	0	0	0	0	0	0	0	2	0	0	0	7	0	0	0	0	0	2	0	0	0	2	0	00	376	0	0	0	13
361	0	0	0	0	0	0	0	0	0	0	2	0	0	0	7	0	0	0	0	0	2	0	0	0	2	0	00	260	0	0	0	03
362	1	1	0	0	0	0	0	0	0	0	2	0	0	0	7	0	0	0	0	0	2	0	0	0	3	0	07	367	0	0	0	13
363	1	1	0	0	0	0	2	0	0	0	2	0	0	0	0	0	0	0	1	0	0	0	0	1	3	0	03	125	0	0	0	04
364	0	0	0	0	0	0	0	0	0	0	2	0	0	0	0	1	0	0	0	0	0	0	0	2	0	00	364	0	0	0	00
365	0	0	0	0	0	0	0	0	0	0	2	0	2	5	0	1	0	0	0	7	0	0	3	0	0	0	12	240	0	0	0	04
366	1	0	0	0	0	0	0	0	0	0	2	0	0	0	0	0	0	0	1	0	0	0	0	2	0	00	313	0	0	0	09
367	1	1	0	0	0	0	0	0	0	1	2	0	0	0	1	0	0	0	1	0	0	0	0	2	0	10	342	0	1	0	13
370	0	0	0	0	0	0	0	0	0	0	2	0	4	0	0	0	0	0	6	0	3	0	0	0	0	00	351	0	0	0	10
371	0	0	0	0	0	0	0	0	0	0	2	0	4	0	0	0	0	0	6	0	3	0	0	0	0	00	350	0	0	0	10
372	0	0	0	0	0	0	0	0	0	0	2	0	4	0	0	0	0	0	6	0	3	0	0	0	0	00	315	0	0	0	12
373	0	0	0	0	0	0	0	0	0	0	2	0	4	0	0	0	0	0	6	0	3	0	0	0	0	12	240	0	0	0	01
374	0	0	0	0	0	0	0	0	1	0	2	0	0	0	1	0	0	0	2	0	0	0	0	2	0	10	334	0	1	0	03
375	0	0	0	0	0	0	0	0	1	0	2	0	0	0	0	0	0	0	6	0	0	0	0	2	0	00	217	0	0	0	02
376	0	0	0	0	0	0	0	0	1	0	2	0	0	0	0	0	0	0	6	0	0	0	0	2	0	00	037	0	0	0	13
377	0	0	0	0	0	0	0	0	1	0	2	0	0	0	0	0	0	0	6	0	0	0	0	2	0	00	230	0	0	0	14

REVISIONS									
ONE	CHANGE NO.	REV.							

TITLE	ROM & ADDR. CONTROL								
SIZE	CODE	NUMBER	REV						
D	CS	M8123-Ø-1	B						
SCALE		SHEET 14 OF 14							
DIST.									

M8123-Ø-1 B
SIZE D CODE DCS

NOTES:
1. UNLESS OTHERWISE NOTED RESISTANCE IS IN Ω AND CAPACITANCE IS IN PICOFARADS. CAPS. WITHOUT VALUE NOTED .01 MFD

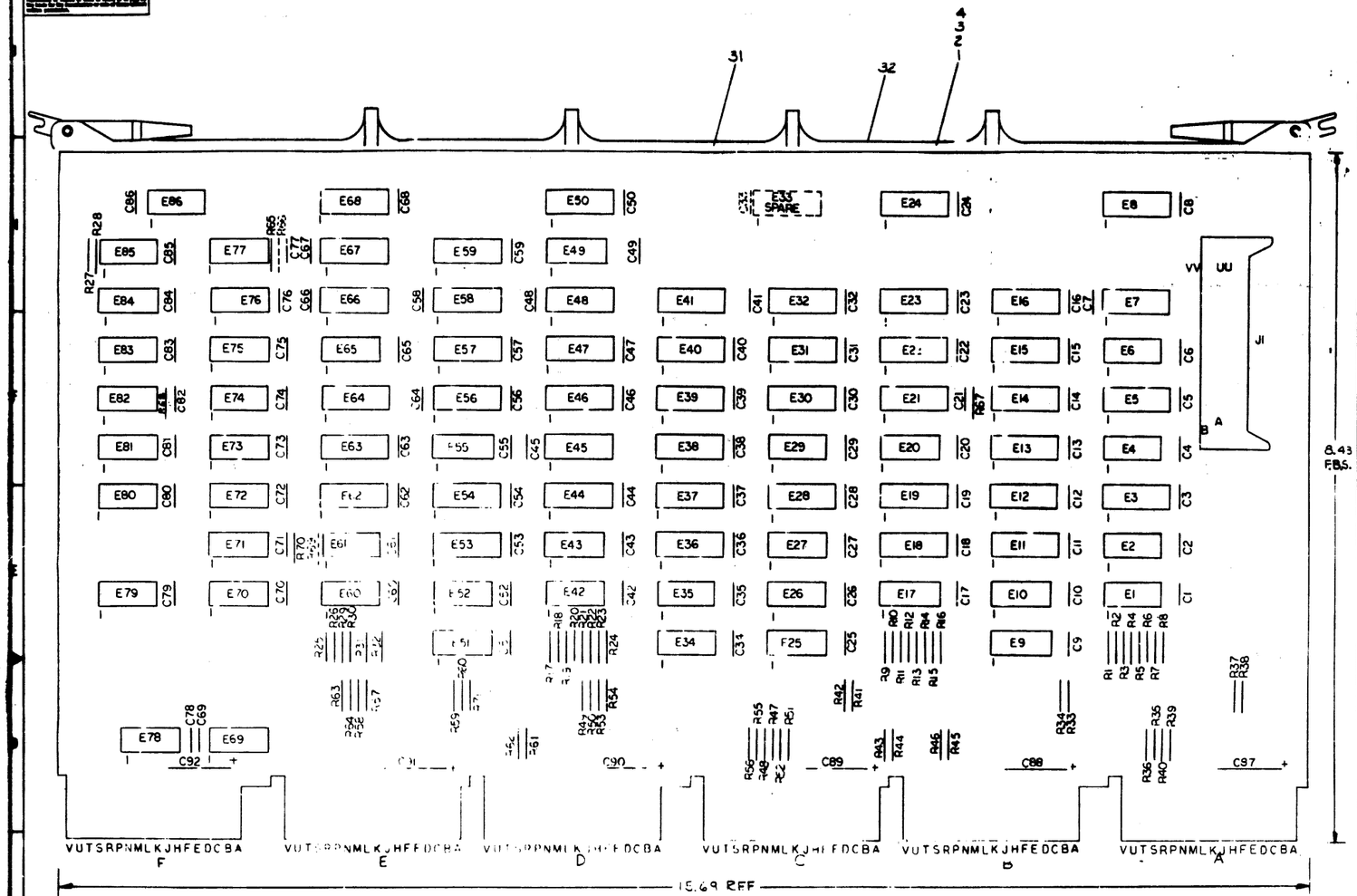

AA2, AV1, BA2, BV1, CA2, CV1, DA2, DV1, EA2, EV1, FA2, FV2

AC2, AN2, AH1, AT1, BC2, BN2, BT1, CC2, CN2, CH1, CT1, DC2, DN2, DH1, DT1, EC2, EN2, ET1, FC2, FN2, FH1, FT1

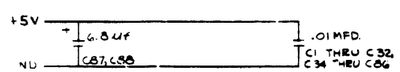

QTY	REF DESIGNATION	DESCRIPTION	PART NO.	REF NO.
		PARTS LIST		
		ETCH BOARD REV C		
1		MODULE ECO HISTORY	[redacted]	3
REF		ASSY/DRILLING HOLE LAYOUT	[redacted]	2
REF		X-Y COORDINATE HOLE LOCATION	[redacted]	1
1		HANDLE, MODULE	E-FS-1210711-2	32
12		EYELET	9006732	31
1	J1	CONN 40PIN BERG	1209941	30
2	E47, E59	IC DEC 74175	1910651	29
4	E5, E24, E50, E68	IC DEC 7485	1910284	28
12	E11, E13, E15, E18 E22, E36 E38, E45, E63, E57, E43, E67	IC DEC 745174	1910550	27
1	E31	IC DEC 745157	1910548	26
24	E3, E5, E7, E12, E14, E16, E19, E21, E23, E28 E30, E32, E37, E39, E41, E44 E46, E48, E54, E56, E58, E62, E64, E66	IC DEC 745153	1910547	25
7	E6, E49, E69, E80, E82, E83, E85	IC DEC 74S74	1910544	24
1	E 79	IC DEC 74S40	1910541	23
1	E 71	IC DEC 74S20	1910539	22
8	E4 E10, E29, E35, E52, E55, E65 E75	IC DEC 74S04	1910534	21
2	E20, E77	IC DEC 74S11	1910537	20
3	E70, E73, E86	IC DEC 74S10	1910536	19
1	E72	IC DEC 74S00	1910532	18
1	E40	IC DEC 9318	1910454	17
8	E9, E17, E25, E34, E51, E78, E81, E84	IC DEC 74H01	1909849	16
4	E1, E26, E42, E60	IC DEC 8881	1909705	15
4	E2, E27, E43, E61	IC DEC 380	1909685	14
1	E74	IC DEC 74H50	1909060	13
1	E76	IC DEC 74H40	1905586	12
1	R68	RESISTOR 390Ω, ¼W, 5%	1300309	11
1	R67	RESISTOR 180Ω, ¼W, 5%	1301322	10
3	R65, R70, R71	RESISTOR 150Ω, ¼W, 5%	1300250	9
32	R1, R3, R5, R7, R9, R11, R13, R15, R17, R19, R21, R23, R25, R27, R29, R31, R33, R35, R37, R39, R41, R43, R45, R47, R49, R51, R53, R55, R57, R59, R61, R63	RESISTOR 330Ω, ¼W, 5%	1300295	8
32	R2, R4, R6, R8, R10, R12, R14, R16, R18, R20, R22, R24, R26, R28, R30, R32, R34, R36, R38, R40, R42, R44, R46, R48, R50, R52, R54, R56, R58, R60, R62, R64	RESISTOR 680Ω, ¼W, 5%	1301424	7
65	C1 THRU C32 C34 THRU C86	CAPACITOR .01uf, 50V, 20% AXIAL	1001610	6
6	C87 THRU C92,	CAPACITOR 6.8uf, 35V, 10% TANT	1005306	5
1		ETCHED CIRCUIT BOARD	5009804	4
REF		MODULE ECO HISTORY	[redacted]	3
REF		ASSY/DRILLING HOLE LAYOUT	[redacted]	2
REF		X-Y COORDINATE HOLE LOCATION	[redacted]	1

DEC 745153	8	16				
DEC 74175	2	16				
DEC 7485	4	16				
DEC 745174	8	16				
DEC 745157	1	16				
DEC 9310	8	16				
DEC 380	1	8				
IC TYPE	GND	+5V				

SEMICONDUCTOR CONVERSION CHART

[redacted] EQUIPMENT CORPORATION

TITLE: PROCESSOR DATA & UNIBUS REGS.

B-DD-11/45-0

[redacted] 5008804-0-1 C

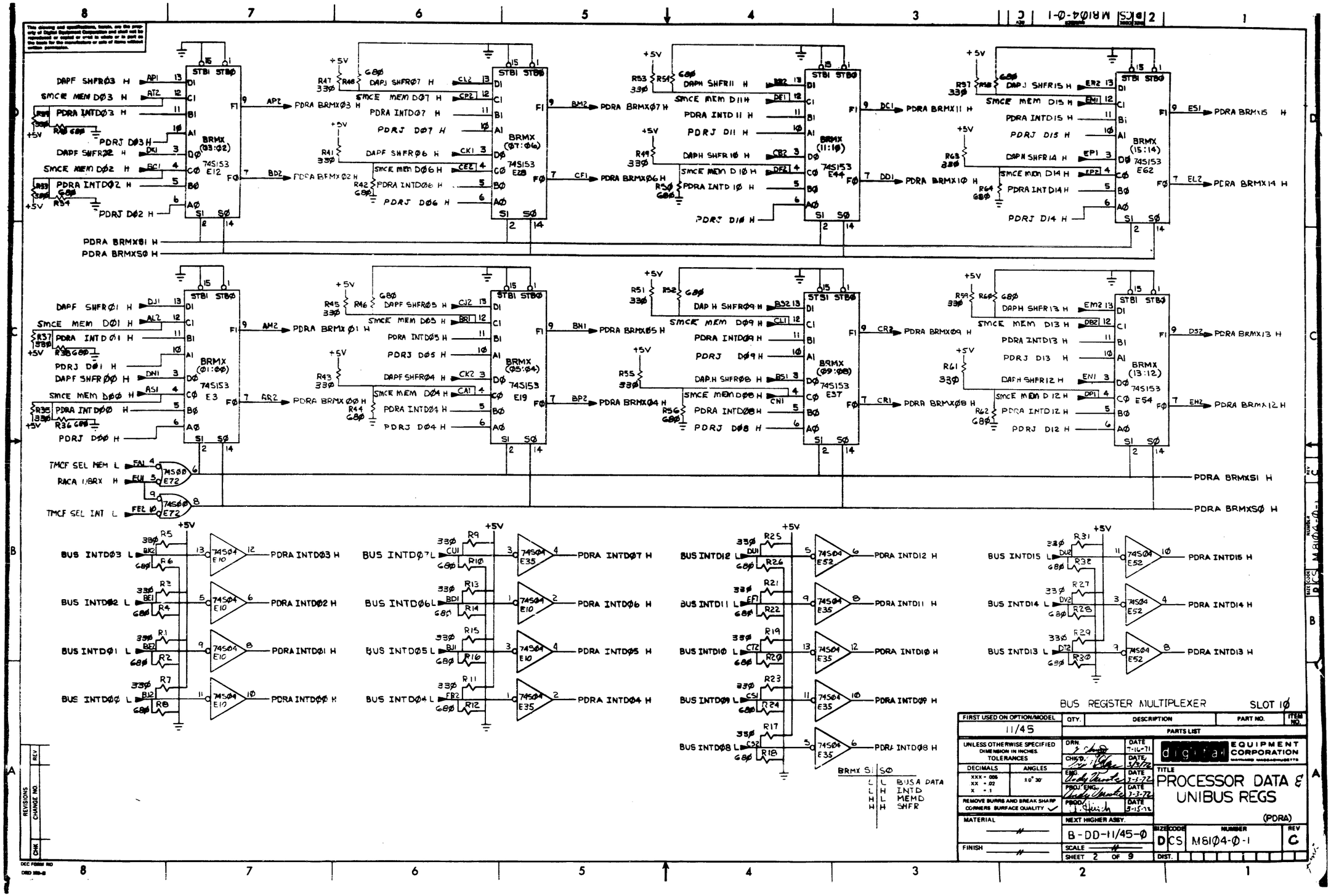

BRMX (03:02) 74S153 E12
BRMX (07:06) 74S153 E28
BRMX (11:10) 74S153 E44
BRMX (15:14) 74S153 E62
BRMX (01:00) 74S153 E3
BRMX (05:04) 74S153 E19
BRMX (09:08) 74S153 E37
BRMX (13:12) 74S153 E54
74S00 E72
74S04 E10
74S04 E35
74S04 E52
PDRA BRMXS1 H
PDRA BRMXS0 H
BUS REGISTER MULTIPLEXER
SLOT 10
BRMX S1 S0
L L BUSA DATA
L H INTD
H L MEMD
H H SHFR
FIRST USED ON OPTION/MODEL
11/45
QTY.
DESCRIPTION
PART NO.
ITEM NO.
PARTS LIST
UNLESS OTHERWISE SPECIFIED DIMENSION IN INCHES TOLERANCES
DECIMALS
ANGLES
REMOVE BURRS AND BREAK SHARP CORNERS SURFACE QUALITY
MATERIAL
FINISH
DRN.
CHK'D.
ENG.
PROJ. ENG.
PROD.
DATE 7-16-71
DATE 3/3/72
DATE 3-3-72
DATE 3-3-72
DATE 3-15-72
digital EQUIPMENT CORPORATION
TITLE
PROCESSOR DATA & UNIBUS REGS
(PDRA)
NEXT HIGHER ASSY.
B-DD-11/45-0
SCALE
SHEET 2 OF 9
SIZE D
CODE CS
NUMBER M8104-0-1
REV C
DIST.
REVISIONS
CHANGE NO.
REV
CHK

80

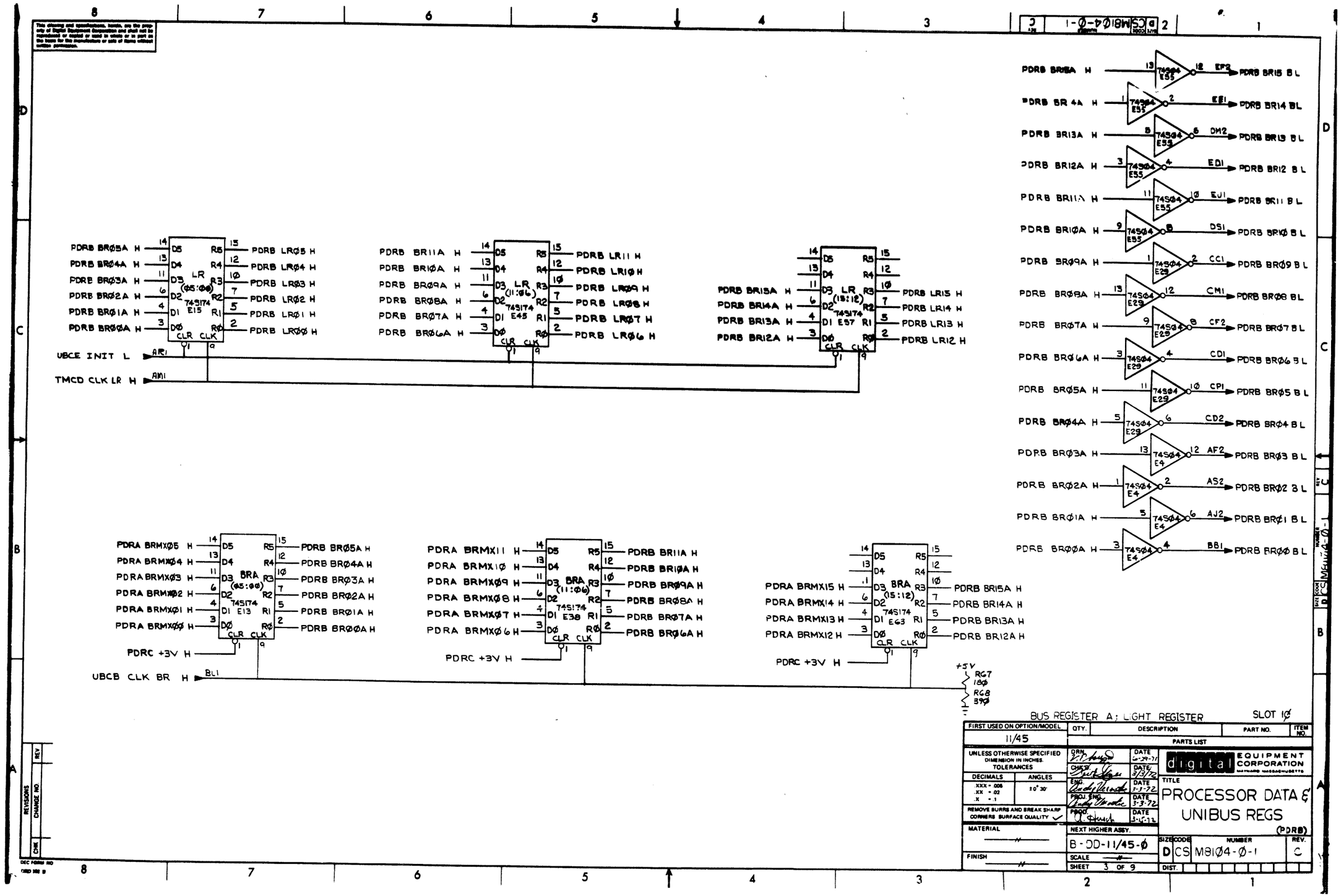

PDRB BRØ5A H
PDRB BRØ4A H
PDRB BRØ3A H
PDRB BRØ2A H
PDRB BRØ1A H
PDRB BRØØA H
LR (Ø5:ØØ) 74S174 E15
PDRB LRØ5 H
PDRB LRØ4 H
PDRB LRØ3 H
PDRB LRØ2 H
PDRB LRØ1 H
PDRB LRØØ H
UBCE INIT L
TMCD CLK LR H
PDRB BR11A H
PDRB BR1ØA H
PDRB BRØ9A H
PDRB BRØ8A H
PDRB BRØ7A H
PDRB BRØ6A H
LR (11:Ø6) 74S174 E45
PDRB LR11 H
PDRB LR1Ø H
PDRB LRØ9 H
PDRB LRØ8 H
PDRB LRØ7 H
PDRB LRØ6 H
PDRB BR15A H
PDRB BR14A H
PDRB BR13A H
PDRB BR12A H
LR (15:12) 74S174 E57
PDRB LR15 H
PDRB LR14 H
PDRB LR13 H
PDRB LR12 H
PDRA BRMXØ5 H
PDRA BRMXØ4 H
PDRA BRMXØ3 H
PDRA BRMXØ2 H
PDRA BRMXØ1 H
PDRA BRMXØØ H
BRA (Ø5:ØØ) 74S174 E13
PDRB BRØ5A H
PDRB BRØ4A H
PDRB BRØ3A H
PDRB BRØ2A H
PDRB BRØ1A H
PDRB BRØØA H
PDRC +3V H
UBCB CLK BR H
PDRA BRMX11 H
PDRA BRMX1Ø H
PDRA BRMXØ9 H
PDRA BRMXØ8 H
PDRA BRMXØ7 H
PDRA BRMXØ6 H
BRA (11:Ø6) 74S174 E38
PDRB BR11A H
PDRB BR1ØA H
PDRB BRØ9A H
PDRB BRØ8A H
PDRB BRØ7A H
PDRB BRØ6A H
PDRC +3V H
PDRA BRMX15 H
PDRA BRMX14 H
PDRA BRMX13 H
PDRA BRMX12 H
BRA (15:12) 74S174 E63
PDRB BR15A H
PDRB BR14A H
PDRB BR13A H
PDRB BR12A H
PDRC +3V H
+5V
RG7 18Ø
RG8 39Ø
PDRB BR15A H
PDRB BR 4A H
PDRB BR13A H
PDRB BR12A H
PDRB BR11A H
PDRB BR1ØA H
PDRB BRØ9A H
PDRB BRØ8A H
PDRB BRØ7A H
PDRB BRØ6A H
PDRB BRØ5A H
PDRB BRØ4A H
PDRB BRØ3A H
PDRB BRØ2A H
PDRB BRØ1A H
PDRB BRØØA H
74SØ4 E55
74SØ4 E29
74SØ4 E4
EF2 PDRB BR15 B L
EE1 PDRB BR14 B L
DM2 PDRB BR13 B L
ED1 PDRB BR12 B L
EJ1 PDRB BR11 B L
DS1 PDRB BR1Ø B L
CC1 PDRB BRØ9 B L
CM1 PDRB BRØ8 B L
CF2 PDRB BRØ7 B L
CD1 PDRB BRØ6 B L
CP1 PDRB BRØ5 B L
CD2 PDRB BRØ4 B L
AF2 PDRB BRØ3 B L
AS2 PDRB BRØ2 B L
AJ2 PDRB BRØ1 B L
BB1 PDRB BRØØ B L
BUS REGISTER A; LIGHT REGISTER
SLOT 1Ø
FIRST USED ON OPTION/MODEL
11/45
QTY.
DESCRIPTION
PART NO.
ITEM NO.
PARTS LIST
UNLESS OTHERWISE SPECIFIED DIMENSION IN INCHES. TOLERANCES
DECIMALS
ANGLES
.XXX = .005
.XX = .02
.X = .1
±0° 30'
REMOVE BURRS AND BREAK SHARP CORNERS SURFACE QUALITY
MATERIAL
FINISH
DRN.
DATE 6-29-71
CHK'D.
DATE 3/3/72
ENG.
DATE 3-3-72
PROJ. ENG.
DATE 3-3-72
PROD.
DATE 3-15-72
NEXT HIGHER ASSY.
B-DD-11/45-Ø
SCALE
SHEET 3 OF 9
digital EQUIPMENT CORPORATION
MAYNARD MASSACHUSETTS
TITLE
PROCESSOR DATA & UNIBUS REGS
(PDRB)
SIZE D
CODE CS
NUMBER M81Ø4-Ø-1
REV. C
DIST.
REVISIONS
CHANGE NO.
REV
CHK
DEC FORM NO

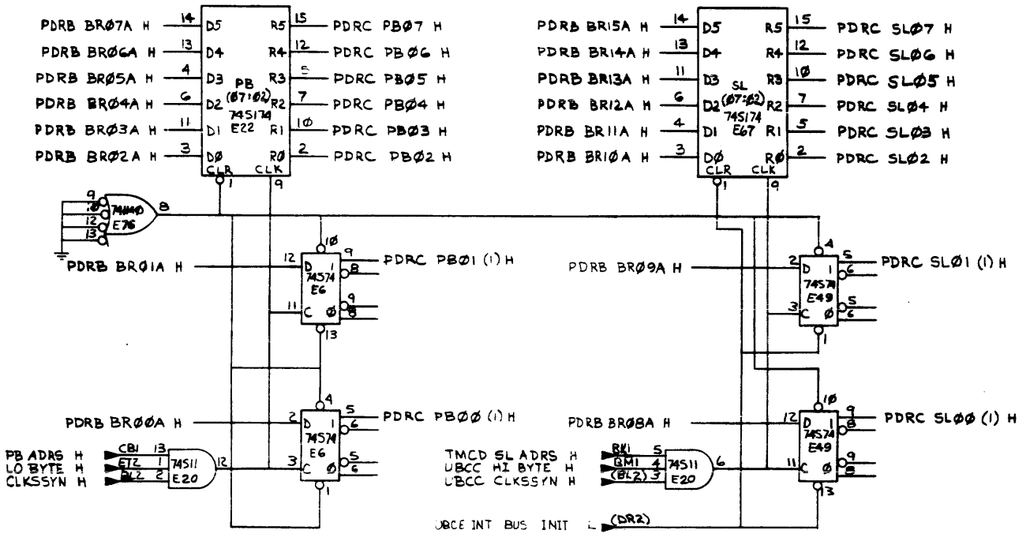

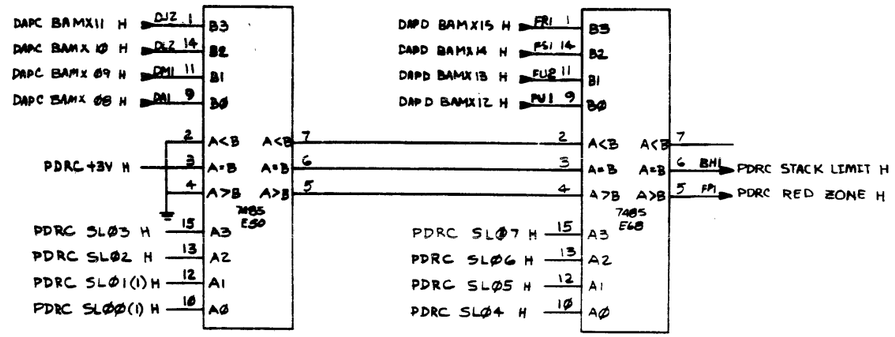

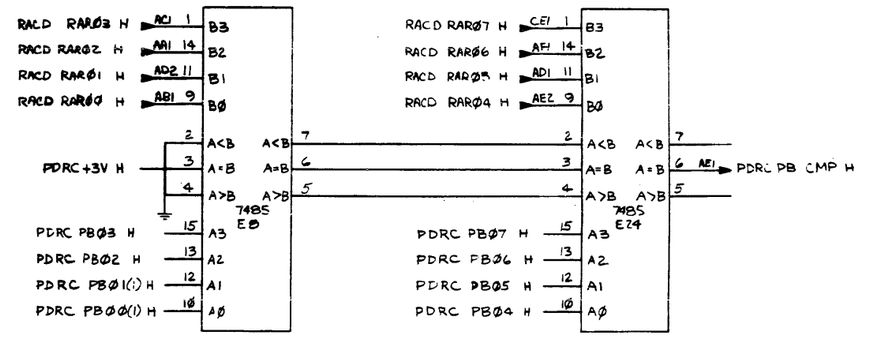

PROGRAM BREAK & STACK LIMIT REGISTERS SLOT 10

FIRST USED ON OPTION/MODEL	QTY.	DESCRIPTION	PART NO.	ITEM NO.
11/45		PARTS LIST		

UNLESS OTHERWISE SPECIFIED DIMENSION IN INCHES. TOLERANCES
DECIMALS: XXX ± .005, XX ± .02, X ± .1 — ANGLES: ±0° 30'
REMOVE BURRS AND BREAK SHARP CORNERS SURFACE QUALITY ✓
MATERIAL —
FINISH —

DRN [illegible] DATE 9/21/71
CHK'D [illegible] DATE 9/21/71
ENG [illegible] DATE 3-3-72
PROJ ENG [illegible] DATE 3-7-72
PROG [illegible] DATE 3-14-72

NEXT HIGHER ASSY. B-DD-11/45-0
SCALE —
SHEET 4 OF 9

digital EQUIPMENT CORPORATION MAYNARD MASSACHUSETTS

TITLE PROCESSOR DATA & UNIBUS REGS (PDRC)

SIZE DCS | CODE | NUMBER M8104-0-1 | REV. C
DIST.

REVISIONS: REV. | CHANGE NO. | CHK

DOC PERM 500 FORM 5000-01

82

This drawing and specifications, for use, are the property of Digital Equipment Corporation and shall not be reproduced or copied or used in whole or in part as the basis for the manufacture or sale of items without written permission.

TIMCE KERNEL DATI L (FDL) — PDRD KERNEL DATI B N

PDRB BRIBA N

PDRD ISBBA B L
RACB UIBSBA N
TIGD T9B N

PDRB BRIVA N
PDRD LOAD PS N

PDRB BRICA H

PDRB BRIBA N

TIGD T9B N

PDRD ISBBA B L
RACB UIBSBA N
PDRB BRIVA N

PDRD PS CLK N

UBCE STATUS CLR L (FN1)

PDRD LOAD PS N

PDRB BRIZA N
TIMCE KERNEL DATI L (FDL)
PDRD KERNEL DATI B N
PDRD PS14 (1) N

PDRB BRIIA N
PDRD LOAD PS N

TIMCD PS ADRS N (DAL) N
UBCC CLK SSYN N
UBCC HI BYTE N

PDRD PS CLK H

PDRB BRIIA H

PDRB BRIBA N

PDRB BRIAA N

PDRB BRIBA N

PDRB BRIAA N

PDRB BRIBA N

PDRB BRIAA N

This drawing and specifications, herein, are the property of Digital Equipment Corporation and shall not be reproduced or copied or used in whole or in part as the basis for the manufacture or sale of items without written permission.

TMCD HI BYTE EN H — ER1 — 74S04 E65

TMCD LO BYTE EN H — FE1 — 74S04 E75

DMX (01:00) 74S153 E5
- PDRB BR00A H
- PDRC SL01 (1) H
- PDRD PIA00 H
- IRCH V (1) H
- PDRB BR00A H
- PDRC PB00 (1) H
- IRCH C B (1) H
- STBI STB0 — SI S0
- F1 → 8881 E1 13(AV2) → BUSA D01 L
- F0 → 8881 E1 1 (BA1) → BUSA D00 L

DMX (03:02) 74S153 E14
- PDRB BR02A H
- PDRC PB02 H
- PDRD PIA01 H
- IRCH N B (1) H
- PDRB BR02A H
- PDRC PB03 H
- PDRD PIA02 H
- IRCH Z (1) H
- STBI STB0 — SI S0
- F1 → 8881 E1 10 (AU2) → BUSA D03 L
- F0 → 8881 E1 4 (AU1) → BUSA D02 L

DMX (05:04) 74S153 E21
- PDRB BR04A H
- PDRC PB04 H
- PDRD PS04 (1) H
- PDRB BR05A H
- PDRC PB05 H
- PDRD PIA00 H
- PDRD PS05 (1) H
- STBI STB0 — SI S0
- F1 → 8881 E26 4 (CH2) → BUSA D05 L
- F0 → 8881 E26 10 (BF2) → BUSA D04 L

DMX (07:06) 74S153 E30
- PDRB BR06A H
- PDRC PB06 H
- PDRD PIA01 H
- PDRD PS06 (1) H
- PDRB BR07A H
- PDRC PB07 H
- PDRD PIA02 H
- PDRD PS07 (1) H
- STBI STB0 — SI S0
- F1 → 8881 E26 13 (CH2) → BUSA D07 L
- F0 → 8881 E26 (3K2) → BUSA D06 L

DMX (11:10) 74S153 E46
- PDRB BR11A H
- PDRC SL02 H
- PDRD PIR10 (1) H
- PDRB BR10A H
- PDRC SL02 H
- PDRD PIR10 (1) H
- STBI STB0 — SI S0
- F1 → 8881 E42 1 (DH2) → BUSA D11 L
- F0 → 8881 E42 13 (DK2) → BUSA D10 L

DMX (13:12) 74S153 E56
- PDRB BR13A H
- PDRC SL03 H
- PDRD PIR13 (1) H
- PDRD PS13 (1) H
- PDRB BR12A H
- PDRC SL04 H
- PDRD PIR12 (1) H
- PDRD PS12 (1) H
- STBI STB0 — SI S0
- F1 → 8881 E60 4 (BH) → BUSA D13 L
- F0 → 8881 E60 10 (BK2) → BUSA D12 L

DMX (15:14) 74S153 E64
- PDRB BR15A H
- PDRC SL05 H
- PDRD PIR15 (1) H
- PDRD PS15 (1) H
- PDRB BR14A H
- PDRC SL06 H
- PDRD PIR14 (1) H
- PDRD PS14 (1) H
- STBI STB0 — SI S0
- F1 → 8881 E60 13 (AJ1) → BUSA D15 L
- F0 → 8881 E60 1 (CJ1) → BUSA D14 L

TMCD DMXSI H — E37 — 74S04 E65 → PDRE DMXSI L

TMCD DMXS0 H — E32 — 74S04 E65 → PDRE DMXS0 L

PDRE DMXSI L

PDRE DMXS0 L

DMX SI	DMX S0	OUTPUT
L	L	STATUS
L	H	PIR ; PIA
H	L	SL ; PB
H	H	BR

UNIBUSA DATA MULTIPLEXER SLOT10

FIRST USED ON OPTION/MODEL	QTY.	DESCRIPTION	PART NO.	ITEM NO.
11/45		PARTS LIST		

UNLESS OTHERWISE SPECIFIED DIMENSION IN INCHES. TOLERANCES
DECIMALS: XXX = .005, XX = .02, X = .1 — ANGLES: ±0° 30'
REMOVE BURRS AND BREAK SHARP CORNERS SURFACE QUALITY ✓
MATERIAL
FINISH

DRN. S.W.R. DATE 7/18/71
CHK'D DATE 5/3/72
ENG DATE 5-3-72
PROJ. ENG DATE 7-5-72
PRGR. DATE 5-15-72
NEXT HIGHER ASSY. B-DD-11/45-0
SCALE
SHEET 6 OF 9

digital EQUIPMENT CORPORATION MAYNARD MASSACHUSETTS

TITLE
PROCESSOR DATA & UNIBUS REGS. (PDRE)

SIZE D CODE CS NUMBER M8104-0-1 REV. C
DIST.

REVISIONS: REV. | CHANGE NO | CHK

DEC FORM 140 DRD 100-B

84

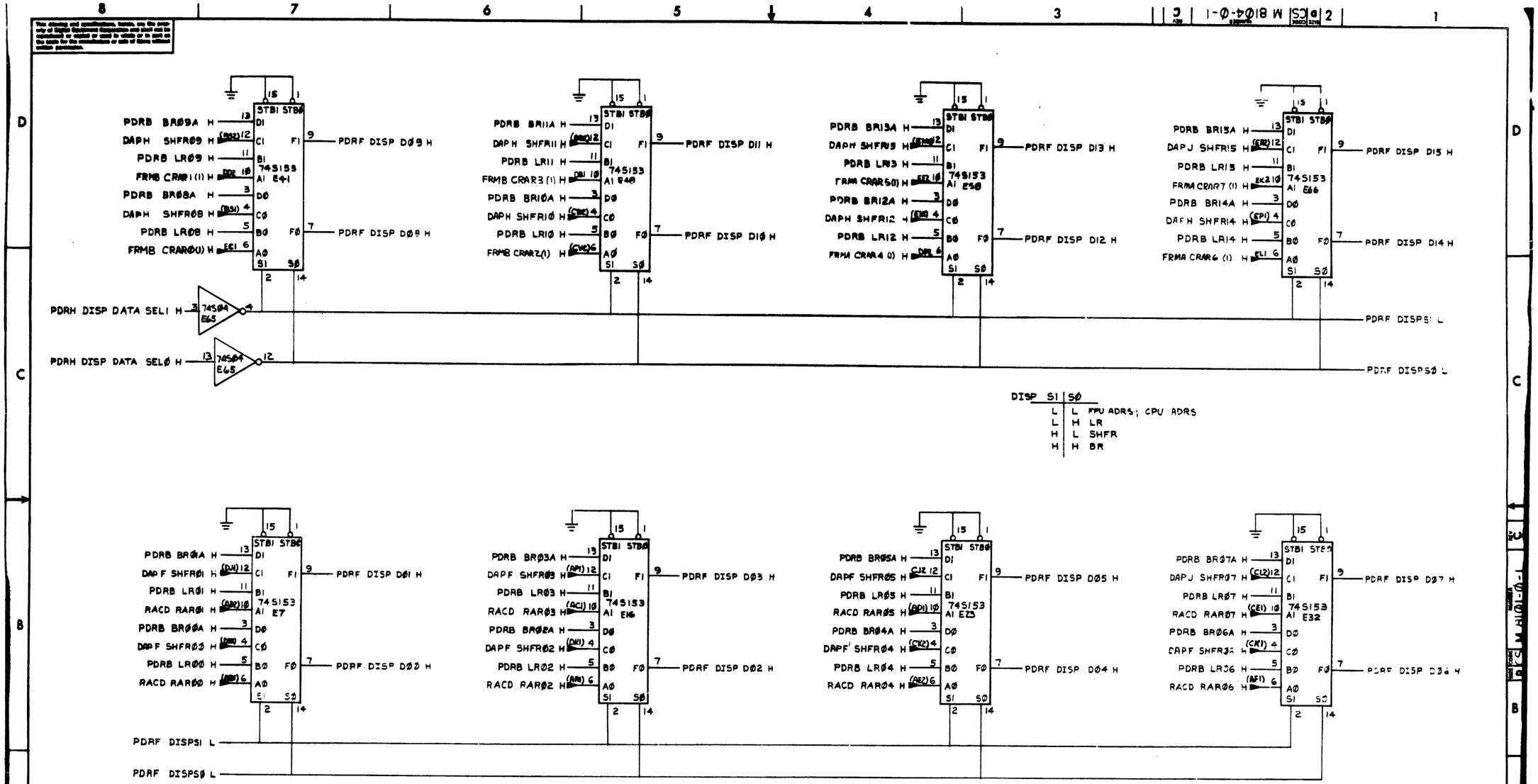

DATA DISPLAY MULTIPLEXER

SLOT1Ø

FIRST USED ON OPTION/MODEL	QTY.	DESCRIPTION	PART NO.	ITEM NO.
11/45		PARTS LIST		

UNLESS OTHERWISE SPECIFIED DIMENSION IN INCHES. TOLERANCES

DECIMALS	ANGLES
.XXX = .005	±0° 30'
.XX = .02	
.X = .1	

REMOVE BURRS AND BREAK SHARP CORNERS SURFACE QUALITY ✓

MATERIAL

FINISH

DRN. DATE 7-2-71
CHK'D DATE 7/5/72
ENG. DATE 7-3-72
PROJ. ENG. DATE 7-3-72
PROD. DATE 3-15-72

NEXT HIGHER ASSY. B-DD-11/45-Ø

SCALE

SHEET 7 OF 9

digital EQUIPMENT CORPORATION MAYNARD MASSACHUSETTS

TITLE PROCESSOR DATA & UNIBUS REGS (PDRF)

SIZE	CODE	NUMBER	REV.
D	CS	M81Ø4-Ø-1	C

DIST.

REVISIONS | CHANGE NO. | REV. | CHK.

DEC FORM NO

85

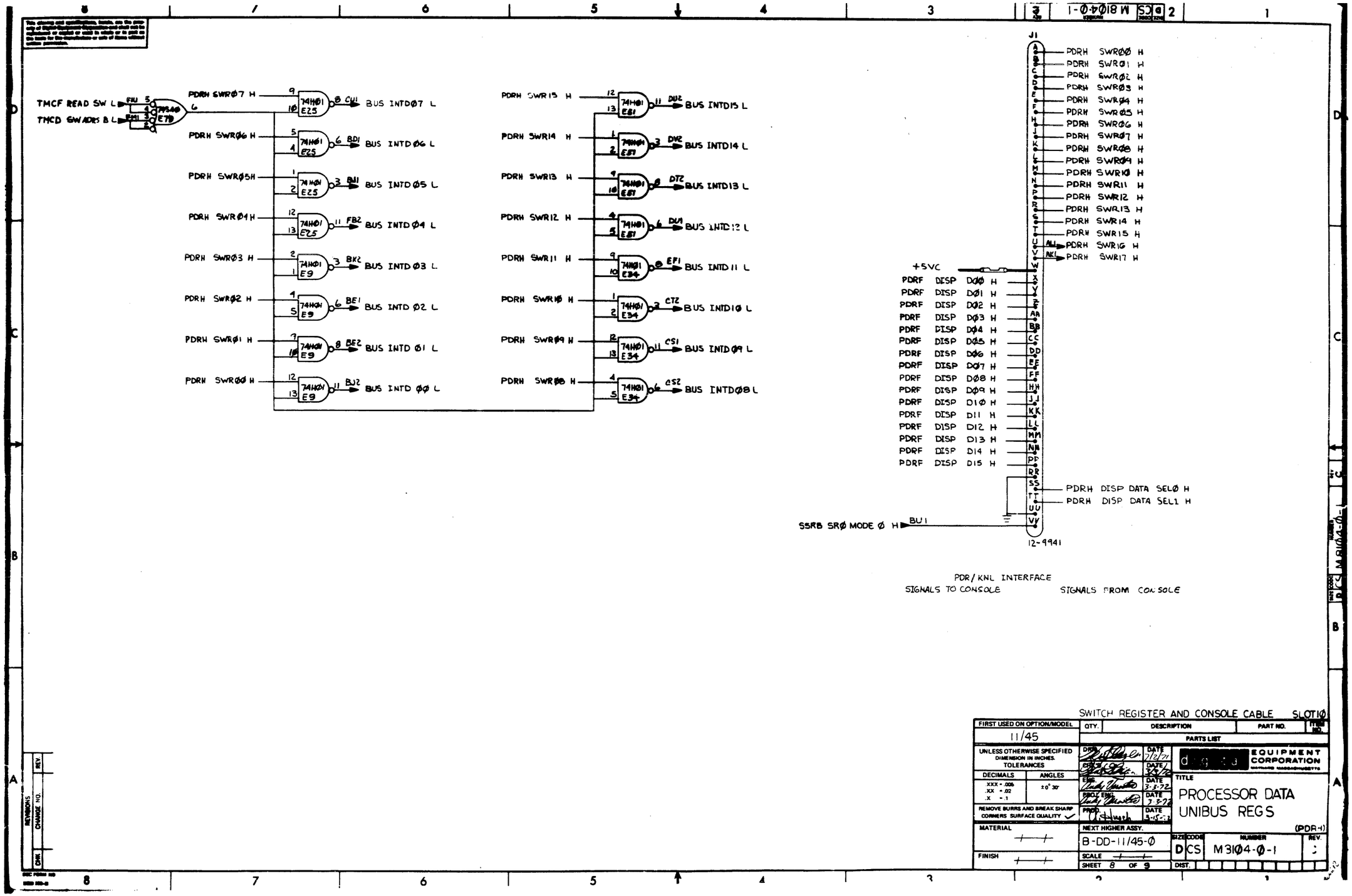

TMCF READ SW L
TMCD SW ADRS B L
74S40 E79
PDRH SWR07 H
PDRH SWR06 H
PDRH SWR05 H
PDRH SWR04 H
PDRH SWR03 H
PDRH SWR02 H
PDRH SWR01 H
PDRH SWR00 H
74H01 E25
74H01 E9
BUS INTD07 L
BUS INTD06 L
BUS INTD05 L
BUS INTD04 L
BUS INTD03 L
BUS INTD02 L
BUS INTD01 L
BUS INTD00 L
PDRH SWR15 H
PDRH SWR14 H
PDRH SWR13 H
PDRH SWR12 H
PDRH SWR11 H
PDRH SWR10 H
PDRH SWR09 H
PDRH SWR08 H
74H01 E51
74H01 E34
BUS INTD15 L
BUS INTD14 L
BUS INTD13 L
BUS INTD12 L
BUS INTD11 L
BUS INTD10 L
BUS INTD09 L
BUS INTD08 L
J1
PDRH SWR00 H
PDRH SWR01 H
PDRH SWR02 H
PDRH SWR03 H
PDRH SWR04 H
PDRH SWR05 H
PDRH SWR06 H
PDRH SWR07 H
PDRH SWR08 H
PDRH SWR09 H
PDRH SWR10 H
PDRH SWR11 H
PDRH SWR12 H
PDRH SWR13 H
PDRH SWR14 H
PDRH SWR15 H
PDRH SWR16 H
PDRH SWR17 H
+5VC
PDRF DISP D00 H
PDRF DISP D01 H
PDRF DISP D02 H
PDRF DISP D03 H
PDRF DISP D04 H
PDRF DISP D05 H
PDRF DISP D06 H
PDRF DISP D07 H
PDRF DISP D08 H
PDRF DISP D09 H
PDRF DISP D10 H
PDRF DISP D11 H
PDRF DISP D12 H
PDRF DISP D13 H
PDRF DISP D14 H
PDRF DISP D15 H
PDRH DISP DATA SEL0 H
PDRH DISP DATA SEL1 H
SSRB SR0 MODE 0 H
BU1
12-9941
PDR/KNL INTERFACE
SIGNALS TO CONSOLE
SIGNALS FROM CONSOLE
SWITCH REGISTER AND CONSOLE CABLE SLOT10
FIRST USED ON OPTION/MODEL
11/45
QTY.
DESCRIPTION
PART NO.
ITEM NO.
PARTS LIST
UNLESS OTHERWISE SPECIFIED DIMENSION IN INCHES. TOLERANCES
DECIMALS
ANGLES
REMOVE BURRS AND BREAK SHARP CORNERS SURFACE QUALITY
MATERIAL
FINISH
DRN.
DATE 7/2/71
CHK'D
DATE 3/3/72
ENG.
DATE 3-3-72
PROJ. ENG.
DATE 3-3-72
PROD.
DATE 3-15-72
EQUIPMENT CORPORATION
TITLE
PROCESSOR DATA
UNIBUS REGS
(PDRH)
NEXT HIGHER ASSY.
B-DD-11/45-0
SCALE
SHEET 8 OF 9
SIZE D
CODE CS
NUMBER M3104-0-1
REV.
DIST.
REVISIONS
CHANGE NO.
REV.
CHK.

86

THIS DRAWING AND SPECIFICATIONS, HEREIN, ARE THE PROPERTY OF DIGITAL EQUIPMENT CORPORATION AND SHALL NOT BE REPRODUCED OR COPIED OR USED IN WHOLE OR IN PART AS THE BASIS FOR THE MANUFACTURE OR SALE OF ITEMS WITHOUT WRITTEN PERMISSION.
COPYRIGHT © , DIGITAL EQUIPMENT CORPORATION

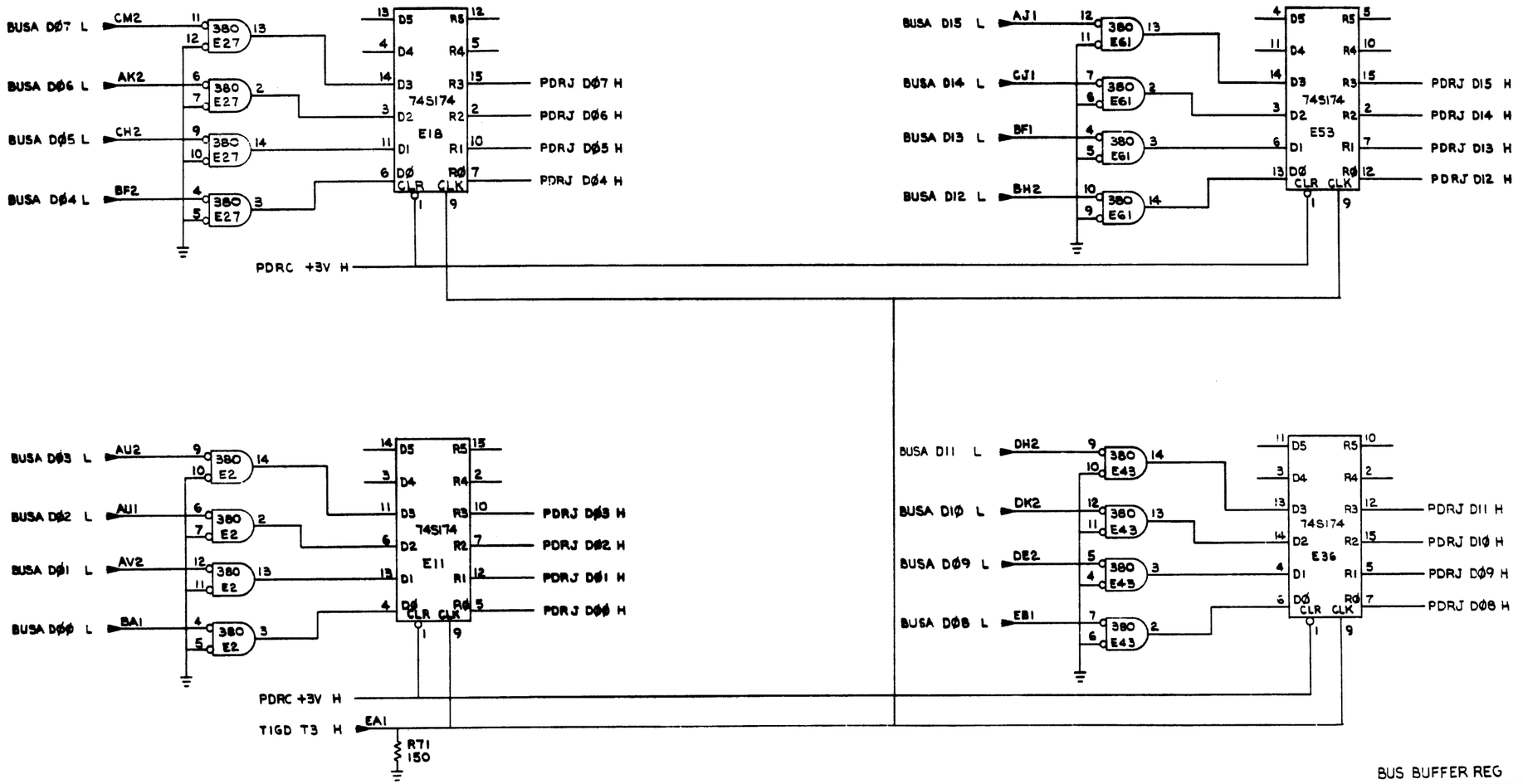

BUS BUFFER REG SLOT 1Ø

FIRST USED ON OPTION/MODEL	QTY.	DESCRIPTION	PART NO.	ITEM NO.
11/45	PARTS LIST			

UNLESS OTHERWISE SPECIFIED DIMENSION IN INCHES
TOLERANCES: DECIMALS .XXX = .005, .XX = .02, .X = .1; ANGLES ±0° 30'
REMOVE BURRS AND BREAK SHARP CORNERS SURFACE QUALITY ▽

	NAME	DATE
DRN	Mandett	12/73
CHK'D	E Manor	1-15-74
ENG	Mike Hebert	1/30/74
PROJ. ENG.	Mike Hebert	1/30/74
PROD.	[illegible]	2-5-74

digital EQUIPMENT CORPORATION MAYNARD MASSACHUSETTS

MATERIAL —
FINISH —
NEXT HIGHER ASSY. B-DD-11/45-Ø
SCALE —
SHEET 9 OF 9

TITLE: PROCESSOR DATA UNIBUS REGS (PDRJ)

SIZE	CODE	NUMBER	REV.
D	CS	M8104-Ø-1	C

DIST.

REVISIONS: REV | CHANGE NO | DWG

DCS M8104-0-1 REV C

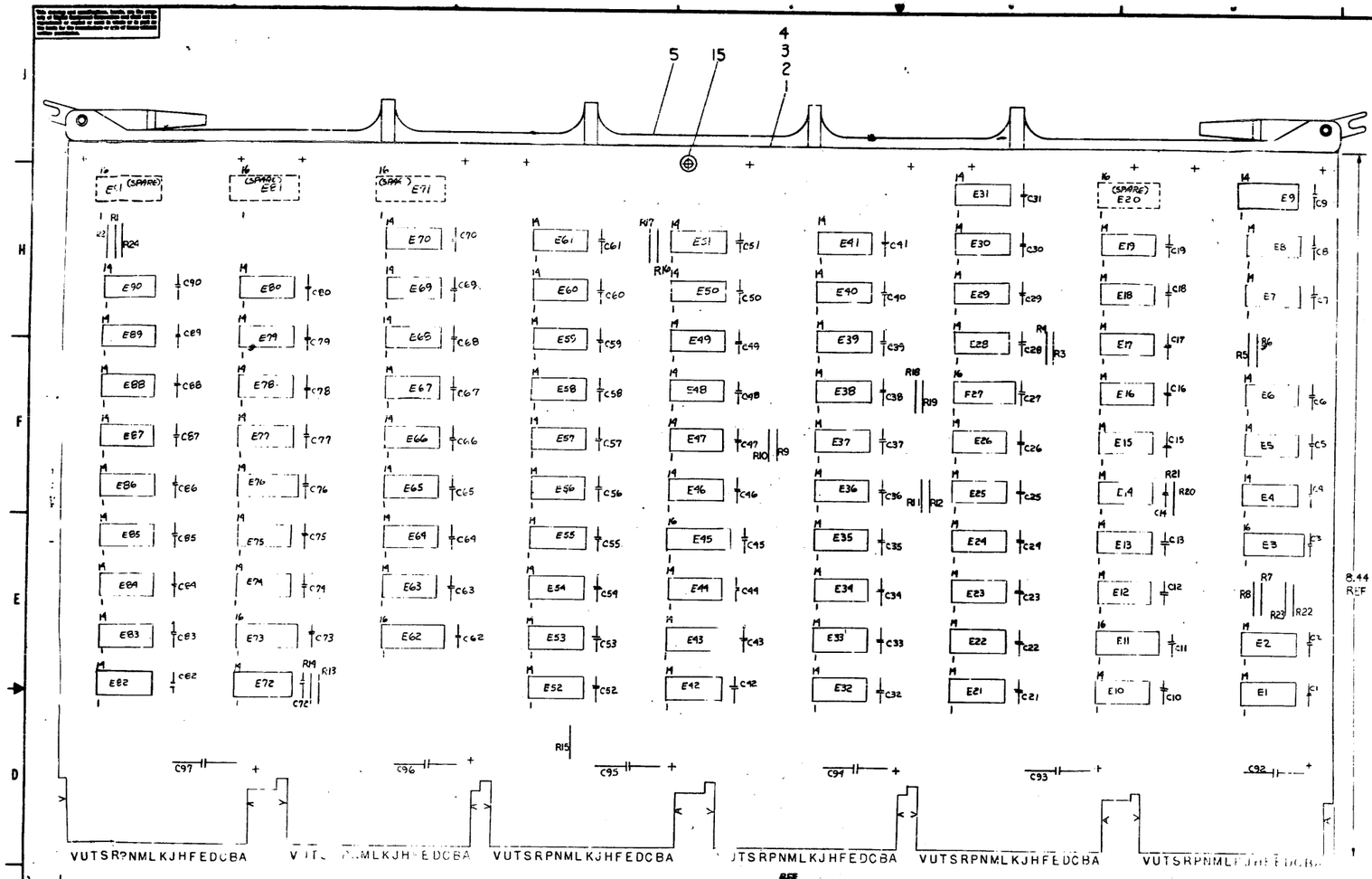

NOTE:
1. UNLESS OTHERWISE NOTED RESISTANCE IS IN Ω, CAPACITANCE IS IN PICOFARADS. CAPS WITHOUT VALUE NOTED ARE .01 MFD.

AA2, AV1, BA2, BV1, CA2, CV1, DA2, DV1, EA2, EV1, FA2, FV1 — +5V

AC2, AN1, AH1, AT1, BC2, BN2, BH1, BT1, CC2, CN2, CH1, CT1, DC2, DN2, DH1, DT1, EC2, EN2, EH1, ET1, FC2, FN2, FH1, FT1 — GND

6.8 µf C92 THRU C97 — .01 µf C1-C9, C18-C19, C21-C70, C72-C80, C82-C90

QTY	REF DESIGNATION	DESCRIPTION	PART NO.	ITEM NO.
		PARTS LIST		
		ETCH BOARD REV F		
1	R24	RESISTOR 10K, 1/4W, 5%	1301479	34
1	E3	DEC IC 74155	1910656	33
2	E24, E59	DEC IC 8885	1910649	32
3	E45, E62, E73	DEC IC 745174	1910550	31
1	E11	DEC IC 745153	1910547	30
3	E30, E56, E86	DEC IC 745140	1910546	29
1	E27	DEC IC 745112	1910545	28
5	E17, E40, E41, E54, E37	DEC IC 74S74	1910544	27
2	E16, E25, E28	DEC IC 74S64	1910542	26
11	E8, E30, E39, E40, E50, E53, E64, E65, E70, E75, E89	DEC IC 74S20	1910539	25
17	E5, E14, E21, E29, E31, E34, E35, E40, E47, E49, E66, E67, E72, E76, E77, E78, E88	DEC IC 74S11	1910537	24
5	E13, E32, E44, E51, E83	DEC IC 74S10	1910536	23
12	E4, E18, E22, E26, E33, E36, E46, E57, E63, E74, E85, E90	DEC IC 74S04	1910534	22
8	E1, E6, E42, E60, E70, E79, E87, E3	DEC IC 74S00	1910532	21
1	E2	DEC IC 8815A	1909713	20
1	E10	DEC IC 380A	1909485	19
1	E7	DEC IC 74H11	1909267	18
5	E15, E52, E58, E61, E84	DEC IC 74H50	1909060	17
5	E12, E13, E55, E68, E69, E80, E82	DEC IC 74H30	1909059	16
12		EYELET	9006732	15
2	R2, R14	RESISTOR, 680Ω, 1/4W, 5%	1301424	14
1	R17	RESISTOR, 180Ω, 1/4W, 5%	1301322	13
3	R15, R16, R17	RESISTOR, 1K, 1/4W, 5%	1300365	12
1	R3	RESISTOR, 390Ω, 1/4W, 5%	1300309	11
2	R1, R13	RESISTOR, 330Ω, 1/4W, 5%	1300295	10
1	R21	RESISTOR, 150Ω, 1/4W, 5%	1300250	9
4	R4, R6, R18, R23	RESISTOR, 120Ω, 1/4W, 5%	1300247	8
87	C1-C9, C18-C19, C21-C70, C72-C80, C82-C90	CAP .01µf, 100V, 20% DISC	100.610	7
6	C92 THRU C97	CAP 6.8 µf, 35V, 10%	100±306	6
		HANDLE, MODULE	1210711-2-0	5
1		ETCHED CIRCUIT BOARD	5009803	4
REF		ECO MODULE HISTORY	B-MM-MBØ5-Ø-6	3
REF		ASSY/DRILLING HOLE LAYOUT	E-AM-MBØ5-Ø-5	2
REF		X-Y COORDINATE HOLE LOCATION	K-CO-MBØ5-Ø-4	1

IC TYPE	GND	+5V
DEC 74S74	8	16
DEC 74155	8	16
DEC 745153	8	16
DEC 745112	8	16
DEC 8885A	1	8

GND AND +5V ARE USUALLY PIN 7 AND 14 RESPECTIVELY. EXCEPTIONS ARE STATED ABOVE.

IC PIN LOCATIONS

JUMPER LIST

FROM SOL	ASSY	FROM PT	TO PT

SEMICONDUCTOR CONVERSION CHART

DEC NO.	EIA NO.	DEC NO.	EIA NO.

REV	REVISIONS	CHK	ORIGINATED	CHANGE NO.
A	MB105-00001		3-27-72	
B	MB105-00002		4-19-72	

A. HEIENIUS 3/16/72 MB105-00003 E
A. HEIENIUS 3/17/72 MB105-00004 F
A. HEIENIUS 3/17/72 MB105-00005 F
A. HEIENIUS 3/17/72 MB105-00006 F
A. HEIENIUS 3/17/72 MB105-00007 F
A. HEIENIUS 3/17/72 MB105-00008 F
A. HEIENIUS 3/17/72 MB105-00009 F
A. HEIENIUS 3/17/72 MB105-00010 F

DRAWN A. HEIENIUS 3-27-72
CHECKED A. HEIENIUS 3-27-72
ENG APPR A. HEIENIUS 3-27-72
MFG APPR A. HEIENIUS 3-27-72
QUAL APPR A. HEIENIUS 3-27-72

NEXT HIGHER ASSY 8-DD-11/45-0
SCALE 2/1
SHEET 1 OF 7

EQUIPMENT CORPORATION

TITLE: TRAP & MISC. CONTROL

SIZE B | CS | MB105-0-1 | REV K

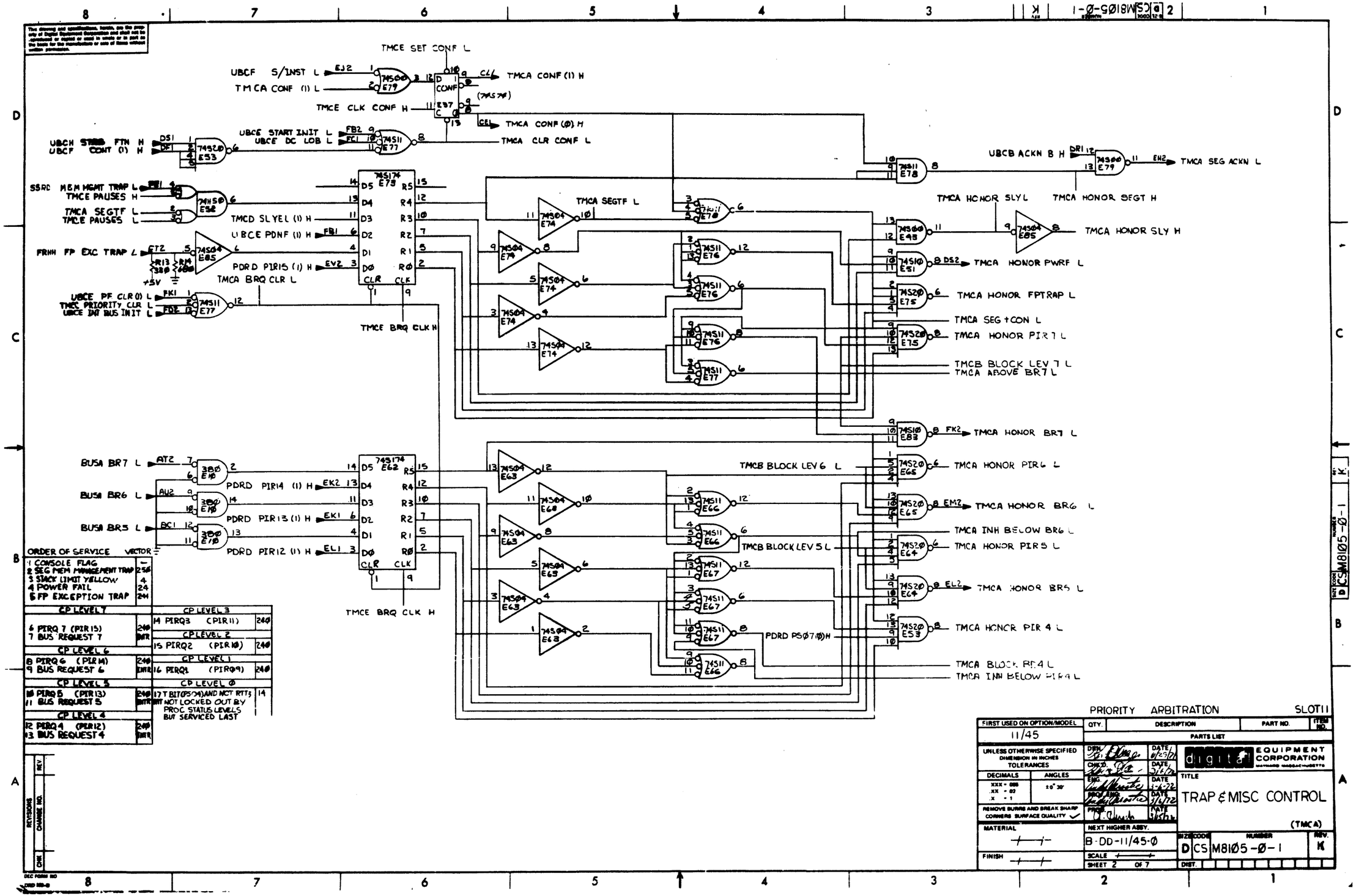

TMCE SET CONF L
UBCF S/INST L
TMCA CONF (1) L
TMCA CONF (1) H
TMCE CLK CONF H
TMCA CONF (Ø) H
UBCE START INIT L
UBCE DC LOB L
TMCA CLR CONF L
UBCH STRB FTN H
UBCF CONT (1) H
SSRD MEM MGMT TRAP L
TMCE PAUSES H
TMCA SEGTF L
TMCE PAUSES L
TMCD SLYEL (1) H
UBCE PDNF (1) H
FRHH FP EXC TRAP L
PDRD PIR15 (1) H
TMCA BRQ CLR L
UBCE PF CLR (1) L
TMCE PRIORITY CLR L
UBCE INT BUS INIT L
TMCE BRQ CLK H
TMCA SEGTF L
UBCB ACKN B H
TMCA SEG ACKN L
TMCA HONOR SLY L
TMCA HONOR SEGT H
TMCA HONOR SLY H
TMCA HONOR PWRF L
TMCA HONOR FPTRAP L
TMCA SEG + CON L
TMCA HONOR PIR 7 L
TMCB BLOCK LEV 7 L
TMCA ABOVE BR7 L
TMCA HONOR BR7 L
BUSA BR7 L
BUSA BR6 L
BUSA BR5 L
PDRD PIR14 (1) H
PDRD PIR13 (1) H
PDRD PIR12 (1) H
TMCB BLOCK LEV 6 L
TMCA HONOR PIR6 L
TMCA HONOR BR6 L
TMCA INH BELOW BR6 L
TMCB BLOCK LEV 5 L
TMCA HONOR PIR5 L
TMCA HONOR BR5 L
PDRD PSØ7(Ø)H
TMCA HONOR PIR 4 L
TMCA BLOCK BR4 L
TMCA INH BELOW PIR4 L
ORDER OF SERVICE VECTOR
1 CONSOLE FLAG
2 SEG MEM MANAGEMENT TRAP 250
3 STACK LIMIT YELLOW 4
4 POWER FAIL 24
5 FP EXCEPTION TRAP 244
CP LEVEL 7
6 PIRQ 7 (PIR15)
7 BUS REQUEST 7
CP LEVEL 6
8 PIRQ 6 (PIR14)
9 BUS REQUEST 6
CP LEVEL 5
10 PIRQ 5 (PIR13)
11 BUS REQUEST 5
CP LEVEL 4
12 PIRQ 4 (PIR12)
13 BUS REQUEST 4
CP LEVEL 3
14 PIRQ3 (PIR11) 240
CP LEVEL 2
15 PIRQ2 (PIR10) 240
CP LEVEL 1
16 PIRQ1 (PIR09) 240
CP LEVEL Ø
17 T BIT (PS04) AND NOT RTT3 14
NOT LOCKED OUT BY PROC STATUS LEVELS BUT SERVICED LAST
PRIORITY ARBITRATION SLOT11
FIRST USED ON OPTION/MODEL
11/45
QTY. DESCRIPTION PART NO. ITEM NO.
PARTS LIST
UNLESS OTHERWISE SPECIFIED DIMENSION IN INCHES TOLERANCES
DECIMALS ANGLES
REMOVE BURRS AND BREAK SHARP CORNERS SURFACE QUALITY
MATERIAL
FINISH
NEXT HIGHER ASSY.
B-DD-11/45-Ø
SCALE
SHEET 2 OF 7
digital EQUIPMENT CORPORATION
TITLE
TRAP & MISC CONTROL
(TMCA)
SIZE D CODE CS NUMBER M8105-Ø-1 REV. K
DIST.
REVISIONS
REV. CHANGE NO. CHK

This drawing and specifications, herein, are the property of Digital Equipment Corporation and shall not be reproduced or copied in whole or in part or the basis for the manufacture or sale of items without written permission.

BUSA BR4 L
PDRD PIR11 (1) H
PDRD PIR10 (1) H
PDRD PIR09 (1) H
PDRD PS04 (1) H
IRCD RTT L
TMCA BRQ CLR L
TMCE BRQ CLK H
TMCB PS04 MAT H
74S/74 E45
74S11 E42
3B00 E10
R15 1K

TMCA SEG +CON L
TMCA HONOR SLY L
TMCA HONOR PWRF L
TMCA HONOR FPTRAP L
TMCA HONOR PIR7 L
TMCA HONOR BR7 L
TMCA HONOR PIR6 L
74H30 E80
74S04 E57

TMCA HONOR BR6 L
TMCA HONOR PIR5 L
TMCA HONOR BR5 L
TMCA HONOR PIR4 L
TMCB HONOR BR4 L
TMCB HONOR PIR3 L
TMCB HONOR PIR2 L
TMCB HONOR PIR1 L
74H30 E68
74S04 E57

74S04 E46
74S04 E46
74S04 E46
74S11 E47
74S11 E47
74S11 E49
74S11 E49
TMCA INH BELOW BR6 L
TMCA INH BELOW PIR4 L
TMCB BLOCK LEV 3 L
TMCB BLOCK LEV 2 L
PDRD PRIORITY = 0 H

74S20 E7B
74S20 E8B
74S20 E4B
74S20 E4B
TMCA ABOVE BR7 L
PDRD PS07 (0) H
TMCA BLOCK BR4 L
EP2 TMCB HONOR BR4 L
TMCB HONOR PIR3 L
TMCB HONOR PIR2 L
TMCB HONOR PIR1 L

PDRD PS07 (1) H
PDRD PS06 (1) H
PDRD PS05 (1) H
74S10 E51
74S00 E6B
74H50 E61
74H50 E61
TMCB BLOCK LEV 7 L
TMCB BLOCK LEV 6 L
TMCB BLOCK LEV 5 L
TMCB BLOCK LEV 3 L

PDRD PS07 (1) L
PDRD PS06 (1) L
74S11 E42
TMBC BLOCK LEV 2 L

74S11 E47
BAI TMCB BRQ TRUE L
74S10 E51
CRI TMCE BRQ TRUE H
74S20 E5B
DKI TMCB HONOR T L
74S00 E79
74S00 E79
EDI TMCB BRQ *-(T+CONF) L
TMCA CONF(0) H

TMCD +3V H
UBCD EXT BRQ L
TMCE INTR PAUSE H
TMCE BRQ TRUE H
TMCC TSB CLK H
UBCE INIT H
UBCB ACKN B H
74S74 E17
74S11 E42
8885 E59
BNI TMCB CLR INTRFL

74S00 E6B
DR2 TMCB FPTRAP L
TMCA HONOR FPTRAP L
74S04 E57
TMCB HONOR FPTRAP H
74S11 E56
ECI TMCB FP ACKN L
74S00 E6B
DNI TMCB TOK L
(DRI) UBCB ACKN B H
TMCB HONOR T L
74S04 E57

TMCB PIRQ L
TMCA HONOR PWRF L
TMCC AERF (1) L
TMCB TOK L
UBCB PARITY ERR L
TMCA HONOR SLY L
TMCA HONOR FP TRAP L
TMCB SEGT L
74H30 E55
UBCE PUPF (3) L
74S04 E85
FN1 74H50 E64 FV2 TMCB PF(0) * (SF +TF) H
74H50 E64 FP2 TMCB PF(0) * (SF+-TF) H
TMCC SERF(1) L

TMCC SEG ABORTED (1) H
TMCC AERF (1) H
74H50 E58
EE2 TMCB SEGT L
TMCA HONOR SEGT H
TMCC SERF (1) H
74H50 E58
EE1 TMCB PWRF L
TMCA HONOR PWRF L
74S04 E57
TMCB HONOR PWRF H
TMCC BLOCK STROBE (1) H
8885 E57
EE2 TMCB TRAP INH L
74S00 E6B
DMI TMCB PIRQ L
TMCA HONOR PIR7 L
TMCA HONOR PIR6 L
TMCA HONOR PIR5 L
TMCA HONOR PIR4 L
TMCB HONOR PIR3 L
TMCB HONOR PIR2 L
TMCB HONOR PIR1 L
74H30 E69

PRIORITY ARBITRATION; TRAP VECTORS SLOT 11

FIRST USED ON OPTION/MODEL	QTY.	DESCRIPTION	PART NO.	ITEM NO.
11/45		PARTS LIST		

UNLESS OTHERWISE SPECIFIED DIMENSION IN INCHES. TOLERANCES
DECIMALS: XXX ± .005, XX ± .02, X ± .1 — ANGLES: ±0° 30'
REMOVE BURRS AND BREAK SHARP CORNERS SURFACE QUALITY ✓
MATERIAL —
FINISH —

DRN. J.P. Long DATE 6/25/71
CHK. D. Page DATE 3/6/72
ENG. Rick Merritt DATE 3/6/72
PROJ. ENG. Rick Merritt DATE 3/6/72
PROD. [illegible] DATE 3/15/72

digital EQUIPMENT CORPORATION MAYNARD MASSACHUSETTS

TITLE: TRAP & MISC. CONTROL
TMCB

NEXT HIGHER ASSY. B-DD-11/45-0
SCALE —
SHEET 3 OF 7

SIZE D | CODE CS | NUMBER M8105-0-1 | REV. K
DIST.

REVISIONS | REV. | CHANGE NO. | CHK

DEC FORM NO 12-0-0

The drawing and specifications, herein, are the property of Digital Equipment Corporation and shall not be reproduced or copied or used in whole or in part as the basis for the manufacture or sale of items without written permission.

TMCC ODD ADRS ERR L
UBCB PARITY ERR L
UBCB TIME OUT (1) L
74S11 E29
TMCC BUS ERROR L
+5V
R24 10K 1/4W 5%
SSRC RTIIC ABORT FLG L
TMCD SL RED L
74S74 E38
EJ1
TMCC ABORT H
74S64 E36
TMCC +3V H
74S04 E24
UBCB PE ABORT L
TMCE PAUSES L
74S00 E87
DP1
TMCC ABORT CLR L
TMCC TS3 CLK H
TMCD SL RED L
SSRC RTIIC ABORT FLG L
TMCC BUS ERROR L
74S10 E44
TMCC CLK FLAGS H
RACB UBSD01 H
TMCC KERNEL RG(1) H
74S20 E39
TMCB HONOR PWRF H
74S85 E24
TMCC BLOCK STROBE (1) H
74S74 E37
TMCE CLK CONF H
74S10 E19
AV2
TMCC AC CLEAR L
TMCC BCT02 B L
RACC UBCT02 H
74S04 E26
TMCC +3V H
TMCA HONOR SLV H
UBCB ACKN B H
74S11 E78
74S74 E41
R17 1K DE2
TMCC SERF (1) H
UBCB ACKN B H
TMCC SERF(0) H
74S11 E29
TMCC STROBE INH L
UBCE INIT L
74S20 E30
TMCC TS3 CLK H
RACC UBCT01 H
RACC UBCT00 H
74S11 E29
TIGD T4 H
CJ2
R1B 120Ω
R1A
+5V
TMCC +3V H
TMCC +3V H
TIGB TF L
74S112 E27
R3
R4 120Ω
+5V
BT2
TMCC FREE CLK (1) H
CB1
TMCC FREE CLK (0) H
GRAC GRA3 L
BU1
TMCE BUST H
74S00 E23
UBCC DATI L
CF2
RACB UBAX00 H
CD1
74S64 E25
RACC UBCT02 H
RACC UBCT00 H
PDRD PSIH (0) H
74S20 E08
TMCE PAUSES H
UBCE INIT L
CA1
TMCC KERNAL RG (1) H
TMCC KERNAL RG (0) H
GRAC GD6 L
CB2
RACC UBCT 01 H
74S04 E18
TMCC BCT01 B L
TIGE TS3 L
CS2
R9
+5V
74S04 E36
TMCC TS3 CLK H
R10
TMCC TS2 CLK H
TIGE TS2 L
CK1
R11
R12
+5V
TMCC TS2 CLK H
UBCF CNSL ACT (0) H
74S11 E31
TMCC CLK FLAGS H
TMCC KERNEL RG (0) H
RACB UBSD01 H
74S20 E39
TMCC BUS ERROR L
SSRC RTIIC ABORT FLG L
74S00 E23
TMCC +3V H
74S74 E41
R16 1K DE1
TMCC AERF MAT H
TMCC AERF (1) H
TMCC AERF (0) H
TMCB CLR INTRF L
IRCD BYIN H
BF1
74S04 E26
DAPB BMMAPD H
RACC UBSC02 H
RACC UBSC01 H
74S00 E23
74S64 E28
BE1
TMCC ODD ADRS ERR L
RACC UBBC00 H
TMCC BSC01 B L
TMCC +3V H
IRCC SM357 H
DD1
SSRC RTIIC ABORT FLG L
74S74 E40
TMCC SEG ABORTED (1) H
UBCF CNSL ACT (0) H
74S00 E87
UBCE INIT L
UBCB ACKN B H
74S11 E31
TMCC INIT + ACKN L
TMCC SERF(1) H
TMCC ABORT CLR L
TMCD SLRED L
TMCA HONOR PWRF L
74S04 E36
74H50 E15
TMCC PRIORITY CLR L

R12, R19, R3, R9, R10, R11 ARE SPARE'S
NO VALUE IS ASSIGNED.

AERF ; SERF; ODD ADDRESS SLOT11

FIRST USED ON OPTION/MODEL	QTY.	DESCRIPTION	PART NO.	ITEM NO.
1/45		PARTS LIST		

UNLESS OTHERWISE SPECIFIED DIMENSION IN INCHES TOLERANCES
DECIMALS: XXX ± .005, XX ± .02, X ± .1 — ANGLES: ±0° 30'
REMOVE BURRS AND BREAK SHARP CORNERS SURFACE QUALITY ✓
MATERIAL —
FINISH —

DRN T. Gibbons 6-29-71
CHK'D Ken Lee 7/1/72
ENG Judy Mente 7/6/72
PROJ ENG. Judy Mente 7/6/72
PROG. Tom Nixon 7/15/72
NEXT HIGHER ASSY. B DD-11/45-0
SCALE —
SHEET 4 OF 7

digital EQUIPMENT CORPORATION MAYNARD MASSACHUSETTS

TITLE
TRAP & MSC CONTROL (TMCC)

SIZE D | CODE CS | NUMBER M8105-0-1 | REV K
DIST.

REVISIONS: REV. | CHANGE NO. | CHK

DEC FORM NO. D80 203-0

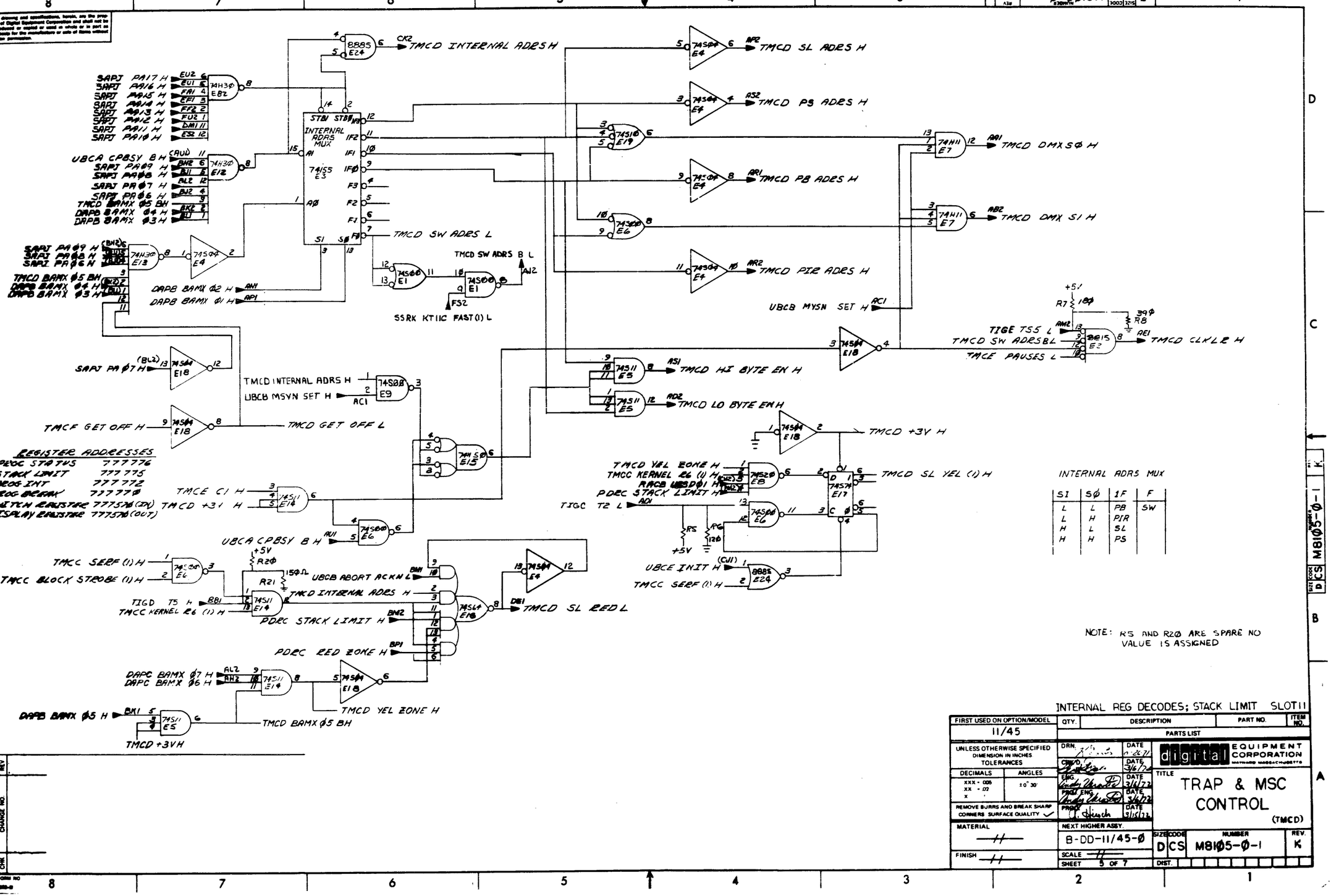

TMCD INTERNAL ADRS H
TMCD SL ADRS H
TMCD PS ADRS H
TMCD PB ADRS H
TMCD PIR ADRS H
TMCD DMX SØ H
TMCD DMX S1 H
TMCD SW ADRS L
TMCD SW ADRS B L
SSRK KT11C FAST(1) L
UBCB MYSN SET H
TIGE TS5 L
TMCD SW ADRS B L
TMCE PAUSES L
TMCD CLKLR H
TMCD HI BYTE EN H
TMCD LO BYTE EN H
TMCD +3V H
TMCD SL YEL (1) H
TMCD INTERNAL ADRS H
UBCB MSYN SET H
TMCF GET OFF H
TMCD GET OFF L
REGISTER ADDRESSES
PROC STATUS 777776
STACK LIMIT 777775
PROG INT 777772
PROG BREAK 777770
SWITCH REGISTER 777570 (IN)
DISPLAY REGISTER 777570 (OUT)
TMCE C1 H
TMCD +3V H
UBCA CPBSY B H
TMCC SERF (1) H
TMCC BLOCK STROBE (1) H
UBCB ABORT ACKN L
TMCD INTERNAL ADRS H
TIGD T5 H
TMCC KERNEL R6 (1) H
PDRC STACK LIMIT H
TMCD SL RED L
PDRC RED ZONE H
DAPC BAMX Ø7 H
DAPC BAMX Ø6 H
TMCD YEL ZONE H
DAPB BAMX Ø5 H
TMCD BAMX Ø5 BH
TMCD +3V H
TMCD YEL ZONE H
TMCC KERNEL R6 (1) H
RACB USDØ1 H
PDRC STACK LIMIT H
TIGC T2 L
UBCE INIT H
TMCC SERF (1) H
INTERNAL ADRS MUX
NOTE: R5 AND R2Ø ARE SPARE NO VALUE IS ASSIGNED
INTERNAL REG DECODES; STACK LIMIT SLOT11
FIRST USED ON OPTION/MODEL 11/45
QTY. DESCRIPTION PART NO. ITEM NO.
PARTS LIST
UNLESS OTHERWISE SPECIFIED DIMENSION IN INCHES TOLERANCES
DECIMALS ANGLES
REMOVE BURRS AND BREAK SHARP CORNERS SURFACE QUALITY
MATERIAL
FINISH
NEXT HIGHER ASSY. B-DD-11/45-Ø
SCALE
SHEET 5 OF 7
digital EQUIPMENT CORPORATION MAYNARD MASSACHUSETTS
TITLE TRAP & MSC CONTROL (TMCD)
SIZE D CODE CS NUMBER M81Ø5-Ø-1 REV. K
DIST.
REVISIONS
CHANGE NO.
CHK

92

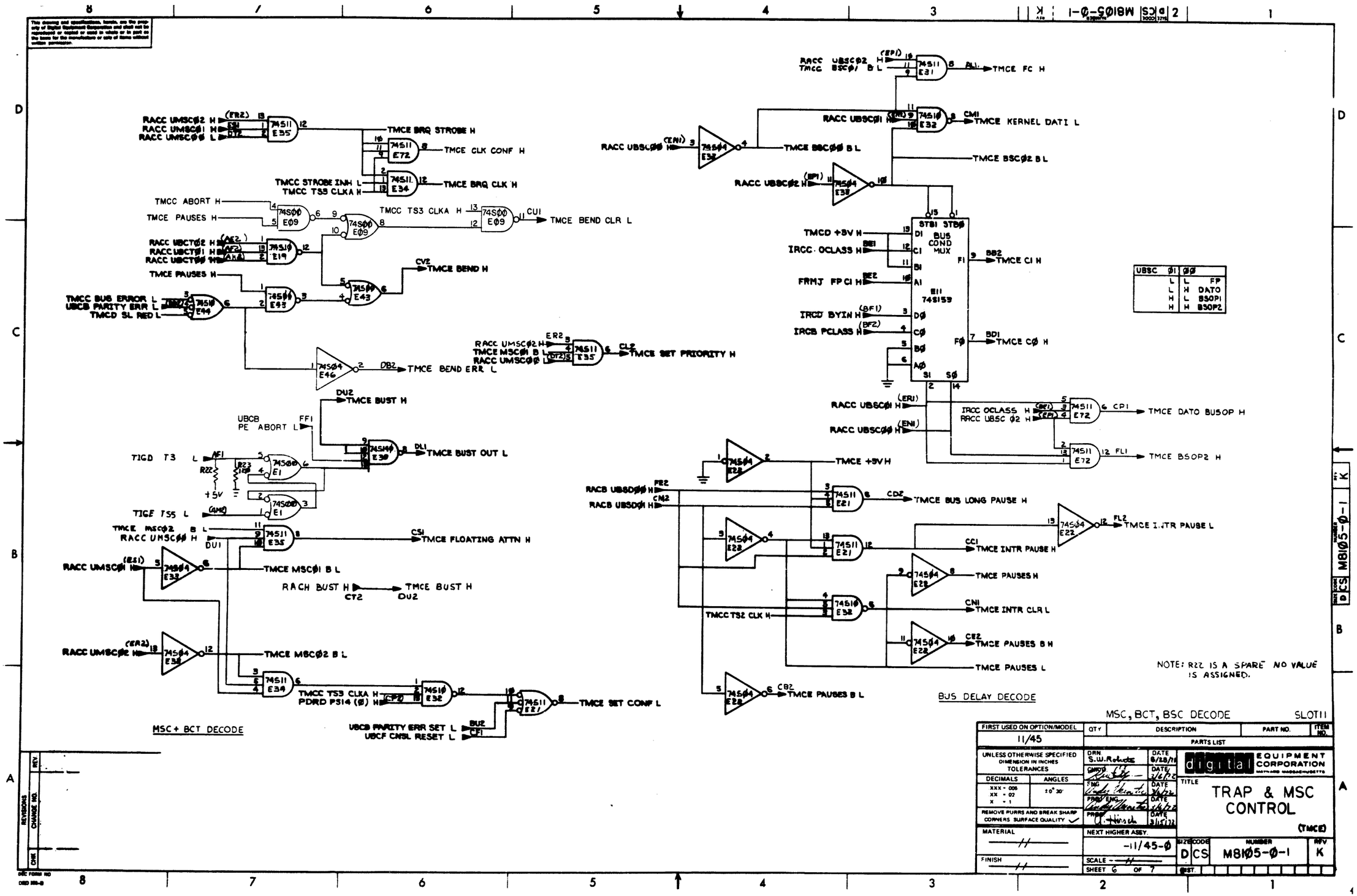

MSC+ BCT DECODE
BUS DELAY DECODE
NOTE: R22 IS A SPARE NO VALUE IS ASSIGNED.
MSC, BCT, BSC DECODE
SLOT11
FIRST USED ON OPTION/MODEL
11/45
UNLESS OTHERWISE SPECIFIED DIMENSION IN INCHES
TOLERANCES
DECIMALS
ANGLES
REMOVE BURRS AND BREAK SHARP CORNERS SURFACE QUALITY
MATERIAL
FINISH
NEXT HIGHER ASSY.
-11/45-Ø
SCALE
SHEET 6 OF 7
digital EQUIPMENT CORPORATION
TITLE
TRAP & MSC CONTROL
(TMCE)
SIZE D
CODE CS
NUMBER M81Ø5-Ø-1
REV K

93

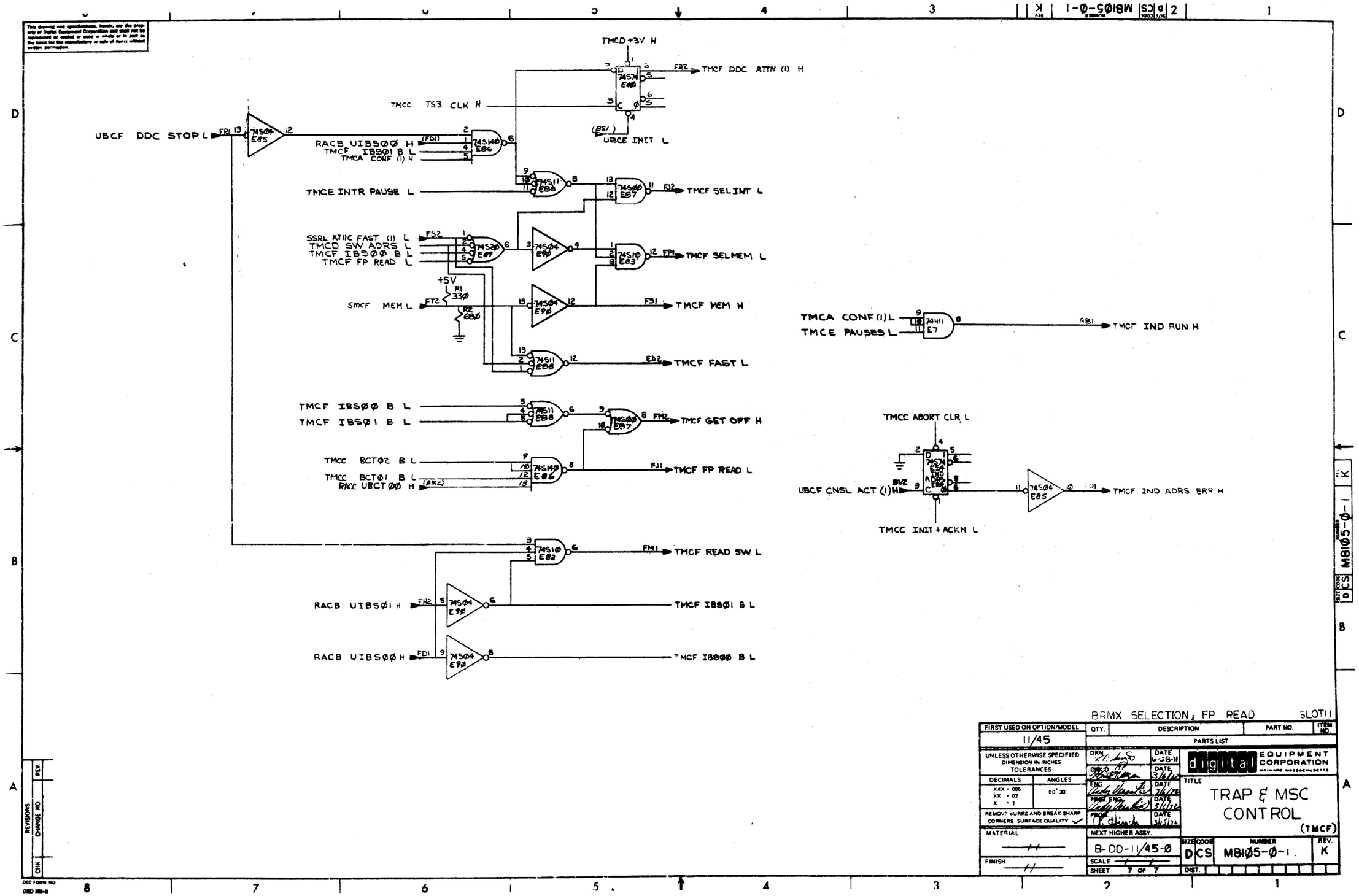

TMCD +3V H
TMCF DDC ATTN (1) H
TMCC TS3 CLK H
UBCF DDC STOP L
RACB UIBSØØ H
TMCF IBSØ1 B L
TMCA CONF (1) H
UBCE INIT L
TMCE INTR PAUSE L
TMCF SELINT L
SSRL KT11C FAST (1) L
TMCD SW ADRS L
TMCF IBSØØ B L
TMCF FP READ L
TMCF SELMEM L
+5V
SMCF MEM L
TMCF MEM H
TMCF FAST L
TMCA CONF (1) L
TMCE PAUSES L
TMCF IND RUN H
TMCF IBSØØ B L
TMCF IBSØ1 B L
TMCF GET OFF H
TMCC ABORT CLR L
TMCC BCTØ2 B L
TMCC BCTØ1 B L
RACC UBCTØØ H
TMCF FP READ L
UBCF CNSL ACT (1) H
TMCF IND ADRS ERR H
TMCC INIT + ACKN L
TMCF READ SW L
RACB UIBSØ1 H
TMCF IBSØ1 B L
RACB UIBSØØ H
TMCF IBSØØ B L
BRMX SELECTION; FP READ
SLOT11
FIRST USED ON OPTION/MODEL
11/45
QTY.
DESCRIPTION
PART NO.
ITEM NO.
PARTS LIST
UNLESS OTHERWISE SPECIFIED
DIMENSION IN INCHES
TOLERANCES
DECIMALS
ANGLES
REMOVE BURRS AND BREAK SHARP CORNERS SURFACE QUALITY
MATERIAL
FINISH
NEXT HIGHER ASSY.
B-DD-11/45-Ø
SCALE
SHEET 7 OF 7
digital EQUIPMENT CORPORATION
TITLE
TRAP & MSC CONTROL
(TMCF)
SIZE D
CODE CS
NUMBER M81Ø5-Ø-1
REV. K
DIST.
REVISIONS
CHANGE NO.
REV.
CHK

94

THIS DRAWING AND SPECIFICATIONS, HEREIN, ARE THE PROPERTY OF DIGITAL EQUIPMENT CORPORATION AND SHALL NOT BE REPRODUCED OR COPIED OR USED IN WHOLE OR IN PART AS THE BASIS FOR THE MANUFACTURE OR SALE OF ITEMS WITHOUT WRITTEN PERMISSION. COPYRIGHT © 1975 DIGITAL EQUIPMENT CORPORATION

NOTES:

1. MOUNT D10 AS SHOWN IN DETAIL A
2. FORM BEND LEADS
3. INSERT FACING TOWARD HANDLE.

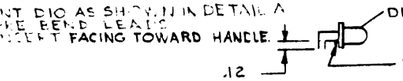

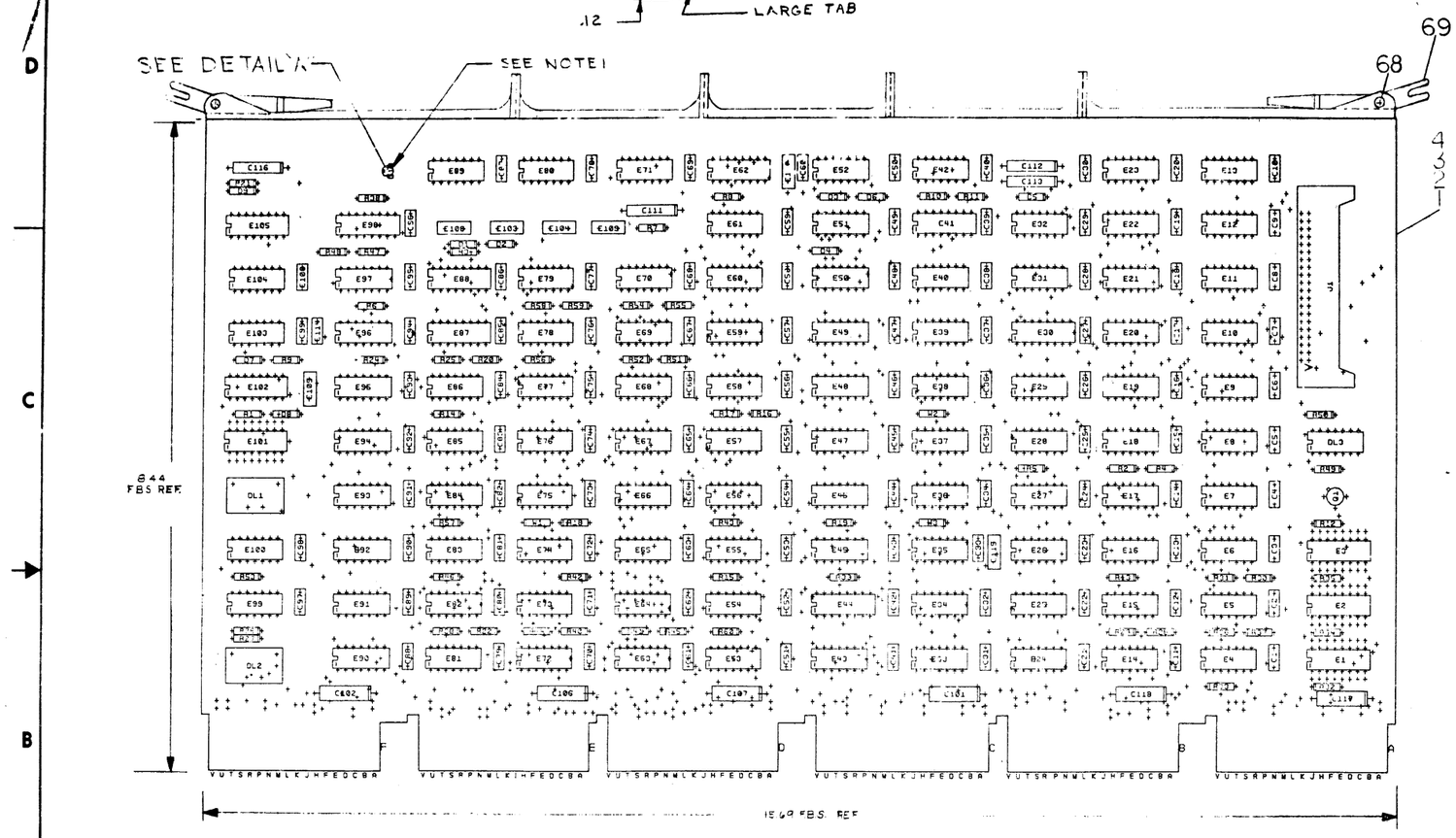

REF				
REF		X-Y COORDINATE HOLE LOCATION	K 09-M3119 0-4	1
REF		ASSY/DRILLING HOLE LAYOUT	D-AH-M3119-0-5	2
REF		MODULE ECO HISTORY	D-MH-M8119-0-E	3
1		ETCHED CIRCUIT BOARD	5011908	4
1	C116	CAPACITOR, 2.2, 35V, 10% TANT	1002431	5
7	C102,C106,C107,C112,C118, C117,C101	CAPACITOR, 6.8, 35V, 10% TANT	1005308	6
101	C1 THRU C100,C114	CAPACITOR, .01, 100V, 20%	1001810 -01	7
4	C103,C104,C109,C109	CAPACITOR, 1200pf, 100V, 5% DM	1002424	8
2	C105,C110	CAPACITOR, 330pf, 100V, 5% DU	1000023	9
2	C111,C113	CAPACITOR, .47uf, 35V, 10% TANT	1005965	10
1	C115	CAPACITOR, 22pf, 100V, 5%	1005820	11
9	D1 THRU D9	DIODE, D864	1100114	12
1	D10	DIODE, LED	1110324	13
5	R1,R3,R6,R8,R21	RESISTOR, 15K, 1/4W, 5%	1300496	14
4	R2,R22,R24,R39	RESISTOR, 330, 1/4W, 5%	1300295	15
4	R4,R19,R23,R25	RESISTOR, 680, 1/4W, 5%	1301424	16
9	R5,R13,R26,R27,R42,R43,R46, R53,R57	RESISTOR, 1K, 1/4W, 5%	1300365	17
2	R7,R11	RESISTOR, 20K, 1/4W, 5%	1302391	18
2	R9,R10	RESISTOR, 30K, 1/4W, 5%	1302394	19
1	R12	RESISTOR, 3.9K, 1/4W, 5%	1300444	20
2	R14,R18	RESISTOR, 100, 1/4W, 5%	1300229	21
8	R15,R52,R55,R56,R58,R60,R50 R20	RESISTOR, 150, 1/4W, 5%	1300250	22
9	R16,B29,R30,R34,R36,R44,R47 R32,R40	RESISTOR, 180, 1/4W, 5%	1301322	23
10	R17,R28,R31,R33,R35,R37,R45 R48,R41,R38	RESISTOR, 390, 1/4W, 5%	1300309	24
1	R49	RESISTOR, 220 1/4W, 5%	1300271	25
1	E87	I.C. DEC 7451-4	1910550	26
3	R51,R54,R59	RESISTOR ENG OPTION NOT INST.		27
1	Q1	TRANSISTOR, DEC 30098	1503100	28
1	DL3	DELAY LINE 125 NS	1611300	29
1	DL2	DELAY LINE 100 NS	1609559	30
1	DL1	DELAY LINE 50 NS	1609428	31
4	E4,E83,E56,E33	I.C. DEC 8640	1911469	32
2	E5,E7	I.C. DEC 7400	1905575	33
3	E5,E70,E36	I.C. DEC 74H04	1909931	34
3	E9,E12,E13	I.C. DEC 7474	1905547	35
2	E8,E19	I.C. DEC 7408	1910155	36
2	E10,E72	I.C. DEC 74H30	1909059	37
2	E11,E18	I.C. DEC 7404	1909386	38
9	E104,E22,E27,E51,E60,E81, E85,E92	I.C. DEC 74S00	1910532	39
3	E15,E38,E95	I.C. DEC 74H00	1909056	40
2	E16,E52	I.C. DEC 74H11	1909267	41
1	E49	I.C. DEC 74S74-45	1910950	42
11	E17,E29,E50,E67,E69,E84,E79 E69,E77,E86,E100	I.C. DEC 74S74	1910544	43
8	E20,E21,E53,E99,E54,E49,E28,E31	I.C. DEC 74S40	1910541	44
4	E76,E66,E93,E85	I.C. DEC 74S64	1910542	45
2	E82,E90	I.C. DEC 74H50	1909060	46
2	E89,E00	I.C. DEC 8815	1909713	47
2	E96,E103	I.C. DEC 74S140	1910546	48
2	E74,E23	I.C. DEC 74S10	1910536	49

QTY	REF. DESIGNATION	DESCRIPTION	PART NO.	ITEM NO.

FIRST USED ON OPTION MODEL

PARTS LIST

ETCH BOARD REV. A

IC 74157	8	16
IC 74123	8	16
IC 74175	8	16
IC 745112	8	16
IC 745174	8	16
IC 380	1	8
IC TYPE	GND	+5V

GND AND 5V ARE USUALLY PIN 7 AND 14 RESPECTIVELY EXCEPTIONS ARE STATED ABOVE

IC PIN LOCATIONS

DEC NO.	EIA NO.	DEC NO.	EIA NO.

SEMICONDUCTOR CONVERSION CHART

REV.	REVISIONS	CHANGE NO.	OK'T
A	M8119-30001		

R Boucher (LEC) 6-2-76
R HOUCHER
M-119 DRAWING
Scott Rogers 6-2-76
V BOGEN
Hardware Specification
SPEC M8119-30001

Drawn
Design
Trace
Tech Engineer
Mfg Engineer
Quality Assy
Prod Engineer
Prod Mgr
Tool Engineer Assy
SCALE
SHEET 1 OF 15

DATE

DIGITAL

TITLE
UNIBUS & CONSOLE CONTROL

SIZE	CODE	NUMBER	REV.
D		CS M8119-Ø-1	B

DIST.

DEC FORM NO. DRD 135 B

95

THIS DRAWING AND SPECIFICATIONS, HEREIN, ARE THE PROPERTY OF DIGITAL EQUIPMENT CORPORATION AND SHALL NOT BE REPRODUCED OR COPIED OR USED IN WHOLE OR IN PART AS THE BASIS FOR THE MANUFACTURE OR SALE OF ITEMS WITHOUT WRITTEN PERMISSION.
COPYRIGHT © 1971 DIGITAL EQUIPMENT CORPORATION

1	E98	I.C. DEC 74S112	1910545	51
2	E61,E42	I.C. DEC 74S51	1911712	52
2	E45,E46	I.C. DEC 74S20	1910539	53
4	E35,E37,E39,E89	I.C. DEC 74H74	1900367	54
1	E26	I.C. DEC 74H18	1900557	55
3	E34,E24,E57	I.C. DEC 6305	1910349	56
1	E30	I.C. DEC 74175	1910351	57
7	E32,E40,E48,E91,E63,E78,E97	I.C. DEC 74S11	1910537	59
5	E102,E41,E88,E105,E62	I.C. DEC 74123	1910438	60
4	E14,E43,E25,E55	I.C. DEC 6881	1909705	62
1	E44	I.C. DEC 74157	1910655	63
6	E47,E75,E73,E82,E94,E71	I.C. DEC 74S04	1910534	64
4	E1,E2,E3,E101	SPARE I.C.'s		65
3	W1,W2,W3	JUMPER	9009185	66
1	J1	CONNECTOR, BERG	1209941-02	67
12		EYELET, HANDLE	9006732	68
1		HANDLE, HEX	1210711-02	69
A/R		WIRE,30 AWG GRN	9 0574 0-65	70

REVISIONS

CHK	CHANGE NO	REV

TITLE: UNIBUS & CONSOLE CONTRO

SIZE: D | CODE: CS | NUMBER: M8119-0-1 | REV: B

SCALE | SHEET 2 OF 15 | DIST.

DEC FORM NO DRD 1-37

96

This drawing and specifications, herein, are the property of Digital Equipment Corporation and shall not be reproduced or copied or used in whole or in part as the basis for the manufacture or sale of items without written permission. © 1975 DIGITAL EQUIP. CORP.

+5V R26 1K
74S40 E99
74S40 E99
74S40 E54
74S40 E54
74S04 E73
74S04 E73
74S04 E73
74S04 E73
74H04 E70
74H04 E70
74H04 E70
74S00 E60
74S00 E60
74S00 E46
74S00 E51
74H10 E26
74S11 E63
74S11 E63
74S11 E78
74S11 E96
74S74 E68
74S74 E69
74S74 E79
74S74 E79
74S74 E69
74S74 E68
74S64 E66
74H50 E58
74S10 E74
8640 E83
8640 E83
8815 E59
8881 E55
8885 EST
LOCATION BETWEEN S2 AND S3
100 NS
R27 1K
R43 1K
R96 150
R49 180
R50 330
R16 180
R17 330
R44 180
R45 330
R42 1K
DM1
UBCA D SACK H
UBCA D SACK L
UBCA UNIBUS RELEASE H
UBCD NPR (Ø) L
UBCD NPG (Ø) L
BUSA BBSY L
UBCA BBSY L
UBCA BBSY MAT H
BUSA SACK L
UBCA SACK B H
UBCA +3V H
UBCC DATIPL
UBCC MSYN (Ø) H
UBCA +3V H
TMCE BUST H
UBCA GET BUS (1) H
TMCE BUST OUT L
UBCA BUST OUT B H
TIGD T3 B H
UBCB CLR UNI H
UBCA +3V H
UBCB MSYN SET H
UBCB CLR UNI H
DATIP HOLD (Ø) H
UBCD GRANT BR (1) L
UBCA BBSY L
UBCD LONG SACK L
UBCD GRANT BR H
UBCA PASSIVE (Ø) H
UBCC INTR B DLY L
UBCA INTR RESTART
TIGD TJ2 H
UBCE INIT L
TIGD T5 L
TIGE TS4 L
UBCA TS4 CLK H
TIGD T3 B H
TMCE BEND ERR L
TMCE PAUSES B H
UBCB DESKEW COMP H
TMCC ABORT H
UBCB MSYN (1) H
UBCC SSYN B H
SSRC KTIIC RQORT FLG L
UBCB TIME OUT (Ø) H
UBCA SSYN RESTART H
TIGE TS2 L
UBCA TS2 CLK H
TIGC TIB L
UBCA CONTROL OK (1) L
UBCE INIT L
UBCA CONTROL OK MAT H
UBCA CONTROL OK H
UBCA CPBSY (1) H
UBCA CPBSY (Ø) H
UBCA GET BUS (1) H
UBCC SSYN * C1 L
UBCA DESKEW ADRS H
UBCA CPBSY B H
UBCB MSYN (Ø) L
UBCA GET BUS (Ø) L
UBCA BLP DESKEW H
UBCC DATIP L
TMCE BUS LONG PAUSE H
BUSA BBSY L
TIGC TIB H

NOTES:
1. UNLESS OTHERWISE STATED ALL RESISTORS ARE 1/4 5%.

CP BUSY; CONTROL OK; TIG RESTARTS — SLOT 12

FIRST USED ON (CPU)	DEL	QTY.	DESCRIPTION / PART NO.
11/45			
UNLESS OTHERWISE SPECIFIED DIMENSIONS IN INCHES. TOLERANCES: DECIMALS .XXX ± .005, .XX ± .02, .X ± .1; ANGLES ±0° 30'. REMOVE BURRS AND BREAK SHARP CORNERS. SURFACE QUALITY ✓			
MATERIAL //			
FINISH //			

EQUIPMENT CORPORATION, MAYNARD, MASSACHUSETTS

TITLE: UNIBUS & CONSOLE CONTROL (UBCA)

B-DD-KB11-Ø | SIZE D | CODE CS | NUMBER M8119-Ø-1 | REV. B | SHEET 1 OF

REVISIONS: REV | CHANGE NO | CHK

DEC FORM NO. DRD 105-B

M8119-Ø-1

97

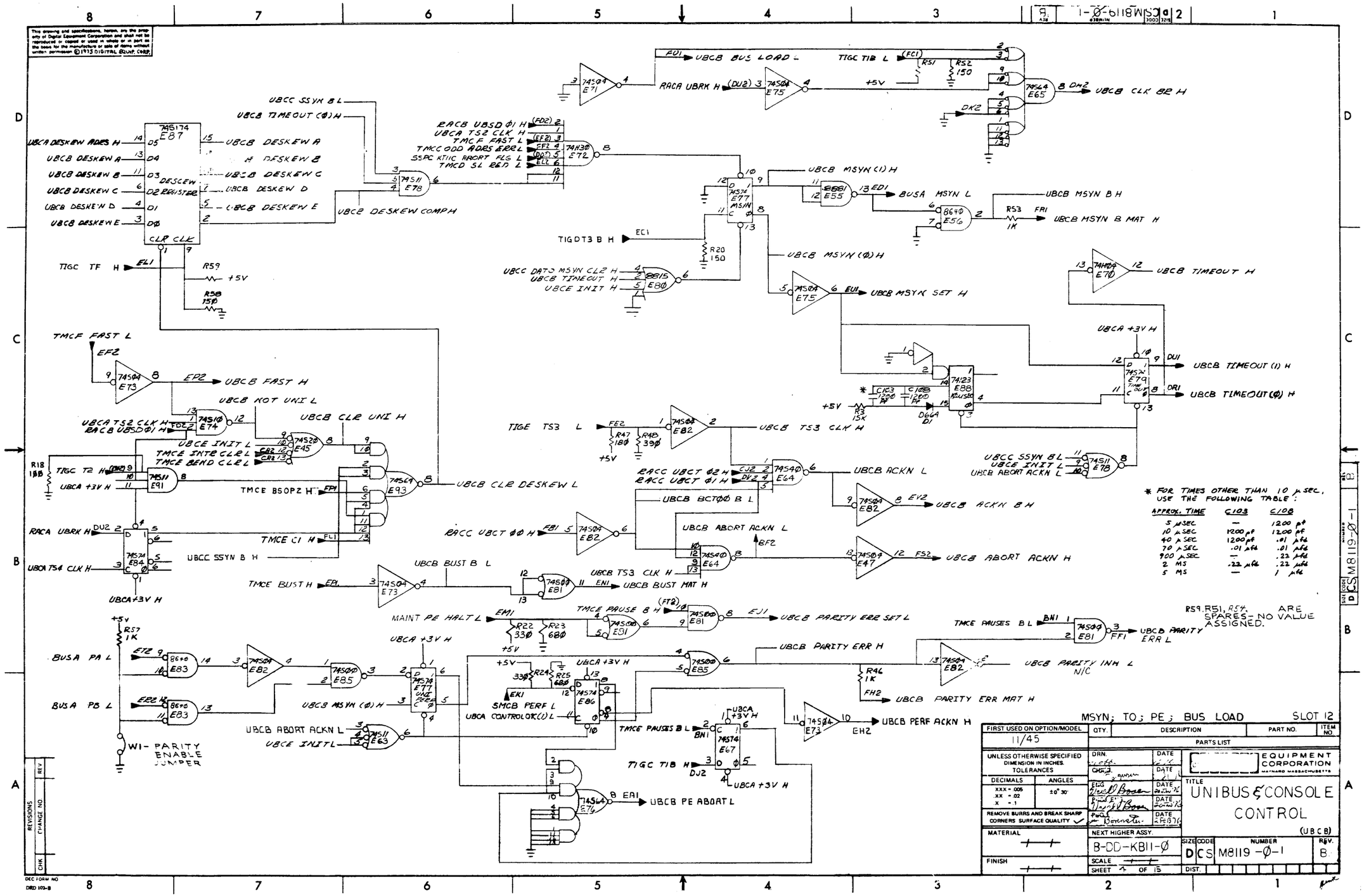

* FOR TIMES OTHER THAN 10 μSEC, USE THE FOLLOWING TABLE:

APPROX. TIME	C103	C108
5 μSEC	—	1200 pf
10 μSEC	1200 pf	1200 pf
40 μSEC	1200 pf	.01 μfd
70 μSEC	.01 μfd	.01 μfd
900 μSEC	—	.22 μfd
2 MS	.22 μfd	.22 μfd
5 MS	—	1 μfd

R59, R51, R54, ARE SPARES - NO VALUE ASSIGNED.

MSYN; TO; PE; BUS LOAD SLOT 12

FIRST USED ON OPTION/MODEL	QTY.	DESCRIPTION	PART NO.	ITEM NO.
11/45		PARTS LIST		

UNLESS OTHERWISE SPECIFIED DIMENSION IN INCHES. TOLERANCES

DECIMALS	ANGLES
XXX = .005	±0° 30'
.XX = .02	
.X = .1	

REMOVE BURRS AND BREAK SHARP CORNERS SURFACE QUALITY ✓

MATERIAL

FINISH

DRN. DATE

CHK'D DATE

ENG DATE 20 Jan 76

PROJ DATE 20 Jan 76

PROJ DATE 2 Feb 76

NEXT HIGHER ASSY. B-DD-KB11-Ø

SCALE

SHEET 4 OF 15

EQUIPMENT CORPORATION MAYNARD MASSACHUSETTS

TITLE UNIBUS & CONSOLE CONTROL (UBCB)

SIZE D CODE CS NUMBER M8119-Ø-1 REV. B

DIST.

REVISIONS CHANGE NO. REV CHK

DEC FORM NO DRD 103-B

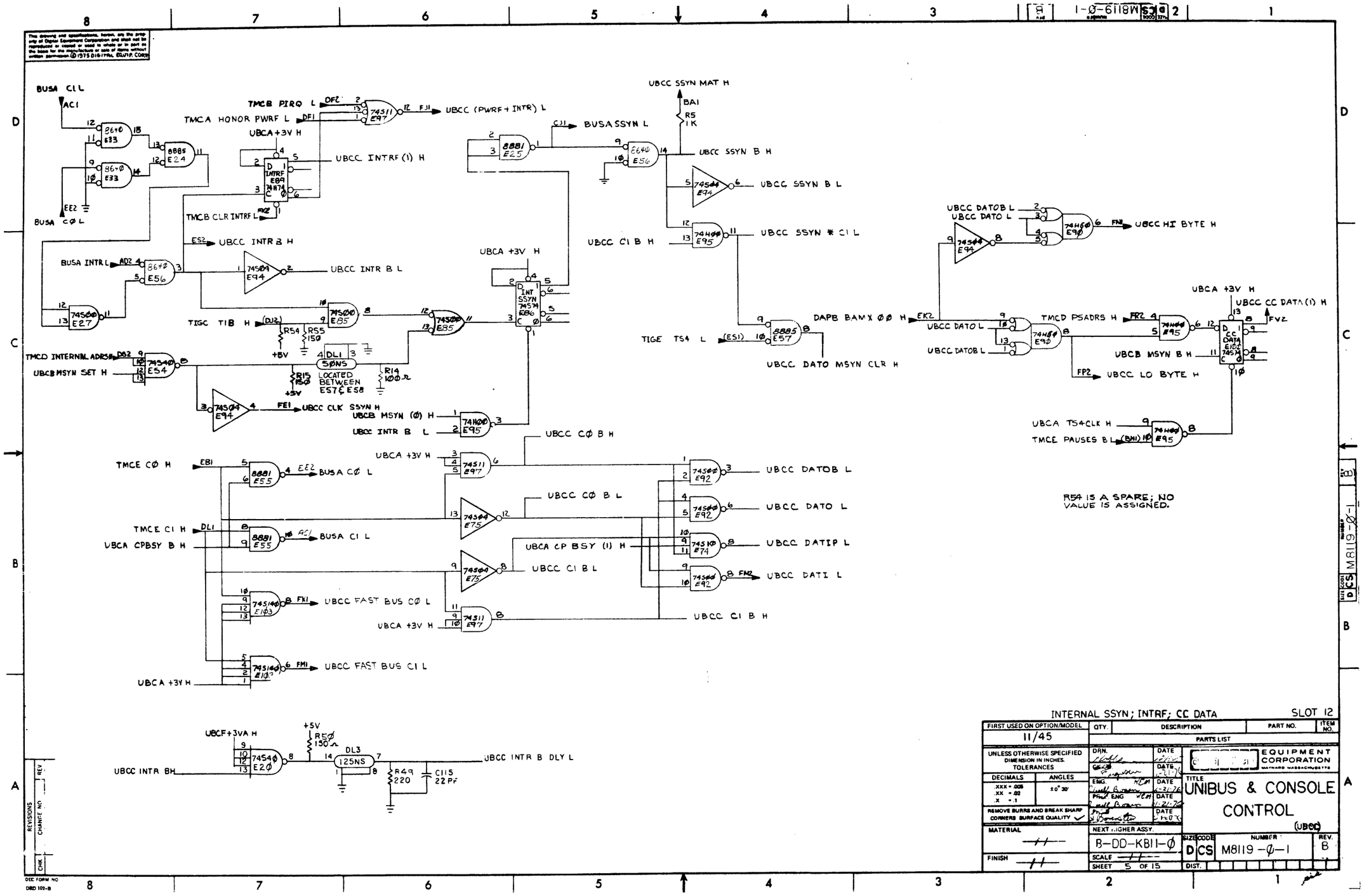

R54 IS A SPARE; NO VALUE IS ASSIGNED.

INTERNAL SSYN; INTRF; CC DATA — SLOT 12

FIRST USED ON OPTION/MODEL	QTY.	DESCRIPTION	PART NO.	ITEM NO.
11/45		PARTS LIST		

UNLESS OTHERWISE SPECIFIED DIMENSION IN INCHES. TOLERANCES

DECIMALS	ANGLES
.XXX = .005	±0° 30'
.XX = .02	
.X = .1	

REMOVE BURRS AND BREAK SHARP CORNERS SURFACE QUALITY ✓

MATERIAL —//—

FINISH —//—

DRN. — DATE 12-1-76
CHK. — DATE 12-1-76
ENG. — DATE 12-21-76
PROJ. ENG. — DATE 12-21-76
DATE 12-1-76

NEXT HIGHER ASSY. B-DD-KB11-Ø

SCALE —//—

SHEET 5 OF 15

EQUIPMENT CORPORATION MAYNARD MASSACHUSETTS

TITLE UNIBUS & CONSOLE CONTROL (UBCC)

SIZE D CODE CS NUMBER M8119-Ø-1 REV. B

DIST.

REVISIONS — REV — CHANGE NO — CHK

DEC FORM NO DRD 102-B

99

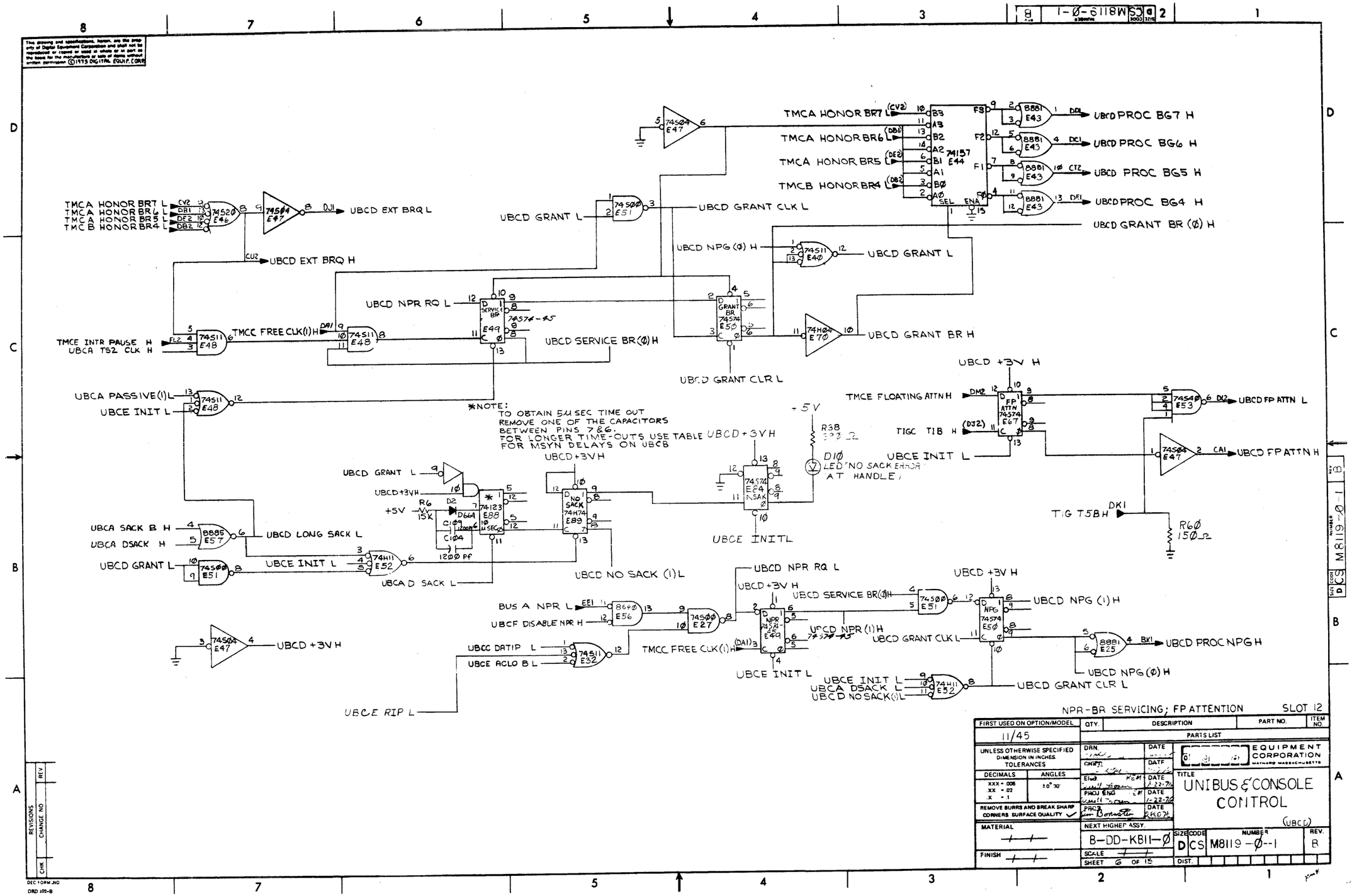

TMCA HONOR BR7 L
TMCA HONOR BR6 L
TMCA HONOR BR5 L
TMCB HONOR BR4 L
UBCD PROC BG7 H
UBCD PROC BG6 H
UBCD PROC BG5 H
UBCD PROC BG4 H
UBCD GRANT BR (Ø) H
UBCD EXT BRQ L
UBCD EXT BRQ H
UBCD GRANT L
UBCD GRANT CLK L
UBCD NPG (Ø) H
UBCD NPR RQ L
UBCD SERVICE BR (Ø) H
UBCD GRANT BR H
UBCD GRANT CLR L
TMCE INTR PAUSE H
UBCA TS2 CLK H
TMCC FREE CLK(1) H
UBCA PASSIVE(1) L
UBCE INIT L
*NOTE:
TO OBTAIN 5μ SEC TIME OUT
REMOVE ONE OF THE CAPACITORS
BETWEEN PINS 7&6.
FOR LONGER TIME-OUTS USE TABLE
FOR MSYN DELAYS ON UBCB
UBCD +3V H
TMCE FLOATING ATTN H
TIGC TIB H
UBCD FP ATTN L
UBCD FP ATTN H
TIG T5B H
R6Ø
15Ø Ω
D1Ø
LED "NO SACK ERROR"
AT HANDLE
UBCA SACK B H
UBCA DSACK H
UBCD LONG SACK L
UBCA D SACK L
UBCD NO SACK (1) L
UBCE INITL
BUS A NPR L
UBCF DISABLE NPR H
UBCC DATIP L
UBCE ACLO B L
UBCE RIP L
UBCD NPR (1) H
UBCD NPG (1) H
UBCD PROC NPG H
UBCD NPG (Ø) H
UBCE INIT L
UBCA DSACK L
UBCD NO SACK (1) L
NPR-BR SERVICING; FP ATTENTION
SLOT 12
FIRST USED ON OPTION/MODEL
11/45
QTY.
DESCRIPTION
PART NO.
ITEM NO.
PARTS LIST
UNLESS OTHERWISE SPECIFIED
DIMENSION IN INCHES.
TOLERANCES
DECIMALS
ANGLES
REMOVE BURRS AND BREAK SHARP CORNERS SURFACE QUALITY
MATERIAL
FINISH
DRN.
CHKD.
ENG.
PROJ ENG
PROG
DATE
EQUIPMENT CORPORATION
MAYNARD MASSACHUSETTS
TITLE
UNIBUS & CONSOLE CONTROL
(UBCD)
NEXT HIGHER ASSY.
B-DD-KB11-Ø
SCALE
SHEET 6 OF 15
SIZE D
CODE CS
NUMBER M8119-Ø-1
REV. B
DIST.
REVISIONS
CHANGE NO
REV
CHK
DEC FORM NO
DRD 102-B

100

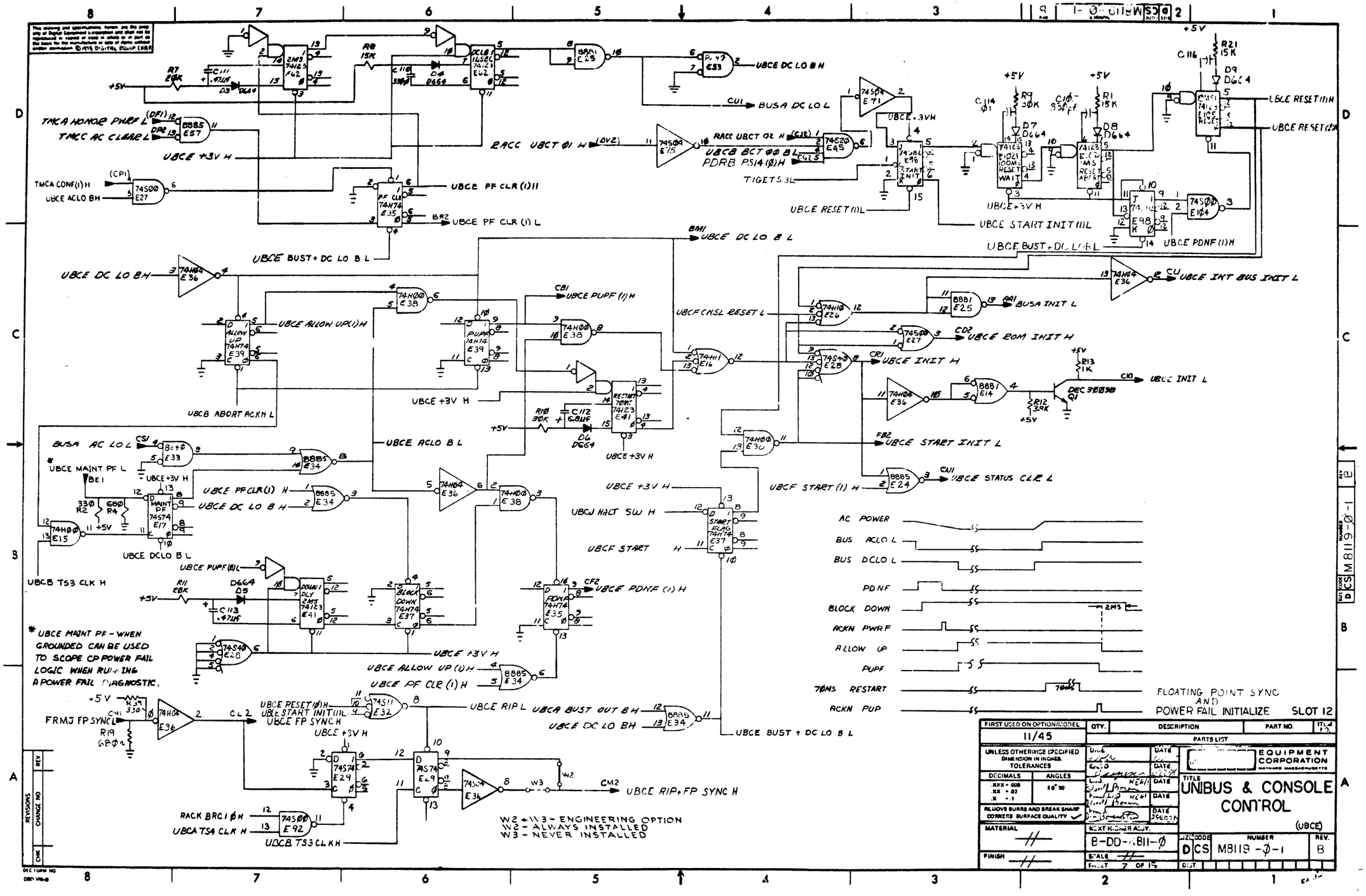

UBCE DC LO B H
BUSA DC LO L
UBCE +3V H
TMCA HONOR PWRF L
TMCC AC CLEAR L
TMCA CONF(1) H
UBCE ACLO BH
UBCE PF CLR (1) H
UBCE PF CLR (1) L
UBCE BUST+DC LO B L
UBCE DC LO B L
UBCE ALLOW UP(1) H
UBCE PUPF (1) H
UBCB ABORT ACKN L
UBCE ACLO B L
BUSA AC LO L
UBCE MAINT PF L
UBCE PF CLR(1) H
UBCE DC LO B H
UBCE DCLO B L
UBCB TS3 CLK H
UBCE PUPF(0) L
UBCE PDNF (1) H
UBCE ALLOW UP (1) H
UBCE PF CLR (1) H
UBCE RESET(0) H
UBCE START INIT(1) L
UBCE FP SYNC H
UBCE RIP L
UBCA BUST OUT B H
UBCE DC LO BH
UBCE BUST + DC LO B L
FRMJ FP SYNC L
UBCE RIP+FP SYNC H
RACK BRC1 0 H
UBCA TS4 CLK H
UBCB TS3 CLK H
UBCE RESET (1) H
UBCE START INIT (1) L
UBCE BUST+DC LO B L
UBCE PDNF (1) H
UBCE INT BUS INIT L
BUSA INIT L
UBCE ROM INIT H
UBCE INIT H
UBCE INIT L
UBCE START INIT L
UBCF START (1) H
UBCE STATUS CLR L
UBCJ HALT SW H
UBCF START H
UBCF CNSL RESET L
RACC UBCT 01 H
UBCB BCT 00 B L
PDRB PS14 (0) H
TIGETS 3L
AC POWER
BUS ACLO L
BUS DCLO L
PDNF
BLOCK DOWN
RCKN PWRF
ALLOW UP
PUPF
70MS RESTART
RCKN PUP
2MS
70MS
* UBCE MAINT PF - WHEN GROUNDED CAN BE USED TO SCOPE CP POWER FAIL LOGIC WHEN RUNNING A POWER FAIL DIAGNOSTIC.
W2 + W3 - ENGINEERING OPTION
W2 - ALWAYS INSTALLED
W3 - NEVER INSTALLED
FLOATING POINT SYNC AND POWER FAIL INITIALIZE
SLOT 12
FIRST USED ON OPTION/MODEL
11/45
QTY.
DESCRIPTION
PART NO.
PARTS LIST
UNLESS OTHERWISE SPECIFIED DIMENSION IN INCHES. TOLERANCES
DECIMALS
ANGLES
REMOVE BURRS AND BREAK SHARP CORNERS SURFACE QUALITY
MATERIAL
FINISH
NEXT HIGHER ASSY.
B-DD-K811-0
SCALE
SHEET 7 OF 15
EQUIPMENT CORPORATION
MAYNARD MASSACHUSETTS
TITLE
UNIBUS & CONSOLE CONTROL
(UBCE)
SIZE D
CODE CS
NUMBER M8119-0-1
REV. B

10

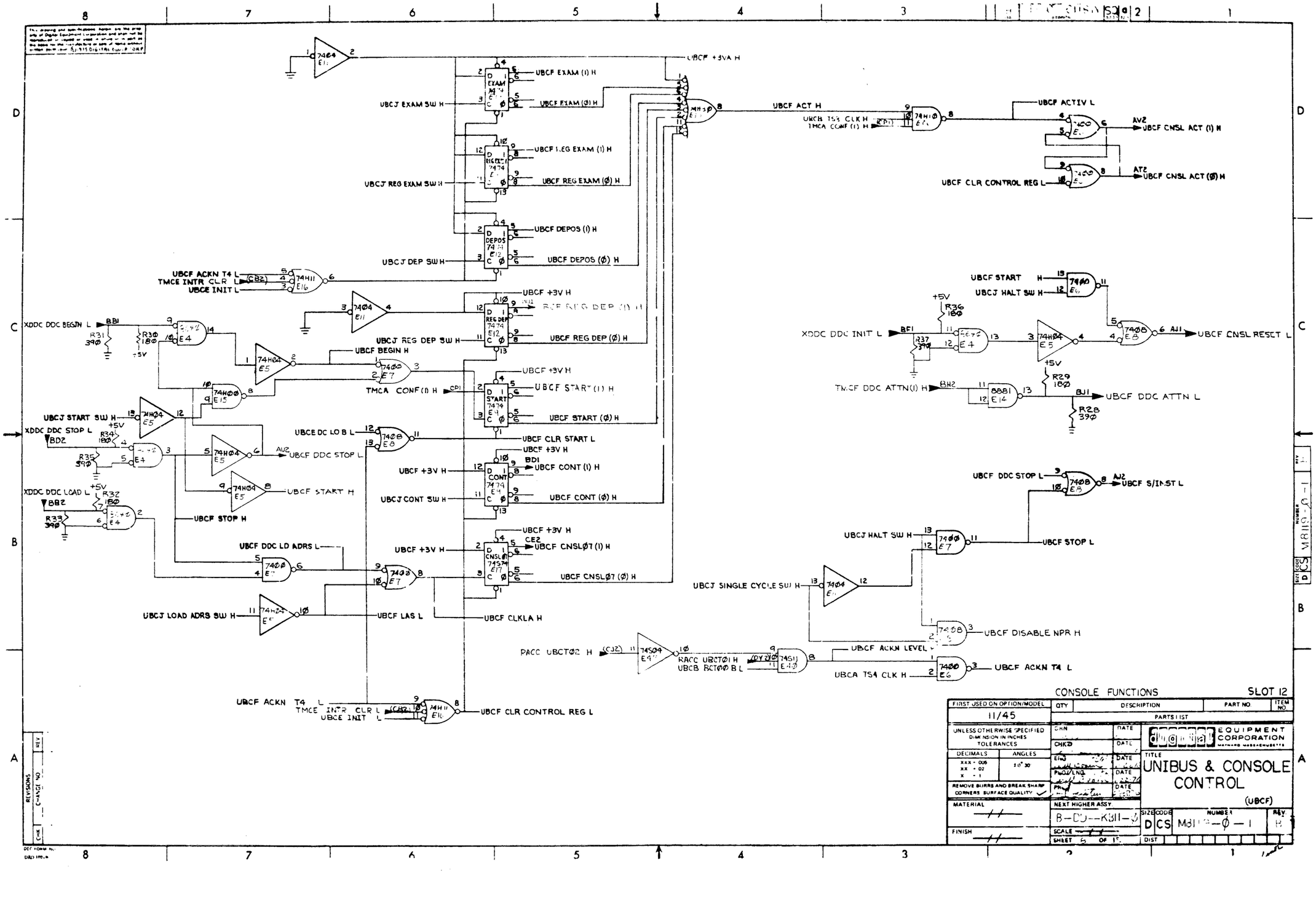
UBCF +3VA H
UBCF EXAM (1) H
UBCJ EXAM SW H
UBCF EXAM (Ø) H
UBCF LEG EXAM (1) H
UBCJ REG EXAM SW H
UBCF REG EXAM (Ø) H
UBCF DEPOS (1) H
UBCJ DEP SW H
UBCF DEPOS (Ø) H
UBCF ACKN T4 L
TMCE INTR CLR L
UBCE INIT L
UBCF +3V H
UBCF REG DEP (1) H
UBCJ REG DEP SW H
UBCF REG DEP (Ø) H
XDDC DDC BEGIN L
UBCF BEGIN H
TMCA CONF (1) H
UBCF +3V H
UBCF START (1) H
UBCJ START SW H
XDDC DDC STOP L
UBCF START (Ø) H
UBCE DC LO B L
UBCF CLR START L
UBCF +3V H
UBCF CONT (1) H
UBCF +3V H
UBCJ CONT SW H
UBCF CONT (Ø) H
XDDC DDC LOAD L
UBCF STOP H
UBCF +3V H
UBCF CNSLØ7 (1) H
UBCF DDC LD ADRS L
UBCF +3V H
UBCF CNSLØ7 (Ø) H
UBCJ LOAD ADRS SW H
UBCF LAS L
UBCF CLKLA H
UBCF ACKN T4 L
TMCE INTR CLR L
UBCE INIT L
UBCF CLR CONTROL REG L
UBCF ACT H
UBCB TS4 CLK H
TMCA CONF (1) H
UBCF ACTIV L
AV2
UBCF CNSL ACT (1) H
AT2
UBCF CNSL ACT (Ø) H
UBCF CLR CONTROL REG L
UBCF START H
UBCJ HALT SW H
+5V
XDDC DDC INIT L
TMCF DDC ATTN (1) H
UBCF CNSL RESET L
UBCF DDC ATTN L
UBCF DDC STOP L
UBCF S/INST L
UBCJ HALT SW H
UBCF STOP L
UBCJ SINGLE CYCLE SW H
UBCF DISABLE NPR H
PACC UBCTØ2 H
PACC UBCTØ1 H
UBCB BCTØØ B L
UBCF ACKN LEVEL
UBCA TS4 CLK H
UBCF ACKN T4 L
CONSOLE FUNCTIONS
SLOT 12
FIRST USED ON OPTION/MODEL
11/45
PARTS LIST
QTY
DESCRIPTION
PART NO.
ITEM NO.
UNLESS OTHERWISE SPECIFIED DIMENSION IN INCHES TOLERANCES
DECIMALS
ANGLES
REMOVE BURRS AND BREAK SHARP CORNERS SURFACE QUALITY
MATERIAL
FINISH
CHN
CHKD
ENG
PROJ LDR
PM
DATE
EQUIPMENT CORPORATION
TITLE
UNIBUS & CONSOLE CONTROL
(UBCF)
NEXT HIGHER ASSY
B-DD--K811-0
SIZE CODE
D CS
NUMBER
M8119-0-1
REV
H
SCALE
SHEET 6 OF 15
DIST
REVISIONS
CHANGE NO.
REV
CHK

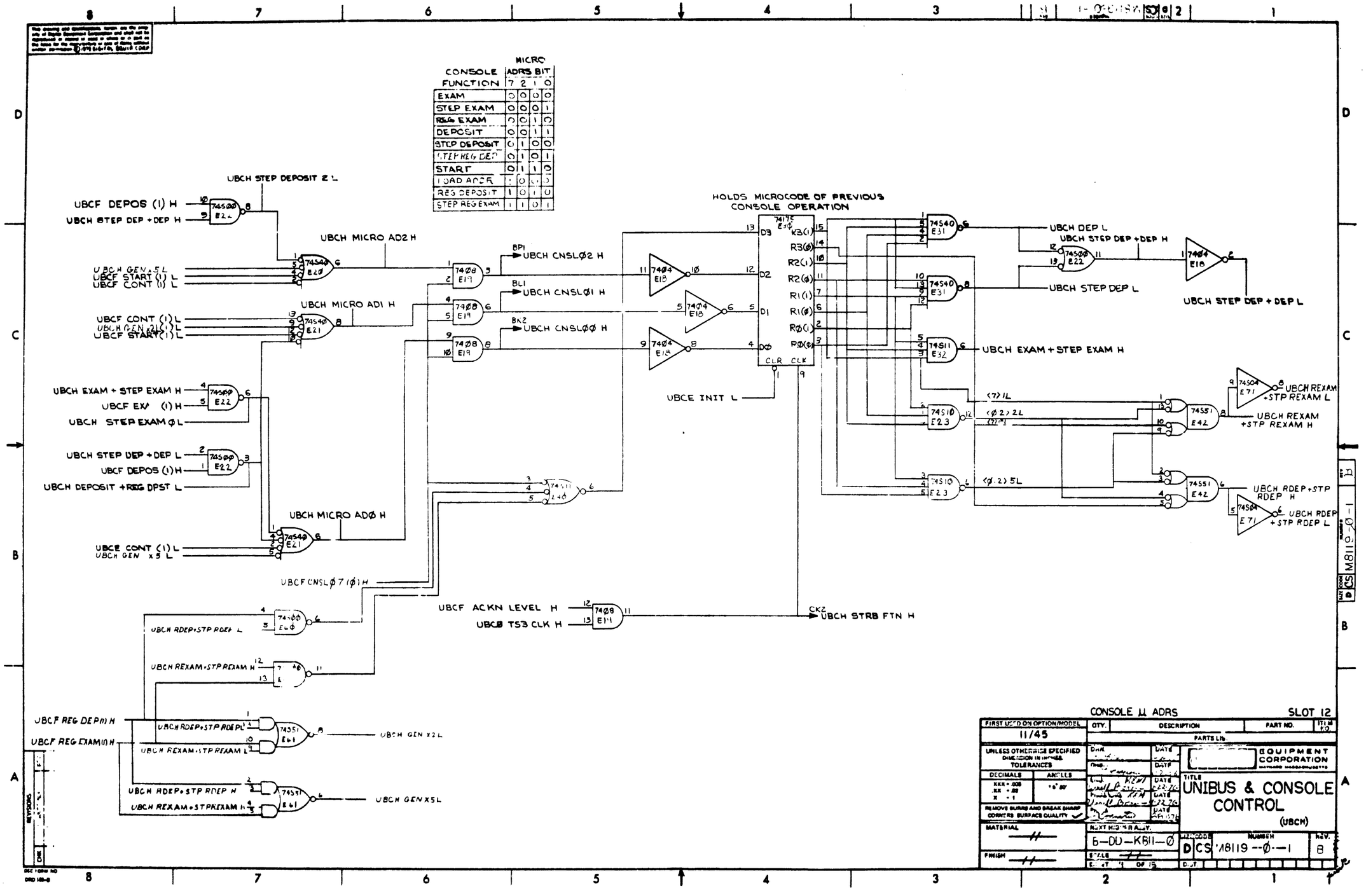

MICRO ADRS BIT
CONSOLE FUNCTION 7 2 1 0
EXAM 0 0 0 0
STEP EXAM 0 0 0 1
REG EXAM 0 0 1 0
DEPOSIT 0 0 1 1
STEP DEPOSIT 0 1 0 0
STEP REG DEP 0 1 0 1
START 0 1 1 0
LOAD ADDR 1 0 0 0
REG DEPOSIT 1 0 1 0
STEP REG EXAM 1 1 0 1
UBCH STEP DEPOSIT 2 L
UBCF DEPOS (1) H
UBCH STEP DEP + DEP H
UBCH MICRO AD2 H
UBCH GEN x5 L
UBCF START (1) L
UBCF CONT (1) L
UBCH MICRO AD1 H
UBCF CONT (1) L
UBCH GEN x2 (1) L
UBCF START (1) L
UBCH EXAM + STEP EXAM H
UBCF EXAM (1) H
UBCH STEP EXAM Ø L
UBCH STEP DEP + DEP L
UBCF DEPOS (1) H
UBCH DEPOSIT + REG DPST L
UBCH MICRO ADØ H
UBCE CONT (1) L
UBCH GEN x5 L
UBCF CNSLØ7 (Ø) H
UBCH RDEP+STP RDEP L
UBCH REXAM+STP REXAM H
UBCF REG DEP (1) H
UBCF REG EXAM (1) H
UBCH RDEP+STP RDEP L
UBCH REXAM+STP REXAM L
UBCH GEN x2 L
UBCH RDEP+STP RDEP H
UBCH REXAM+STP REXAM H
UBCH GEN x5 L
BP1 UBCH CNSLØ2 H
BL1 UBCH CNSLØ1 H
BK2 UBCH CNSLØØ H
HOLDS MICROCODE OF PREVIOUS CONSOLE OPERATION
UBCE INIT L
UBCF ACKN LEVEL H
UBCB TS3 CLK H
CK2 UBCH STRB FTN H
UBCH DEP L
UBCH STEP DEP + DEP H
UBCH STEP DEP L
UBCH STEP DEP + DEP L
UBCH EXAM + STEP EXAM H
UBCH REXAM +STP REXAM L
UBCH REXAM +STP REXAM H
UBCH RDEP+STP RDEP H
UBCH RDEP +STP RDEP L
CONSOLE μ ADRS
SLOT 12
FIRST USED ON OPTION/MODEL
11/45
QTY. DESCRIPTION PART NO. ITEM NO.
PARTS LIST
UNLESS OTHERWISE SPECIFIED DIMENSION IN INCHES TOLERANCES
DECIMALS ANGLES
REMOVE BURRS AND BREAK SHARP CORNERS SURFACE QUALITY
MATERIAL
FINISH
NEXT HIGHER ASSY.
B-DU-KB11-Ø
SCALE
SHEET 1 OF 15
EQUIPMENT CORPORATION
TITLE
UNIBUS & CONSOLE CONTROL
(UBCH)
SIZE CODE NUMBER REV.
D CS M8119-Ø-1 B

This drawing and specifications, herein, are the property of Digital Equipment Corporation and shall not be reproduced or copied or used in whole or in part as the basis for the manufacture or sale of items without written permission © 1975 DIGITAL EQUIP. CORP.

TMCE INTR PAUSE L — BM2 1
TMCE PAUSESB L — (BN1) 2
74H00 E15 — 3 — UBCJ IND PAUSE H

TMCA CONF(1) L — BL2 4
UBCA CPBSY(1) L — 5
74H00 E15 — 6 — UBCJ IND MASTER H

UBC/KNL INTERFACE

SIGNALS TO CONSOLE			SIGNALS FROM CONSOLE	
SAPK DISP ADRSØØ H	AM2	A		
SAPK DISP ADRSØ1 H	AM1	B		
SAPK DISP ADRSØ2 H	AL1	C		
SAPK DISP ADRSØ3 H	AN1	D		
SAPK DISP ADRSØ4 H	AL2	E		
SAPK DISP ADRSØ5 H	AP1	F		
SAPK DISP ADRSØ6 H	AK1	H		
SAPK DISP ADRSØ7 H	AP2	J		
SAPK DISP ADRSØ8 H	AK2	K		
SAPK DISP ADRSØ9 H	AR1	L		
SAPK DISP ADRS1Ø H	AH2	M		
SAPK DISP ADRS11 H	AR2	N		
SAPK DISP ADRS12 H	AE2	P		
SAPK DISP ADRS13 H	AS1	R		
SAPK DISP ADRS14 H	AE1	S		
SAPK DISP ADRS15 H	AS2	T		
SAPK DISP ADRS16 H	AF1	U		
SAPK DISP ADRS17 H	AU1	V		
	AD1	W		
UBCJ IND PAUSE H		X		
TMCF IND ADRS ERR H	FS1	Y		
UBCJ IND MASTER H		Z		
TMCF IND RUN H	AB2	AA		
		BB	BS1	UBCJ DISP ADRS SELØ H
		CC	BT2	UBCJ DISP ADRS SEL1 H
		DD	AF2	UBCJ PNL LOCK H
		EE	BS2	UBCJ CONT SW H
		FF	BV2	UBCJ SINGLE CYCLE SW H
		HH		UBCJ LOAD ADRS SW H
SSRB SRØ MODE 1 H	BC1	JJ		
		KK		UBCJ START SW H
SAPA IND DATA H	BE2	LL		
		MM		UBCJ REG EXAM SW H
		NN		UBCJ EXAM SW H
+5VB		PP		
		RR		UBCJ REG DEP SW H
		SS	AB1	UBCJ DISP ADRS SEL2 H
		TT		UBCJ DEP SW H
		UU		
		VV	BU2	UBCJ HALT SW H

7008864

CONSOLE CABLE, INDICATORS SLOT 12

FIRST USED ON OPTION/MODEL	QTY.	DESCRIPTION	PART NO	ITEM NO
11/45		PARTS LIST		

UNLESS OTHERWISE SPECIFIED DIMENSION IN INCHES. TOLERANCES
DECIMALS: XXX ± .005, .XX ± .02, .X ± .1 — ANGLES: ± 0° 30'
REMOVE BURRS AND BREAK SHARP CORNERS SURFACE QUALITY ✓
MATERIAL —
FINISH —

DRN. — DATE —
CHKD — DATE 1-22-76
ENG. — DATE 1-22-76
PROJ ENG. — DATE 1-22-76
PROD — DATE 1-22-76

EQUIPMENT CORPORATION MAYNARD MASSACHUSETTS

TITLE: UNIBUS & CONSOLE CONTROL (UBCJ)

NEXT HIGHER ASSY. B-DD-KB11-Ø
SIZE D CODE DCS NUMBER M8119-Ø-1 REV. B
SCALE —
SHEET 10 OF 15 DIST.

REVISIONS — CHANGE NO — CHK

DEC FORM NO DEC 102-B

104

This drawing and specifications, herein, are the property of Digital Equipment Corporation and should not be reproduced or copied or used in whole or in part as the basis for the manufacture or sale of items without written permission. ©1975 DIGITAL EQUIP. CORP.

WAT.2Ø
BRK.ØØ
} INTR PAUSE
RACB UBSD ØØ:Ø1=1

-(BR4 + BR5 + BR6 + BR7)

BR4 + BR5 + BR6 + BR7

SERVICE ALL EXISTING NPR'S

NPR + SACK + NPG

-(NPR + SACK + NPG)

T2 → UBCD SERVICE BR ← 1
DISABLE NPG'S

ASSERT BUS GRANT ON APPROPRIATE LEVEL AND CLEAR UBCD SERVICE BR F.F.

WAIT FOR BUS SACK FROM FROM DEVICE

-SACK

10μ SEC : NO SACK TIMEOUT → RESTART TIMING; CLEAR BUS GRANT IF NO SACK TIME OUT

BUS SACK

WAIT 75NS AND THEN CLEAR GRANT

WAIT FOR BUS INTR AND VECTOR OR BUS BBSY TO GO AWAY; SERVICE NPR'S WHEN -(SACK + GRANT)

-(SACK + BUSY)

BUS INTR

RESTART CLOCK AND DESCEW VECTOR

T1 → CLK VECTOR INTO BR → ENTER NEXT ROM STATE

T1 → BUST — CLOCK ROM OUTPUT BUFFER; RACC UMSC ØØ:Ø2 EQUAL 5+7

T2 → SEG DLY — SEGMENTATION OPTION PRESENT AND ENABLED: WAIT 90NS FOR ADDRESS RELOCATION; IF ABSENT OR DISABLED: NORMAL TIMING.

SEGMENTATION RELOCATION OR PROTECTION ERROR

T3 → FAST BUS DEVICES AND SOLID STATE MEMORY DECODE PHYSICAL ADRS. LINES

SERVICE ALL EXISTING NPR'S; TAKE UNIBUS CONTROL, ASSERT ADRS AND CONTROL LINES, START ADRS DESCEW

TMCE BUST OUT AT TS3 SETS UBCA GET BUS F.F. UBCA GET BUS (1) * -(NPR + NPG + BUS BSY + D SACK): UBCA CP BUSY ← 1

CHECK FOR PARITY ERRORS, ODD ADDRESS ERRORS AND STACK LIMIT ERRORS IF APPLICABLE.

NO ERRORS

ERROR DETECTED
SERVICE AT T3 OF PAUSE STATE

FAST BUS OR SOLID STATE MEM ADRS

BUS END

T1 → PAUSE — CLOCK ROM OUTPUT BUFFER; RACB UBSDØ1=1 LOAD BR IF DATO * RACA UBRK (MAY HAVE BEEN DONE IN PREVIOUS STATE

BEND — RACC UBCT ØØ:Ø2 EQUAL 7

PAUSE — RACB UBSDØ1=1 LOAD BR IF DATO *

PAUSE — RACB UBSDØ1 = 1

BEND — RACC UBCT ØØ:Ø2 EQUAL 7

T2 → RELINQUISH UNIBUS CONTROL; CLEAR UBCA CP BUSY F.F

TMCF FAST * TS2 = UBCR CLR UNI: UBCA GET BUS ← Ø UBCA CP BUSY ← Ø ABANDON UNIBUS OPERATION.

RELINQUISH UNIBUS CONTROL; CLEAR UBCA CP BUSY F.F

RESTART UNIBUS ADRS DESKEW FOR DATO * CLK BR FINISH DESKEW FOR ALL OTHERS * ASSERT MSYN UPON COMPLETION

RACA UBRK * (TMCE DATO BUS OP + TMCE BSCP2) : UBCB CLR DESKEW AT T2.

UBCA GET BUS → Ø; WAIT FOR SSYN + TIMEOUT

STOP TIMING GEN IN TS2 AND WAIT FOR UBCA SSYN RESTART

NO SSYN (UBCB TIMEOUT)

ABORT OPERATION ZAP ROM → 2ØØ AND TRAP TO CORRESPONDING VECTOR CLEAR UBCA GET BUS AND CP BUSY IF ASSERTED

TMCC ABORT * TS2: RACA ZAP

RELINQUISH UNIBUS CONTROL; CLEAR UBCA CP BUSY F.F IGNORE ERROR CHECKS

TMCE BEND CLR AT TS3: UBCA GET BUS → Ø UBCA CP BUSY ← Ø RACB UBSDØ1=Ø: INHIBIT ERRORS.

ENTER NEW ROM STATE

T3 → SEND CONTROL OK TO SOLID STATE MEM — TMCE PAUSES * T3 : UBCA CONTROL OK ← 1

RACB UBSDØØ:Ø1=3 BUS LONG PAUSE

T5 → STOP TIMING IF SOLID STATE MEMORY AND WAIT FOR DATA AND MEM SYNC. — BIPOLAR MEMORY STOPS TIMING ONLY IF IT IS BUSY WHEN BUST OUT IS ISSUED.

STOP TIMING GEN IN TS5 FINISH 75NS DATA DESKEW TAKE DATA AT T6 VIA UBCB BUS LOAD IF DATI, CLEAR MSYN, DO 75NS ADDRESS DESKEW AND RESTART TIMING. CLEAR UBCA CP BUSY AT T1

UBCB BUS LOAD (1) * RACA UBRK : UBCB CLK BR (ALSO DAPA)

DESKEW DATA FROM T3 TO NEXT T1

RACB UBSDØØ:Ø1=2 BUS PAUSE

T1 → TAKE DATA IF DATI CLK BR; CLK IR IF FET.1; DROP CONTROL OK — TIGC T1 * RACA UBRK: UBCB CLK BR (ALSO DAPA) TIGC T1 : UBCA CONTROL OK ← Ø

TAKE DATA IF DATI CLK IR AND BR DROP MSYN AND START 75NS ADRS DESCEW — TIGC T1 * RACA UBRK: UBCB CLK BR (ALSO DAPA)

T4 → RELINQUISH UNIBUS CONNTRC.. CLEAR UBCA CP BUSY F.F. DROP ADRS AND CONTROL LINES — TIGD T94 * -(TMCE PAUSES + UBCB BUST + UBCC DATIP): UBCA CP ← Ø

* THIS OCCURS IN SHR16 ØØ AND EXC. ØØ FOR ODD BYTE OPERATIONS.

NOTE:
IF PROCESSOR HAS M8104 REV C AND KB11-A ECO # 13 USE PRINT UBCN FOR UNIBUS TIMING.

BUS CYCLE AND INTERRUPT FLOW — SLOT 12

FIRST USED ON OPTION/MODEL	QTY	DESCRIPTION	PART NO	ITEM NO.
11/45		PARTS LIST		

UNLESS OTHERWISE SPECIFIED DIMENSION IN INCHES TOLERANCES
DECIMALS: XXX = .005, XX = .02, X = .1 — ANGLES: ±0° 30'
REMOVE BURRS AND BREAK SHARP CORNERS BURFACE QUALITY ✓
MATERIAL
FINISH

DRAN — DATE
CHK'D — DATE
ENG — DATE 11-22-76
PROJ ENG. — DATE
PROG — DATE 12-1-76

NEXT HIGHER ASSY.
SCALE
SHEET 11 OF 15

digital EQUIPMENT CORPORATION MAYNARD MASSACHUSETTS

TITLE: UNIBUS & CONSOLE CONTROL (UBCK)

SIZE D | CODE DCS | NUMBER M8119-0-1 | REV B | DIST

REVISIONS: REV | CHANGE NO | CHK

DRAWING 40-532 19840 — DEC FORM NO DRD 103-B

SOFTWARE DCS M8119-0-1 REV B

105

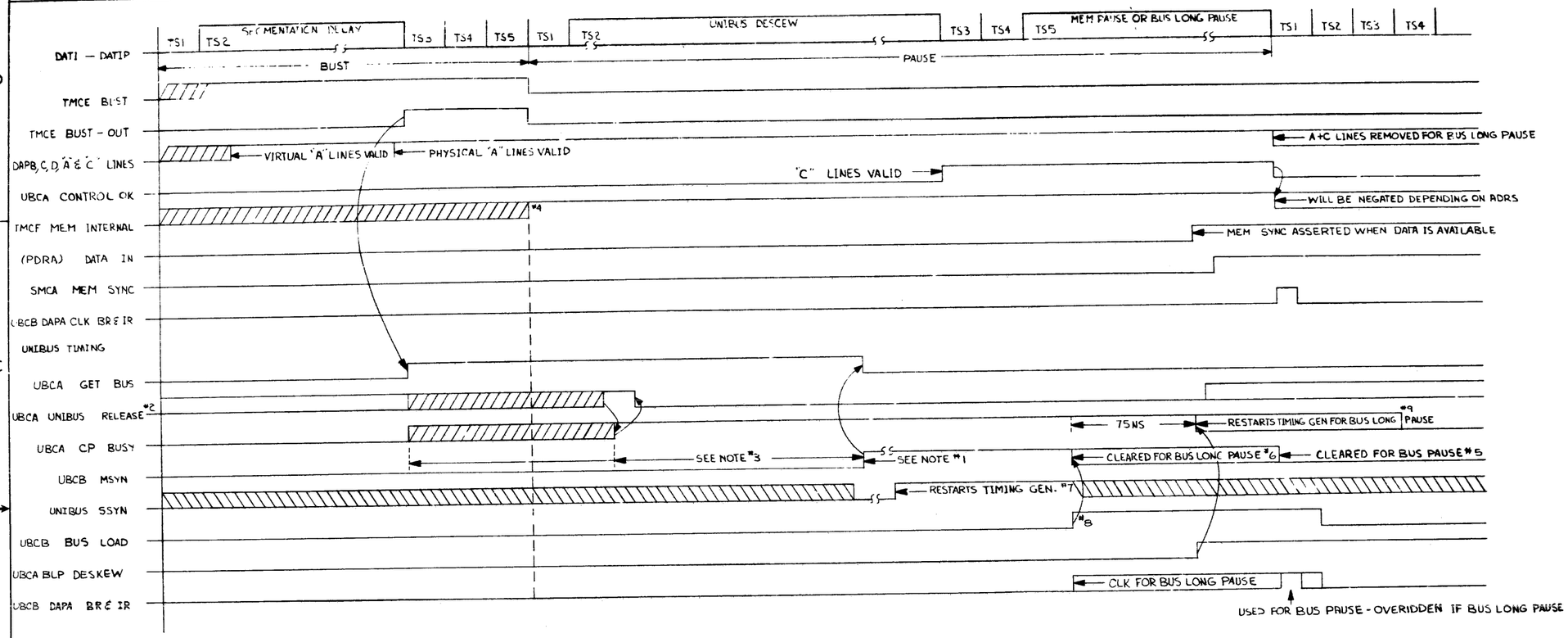

1. MSYN IS NOT SET IF ODD ADRS, SEGMENTATION, PARITY OR STACK LIMIT ERROR HAS OCCURED. ERROR CONDITION RESTARTS TIMING GENERATOR AND ROM IS FORCED TO ZAP-ØØ

2. UNIBUS RELEASE = -(NPG + NPR + DSACK + BBSY)

3. MSYN IS SET 150 NS AFTER CP BUSY IS SET OR WHENEVER SSYN IS NOT PRESENT AFTER THE 150NS DESCEW

4. IF ADRS IS INTERNAL OR SOLID STATE MEMORY UNIBUS CNTL LOGIC IS CLEARED, DESCEW STOPPED, MSYN NOT ASSERTED.

5. BUS PAUSE - ADRS WILL NOT BE CHANGED IMMEDIATELY UPON EXITING PAUSE STATE

6. BUS LONG PAUSE - 75NS ADRS DESCEW AFTER NEGATION OF MSYN MUST BE DONE BEFORE TIMING GEN. RESTARTS AT T5 OF PAUSE CYCLE BECAUSE "A" & C LINES WILL CHANGE UPON EXITING PAUSE STATE

7. IF NON-EXISTANT MEMORY, TIMEOUT RESTARTS CLOCK.

8. BUS LOAD IS SET ONE CLOCK AFTER T5 TO ALLOW COMPLETION OF WRITE TO SCRATCHPAD FOR PREVIOUS CYCLE BEFOR NEW IR & BR ARE LOADED

9. CLEARED 75NS AFTER MSYN → Ø: T4 FOR BUS PAUSE

NOTE:
IF PROCESSOR HAS M8104 REV "C" AND KB11-A ECO #13 USE PRINT UBCP FOR UNIBUS TIMING.

DATI - DATIP TIMING DIAGRAM

SLOT12

FIRST USED ON OPTION/MODEL	QTY.	DESCRIPTION	PART NO.	ITEM NO.
		PARTS LIST		

UNLESS OTHERWISE SPECIFIED DIMENSION IN INCHES TOLERANCES

DECIMALS	ANGLES
XXX - .005	±0° 30
XX - .02	
X - .1	

REMOVE BURRS AND BREAK SHARP CORNERS SURFACE QUALITY ✓

MATERIAL

FINISH

		DATE
DRN		
CHKD		
ENG	HEM	1-22-76
PROJ ENG	CM	1-22-76
PROD		DATE 1-22-76

NEXT HIGHER ASSY. B-DD-KB11-A

SCALE

SHEET 12 OF 13

digital EQUIPMENT CORPORATION MAYNARD MASSACHUSETTS

TITLE UNIBUS & CONSOLE CONTROL (UBCL)

SIZE	CODE	NUMBER	REV.
D	CS	M8119-Ø-1	B

DIST

REVISIONS: REV | CHANGE NO | CHK

BRUNING 40 522 15840

DEC FORM NO DRD 102-B

104

This drawing and specifications, herein, are the property of Digital Equipment Corporation and shall not be reproduced or copied or used in whole or in part as the basis for the manufacture or sale of items without written permission ©1975 DIGITAL EQUIP CORP.

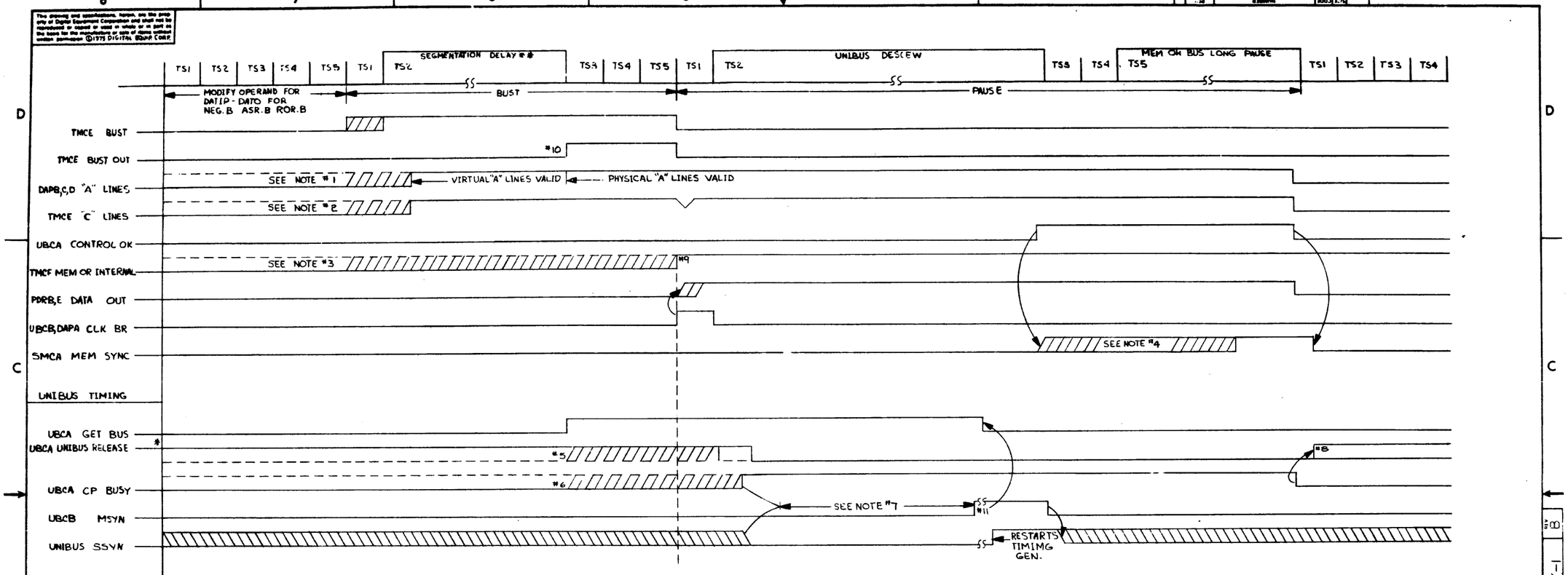

NOTES:

* UNIBUS RELEASE = -(NPR+NPG+BBSY+SACK)

** TIMING GEN: PROVIDES DELAY EQUIVCLENT TO 3 TIME STATES FOR RELOCATION OF ADDRESSES IF SEGMENTATION IS PRESENT AND ENABLED

1. ADDRESS WILL NOT BE CHANGING IF DATO IS PRECEEDED BY DATIP (DOTIED LINE SHOWS DATIP)
2. CONTROL LINES WILL SHOW DATIP OR ELSE ARE INVALID UNTIL CONTROL OK
3. MEM OR INTERNAL WILL BE TRUE UPON ENTERING DATO IF ADDRESS WAS SEMI CONDUCTOR MEMORY OR INTERNAL FROM PREVIOUS DATIP
4. MEM SYNC IS ASSERTED BY SEMI CONDUCTOR MEMORY AS SOON AS DATA IS TAKEN-IF DATA IS TAKEN AND MEM SYNC ASSERTED PRIOR TO T5 OF THE PAUSE CYCLE TIMING GENERATOR IS NOT STOPPED IN T5
5. UNIBUS RELEASE WILL NOT BE TRUE IF PREVIOUS OPERATION WAS A DATIP TO A UNIBUS ADDRESS.
6. CP BUSY WILL BE ASSERTED UPON ENTRY INTO DATO IF PREVIOUS OPERATION WAS A DATIP TO A UNIBUS ADDRESS
7. DESKEW FOR A C D LINES IS 150NS STARTING WHEN CP BUSY IS SET AND SSYN FROM THE PREVIOUS BUS OPERATION IS NEGATED.
8. UNIBUS RELEASE BECOMES TRUE IF NO NPR DEVICE HAS BEEN GIVEN CONTROL OR IS REQUESTING PRIOR TO CP BSY GETING CLEARED
9. IF ADDRESS IS SEMI CONDUCTOR MEMORY OR INTERNAL, UNIBUS LOGIC IS CLEARED DESKEW IS STOPPED AND MSYN IS NOT ASSERTED.
10. BUST OUT IS INHIBITED IN IRD.00 FOR CONDITIONAL BUST (MSC=5) IF EIN*SMI23+BR INST*BRQ TRUE. DMI23*=-(EIN*SMEI+BR INSTR)
11. MSYN IS NOT SET IF AN ODD ADRS, STACK LIMIT RED SEGMENTATION OR PARITY ERROR HAS OCCURED

NOTE:
IF PROCESSOR HAS M8104 REV 2 AND KB11-A ECO #13, USE PRINT UBCP FOR UNIBUS TIMING.

NOTE:
1. ALL SIGNALS ARE SHOWN TRUE WHEN HIGH

DATO TIMING DIAGRAM — SLOT 12

FIRST USED ON OPTION/MODEL	QTY	DESCRIPTION	PART NO.	ITEM NO.
11/45		PARTS LIST		

UNLESS OTHERWISE SPECIFIED DIMENSION IN INCHES. TOLERANCES
DECIMALS: .XXX ± .005, .XX ± .02, .X ± .1 — ANGLES: ±0° 30'
REMOVE BURRS AND BREAK SHARP CORNERS SURFACE QUALITY ✓
MATERIAL
FINISH

DRWN		DATE 1-22-76
CHK'D		DATE 1-22-76
ENG.	MCM	DATE 1-22-76
PROJ ENG	MCM	DATE 1-22-76
MGR		DATE 2FEB76

NEXT HIGHER ASSY.
SCALE
SHEET 13 OF 15

Digital EQUIPMENT CORPORATION MAYNARD MASSACHUSETTS

TITLE: UNIBUS & CONSOLE CONTROL (UBCM)

SIZE	CODE	NUMBER	REV.
D	CS	M8119-0-1	B

DIST.

REVISIONS	REV.	CHANGE NO	CHK

DRAWING 40-522 15660
DEC-11-OPAM-NO
ORD 102-B

This drawing and specifications, herein, are the property of Digital Equipment Corporation and shall not be reproduced or copied or used in whole or in part as the basis for the manufacture or sale of items without written permission. © '75 DIGITAL EQUIP CORP

W.AT.2Ø
BRK.ØØ
} INTR PAUSE
RACB UBSD ØØ:Ø1=1

-(BR4 + BR5 + BR6 + BR7)

BR4 + BR5 + BR6 + BR7

SERVICE ALL EXISTING NPR'S

NPR + SACK + NPG

-(NPR + SACK + NPG)

T2 → UBCD SERVICE BR ←1
DISABLE NPGS

ASSERT BUS GRANT ON APPROPRIATE LEVEL AND CLEAR UBCD SERVICE BR F.F.

WAIT FOR BUS SACK FROM FROM DEVICE

-SACK

10μ SEC: NO SACK TIME OUT

BUS SACK

WAIT 75NS AND THEN CLEAR GRANT

WAIT FOR BUS INTR AND VECTOR OR BUS BSSY TO GO AWAY; SERVICE NPR'S WHEN -(SACK + GRANT)

-(SACK + BUSY)

BUS INTR

RESTART CLOCK AND DESCEW VECTOR

RESTART TIMING; CLEAR BUS GRANT IF NO SACK TIME OUT

T1 → CLK VECTOR INTO BR

ENTER NEXT ROM STATE

T1 → BUST — CLOCK ROM OUTPUT BUFFER; RACC UMSC ØØ:Ø2 EQUAL 5+7

T2 → SEG.DLY — SEGMENTATION OPTION PRESENT AND ENABLED: WAIT 90NS FOR ADDRESS RELOCATION; IF ABSENT OR DISABLED: NORMAL TIMING.

SEGMENTATION RELOCATION OR PROTECTION ERROR

T3 → FAST BUS DEVICES AND SOLID STATE MEORY DECODE PHYSICAL ADRS. LINES

SERVICE ALL EXISTING NPR'S; TAKE UNIBUS CONTROL, ASSERT ADRS AND CONTROL LINES, START ADRS DESCEW

TMCE BUST OUT AT TS3 SETS UBCA GET BUS F.F. UBCA GET BUS (1) * -(NPR +NPG + BUS BSSY+D SACK): UBCA CP BUSY ←1

CHECK FOR PARITY ERRORS ODD ADDRESS ERRORS AND STACK LIMIT ERRORS IF APPLICABLE.

NO ERRORS

ERROR DETECTED SERVICE AT T3 OF PAUSE STATE

FAST BUS OR SOLID STATE MEM ADRS

BUS END

T1 → PAUSE — CLOCK ROM OUTPUT BUFFER; RACB UBSDØ1=1 LOAD BR IF DATO * RACA UBRK (MAY HAVE BEEN DONE IN PREVIOUS STATE

T2 → RELINQUISH UNIBUS CONTROL: CLEAR UBCA CP BUSY F.F

TMCF FAST * TS2 = UBCB CLR UNI' UBCA GET BUS ←Ø UBCA CP BUSY ←Ø ABANDON UNIBUS OPERATION.

T3 → SEND CONTROL OK TO SOLID STATE MEM — TMCE PAUSES * T3: UBCA CONTROL OK ←1

T5 → STOP TIMING IF SOLID STATE MEMORY AND WAIT FOR DATA AND MEM SYNC. — BIPOLAR MEMORY STOPS TIMING ONLY IF IT IS BUSY WHEN BUST OUT IS ISSUED.

T1 → TAKE DATA IF DATI CLK BR: CLK IR IF FET.1; DROP CONTROL OK — TIGC T1* RACA UBRK: UBCB CLK BR(ALSO DAPA) TIGC T1: UBCA CONTROL OK ←Ø

BEND — RACC UBCT ØØ:Ø2 EQUAL 7

RELINQUISH UNIBUS CONTROL: CLEAR UBCA CP BUSY F.F.

PAUSE — RACB UBSDØ1=1 LOAD BR IF DATO *

RESTART UNIBUS ADRS DESKEW FOR DATO * CLK BR FINISH DESKEW FOR ALL OTHERS * ASSERT MSYN UPON COMPLETION — RACA UBRK * (TMCE DATO BUS OP + TMCE BSCP2): UBCB CLR DESKEW AT T2.

UBCA GET BUS ←Ø; WAIT FOR SSYN + TIMEOUT — STOP TIMING GEN IN TS2 AND WAIT FOR UBCA SSYN RESTART

NO SSYN (UBCB TIMEOUT)

ABORT OPERATION ZAP ROM →2ØØ AND TRAP TO CORESPONDING VECTOR CLEAR UBCA GET BUS AND CP BUSY IF ASSERTED

TMCC ABORT * TS2: RACA ZAP

RACB UBSD ØØ:Ø1=3

BUS LONG PAUSE

DESKEW DATA FROM SSYN TO T3 VIA SYNCRONIZER. TAKE DATA AT T3 TO BUFFER. DESKEW ADDRESS & CONTROL T3 TO T1. DROP MSYN T3.

MOVE DATA FROM BUFFER TO BR IF DATI AT T1. HOLD ADDRESS AND CONTROL TO T4 IF BUS PAUSE — TIGC T1 * RACA UBRK: UBCB CLK BR (ALSO DAPA)

TIGD T5 * -(TMCE PAUSES + UBCB BUST + UBCC DATIP): UBCA CP ← Ø

PAUSE — RACB UBSDØ1 = 1

BEND — RACC UBCT ØØ:Ø2 EQUAL 7

RELINQUISH UNIBUS CONTROL; CLEAR UBCA CP BUSY F.F IGNORE ERROR CHECKS

TMCE BEND CLR AT TS3: UBCA GET BUS ←Ø UBCA CP BUSY ←Ø RACB UBSDØ1=Ø: INHIBIT ERRORS.

ENTER NEW ROM STATE

* THIS OCCURS IN SHR1Ø AND EXC. ØØ FOR ODD BYTE OPERATIONS.

BUS CYCLE AND INTERRUPT FLOW — SLOT 12

FIRST USED ON OPTION/MODEL	QTY.	DESCRIPTION	PART NO.	ITEM NO.
11/45		PARTS LIST		

UNLESS OTHERWISE SPECIFIED DIMENSION IN INCHES TOLERANCES
DECIMALS: XXX = .005, XX = .02, X = 1 — ANGLES: ±Ø° 3Ø'
REMOVE BURRS AND BREAK SHARP CORNERS SURFACE QUALITY ✓
MATERIAL
FINISH

DRAWN — DATE
CHK'D — DATE
ENG — DATE
PROJ ENG — DATE
PROG — DATE FEB 76

EQUIPMENT CORPORATION — MAYNARD MASSACHUSETTS

TITLE: UNIBUS & CONSOLE CONTROL (UBCN)

NEXT HIGHER ASSY.

SIZE D | CODE CS | NUMBER M8119-Ø-1 | REV. B

SCALE — SHEET 14 OF 15 — DIST

REVISIONS: REV | CHANGE NO | CHK

BRUNING 40 522 15840
DEC FORM NO DRD 103-B

M8119-0-1

108

THIS DRAWING AND SPECIFICATIONS HEREIN ARE THE PROPERTY OF DIGITAL EQUIPMENT CORPORATION AND SHALL NOT BE REPRODUCED OR COPIED OR USED IN WHOLE OR IN PART AS THE BASIS FOR THE MANUFACTURE OR SALE OF ITEMS WITHOUT WRITTEN PERMISSION.
COPYRIGHT © 1979 DIGITAL EQUIPMENT CORPORATION

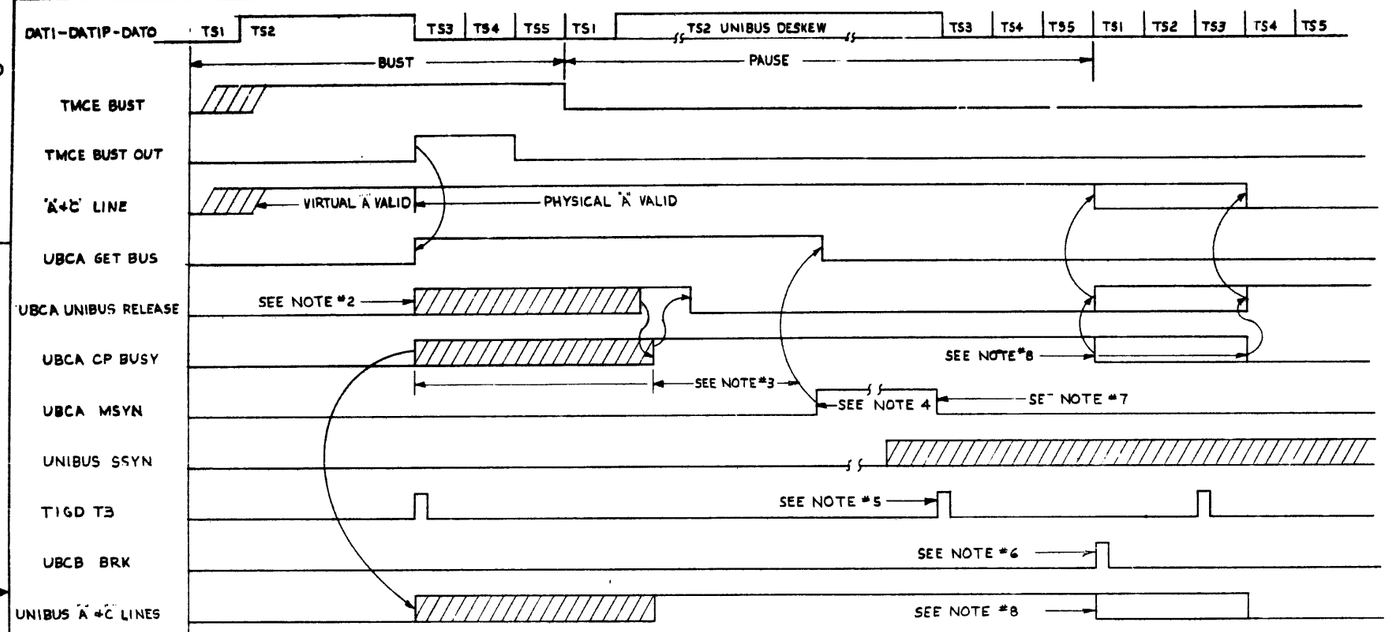

NOTES:

*1 MSYN IS NOT SET IF ODD ADDRESS, KT11C, PARITY OR STACK LIMIT HAS OCCURED. ERROR CONDITION RESTARTS TIMING GEN. AND ROM IS FORCED TO ZAP. ∞

*2 UNIBUS RELEASE = -(NPG + NPR + SACK + B BUSY)

*3 MSYN IS SET 150 NS AFTER CP BUSY OR WHENEVER SSYN IS NOT PRESENT AFTER 150 NS DESKEW.

*4 IF ADRS IS INTERNAL OR SOLID STATE MEMORY, UNIBUS CONTROL LOGIC IS CLEARED, DESKEW STOPPED, MSYN NOT ASSERTED.

*5 T3 STROBES UNIBUS DATA TO BUS BUFFER REGISTER EVERY T3. FOR DATI-DATIP THE BR CLOCK IS NEXT T1

*6 BRK IS DEPENDENT ON ROM TO LOAD BUS TO BR.

*7 75 NS DESKEW FOR MSYN IS OBTAINED BY THE FACT THAT SSYN MUST GO THROUGH 2 RANKS OF SYNCRONIZATION

*8 FOR BUS LONG PAUSE ADDRESS + CONTROL IS DESKEWED FROM T3 TO T1. FOR BUS PAUSE THEY ARE HELD TO TS4 OF THE NEXT ROM CYCLE.

SLOT 12

FIRST USED ON OPTION/MODEL	QTY.	DESCRIPTION	PART NO.	ITEM NO.
11/45		PARTS LIST		

UNLESS OTHERWISE SPECIFIED DIMENSION IN INCHES
TOLERANCES
DECIMALS .xxx = .005 .xx = .02 .x = .1
ANGLES ±0° 30'
REMOVE BURRS AND BREAK SHARP CORNERS SURFACE QUALITY ∇

DRN. [signature] DATE
CHK'D [signature] DATE 1-22-76
ENG [signature] DATE 1-22-76
PROJ ENG [signature] DATE 1-22-76
PROD. [signature] DATE 2FEB76

MATERIAL
FINISH
NEXT HIGHER ASSY.
SCALE
SHEET 15 OF 5

digital EQUIPMENT CORPORATION MAYNARD MASSACHUSETTS

TITLE
UNIBUS & CONSOLE CONTROL (UBCP)

SIZE	CODE	NUMBER	REV.
D	CS	M8119-Ø-1	B

DIST.

REVISIONS: REV | CHANGE NO | CHK

DEC FORM NO DRD 102-C

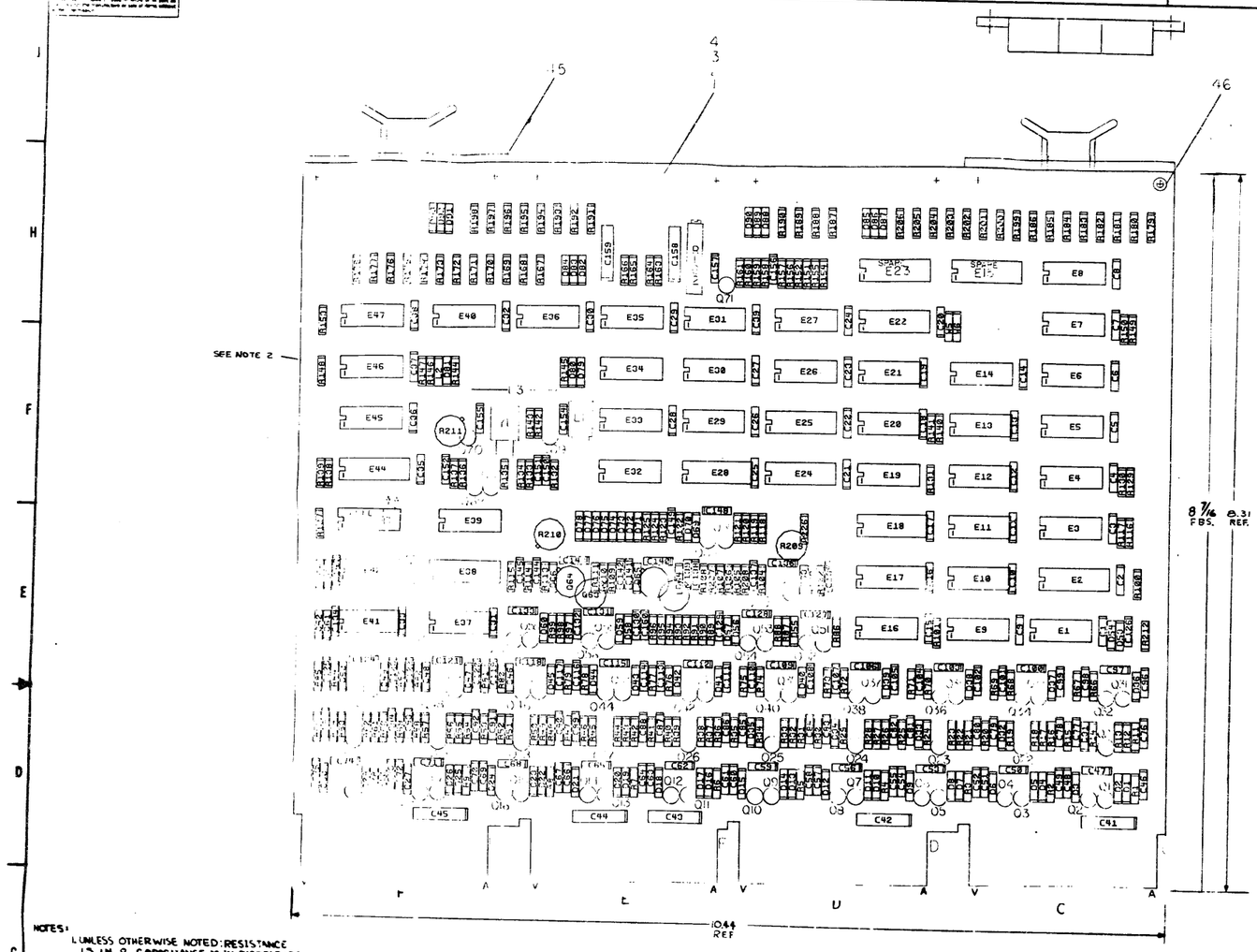

NOTES:
1. UNLESS OTHERWISE NOTED: RESISTANCE IS IN Ω, CAPACITANCE IS IN PICOFARADS. CAPS WITHOUT VALUE NOTED ARE .22 MFD 50V. DIODES ARE TYPE FD777 & ALL NPN TRANSISTORS ARE DEC 3009 B,C PNP TRANSISTORS ARE DEC 4258.
2. BOND LI TO ETCHED BOARD

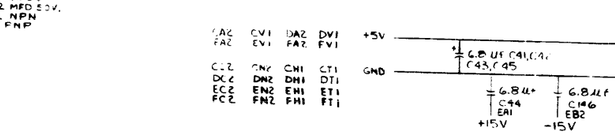

QTY	REF DESIGNATION	DESCRIPTION	PART NO.	ITEM NO
2	R209, R210	POT. 2K 1/2 W	13-09150-07	51
1	R211	POT. 100 1/2 W	13-09150-05	50
1	R136	RES 120 1/4 W 5%	13-00047	49
1	R212	RES 33 1/4 W 5%	[illegible]	48
2	W8, W5	JUMPER INSULATED	9009185	47
8		EYELET #664-1	1006732	46
4		HANDLE FLIP CHIP MAGENTA	9009337-06	45
1	Y1	CRYSTAL 33.333 MHZ	18XYL-44-1	44
1	L2	INDUCTOR .47 MH NYTRONICS WEE WEE .047	16[illegible]-171	43
1	L1	MC XTOR .22 MH VARIABLE NYTRONICS WEE VL .22	16110.00	42
1	L3	INDUCTOR RFCS 33 MH	1601759	41

PARTS LIST

QTY	REF DESIGNATION	DESCRIPTION	PART NO.	ITEM NO
35	Q1, 2, 5, 7, 8, 17, 19, 20, 21, 23 THRU 25, 31 THRU 40, 51, 54, 56, 58, 59, 61, 63, 65, 66, 69, 70	TRANSISTOR DEC 4258	1505321	40
36	Q3, 4, 6, 9, 10, 12, 14, 16, 18, 22, 26 THRU 30, 41 THRU 50, 52, 53, 57, 60, 62, 64, 67, 68, 71, 153	TRANSISTOR DEC 3009 B	1505130	39
1	E35	IC DEC 7415 10	1910546	38
8	E2, E17, E18, E22, E24 E25, E28, E44	IC DEC 74S112	1910545	37
8	E5, E6, E19, E29, E33 E6, E26, E37	IC DEC 74S74	1910544	36
4	E11, E12, E13, E20	IC DEC 74S65	1910543	35
1	E32	IC DEC 74S64	1910542	34
6	E1, E9, E14, E16, E37, E41	IC DEC 74S40	1910541	33
2	E40, E46	IC DEC 74S20	1910539	32
3	E3, E34, E47	IC DEC 74S11	1910537	31
5	E4, E7, E21, E30, E45	IC DEC 74S04	1910534	30
4	E10, E31, E36, E42	IC DEC 74S00	1910532	29
1	R162	POT 1K 3/4W 10%	13099145-07	28
9	R117, R130, R151, R140, R147, R150, R151, R163, R166	RES 680 1/4W 5%	1301424	27
1	R142	RES. 750 1/4W 5%	1301401	26
13	R66, R68, R70, R12, R14, R76, R79, R80, R82, R84, R118, R124, R120	RES. 1.2K 1/4W 5%	1301320	25
26	R13, R15, R18, R20, R23, R25, R28, R30, R33, R35, R38, R41, R44, R47, R50, R53, R56, R59, R62, R65, R102, R104, R114, R115, R132, R158	RES. 10 1/4W 5%	1301317	24
5	R16, R17, R22, R27, R32	RES. 15K 1/4 5%	1300496	23
17	R5 THRU R10, R40, R46, R52, R58, R64, R67, R69, R71, R113, R175, R99, R113	RES. 4.7K 1/4 5%	1300447	22
12	R1 THRU R3, R77, R79, R81, R83, R85, R86, R103	RES. 3K 1/4 5%	1300432	21
6	R11, R16, R21, R26, R31, R143	RES 15K 1/4 5%	1300391	20
76	R36, R37, R42, R43, R48, R49, R54, R55, R60, R61, R81 THRU R96, R105 THRU R112, R122, R123, R124, R126, R104, R108, R109, R148, R153, R167 THRU R208	RES. 1K 1/4 5%	1300365	19
12	R4, R39, R141, R146, R149, R154, R155, R157, R160, R161, R164, R165	RES. 330 1/4W 5%	1300295	18
1	R145.	RES. 220 1/4W 5%	1300277	17
6	R100, R101, R131, R154, R156	RES. 150 1/4W 5%	1300250	16
11	R24, R29, R34, R39, R45, R51, R57, R63, R121	RES. 100 1/4W 5%	1300229	15
2	R133, R137	RES. 68 1/4W 5%	1300219	14
7	R87, R88, R97, R134, R135, R144, R98	RES. 47 1/4W 5%	1300202	13
52	D1, D2, D4, D6, D7, D9, D10, D12, D13, D15, D16, D18, D19, D21, D22, D24, D25, D27, D28, D30, D31, THRU D50, D53, D54, D57, D58, D61, D62, D64, D65, D67, D68, D69, D71	DIODE FD777	1103041	12
39	D2, D5, D8, D11, D14, D17, D20, D23, D26, D29, D32, D35, D38, D41, D44, D47, D48, D51, D52, D55, D56, D59, D60, D63, D66, D70, D72	DIODE D662	1100113	11
96	C2, C103, C105, C106, C107, C109, C111, C116, C120, C121, C123, C124, C126, C127 THRU C145, C147, C148, C149, C151, C152	AL .22 MF 6.3 V MIN NO.	1010274-1	10
8	C44, C45, C46, C158, C159	CAP 6.8 MF 35V 10% TANT	1005306	9
42	C1 THRU C39, C150 THRU C155, C156,	CAP .01 MF 100V 20% MISC	1001610	8
1	C154	CAP 100 PF 100V 5% DM	1000616	7
1	C157	CAP 47 PF 100V 5% DM	1000611	6
10	C40, C101, C104, C110, C113, C114, C117, C122, C125	CAP 33 PF 100V 5% DM	1000609	5
1		ETCHED CIRCUIT BOARD	9009199	4
REF		MODULE ECO HISTORY	0-IM-MB109-0-G	3
REF		ASSY/DRILL HOLE LAYOUT	0-IM-MB109-0-B	2
1		X-Y COORDINATE HOLE LOCATION	X-CO-MB109-0-C	1

PARTS LIST

QTY	REF DESIGNATION	DESCRIPTION	PART NO.	ITEM NO

ETCH BOARD REV. F

DEC 4258	NONE
DEC 3009 B	2N3646
DEC FD777	1103041
DEC 662	1N649

SEMICONDUCTOR CONVERSION CHART

[redacted] EQUIPMENT CORPORATION

TIMING GENERATOR

B-DD-MB11-0

0-IM-MB109-0-G

This drawing and specifications, herein, are the property of Digital Equipment Corporation and shall not be reproduced or copied or used in whole or in part as the basis for the manufacture or sale of items without written permission.

SIZE D CS M8109-0-1 REV. G

+3VE
+3VA
+3VC
+3VF
+3VM
+3VN
+3VD
+5V
+8V

TIGC TPBL
TIGA TI (I) L
SMCA MEM SYNC (B) L
TIGA MEM SYNC H
TIGA STOP TI L
TIGA TI MAT H
TIGA T2 MAT H
TIGA T3 MAT H
TIGA T4 MAT H
TIGA T5 MAT H
TIG TPH MAT H
PHKA STOP TI L
TIGA T4 (Ø) H
TIGA T5 (Ø) H
TMCF SEL MØB L
TIGA UBSDØØ H
TIGA UBSDØ1 H
TMCC ABORT H
TIGC TPB L
TIGA TI (I) L
TIGA ROM INITA L
TIGC TPB H
UBCA PAUSE H
TMCF FAST L
TIGA T4 (I) H
TIGA T5 SYNC (I) H
TIGA CONT H
TIGA ROM INIT B L
TIGB CONT L
TIGA TI (I) B L
TIGB ROM+ UFB (I) H
TIGC TPB H
T2 (Ø) H
TIGA CONT (I) L
TMCF FAST L
TIGA ROM40 H
UBCB EXT BUS H
RACB UBSDØØ H
TIGA UBSDØ1 L
TIGA T5 (Ø) H
TIGA T2 (Ø) H
TIGA T1A (Ø) H
TIGA UBSDØØ H
TIGA SNG CY (I) H
TIGA T1 (I) H
TIGA STOP TI L
UBCE ROM INIT H
TIGA ROM INITB L
TIGA ROM INITA L
TIGA TI SYNC (I) H
TIGA TI (I) L
PHKA STOP T3 L
TIGA SNGCY (I) H
TIGA T2A (I) H
TIGA CONT (I) L
RACB DIS BUST L
SSRB ENABLE T3 DLY H
TIGA STOP T3 L
TIGA-TI (I) H
TIGC TPB H
TIGA CONT H
TIGA TI (I) H
TIGC TPB H
TIGA S0 (I) H
TIGA S1 (I) H
TIGA S0 (I) H
TIGA S1 (I) H
TIGB SINGLE CY L
TIGC TPB H
TIGA CONT H
UBCA SSYN RESTART H
UBCA INTR RESTART H
RACB UBSDØ1 H
RACB UBSDØØ H
TIGA UBSDØ1 H
TIGA UBSDØØ H
CM1
RACB ROM40 BL
TIGA ROM 40 H

TIMING GENERATOR CONTROL — SLOT 15

FIRST USED ON OPTION/MODEL	QTY.	DESCRIPTION	PART NO.	ITEM NO.
11/45		PARTS LIST		

UNLESS OTHERWISE SPECIFIED DIMENSION IN INCHES TOLERANCES
DECIMALS: XXX ± .005, XX ± .02, X ± .1 — ANGLES: ± 0° 30'
REMOVE BURRS AND BREAK SHARP CORNERS SURFACE QUALITY ✓
MATERIAL —
FINISH —

	NAME	DATE
DRAW	[illegible]	9/25/71
CHK'D	[illegible]	11/24/71
ENG.	[illegible]	[illegible]
PROJ. ENG.	[illegible]	7/20/72
PROD.	[illegible]	[illegible]

NEXT HIGHER ASSY. B-DD-KB11-Ø
SCALE —
SHEET 2 OF 6

digital EQUIPMENT CORPORATION

TITLE: TIMING GENERATOR (TIGA)

SIZE D CODE CS NUMBER M8109-Ø-1 REV. G
DIST.

REVISIONS — REV. / CHANGE NO. / DATE

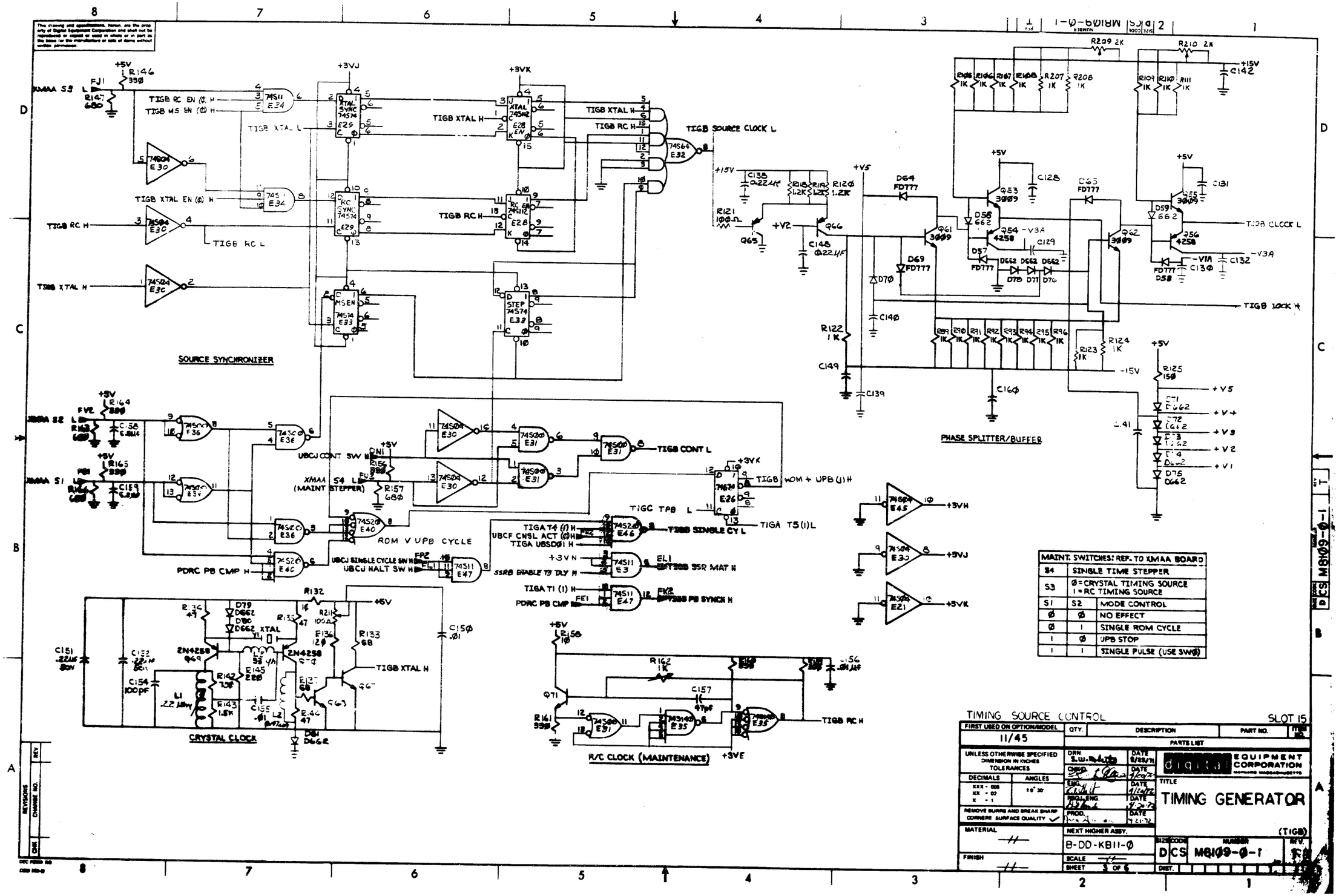
SOURCE SYNCHRONIZER
PHASE SPLITTER/BUFFER
CRYSTAL CLOCK
R/C CLOCK (MAINTENANCE)
TIGB SOURCE CLOCK L
TIGB CLOCK L
TIGB LOCK H
TIGB CONT L
TIGB XTAL H
TIGB RC H
TIGB XTAL L
TIGB RC L
TIGB XTAL EN (Ø) H
TIGB RC EN (Ø) H
TIGB MS EN (Ø) H
XMAA S3 L
XMAA S2 L
XMAA S1 L
XMAA S4 L (MAINT STEPPER)
UBCJ CONT SW H
UBCJ SINGLE CYCLE SW H
UBCJ HALT SW H
ROM V UPB CYCLE
PDRC PB CMP H
TIGC TPB L
TIGA T4 (1) H
UBCF CNSL ACT (Ø) H
TIGA UBSDØ1 H
TIGA T5 (1) L
TIGB SINGLE CY L
TIGB SSR MAT H
TIGB PB SYNCH H
TIGA T1 (1) H
TIGB ROM + UPB (1) H
TIGB RC H
TIGB XTAL H
TIGB CLOCK L
TIGB LOCK H
+5V
+3VJ
+3VK
+3VH
+3VE
+15V
-15V
+V5
+V4
+V3
+V2
+V1
-V3A
-V1A
MAINT. SWITCHES: REF. TO XMAA BOARD
S4 SINGLE TIME STEPPER
S3 Ø = CRYSTAL TIMING SOURCE
1 = RC TIMING SOURCE
S1 S2 MODE CONTROL
Ø Ø NO EFFECT
Ø 1 SINGLE ROM CYCLE
1 Ø UPB STOP
1 1 SINGLE PULSE (USE SWØ)
TIMING SOURCE CONTROL
SLOT 15
FIRST USED ON OPTION/MODEL
11/45
QTY.
DESCRIPTION
PART NO.
PARTS LIST
UNLESS OTHERWISE SPECIFIED DIMENSION IN INCHES TOLERANCES
DECIMALS
ANGLES
REMOVE BURRS AND BREAK SHARP CORNERS SURFACE QUALITY
MATERIAL
FINISH
NEXT HIGHER ASSY.
B-DD-KB11-Ø
SCALE
SHEET 3 OF 6
digital EQUIPMENT CORPORATION
TITLE
TIMING GENERATOR
(TIGB)
SIZE D
CODE CS
NUMBER M8109-Ø-1
REV.
DIST.
REVISIONS
CHANGE NO.
REV
CHK
D CS M8109-Ø-1

112

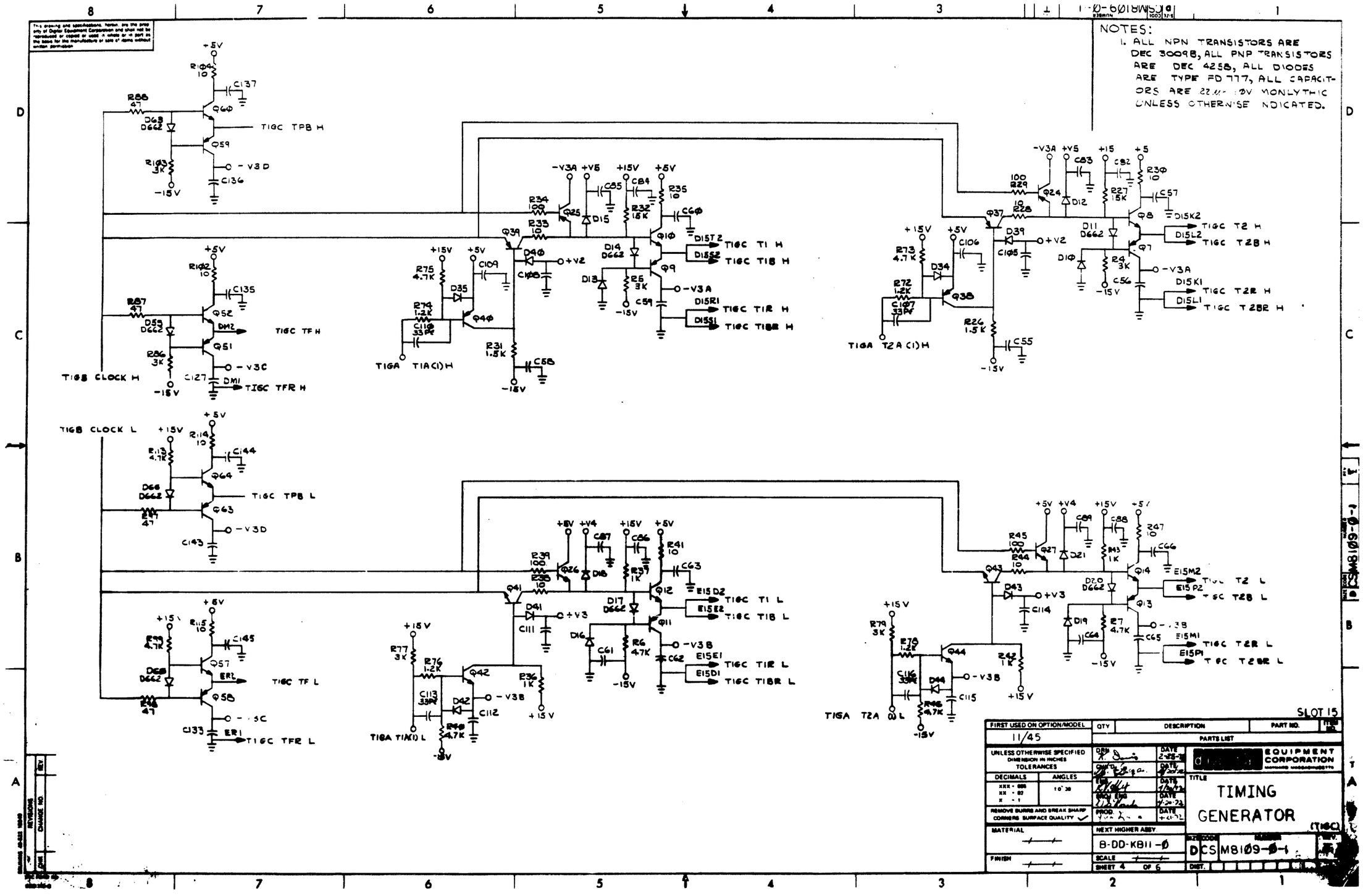
NOTES:
1. ALL NPN TRANSISTORS ARE DEC 3009B, ALL PNP TRANSISTORS ARE DEC 4258, ALL DIODES ARE TYPE FD 777, ALL CAPACITORS ARE 22µ-10V MONLYTHIC UNLESS OTHERWISE INDICATED.
TIGC TPB H
TIGC TF H
TIGB CLOCK H
TIGC TFR H
TIGB CLOCK L
TIGC TPB L
TIGC TF L
TIGC TFR L
TIGA T1A(1)H
TIGC T1 H
TIGC T1B H
TIGC T1R H
TIGC T1BR H
TIGA T2A (1)H
TIGC T2 H
TIGC T2B H
TIGC T2R H
TIGC T2BR H
TIGC T1 L
TIGC T1B L
TIGC T1R L
TIGC T1BR L
TIGA T1A(1) L
TIGA T2A (1) L
TIGC T2 L
TIGC T2B L
TIGC T2R L
TIGC T2BR L
SLOT 15
FIRST USED ON OPTION/MODEL
11/45
QTY
DESCRIPTION
PART NO.
ITEM NO.
PARTS LIST
UNLESS OTHERWISE SPECIFIED DIMENSION IN INCHES TOLERANCES
DECIMALS
ANGLES
REMOVE BURRS AND BREAK SHARP CORNERS SURFACE QUALITY
MATERIAL
FINISH
NEXT HIGHER ASSY
B-DD-KB11-0
SCALE
SHEET 4 OF 6
EQUIPMENT CORPORATION
TITLE
TIMING GENERATOR
(TIGC)
SIZE
CODE
NUMBER
REV.
D
CS
M8109-0-1
DIST.

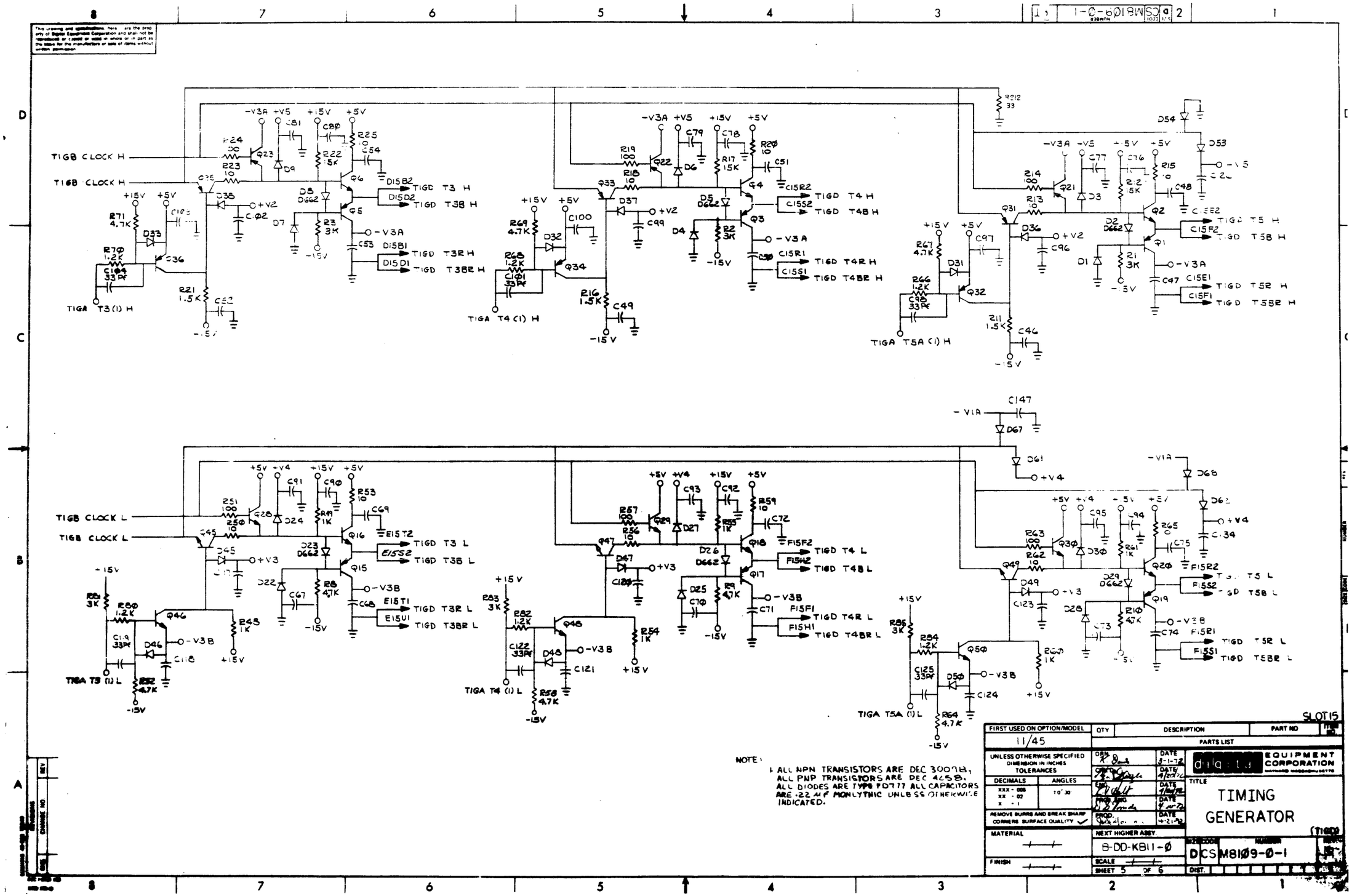

TIGB CLOCK H
TIGB CLOCK H
TIGA T3 (1) H
TIGD T3 H
TIGD T3B H
TIGD T3R H
TIGD T3BR H
TIGA T4 (1) H
TIGD T4 H
TIGD T4B H
TIGD T4R H
TIGD T4BR H
TIGA T5A (1) H
TIGD T5 H
TIGD T5B H
TIGD T5R H
TIGD T5BR H
TIGB CLOCK L
TIGB CLOCK L
TIGA T3 (1) L
TIGD T3 L
TIGD T3B L
TIGD T3R L
TIGD T3BR L
TIGA T4 (1) L
TIGD T4 L
TIGD T4B L
TIGD T4R L
TIGD T4BR L
TIGA T5A (1) L
TIGD T5 L
TIGD T5B L
TIGD T5R L
TIGD T5BR L
NOTE:
1. ALL NPN TRANSISTORS ARE DEC 3009B, ALL PNP TRANSISTORS ARE DEC 4258. ALL DIODES ARE TYPE FD777 ALL CAPACITORS ARE .22 µF MONLYTHIC UNLESS OTHERWISE INDICATED.
SLOT15
FIRST USED ON OPTION/MODEL
11/45
QTY
DESCRIPTION
PART NO
PARTS LIST
UNLESS OTHERWISE SPECIFIED DIMENSION IN INCHES
TOLERANCES
DECIMALS
ANGLES
REMOVE BURRS AND BREAK SHARP CORNERS SURFACE QUALITY
MATERIAL
FINISH
NEXT HIGHER ASSY.
B-DD-KB11-Ø
SCALE
SHEET 5 OF 6
digital EQUIPMENT CORPORATION
TITLE
TIMING GENERATOR
(TIGD)
SIZE
CODE
NUMBER
D
CS
M8109-Ø-1
DIST.

114

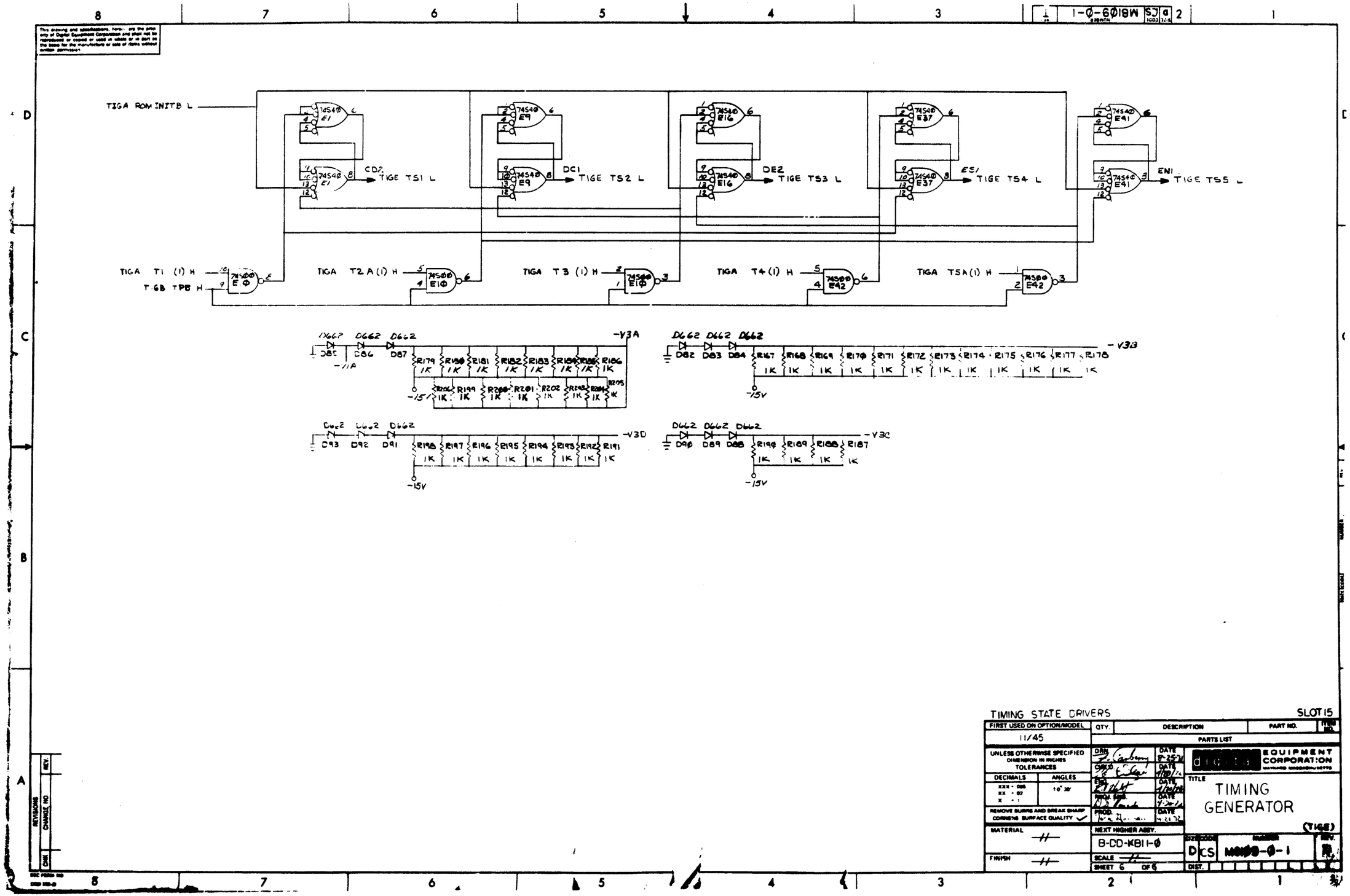

TIMING STATE DRIVERS

SLOT 15

FIRST USED ON OPTION/MODEL	QTY.	DESCRIPTION	PART NO.	ITEM NO.
11/45		PARTS LIST		

UNLESS OTHERWISE SPECIFIED DIMENSION IN INCHES TOLERANCES

DECIMALS	ANGLES
XXX - .005	±0° 30'
XX - .02	
X - .1	

REMOVE BURRS AND BREAK SHARP CORNERS SURFACE QUALITY ✓

MATERIAL —//—

FINISH —//—

DRN. DATE 8-25-71
CHK'D. DATE 4/20/72
ENG. DATE 4/20/72
PROJ. ENG. DATE 4-20-72
PROD. DATE 4-21-72

NEXT HIGHER ASSY. B-DD-KB11-0

SCALE —//—

SHEET 6 OF 6

digital EQUIPMENT CORPORATION MAYNARD MASSACHUSETTS

TITLE TIMING GENERATOR (TIGE)

SIZE D CODE CS NUMBER M8109-0-1 REV.

DIST.

REVISIONS: CHK | CHANGE NO | REV.

115

NOTES:
1. UNLESS OTHERWISE NOTED RESISTANCE IS IN Ω AND CAPACITANCE IS IN PICOFARADS. CAPS. WITHOUT VALUE NOTED ARE .01, MFD.

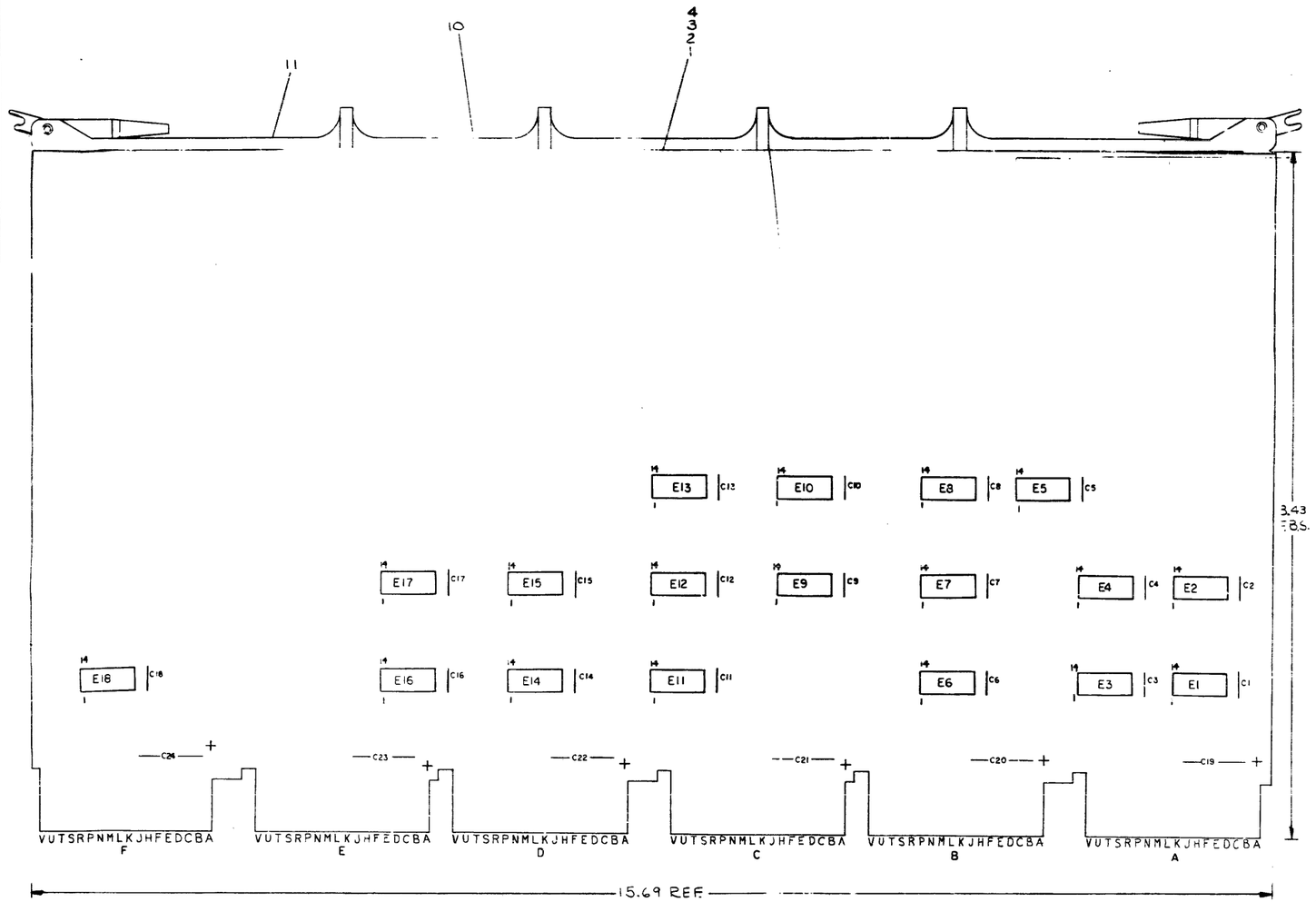

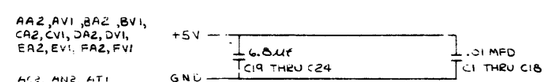

QTY	REF DESIGNATION	DESCRIPTION	PART NO.	ITEM NO.
1		HANDLE, MODULE	E-PS-210711-2	11
12		EYELET	9006732	10
6	E1, E2, E8, E10, E14, E17	IC DEC 74S11	1910537	9
5	E6, E7, E9, E11, E12	IC DEC 8881	1909705	8
7	E3, E4, E5, E13, E15, E16, E18	IC DEC 7404	1909686	7
18	C1 THRU C18	CAPACITOR .01µf, 100V, 20% DISC	1001610	6
6	C19 THRU C24	CAPACITOR 6.8µf, 35V, 10%	1005306	5
1		ETCHED CIRCUIT BOARD	5009950	4
REF		MODULE ECO HISTORY	B-MM-M8116-0-6	3
REF		ASSY/DRILLING HOLE LAYOUT	E-MM-M8116-0-5	2
REF		X-Y COORDINATE HOLE LOCATION	K-CO-M8116-0-4	1

PARTS LIST

ETCH BOARD REV A B C

[redacted] EQUIPMENT CORPORATION

SYSTEM ADDRESS BUFFERS

NEXT HIGHER ASSY B-DD-11/45-0

SHEET 2/1 SHEET 1 OF 3

CS M8116-Ø-1 SIZE 8

SEMICONDUCTOR CONVERSION CHART

DEC NO. | EIA NO. | DEC NO. | EIA NO.

IC TYPE | GND | +5V

IC PIN LOCATIONS | JUMPER LIST

116

This drawing and specifications, herein, are the property of Digital Equipment Corporation and shall not be reproduced or copied or used in whole or in part as the basis for the manufacture or sale of items without written permission.

+3V — 74S11 E2 — AF2 — DAPB BAMX ØØ H

UBCA CPBSY B H — 8881 E7 — BR1 — BUSA AØØ L

74Ø4 E4 — AE2 — (SAPK DISP ADR ØØ H)

DAPC BAMX Ø6 H — BT2

UBCA CPBSY B H — 8881 E7 — BJ1 — BUS:A AØ6 L

BP2 (SAPJ P106 H)

74Ø4 E5 — PN1 — (SAPK DISP ADR Ø4 H)

+3V — 74S11 E2 — AJ2 — DAPB BAMX Ø1 H

UBCA CPBSY B H — 8881 E7 — BP1 — BUSA AØ1 L

74Ø4 E4 — AS2 — (SAPK DISP ADR Ø1 H)

DAPC BAMX Ø7 H — BM2

UBCA CPBSY B H — 8881 E6 — BK2 — BUSA AØ7 L

BL2 (SAPJ PAØ7 H)

74Ø4 E5 — BB1 — (SAPK DISP ADR Ø7 H)

+3V — 74S11 E17 — EE1 — DAPD BAMX12 H

UBCA CPBSY B H — 8881 E12 — CP2 — BUSA A12 L

CK2 (SAPJ PA12 H)

74Ø4 E16 — EC1 — (SAPK DISP ADR12 H)

+3V — 74S11 E2 — AK2 — DAPB BAMX Ø2 H

UBCA CPBSY B H — 8881 E7 — BN1 — BUSA AØ2 L

74Ø4 E4 — AF1 — (SAPK DISP ADR Ø2 H)

DAPC BAMX Ø8 H — CB1

UBCA CPBSY B H — 8881 E9 — BH2 — BUSA AØ8 L

CA1 (SAPJ PAØ8 H)

74Ø4 E13 — FE1 — (SAPK DISP ADR Ø8 H)

+3V — 74S11 E14 — DM1 — DAPD BAMX13 H

UBCA CPBSY B H — 8881 E11 — CT2 — BUSA A13 L

CD2 (SAPJ PA13 H)

74Ø4 E16 — DL2 — (SAPK DISP ADR13 H)

+3V — 74S11 E1 — AH2 — DAPB BAMX Ø3 H

UBCA CPBSY B H — 8881 E6 — BM1 — BUSA AØ3 L

74Ø4 E3 — AK1 — (SAPK DISP ADR Ø3 H)

DAPC BAMX Ø9 H — EH2

UBCA CPBSY B H — 8881 E9 — CS1 — BUSA AØ9 L

BV2 (SAPJ PAØ9 H)

74Ø4 E5 — ED2 — (SAPK DISP ADR Ø9 H)

+2V — 74S11 E14 — DE1 — DAPD BAMX14 H

UBCA CPBSY B H — 8881 E11 — CU2 — BUSA A14 L

CJ1 (SAPJ PA14 H)

74Ø4 E16 — DL1 — (SAPK DISP ADR14 H)

+3V — 74S11 E1 — AE2 — DAPB BAMX Ø4 H

UBCA CPBSY B H — 8881 E6 — BL1 — BUSA AØ4 L

74Ø4 E3 — AE1 — (SAPK DISP ADR Ø4 H)

DAPC BAMX1Ø H — EE2

UBCA CPBSY B H — 8881 E9 — CM2 — BUSA A1Ø L

CH2 (SAPJ PA1Ø H)

74Ø4 E13 — ED1 — (SAPK DISP ADR1Ø H)

+3V — 74S11 E14 — DK1 — DAPD BAMX15 H

UBCA CPBSY B H — 8881 E11 — CJ1 — BUSA A15 L

CF2 (SAPJ PA15 H)

74Ø4 E16 — DK2 — (SAPK DISP ADR15 H)

+3V — 74S11 E1 — BA1 — DAPB BAMX Ø5 H

UBCA CPBSY B H — 8881 E6 — BK1 — BUSA AØ5 L

74Ø4 E3 — AJ1 — (SAPK DISP ADR Ø5 H)

APC BAMX11 H — EE1

UBCA CPBSY B H — 8881 E9 — CP1 — BUSA A11 L

CE2 (SAPJ PA11 H)

74Ø4 E13 — EF1 — (SAPK DISP ADR11 H)

74Ø4 E15 — +3V

74Ø4 E18 — +3V

74Ø4 E19

ADDRESS LINES Ø - 15 — SLOT 14

FIRST USED ON OPTION/MODEL	QTY.	DESCRIPTION	PART NO.	ITEM NO.
11/45		PARTS LIST		

UNLESS OTHERWISE SPECIFIED DIMENSION IN INCHES. TOLERANCES

DECIMALS	ANGLES
XXX = .005 XX = .02 X = .1	±0° 30'

REMOVE BURRS AND BREAK SHARP CORNERS SURFACE QUALITY ✓

MATERIAL —

FINISH —

	NAME	DATE
DRN	T. Bonn	11-19-71
CHK	R. Tuttle	3/2/72
ENGR	R.C. Gray	3/3/72
PROJ ENG.	R.C. Gray	3/12/72
PROG.	D. Shuster	3/16/72

EQUIPMENT CORPORATION

TITLE: SYSTEM ADDRESS BUFFERS (SJBA)

NEXT HIGHER ASSY. B-DD-11/45-Ø

SIZE D | CODE CS | NUMBER M8116-Ø-1 | REV. B

SCALE — SHEET 2 OF 3 — DIST.

REVISIONS	REV.	CHANGE NO	CHK

DRAWING 42-523 19560 — DEC FORM NO DRD 103-B

The drawing and specifications, herein, are the property of Digital Equipment Corporation and shall not be reproduced or copied or used in whole or in part as the basis for the manufacture or sale of items without written permission.

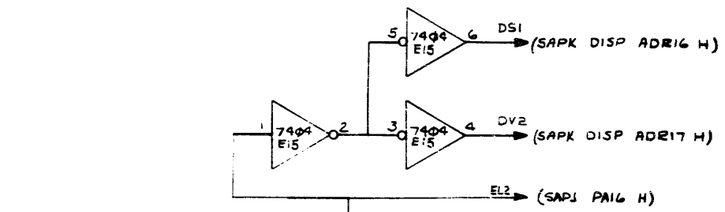

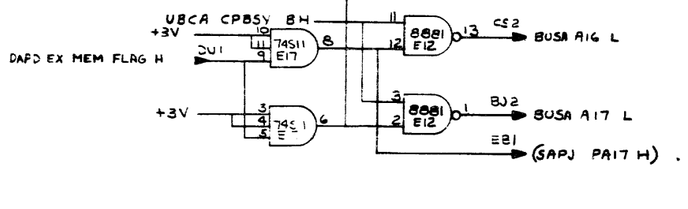

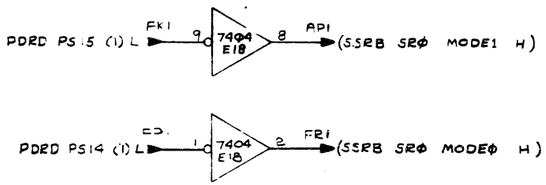

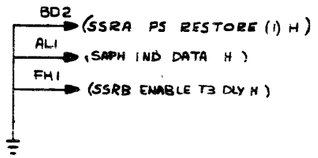

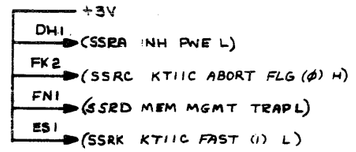

MISC. SIGNALS AND ADRS. LINES 16 & 17 SLOT 14

FIRST USED ON OPTION/MODEL	QTY.	DESCRIPTION	PART NO.	ITEM NO.
11/45		PARTS LIST		

UNLESS OTHERWISE SPECIFIED DIMENSION IN INCHES TOLERANCES
DECIMALS: XXX ± 005, .XX ± 02, X ± 1 — ANGLES: ± 0° 30'
REMOVE BURRS AND BREAK SHARP CORNERS SURFACE QUALITY ✓
MATERIAL —
FINISH —

DRN. K. Dino	DATE 11-18-71	digital EQUIPMENT CORPORATION MAYNARD MASSACHUSETTS
CHK'D [illegible]	DATE 3/2/72	
ENG. K.C. Chen	DATE 3/6/72	
PROD ENG'D K.C. Chen	DATE 3/2/72	
PROD. T. Hinch	DATE 3/15/72	

TITLE: SYSTEM ADDRESS BUFFERS (SJBB)
NEXT HIGHER ASSY. B-DD-11/45-0
SIZE D | CODE DCS | NUMBER M8116-Ø-1 | REV B
SCALE —
SHEET 3 OF 3 | DIST.

REVISIONS: REV | CHANGE NO | CHK

DEC 1-9SM-RD
DSD 1SS-0

PART CODE DCSM8116-Ø-1 REV B

"THIS DRAWING AND SPECIFICATIONS, HEREIN, ARE THE PROPERTY OF DIGITAL EQUIPMENT CORPORATION AND SHALL NOT BE REPRODUCED OR COPIED OR USED IN WHOLE OR IN PART AS THE BASIS FOR THE MANUFACTURE OR SALE OF ITEMS WITHOUT WRITTEN PERMISSION.
COPYRIGHT © 1975 DIGITAL EQUIPMENT CORPORATION"

NOTES:

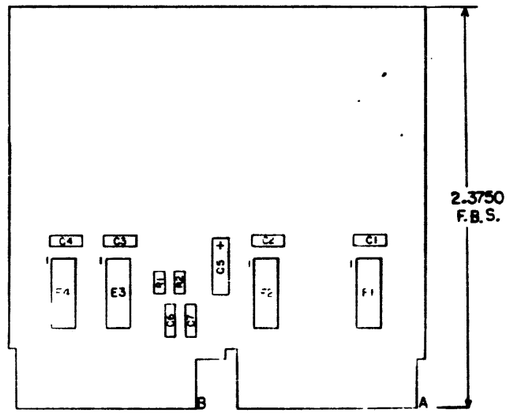

QTY	REF. DESIGNATION	DESCRIPTION	PART NO.	ITEM NO.
REF		X-Y COORDINATE HOLE LOCATION	K-CO-M930-0-4	1
REF		ASSY/DRILLING HOLE LAYOUT	D-AH-M930-0-5	2
REF		MODULE ECO HISTORY	B-MH-M930-0-6	3
1		ETCHED CIRCUIT BOARD	5008696	4
4	C1 THRU C4	CAP .22 µF 50V CER	1010274-01	5
2	C6, C7	CAP 1000pF 250V 20% DISC	1000043	6
1	C5	CAP 39µF 10V 10% TANT	1000073	7
2	R1, R2	RES 383Ω 1/4W 1%	1305125	8
2	E1, E4	28 RES DIVIDER NETWORK	1312628-00	9
2	E2, E3	25 RES DIVIDER NETWORK	1312628-01	10

PARTS LIST

FIRST USED ON OPTION MODEL: M930

ETCH BOARD REV. E-P3

IC TYPE	GND	+5V

GND AND 5V ARE USUALLY PIN 7 AND 14 RESPECTIVELY EXCEPTIONS ARE STATED ABOVE

IC PIN LOCATIONS

DEC NO.	EIA NO.	DEC NO.	EIA NO.

SEMICONDUCTOR CONVERSION CHART

K. SARGENT 10-3-75
ORIGINATED 7-11-75
CHK. CHANGE NO. REV. E
REVISIONS

DRN. J. CARTER DATE 7-9-75
CHK'D. DATE 7-16-75
ENG. DATE 10-3-75
PROJ. DATE 10-3-75
PROD. DATE

NEXT HIGHER ASSY

SCALE —
SHEET 1 OF 2

digital

TITLE BUS TERMINATOR

SIZE D CODE CS NUMBER M930-0-1 REV. E
DIST.

D CS M930-0-1 E

119

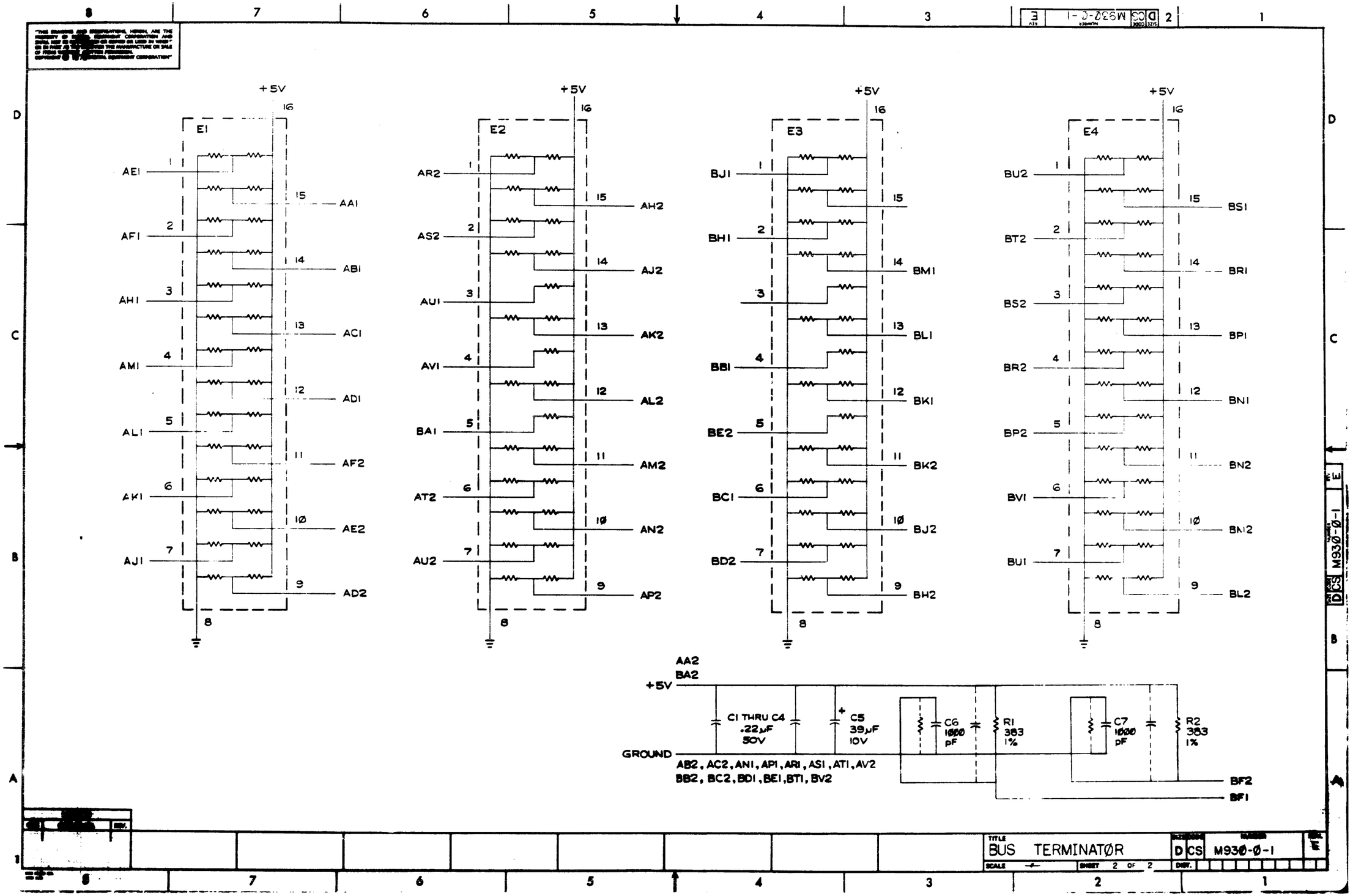

+5V
E1
E2
E3
E4
AE1
AF1
AH1
AM1
AL1
AK1
AJ1
AA1
AB1
AC1
AD1
AF2
AE2
AD2
AR2
AS2
AU1
AV1
BA1
AT2
AU2
AH2
AJ2
AK2
AL2
AM2
AN2
AP2
BJ1
BH1
BB1
BE2
BC1
BD2
BM1
BL1
BK1
BK2
BJ2
BH2
BU2
BT2
BS2
BR2
BP2
BV1
BU1
BS1
BR1
BP1
BN1
BN2
BM2
BL2
AA2
BA2
+5V
GROUND
C1 THRU C4
.22µF
50V
C5
39µF
10V
C6
1000
pF
R1
383
1%
C7
1000
pF
R2
383
1%
AB2, AC2, AN1, AP1, AR1, AS1, AT1, AV2
BB2, BC2, BD1, BE1, BT1, BV2
BF2
BF1
TITLE
BUS TERMINATØR
D
CS
M93Ø-Ø-1
SCALE
SHEET 2 OF 2

THIS SCHEMATIC IS FURNISHED ONLY FOR TEST AND MAINTENANCE PURPOSES. THE CIRCUITS ARE PROPRIETARY IN NATURE AND SHOULD BE TREATED ACCORDINGLY.
COPYRIGHT 1968 BY DIGITAL EQUIPMENT CORPORATION

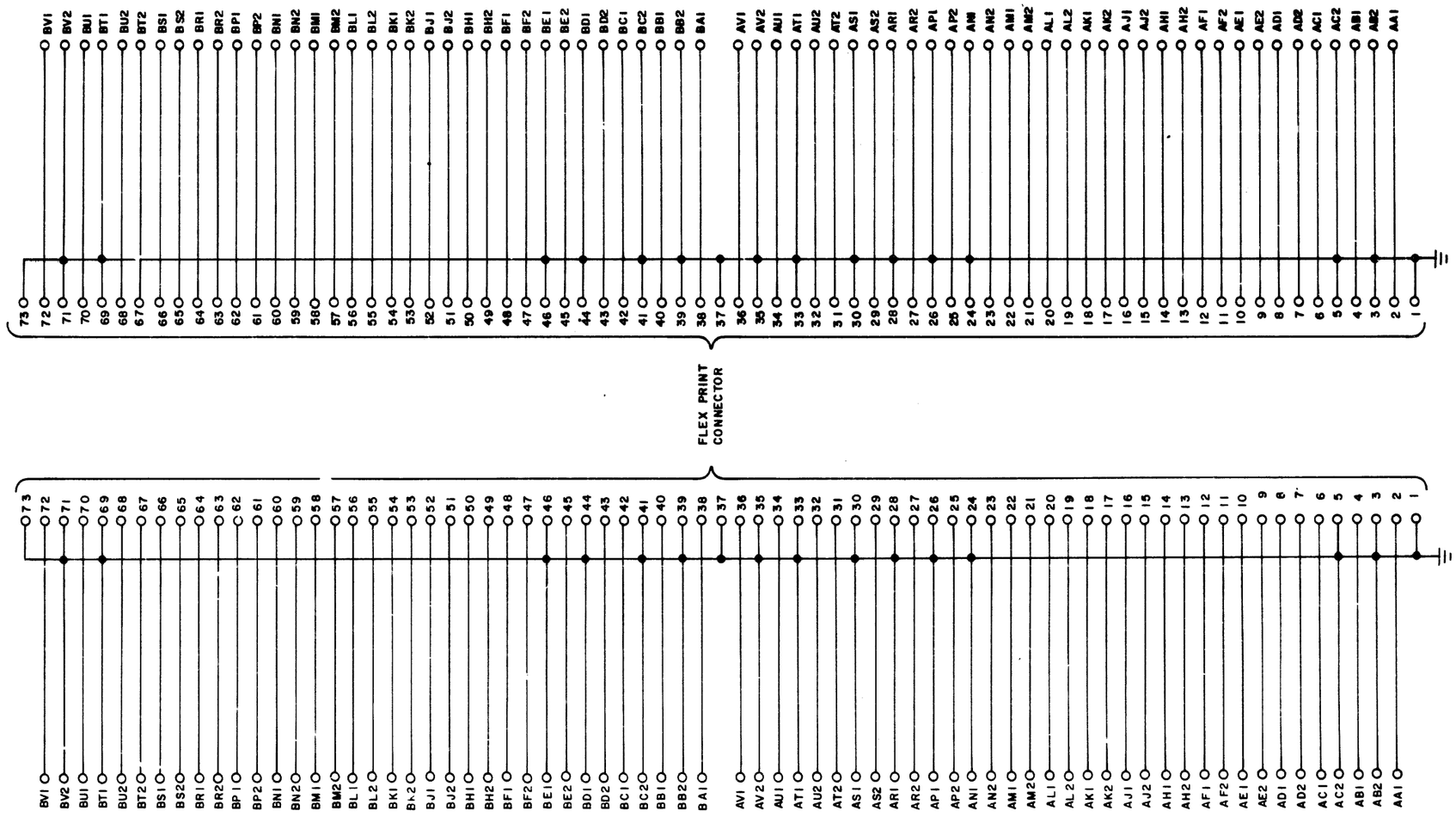

REVISIONS			
CHK	CHG NO.	REV.	
	00001	A	
	00002	B	
	00004	C	

DEC FORM NO. DRW-102

DRN.	DATE	11-6-69
CHK'D	DATE	11-6-69
ENG.	DATE	7-17-70
PROD.	DATE	7/26/70

TRANSISTOR & DIODE CONVERSION CHART

DEC	EIA	DEC	EIA

digital EQUIPMENT CORPORATION MAYNARD, MASSACHUSETTS

TITLE INTERNAL BUS CONNECTOR M920

SIZE	CODE	NUMBER	REV.
C	CS	M920-0-1	C

PRINTED CIRCUIT REV.

SIZE C | CODE CS | NUMBER M920-0-1 | REV. C

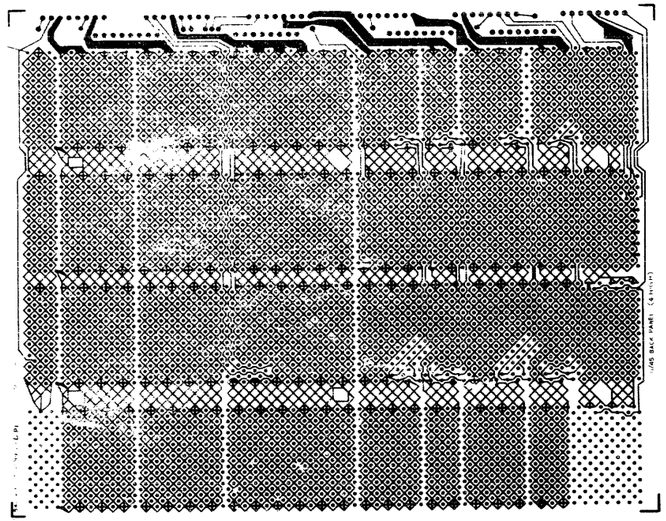

SOLDER SIDE (SIDE 2)

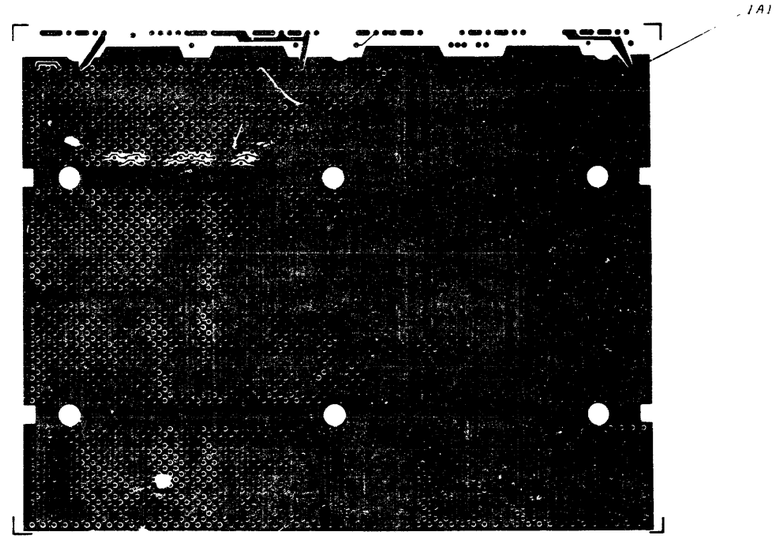

QTY	REF DESIGNATION	DESCRIPTION	PART NO.	ITEM NO.
		AS-DRILLING HOLE LAYOUT	D AH-5409910-0-5	5
		11/45 BACK PANEL	F-1A 5009909-0-0	4
REF		X-Y COORDINATE HOLE LOC	K-CO-5409910-0-4	3
REF		MODULE HISTORY	E-MH-5409910-0-6	2
		ETCHED CIRCUIT BOARD	5009909	1

PARTS LIST

ETCH BOARD REV D

IC TYPE	GND	+5V
GND AND 5V ARE USUALLY PIN 7 AND 14 RESPECTIVELY EXCEPTIONS ARE STATED ABOVE		

IC PIN LOCATIONS

ITEM NO.	AWG	FROM PT	TO PT

JUMPER LIST

REV	CHANGE NO	CHK
A	5409910-0000	
C	ORIGINATED	

REVISIONS

DEC NO	EIA NO.	DEC NO.	EIA NO.

SEMICONDUCTOR CONVERSION CHART

DRN: K. Ruiz DATE: 1-21-72
CHK'D: [illegible] DATE: 1/21/72
ENG: [illegible] DATE: 1/21/72
APPD: [illegible] DATE: 1/21/72
MFG: [illegible] DATE: 1/21/72

NEXT HIGHER ASSY: E-AD-7008753-0-0
SCALE: 1/1
SHEET 1 OF 1

[redacted] EQUIPMENT CORPORATION
HUDSON MASSACHUSETTS

TITLE: CIRCUIT SCHEMATIC

SIZE: E CS 5409910-0-1 REV: F

1A1

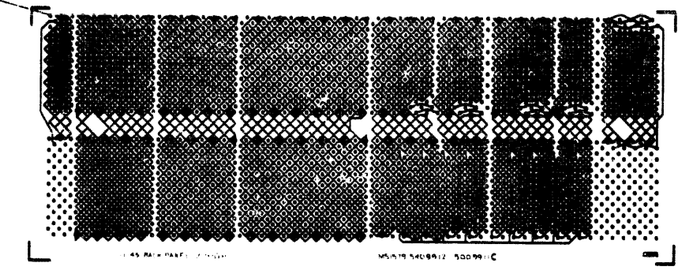

SOLDER SIDE (SIDE 2)

1A1

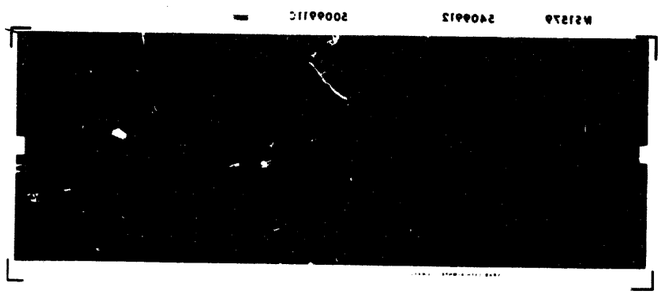

QTY	REF DESIGNATION	DESCRIPTION	PART NO.	
		X-Y COORDINATE HOLE LOC	X-CO-5409912-0-5	3
		MODULE ECO HISTORY	B-MH-5409912-0-6	2
		ETCHED CIRCUIT BOARD	D-1A-5009911-0-8	1

PARTS LIST

ETCH BOARD REV C

IC TYPE	GND	+5V
GND AND 5V ARE SIGNAL PIN 7 AND 14 REGARDLESS OF DESIGNATION AND STATED ABOVE		
IC DIM LOCATIONS		

ITEM NO.	AWG	FROM PT	TO PT

JUMPER LIST

DEC NO	EIA NO	DEC NO	EIA NO

SEMICONDUCTOR CONVERSION CHART

REVISIONS

NEXT HIGHER ASSY E-AD-7008753-0-0

SCALE 1 X 1

SHEET 1 OF 1

[redacted] EQUIPMENT CORPORATION

TITLE CIRCUIT SCHEMATIC

CS5409912-0-1 C

123

This drawing and specifications, herein, are the property of Digital Equipment Corporation and shall not be reproduced or copied or used in whole or in part as the basis for the manufacture or sale of items without written permission.

NOTE

1. FOR 11/45 SYSTEMS BUILT WITH 860 POWER CONTROLS, REFER TO D-IC-11/45-0-1 REV. A DRAWING.

TABLE I

POWER SYSTEM - MAJOR ECO SUMMARY

ECO#	D-IC-11/45-0-1 REV CHANGES (PROBLEM-SOLUTION) FROM REV	TO REV	DESCRIPTION
11/45-00031	A	B	REPLACED OBSOLETE 660 POWER CONTROL WITH 861 POWER CONTROL. (D-IC-11/45-0-1 REV. A DOCUMENTS MACHINES WITH 860 POWER CONTROL.)
11/45-00054	C	D	POWER DISTRIBUTION REDESIGNED TO ACCOMMODATE H754 REGULATOR (+20V, -5V) FOR 16K MEMORY. MAIN POWER HARNESS CHANGED FROM 7008784 TO 7009540. SYSTEM UNIT POWER DISTRIBUTION MOVED FROM BACK OF CPU BOX TO TOP REAR OF CPU BOX. SYSTEM UNIT CONNECTORS CHANGED FROM FLAT 8-PIN CONNECTOR TO 15-PIN AND 6-PIN RECTANGULAR CONNECTOR-PAIR. MACHINES WITH THIS ECO HAVE SERIAL NO'S ≥ 2000.
11/45-00057	D	E	7009540 HARNESS REVISED TO DISTRIBUTE +15V TO SYSTEM UNITS WHEN H754 REGULATOR IS INSTALLED FOR 16K MEMORY. P45/J45 (FLAT 4-PIN CONNECTORS) ADDED TO HARNESS NEAR P7. AFFECTS ONLY MACHINES WITH S/N ≥ 2000.
11/45-00060	E	F	+5V FROM SLOT D H744 REWIRED TO LOWER VOLTAGE DROPS TO SYSTEM UNITS.
11/45-00061	F	H	CPU HARNESS MODIFIED TO ACCOMODATE SECOND H746 MOS REGULATOR. ADD P33 TO 7009354 HARNESS NEAR P29 MACHINE WITH S/N ≥ 2000. IF S/N < 2000 P33 OF THE 7009354 HARNESS IS REWIRED TO DISTRIBUTE MOS VOLTAGE FROM AN H746 IN SLOT L OF THE LOWER H742. KB11-A ECO# MUST BE INSTALLED AT SAME TIME

90-135V/47-63Hz (2-PHASE 120° OR 180° DISPLACED) OR 180-270V/47-63Hz SINGLE PHASE

BLK
GRN
WHT

861-A: NEMA L14-20P CONNECTOR
861-B: NEMA L6-20P CONNECTOR

*861 POWER CONTROL

REFER TO CIRCUIT SCHEMATIC

D-CS-861-A-1 OR D-CS-861-B-1

SWITCHED AND UNSWITCHED AC OUTLETS ARE INDICATED BY PANEL MARKINGS.

*861-A: 90-135V/47-63Hz 2-PHASE (120° OR 180° DISPLACED)
861-B: 230V/60Hz

P1-4 → 1 KEY 1
P1-3 → 2 KEY 2 → 3 KEY 2
P13-6 → 1 TERM 1
P13-5 → 2 TERM 1 → 3 TERM 2
1 2 3

PART OF POWER DISTRIBUTION CABLE HARNESS

UPPER H742 POWER SUPPLY
REFER TO D-CS-H742-0-1

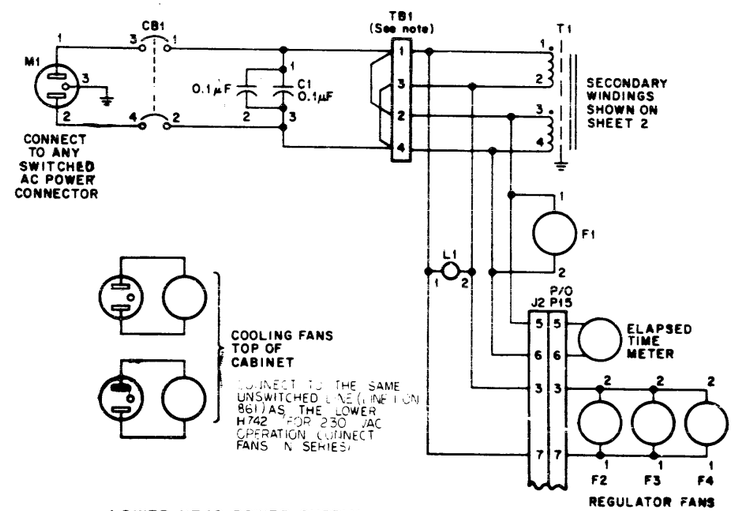

LOWER H742 POWER SUPPLY

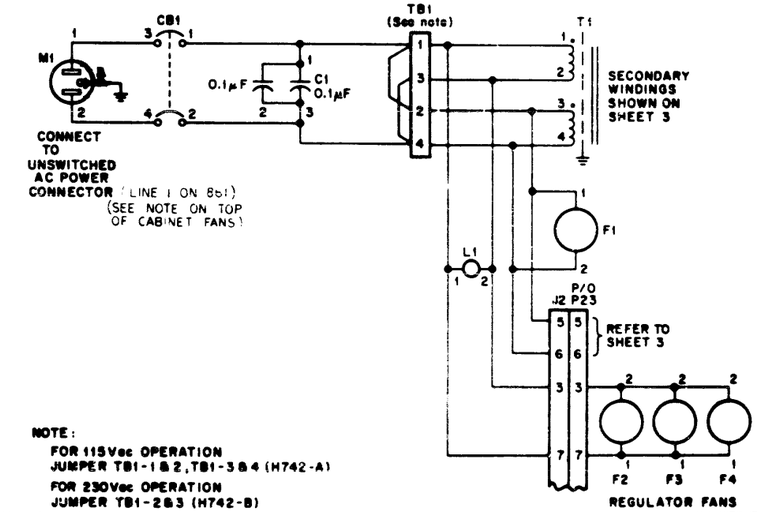

NOTE:
FOR 115Vac OPERATION
JUMPER TB1-1&2, TB1-3&4 (H742-A)
FOR 230Vac OPERATION
JUMPER TB1-2&3 (H742-B)

TABLE II

MEMORY CONFIGURATION	REGULATOR SLOTS H	J	K	L	JUMPERS +5V2 (PS-7593)	+5V1 (PS-3541)	+5V3 (PS-7578)
BIPOLAR ONLY	-	-	-	-	-	-	-
1-16K	H744	X	X	X	IN	IN	IN
2-4K	H744	H744	X	X	X	IN	IN
2-16K	H744	H744	H744	X	X	X	IN
3-16K	H744	H744	H744	H744	X	X	X
MOS ONLY	-	-	-	-	-	-	-
4-4K	H746c	H744	X	X	IN	IN	IN
1-16K	H746c	H744	X	H746	IN	IN	IN
MIXED MOS BIPOLAR	-	-	-	-	-	-	-
4-16K MOS, 1-16K BIPOLAR	H746c	H744	H744	X	IN	X	IN
4-16K MOS, 3-4K BIPOLAR	H746	H744	H744	H744	IN	X	X

REV	DESCRIPTION	DATE	APPROVED
A	11/45-00031	3-22-74	J. MINOR
B	11/45-00047	7-15-74	V. BOAEN
C	11/45-00052	7-15-74	V. BOAEN
D	11/45-00054	1-7-74	V. BOAEN
E	11/45-00057	3-21-74	V. BOAEN
F	11/45-00060	3-6-74	V. BOAEN
H	11/45-00061	4-1-74	V. BOAEN

FIRST USED ON OPTION/MODEL	QTY	DESCRIPTION	PART NO	ITEM NO.
11/45		PARTS LIST		

UNLESS OTHERWISE SPECIFIED DIMENSION IN INCHES TOLERANCES
DECIMALS: XXX ± .005, XX ± .02, X ± .1 — ANGLES: ±0° 30'
REMOVE BURRS AND BREAK SHARP CORNERS SURFACE QUALITY ✓
MATERIAL
FINISH

DRN. DATE
CHK. DATE
ENG. DATE
MGR ENG DATE
PROD DATE

digital EQUIPMENT CORPORATION MAYNARD MASSACHUSETTS

TITLE: POWER SYSTEM CONFIGURATION

NEXT HIGHER ASSY: H 00-11/45 Ø
SIZE D | CODE IC | NUMBER 11/45-Ø-1 | REV. H
SCALE
SHEET 1 OF 5
DIST

THIS DRAWING AND SPECIFICATIONS, HEREIN, ARE THE PROPERTY OF DIGITAL EQUIPMENT CORPORATION AND SHALL NOT BE REPRODUCED OR COPIED OR USED IN WHOLE OR IN PART AS THE BASIS FOR THE MANUFACTURE OR SALE OF ITEMS WITHOUT WRITTEN PERMISSION.
COPYRIGHT ©1973 DIGITAL EQUIPMENT CORPORATION

UPPER H742

SECONDARY - H742

TB2

20-30 VAC
20-30 VAC
20-30 VAC
20-30 VAC
20-30 VAC
AC27 115 VAC
AC28
115 VAC

J1 P14
+8VI
+15V1
+15V2
GND1
GND2
GND3
LO GND1
AC LO1
DC LO2
AC LO4
LINE CLOCK
DC LO1

P2-8 WHT
P25-4 GRY
P12-2 GRY
P21-3 BLK
P8-8 BLK
P25-3 BLK
P10-1 BLK 18GA
P3-7 YEL 18GA
P22-10 YEL 18GA
P22-8 YEL 18GA
P7-7 YEL 18GA
P37-2 BRN 18GA
P3-8 VIO 18GA

J3 P16
AC-1 RED P18-6
WHT P18-7
AC-3 P19-6 RED
AC-4 P19-7 WHT

J2 P15
AC-5 P17-6 RED
AC-6 P17-7 WHT
AC-7 P20-6 RED
AC-8 P20-7 WHT
AC-9 P21-6 RED
AC-10 P21-8 WHT
RED
WHT
TO H742 FANS

P7 H744 +5V REGULATOR (FP11) SLOT A
RED P15-1
WHT P15-2
AC-5
AC-6
+5VA1
GND A1
GND A2
+5VA2
P17
P2-6 RED
P8-2 BLK
P8-1 BLK
P2-5 RED

P18 H744 +5V REGULATOR SLOT B
RED P16-3
WHT P16-4
AC-1
AC-2
+5VB1
GND B1
GND B2
+5VB2
P18
P2-2 RED
P8-4 BLK
P8-3 BLK
P2-1 RED

P19 H744 +5V REGULATOR SLOT C
RED P16-7
WHT P16-8
AC-3
AC-4
+5VC1
GND C1
GND C2
+5VC2
P19
P3-6 RED
P8-6 BLK
P8-5 BLK
P3-5 RED

P20 H744 +5V REGULATOR SLOT D
RED P15-8
WHT P15-10
AC-7
AC-8
+5VD1
GND D1
GND D2
+5VD2
P20
P36-1 RED
P36-7 BLK
P12-7 BLK
P12-1 RED

P21 SEE NOTE #3 H745 -15V REGULATOR (SYSTEM UNITS) SLOT E
RED P15-9
WHT P15-12
AC-9
AC-10
-15VE1
GND E1
GND D1
+15V3
+15V
P21
P36-13 BLU
P36-11 BLK
P14-4 BLK
P25-5 GRY

P34
P35
TO ELAPSED TIME METER

TO LOWER H742

P40-H754
BLK P12-5
BRN P12-14
ORN P12-3
P15-9
P15-12
GND E2
-5VE1
+20VE1
AC-9
AC-10
SEE NOTE #2
TWP

TO PLUGS ON SHEET 2

H45/J45
BLU P7-1
BLU
BLU(-15VF1) P25-1
BLU(-15V2) P12-13
SEE NOTE 2
-15V3

P5
RED P28-5 +5VH2
RED P28-2 +5VH1
RED +5V1
BLUE P3-1 -15V5
BLUE P22-4 -15V1
RED +5V2
+5V2

P6
VIO P14-3 DC LO Y
GRN P30-4 +19.7VH1
YEL P30-5 +23.2VH1
BRN P26-3 -5VH1
RED P29-5 +5VL2
RED P29-2 +5VL1
RED +5V3
+5V3
*SEE TABLE 2

P7
BLUE -15V3
BLUE P3-4 -15V6
BLUE P1-5 -15V4
VIO 18GA P22-9 DC LO 2
RED P27-5 +5VJ2
RED P4-4 +5V1
YEL P14-10 AC LO 2
RED P12-4 +5V4

P8
BLK P17-4 GND A2
BLK P17-3 GND A1
BLK P18-4 GND B2
BLK P18-3 GND B1
BLK P19-4 GND C2
BLK P19-3 GND C1
P41 BLK GND I3
BLK P14-5 GND 2

P1
GRY P3-3 +15V5
BLK P10-3 GND 11
BLK P32-3 PWR CONT COM 1
WHT P32-1 PWR CONT SW 1
BLU P7-3 -15V4
BLK P10-4 GND 12
BLK P36-5 GND 14
RED P36-4 +5V 6

P2
RED P18-5 +5VB2
RED P18-2 +5VE1
RED P17-5 +5VA2
RED P17-2 +5VA1
BRN 18GA P37-2 LINE CLK
WHT P14-1 +8V

P3
BLU P5-5 -15V5
GRY P36-2 +15V4
GRY P1-1 +15V3
BLU P7-2 -15V6
RED P19-5 +5VC2
RED P19-2 +5VC1
YEL 18GA P14-8 AC LO 1
VIO 18GA P14-12 DC LO 1

P4
RED P31-5 +5VH2
RED P31-2 +5VH1
VIO 18GA P22-12 DC LO X
RED P7-6 +5V5
RED P27-2 +5VJ1
GRN P26-4 +19.7 VH1
YEL P20-5 +23.2 VH1

REVISIONS	REV	CHANGE NO	CHK

FIRST USED ON OPTION/MODEL	QTY.	DESCRIPTION	PART NO.
11/45		PARTS LIST	

UNLESS OTHERWISE SPECIFIED DIMENSION IN INCHES
TOLERANCES: DECIMALS .XXX = .005, .XX = .02, .X = .1; ANGLES ±0° 30'
REMOVE BURRS AND BREAK SHARP CORNERS SURFACE QUALITY √

DRN. H. Cornetta	DATE 8/10/73	digital EQUIPMENT CORPORATION
CHK'D.	DATE	
ENG.	DATE	
PROJ. ENG.	DATE	
PROD.	DATE	
MATERIAL	NEXT HIGHER ASSY.	
FINISH	SCALE NONE	SIZE D CODE IDENT NO. DIC REV. H
	SHEET 2 OF 5	DIST.

TITLE 11/45 POWER SYSTEM (UPPER H742)

DIC 11/45-0-1

125

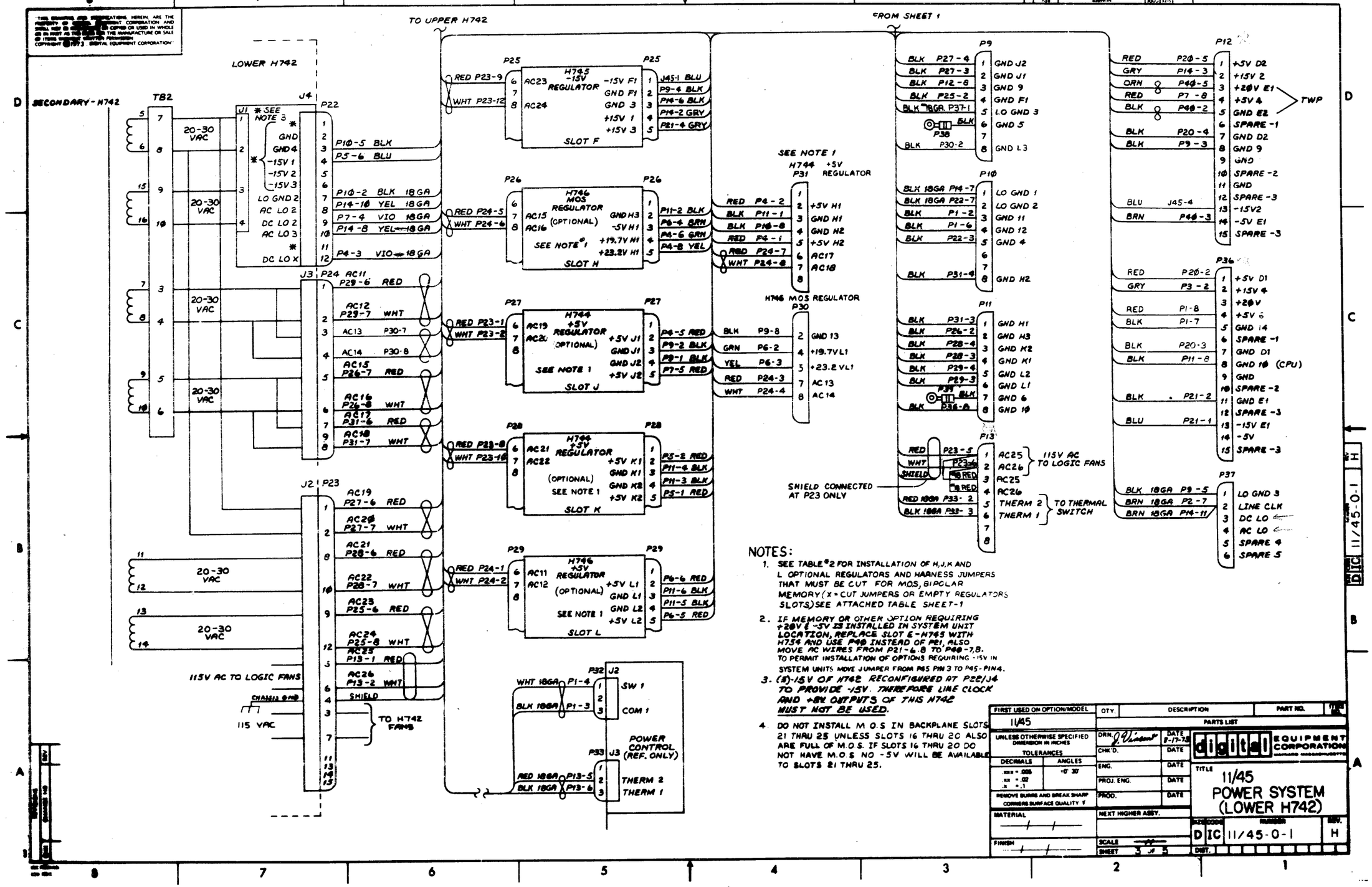

NOTES:

1. SEE TABLE #2 FOR INSTALLATION OF H,J,K AND L OPTIONAL REGULATORS AND HARNESS JUMPERS THAT MUST BE CUT FOR MOS, BIPOLAR MEMORY (X = CUT JUMPERS OR EMPTY REGULATORS SLOTS) SEE ATTACHED TABLE SHEET-1
2. IF MEMORY OR OTHER OPTION REQUIRING +20V & -5V IS INSTALLED IN SYSTEM UNIT LOCATION, REPLACE SLOT E-H745 WITH H754 AND USE P40 INSTEAD OF P21, ALSO MOVE AC WIRES FROM P21-6,8 TO P40-7,8. TO PERMIT INSTALLATION OF OPTIONS REQUIRING -15V IN SYSTEM UNITS MOVE JUMPER FROM P45 PIN 3 TO P45-PIN4.
3. (5)-15V OF H742 RECONFIGURED AT P22/J4 TO PROVIDE -15V. THEREFORE LINE CLOCK AND +8V OUTPUTS OF THIS H742 MUST NOT BE USED.
4. DO NOT INSTALL M.O.S IN BACKPLANE SLOTS 21 THRU 25 UNLESS SLOTS 16 THRU 20 ALSO ARE FULL OF M.O.S. IF SLOTS 16 THRU 20 DO NOT HAVE M.O.S NO -5V WILL BE AVAILABLE TO SLOTS 21 THRU 25.

FIRST USED ON OPTION/MODEL	QTY.	DESCRIPTION	PART NO.
11/45		PARTS LIST	

UNLESS OTHERWISE SPECIFIED DIMENSION IN INCHES
TOLERANCES: DECIMALS .XXX = .005, .XX = .02, .X = .1; ANGLES ±0° 30'
REMOVE BURRS AND BREAK SHARP CORNERS SURFACE QUALITY √
MATERIAL
FINISH

DRN. J. Vieira DATE 8-17-75
CHK'D. DATE
ENG. DATE
PROJ. ENG. DATE
PROD. DATE
NEXT HIGHER ASSY.
SCALE
SHEET 1 OF 1

digital EQUIPMENT CORPORATION

TITLE: 11/45 POWER SYSTEM (LOWER H742)

SIZE D CODE IC NUMBER 11/45-0-1 REV. H
DIST.

THIS DRAWING AND SPECIFICATIONS, HEREIN, ARE THE PROPERTY OF DIGITAL EQUIPMENT CORPORATION AND SHALL NOT BE REPRODUCED OR COPIED OR USED IN WHOLE OR IN PART AS THE BASIS FOR THE MANUFACTURE OR SALE OF ITEMS WITHOUT WRITTEN PERMISSION.
COPYRIGHT © 1973 DIGITAL EQUIPMENT CORPORATION

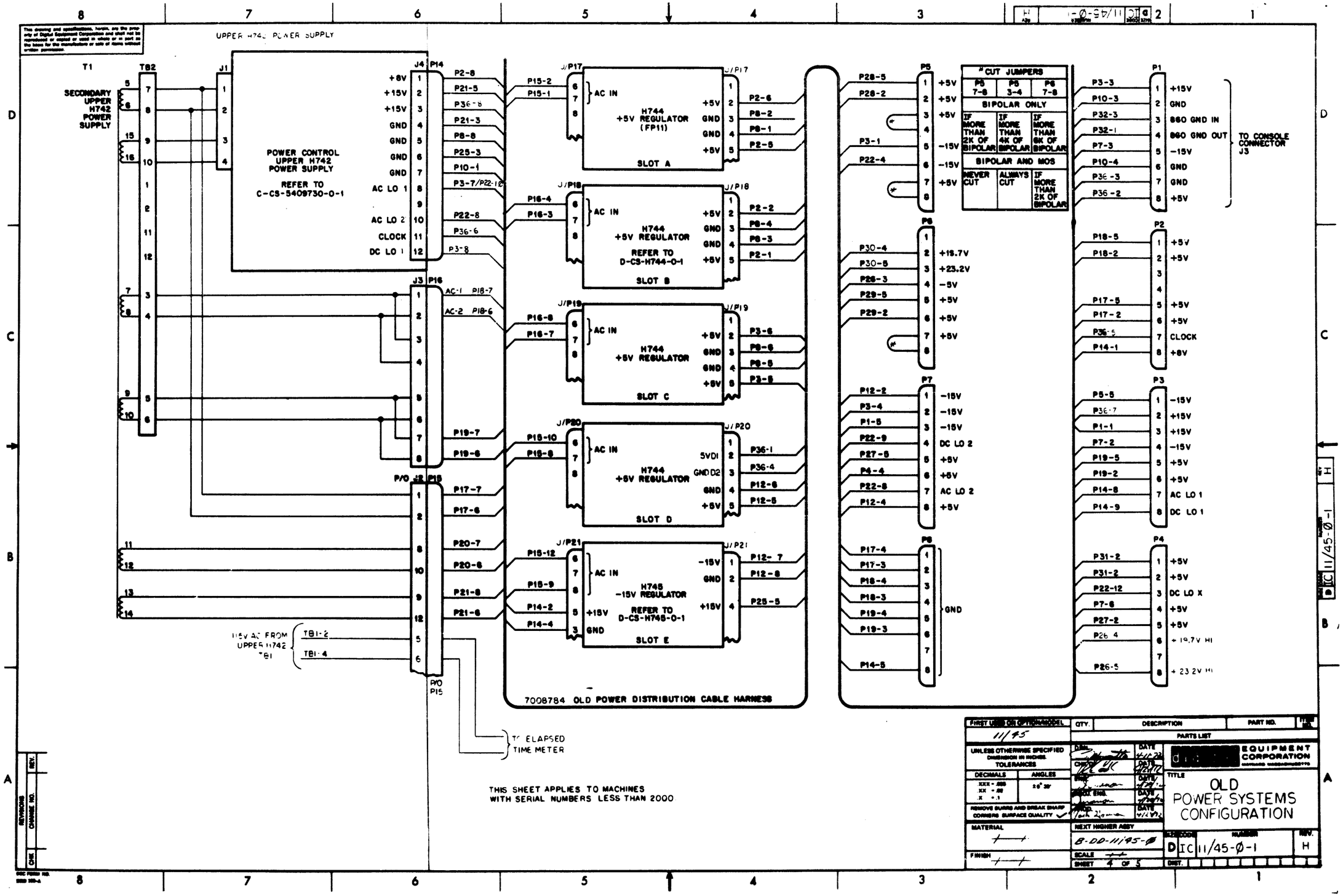

UPPER H742 POWER SUPPLY
T1
SECONDARY UPPER H742 POWER SUPPLY
TB2
J1
POWER CONTROL UPPER H742 POWER SUPPLY
REFER TO C-CS-5409730-0-1
J4 P14
+8V
+15V
+15V
GND
GND
GND
GND
AC LO 1
AC LO 2
CLOCK
DC LO 1
J3 P16
P/O J2 P15
P/O P15
115V AC FROM UPPER H742 TB1
TB1-2
TB1-4
TO ELAPSED TIME METER
J/P17
AC IN
H744 +5V REGULATOR (FP11)
SLOT A
J/P18
H744 +5V REGULATOR
REFER TO D-CS-H744-0-1
SLOT B
J/P19
H744 +5V REGULATOR
SLOT C
J/P20
H744 +5V REGULATOR
SLOT D
J/P21
H745 -15V REGULATOR
REFER TO D-CS-H745-0-1
SLOT E
7008784 OLD POWER DISTRIBUTION CABLE HARNESS
P5
P6
P7
P8
CUT JUMPERS
P5 7-8
P5 3-4
P6 7-8
BIPOLAR ONLY
IF MORE THAN 2K OF BIPOLAR
IF MORE THAN 4K OF BIPOLAR
IF MORE THAN 6K OF BIPOLAR
BIPOLAR AND MOS
NEVER CUT
ALWAYS CUT
IF MORE THAN 2K OF BIPOLAR
P1
P2
P3
P4
TO CONSOLE CONNECTOR J3
860 GND IN
860 GND OUT
CLOCK
AC LO 1
DC LO 1
DC LO X
+19.7V HI
+23.2V HI
THIS SHEET APPLIES TO MACHINES WITH SERIAL NUMBERS LESS THAN 2000
FIRST USED ON OPTION/MODEL
11/45
QTY.
DESCRIPTION
PART NO.
PARTS LIST
UNLESS OTHERWISE SPECIFIED DIMENSION IN INCHES TOLERANCES
DECIMALS
ANGLES
REMOVE BURRS AND BREAK SHARP CORNERS SURFACE QUALITY
MATERIAL
FINISH
NEXT HIGHER ASSY
B-DD-11/45-Ø
SCALE
SHEET 4 OF 5
EQUIPMENT CORPORATION
TITLE
OLD POWER SYSTEMS CONFIGURATION
D IC 11/45-Ø-1
REV. H

127

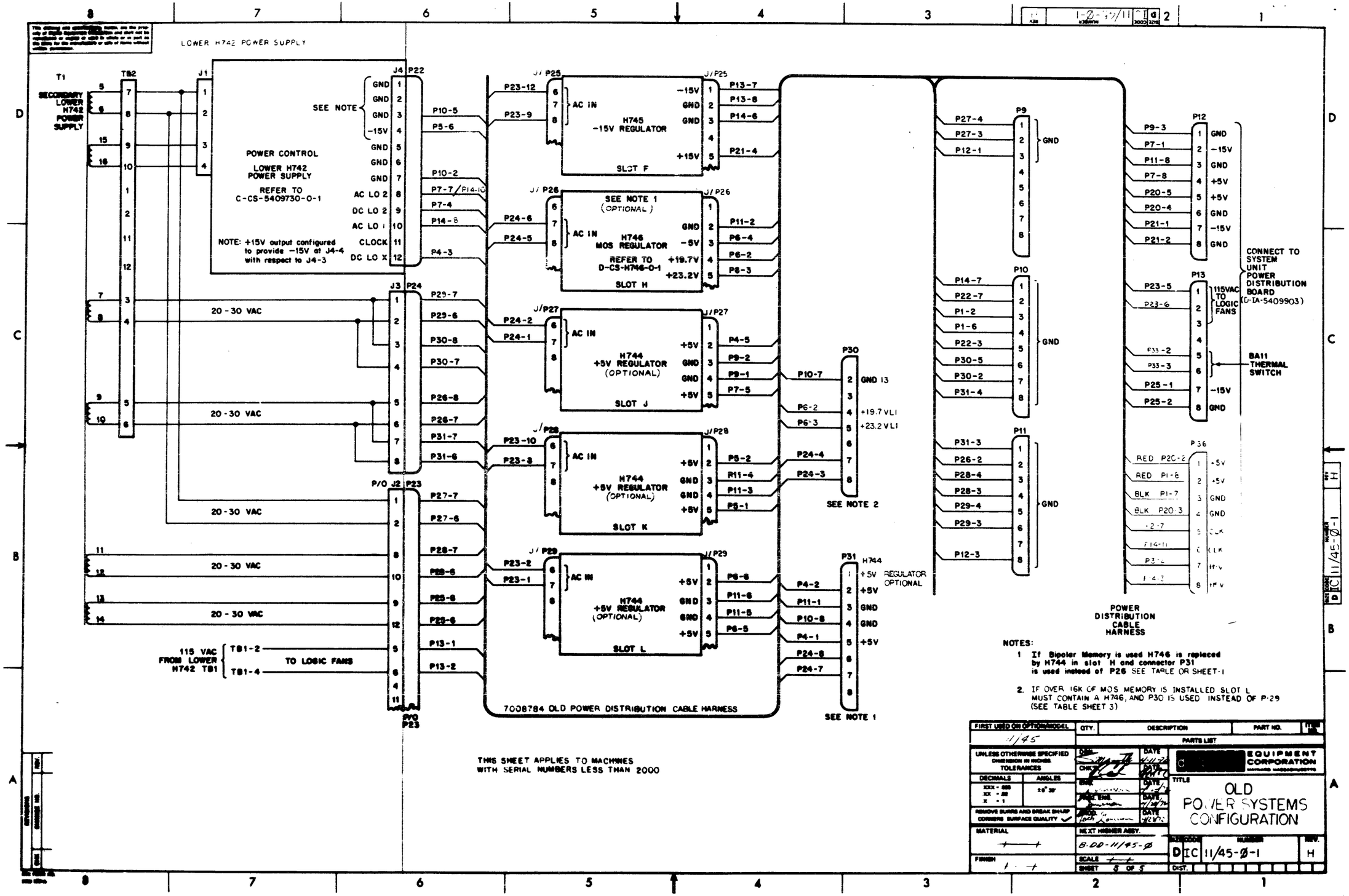
LOWER H742 POWER SUPPLY
T1
SECONDARY LOWER H742 POWER SUPPLY
TB2
J1
J4 P22
SEE NOTE
GND
-15V
POWER CONTROL
LOWER H742 POWER SUPPLY
REFER TO C-CS-5409730-0-1
NOTE: +15V output configured to provide -15V at J4-4 with respect to J4-3
AC LO 2
DC LO 2
AC LO 1
CLOCK
DC LO X
J3 P24
20-30 VAC
P/O J2 P23
115 VAC FROM LOWER H742 TB1
TB1-2
TB1-4
TO LOGIC FANS
J/P25
AC IN
H745 -15V REGULATOR
SLOT F
J/P26
SEE NOTE 1 (OPTIONAL)
H746 MOS REGULATOR
REFER TO D-CS-H746-0-1
SLOT H
J/P27
H744 +5V REGULATOR (OPTIONAL)
SLOT J
J/P28
SLOT K
J/P29
SLOT L
7008784 OLD POWER DISTRIBUTION CABLE HARNESS
P30
GND 13
+19.7 VLI
+23.2 VLI
SEE NOTE 2
P31
H744
+5V REGULATOR OPTIONAL
SEE NOTE 1
P9
P10
P11
P12
P13
115VAC TO LOGIC FANS
CONNECT TO SYSTEM UNIT POWER DISTRIBUTION BOARD (D-IA-5409903)
BA11 THERMAL SWITCH
P36
POWER DISTRIBUTION CABLE HARNESS
NOTES:
1 If Bipolar Memory is used H746 is replaced by H744 in slot H and connector P31 is used instead of P26 SEE TABLE OR SHEET-1
2. IF OVER 16K OF MOS MEMORY IS INSTALLED SLOT L MUST CONTAIN A H746, AND P30 IS USED INSTEAD OF P-29 (SEE TABLE SHEET 3)
THIS SHEET APPLIES TO MACHINES WITH SERIAL NUMBERS LESS THAN 2000
FIRST USED ON OPTION/MODEL
11/45
QTY.
DESCRIPTION
PART NO.
PARTS LIST
UNLESS OTHERWISE SPECIFIED DIMENSION IN INCHES TOLERANCES
DECIMALS
ANGLES
REMOVE BURRS AND BREAK SHARP CORNERS SURFACE QUALITY
MATERIAL
FINISH
NEXT HIGHER ASSY.
B-DD-11/45-Ø
SCALE
SHEET 5 OF 5
EQUIPMENT CORPORATION
TITLE
OLD POWER SYSTEMS CONFIGURATION
D IC 11/45-Ø-1
REV. H
DIST.

128

This drawing and specifications, herein, are the property of Digital Equipment Corporation and shall not be reproduced or copied or used in whole or in part as the basis for the manufacture or sale of items without written permission.

VOLTAGE	REGULATOR LOCATION	PIN	ROW	SLOT	MATE N LOCK CONNECTION	WIRE WRAP PIN
+5V	A	A2,V1	A-F	2-5	J2-5,6	
"	B	A2	"	6-9	J2-3,4	
"	B	V1	"	6-9	J2-3,4	
"	C	A2, V1	"	10-15	J3-5,6	
"	J	"	"	16-18	J4-6,7	
"	H2	"	"	19,20	J4-1,2 ; J5-8	
"	K	"	"	21-23	J5-1,2,3	
"	L	A2,V1	A-F	24,25	J6-5,6,7	
"	J	A2	A	16	J5-4,7, J6-8	
"	D	"	A,B	26	J7-8	
"	D	"	C-F	26-28	J7-8	
+5V	J	A2	A,B	27,28	J7-5,6	
+8V	TOP H742	B1	F	1	J2-8	SP-1
LTCL	TOP H742	R1	C	1	J2-7	
DCLOY	TOP H742	—	—	—	J6-1	SP10
DCLO1	TOP H742	U1	C	12	J3-8	
A2LO1	TOP H742	S1	C	12	J3-7	
-15V	E	B2	E	2	J3-4	SP-3
+15V	TOP H742	A1	E	15	J3-2,3	SP-4
-15V	BOT. H742	B2	E	16	J3-1	SP-5
+3.2VLI	L2	V2	A,C,E	22-25	J6-3	
+19.7VLI	L2	U2	A,C,E	22-25	J6-2	
DCLOX	BOT. H742	U2	B	16	J4-3	
-15V	BOT. H742	B2	E	21	J5-5,6	SP-8
-5V	H1	C1	F	17-20,22-25	J6-4	SP-9
+23VHI	H1	V2	A,C,E	17-20	J4-8	SP-6
+19VHI	H1	U2	A,C,E	17-20	J4-6	SP-7
ACLOZ	BOT. H742	F1	B	28	J7-7	
DCLOZ	BOT. H742	F2	E	28	J7-4	

	PIN	ROW	SLOT	MATE N LOCK CONNECTION
GROUND	C2,N2,T1	A-F	2-25	J8-1, 8
	C2, T1	A-F	1,26-28	J9-1, 8
	B2,V2	A,B	"	J10-1, 8
	N1,P1,R1,S1	A	"	J11 -1,8
	D1,E1	B	1,26-28	

NOTES:
1. THIS LISTING IS FURNISHED TO SHOW COMBINATIONS OF MATE N LOCK CONNECTORS (J#) AND WIREWRAP PINS THAT ARE TO BE ETCHED TOGETHER. VOLTAGES WILL BE WIREWRAPPED BETWEEN 5409910 AND 5409912
2. ALL MATE N LOCK CONNECTORS AND PINS LISTED ARE CONNECTED TOGETHER BY THE GROUND PLANE (5409910-4 HIGH BOARD). WIREWRAP CONNECTIONS WILL BE MADE BETWEEN DXXT1 (5409910) AND EXXC2 (5409912)-XX= SLOT NUMBERS Ø1-28

4 HIGH BOARD

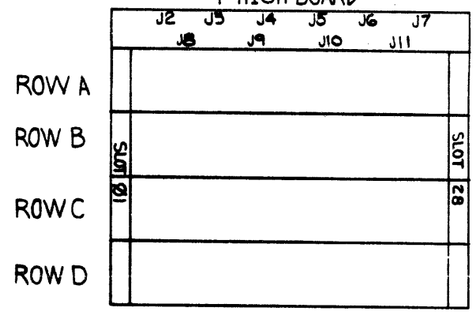

5409910
(POWER PLANE)

2 HIGH BOARD

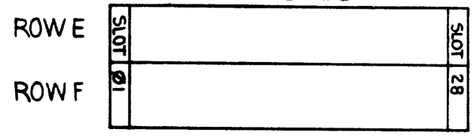

5409912
(POWER PLANE)

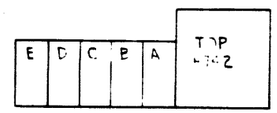

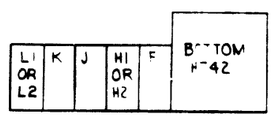

REGULATOR LOCATIONS

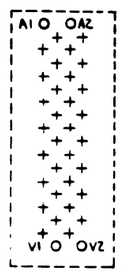

PIN CONFIGURATION
(ONE ROW-ONE SLOT SECTION)

MATE N LOCK CONNECTORS J2-J6

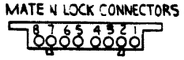

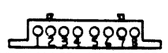

MATE N LOCK CONNECTORS J7-J11

REVISIONS			
DWG	CHANGE NO.	REV.	
11/45-0-2	11/45-000161	A	4-10-75

FIRST USED ON OPTION/MODEL: PDP11/45

QTY. | DESCRIPTION | PART NO.

PARTS LIST

UNLESS OTHERWISE SPECIFIED DIMENSION IN INCHES
TOLERANCES
DECIMALS: XXX ± .005, XX ± .02, X ± .1
ANGLES: ± 0° 30'
REMOVE BURRS AND BREAK SHARP CORNERS SURFACE QUALITY ✓
MATERIAL —
FINISH —

DWN Rybicki 4/26/72
CHK'D
ENG
PROJ MGR
PROD 5-1-72

[redacted] EQUIPMENT CORPORATION

TITLE: 11/45 BACK PANEL PC BOARD

NEXT HIGHER ASSY. B-DD-11/45-0

SCALE —

SHEET 1 OF 1

DWG D IC 11/45-0-2 REV A

DIST.

This drawing and specifications, herein, are the property of Digital Equipment Corporation and shall not be reproduced or copied or used in whole or in part as the basis for the manufacture or sale of items without written permission. COPYRIGHT 1973
DIGITAL EQUIPMENT CORPORATION

REV.	NUMBER	SIZE	CODE
C	7009540-0-2	K	WL

REVISIONS			
REV.	CHANGE NO.	CHK	
A	11/45-00057	RB	(illegible) 3-21-73 V. BOAEN
B	11/45-00060	RB	(illegible) 3-6-73 V. BOAEN
C	11/45-00061	RB	(illegible) 4-9-73 V. BOAEN

FIRST USED ON OPTION MODEL
11/45

QTY.	DESCRIPTION	PART NO.	ITEM NO.
	PARTS LIST		

DRN. B. Blaagaard	DATE 10-5-73	digital EQUIPMENT CORPORATION MAYNARD, MASSACHUSETTS
CHK'D. G. Tighe	DATE 11/5/73	
ENG. Darell Boaen	DATE 11/5/73	TITLE
PROJ. ENG. Darell Boaen	DATE 11/5/73	WIRE LIST
PROD. Jack Hanna	DATE 11-5-73	
NEXT HIGHER ASSEMBLY J-IA-7009540-0-0		SIZE K / CODE WL / NUMBER 7009540-0-2 / REV. C
SCALE —		
SHEET 1 OF —		DIST.

DEC FORM NO DRB 109

130

RUN NAME	A/P	PIN LOCATION	BAY ORDER	Q	DRAW	RV	RG	V	X	L LEVEL	REMARKS	NEW RUN INDICATOR	RUN NUM
SEE NOTE!		NOTE									ALL WIRES #14 AWG UNLESS OTHERWISE NOTED	X	1
◆15VJ		P14-2											2
		P25-4	42.25m			GRY						X	
◆15VS		P12-2											3
		P14-3	54.5m			GRY						X	
◆15W3		P21-4											4
		P25-5	51m			GRY						X	
◆15VW		P3-2											5
		P3H-2	31.5m			GRY						X	
◆15VS		P1-1											6
		P3-3	16m			GRY						X	
◆19.7VH1		P24-4											7
		P4-4	46m			GRN						X	
◆19.7VL1		P30-4											8
		P6-2	61m			GRN						X	
◆20VE1		P12-3											9
		P11-5	62.5m								OK +BLK TMP(GND E2)	X	
◆23.2VH1		P24-5											10
		P4-3	96m			VEL						X	
◆23.2VL1		P30-5											11
		P6-3	61m			VEL						X	
◆15VJ		P7-5											12
		P4-5	60m			RED						X	
◆15VC		P12-2											13
		P3-1	64m			RED						X	
◆15VD		P20-2											14
		P3-2	64m			RED						X	
◆15VC		P14-5											15
		P3-5	72m			RED						X	
◆15VC		P14-2											16
		P3-6	72m			RED						X	
◆15VH		P13-5											17
		P2-1	69m			RED						X	
◆15VA		P17-5											18
		P2-5	65.5m			RED						X	
◆15VA		P17-2											19
		P2-6	65m			RED						X	
◆15VJ		P7-6											20
		P4-4	37m			RED						X	
◆15VB		P1-8											21
		P3B-4											
◆15VS		P4-4											22
		P7-5	17m			RED						X	
◆15VH		P12-4											23
		P7-8	20.5m			RED						X	
◆15VJ		P7-7											24
		P6-8	2.25m			RED						X	
◆15VS		P5-7											25
		P5-8	2.25m			RED						X	
◆15VJ		P5-4											26
		P5-3	2.25m			RED						X	
◆15VD		P4-5											27
		P27-2	60m			RED						X	
◆15VE		P10-2											28
		P2-2	69m			RED						X	
◆15VH		P31-2											29
		P4-2	77m			RED						X	
◆15VH		P31-5											30
		P4-1	77m			RED						X	
◆15VJ		P27-5											31
		P7-5	72.5m			RED						X	
◆15VK		P24-2											32
		P5-2	81.25m			RED						X	
◆15VK		P24-5											33
		P5-1	81m			RED						X	
◆15VK		P24-2											34
		P6-6	81m			RED						X	
◆15VL		P2H-2											35
		P6-5	81m			RED						X	
◆15VL		P17-2											36
		P2-6	65m			RED						X	
◆15VA		P17-5											37
		P2-5	65.5m			RED						X	
◆15VH		P13-5											38
		P2-1	69m			RED						X	
◆15VC		P14-2											39
		P3-6	72m			RED						X	
◆15VC		P14-5											40
		P3-5	72m			RED						X	
◆15VD		P20-2											41
		P3-1	64m			RED						X	
◆15VC		P12-2											42
		P3-2	64m			RED						X	
◆15VJ		P7-6											43
		P4-5	60m			RED						X	
◆15VS		P1-2											44
		P5-5											
◆15VA		P7-2											45
		P2-6	65m			RED						X	
◆15VA		P17-2											46
		P2-5	65.5m			RED						X	
◆15VH		P13-2											47
		P2-1	69m			RED						X	
◆15VC		P14-2											48
		P3-6	72m			RED						X	
◆15VC		P14-5											49
		P3-5	72m			RED						X	
◆15VD		P20-2											50
		P3-1	64m			RED						X	
◆15VC		P12-2											51
		P3-2	64m			RED						X	
◆15VJ		P7-6											52
		P4-5	60m			RED						X	
◆15VS		P1-2											53
		P5-5											
◆15VA		P7-2											54
		P2-6	65m			RED						X	
◆15VA		P17-2											55
		P2-5	65.5m			RED						X	
◆15VH		P13-2											56
		P2-1	69m			RED						X	
◆15VC		P14-2											57
		P3-6	72m			RED						X	
◆15VC		P14-5											58
		P3-5	72m			RED						X	
◆15VD		P20-2											59
		P3-1	64m			RED						X	
◆15VC		P12-2											60
		P3-2	64m			RED						X	
◆15VJ		P7-6											61
		P4-5	60m			RED						X	
◆15VS		P1-2											62
		P5-5											
◆15VA		P7-2											63
		P2-6	65m			RED						X	
◆15VA		P17-2											64
		P2-5	65.5m			RED						X	
◆15VH		P13-2											65
		P2-1	69m			RED						X	
◆15VC		P14-2											66
		P3-6	72m			RED						X	
◆15VC		P14-5											67
		P3-5	72m			RED						X	
◆15VD		P20-2											68
		P3-1	64m			RED						X	
◆15VC		P12-2											69
		P3-2	64m			RED						X	
◆15VJ		P7-6											70
		P4-5	60m			RED						X	
◆15VS		P1-2											71
		P5-5											
◆15VA		P7-2											72
		P2-6	65m			RED						X	
◆15VA		P17-2											73
		P2-5	65.5m			RED						X	
◆15VH		P13-2											74
		P2-1	69m			RED						X	
◆15VC		P14-2											75
		P3-6	72m			RED						X	
◆15VC		P14-5											76
		P3-5	72m			RED						X	
◆15VD		P20-2											77
		P3-1	64m			RED						X	
◆15VC		P12-2											78
		P3-2	64m			RED						X	
◆15VJ		P7-6											79
		P4-5	60m			RED						X	
◆15VS		P1-2											80
		P5-5											
◆15VA		P7-2											81
		P2-6	65m			RED						X	
◆15VA		P17-2											82
		P2-5	65.5m			RED						X	
◆15VH		P13-2											83
		P2-1	69m			RED						X	
◆15VC		P14-2											84
		P3-6	72m			RED						X	
◆15VC		P14-5											85
		P3-5	72m			RED						X	
◆15VD		P20-2											86
		P3-1	64m			RED						X	
◆15VC		P12-2											87
		P3-2	64m			RED						X	
◆15VJ		P7-6											88
		P4-5	60m			RED						X	
◆15VS		P1-2											89
		P5-5											
◆15VA		P7-2											90
		P2-6	65m			RED						X	
◆15VA		P17-2											91
		P2-5	65.5m			RED						X	
◆15VH		P13-2											92
		P2-1	69m			RED						X	
◆15VC		P14-2											93
		P3-6	72m			RED						X	
◆15VC		P14-5											94
		P3-5	72m			RED						X	
◆15VD		P20-2											95
		P3-1	64m			RED						X	
◆15VC		P12-2											96
		P3-2	64m			RED						X	
◆15VJ		P7-6											97
		P4-5	60m			RED						X	
◆15VS		P1-2											98
		P5-5											
◆15VA		P7-2											99
		P2-6	65m			RED						X	
◆15VA		P17-2											100
		P2-5	65.5m			RED						X	
◆15VH		P13-2											101
		P2-1	69m			RED						X	
◆15VC		P14-2											102
		P3-6	72m			RED						X	
◆15VC		P14-5											103
		P3-5	72m			RED						X	
◆15VD		P20-2											104
		P3-1	64m			RED						X	
◆15VC		P12-2											105
		P3-2	64m			RED						X	
◆15VJ		P7-6											106
		P4-5	60m			RED						X	
◆15VS		P1-2											107
		P5-5											
◆15VA		P7-2											108
		P2-6	65m			RED						X	
◆15VA		P17-2											109
		P2-5	65.5m			RED						X	
◆15VH		P13-2											110
		P2-1	69m			RED						X	
◆15VC		P14-2											111
		P3-6	72m			RED						X	
◆15VC		P14-5											112
		P3-5	72m			RED						X	
◆15VD		P20-2											113
		P3-1	64m			RED						X	
◆15VC		P12-2											114
		P3-2	64m			RED						X	
◆15VJ		P7-6											115
		P4-5	60m			RED						X	
◆15VS		P1-2											116
		P5-5											
◆15VA		P7-2											117
		P2-6	65m			RED						X	
◆15VA		P17-2											118
		P2-5	65.5m			RED						X	
◆15VH		P13-2											119
		P2-1	69m			RED						X	
◆15VC		P14-2											120
		P3-6	72m			RED						X	
◆15VC		P14-5											121
		P3-5	72m			RED						X	
◆15VD		P20-2											122
		P3-1	64m			RED						X	
◆15VC		P12-2											123
		P3-2	64m			RED						X	
◆15VJ		P7-6											124
		P4-5	60m			RED						X	
◆15VS		P1-2											125
		P5-5											
◆15VA		P7-2											126
		P2-6	65m			RED						X	
◆15VA		P17-2											127
		P2-5	65.5m			RED						X	
◆15VH		P13-2											128
		P2-1	69m			RED						X	
◆15VC		P14-2											129
		P3-6	72m			RED						X	
◆15VC		P14-5											130
		P3-5	72m			RED						X	
◆15VD		P20-2											131
		P3-1	64m			RED						X	
◆15VC		P12-2											132
		P3-2	64m			RED						X	
◆15VJ		P7-6											133
		P4-5	60m			RED						X	
◆15VS		P1-2											134
		P5-5											
◆15VA		P7-2											135
		P2-6	65m			RED						X	
◆15VA		P17-2											136
		P2-5	65.5m			RED						X	
◆15VH		P13-2											137
		P2-1	69m			RED						X	
◆15VC		P14-2											138
		P3-6	72m			RED						X	
◆15VC		P14-5											139
		P3-5	72m			RED						X	
◆15VD		P20-2											140
		P3-1	64m			RED						X	
◆15VC		P12-2											141
		P3-2	64m			RED						X	
◆15VJ		P7-6											142
		P4-5	60m			RED						X	
◆15VS		P1-2											143
		P5-5											
◆15VA		P7-2											144
		P2-6	65m			RED						X	
◆15VA		P17-2											145
		P2-5	65.5m			RED						X	
◆15VH		P13-2											146
		P2-1	69m			RED						X	
◆15VC		P14-2											147
		P3-6	72m			RED						X	
◆15VC		P14-5											148
		P3-5	72m			RED						X	
◆15VD		P20-2											149
		P3-1	64m			RED						X	
◆15VC		P12-2											150
		P3-2	64m			RED						X	
◆15VJ		P7-6											151
		P4-5	60m			RED						X	
◆15VS		P1-2											152
		P5-5											
◆15VA		P7-2											153
		P2-6	65m			RED						X	
◆15VA		P17-2											154
		P2-5	65.5m			RED						X	
◆15VH		P13-2											155
		P2-1	69m			RED						X	
◆15VC		P14-2											156
		P3-6	72m			RED						X	
◆15VC		P14-5											157
		P3-5	72m			RED						X	
◆15VD		P20-2											158
		P3-1	64m			RED						X	
◆15VC		P12-2											159
		P3-2	64m			RED						X	
◆15VJ		P7-6											160
		P4-5	60m			RED						X	
◆15VS		P1-2											161
		P5-5											
◆15VA		P7-2											162
		P2-6	65m			RED						X	
◆15VA		P17-2											163
		P2-5	65.5m			RED						X	
◆15VH		P13-2											164
		P2-1	69m			RED						X	
◆15VC		P14-2											165
		P3-6	72m			RED						X	
◆15VC		P14-5											166
		P3-5	72m			RED						X	
◆15VD		P20-2											167
		P3-1	64m			RED						X	
◆15VC		P12-2											168
		P3-2	64m			RED						X	
◆15VJ		P7-6											169
		P4-5	60m			RED						X	
◆15VS		P1-2											170
		P5-5											
◆15VA		P7-2											171
		P2-6	65m			RED						X	
◆15VA		P17-2											172
		P2-5	65.5m			RED						X	
◆15VH		P13-2											173
		P2-1	69m			RED						X	
◆15VC		P14-2											174
		P3-6	72m			RED						X	
◆15VC		P14-5											175
		P3-5	72m			RED						X	
◆15VD		P20-2											176
		P3-1	64m			RED						X	
◆15VC		P12-2											177
		P3-2	64m			RED						X	
◆15VJ		P7-6											178
		P4-5	60m			RED						X	
◆15VS		P1-2											179
		P5-5											
◆15VA		P7-2											180
		P2-6	65m			RED						X	
◆15VA		P17-2											181
		P2-5	65.5m			RED						X	
◆15VH		P13-2											182
		P2-1	69m			RED						X	
◆15VC		P14-2											183
		P3-6	72m			RED						X	
◆15VC		P14-5											184
		P3-5	72m			RED						X	
◆15VD		P20-2											185
		P3-1	64m			RED						X	
◆15VC		P12-2											186
		P3-2	64m			RED						X	
◆15VJ		P7-6											187
		P4-5	60m			RED						X	
◆15VS		P1-2											188
		P5-5											
◆15VA		P7-2											189
		P2-6	65m			RED						X	
◆15VA		P17-2											190
		P2-5	65.5m			RED						X	
◆15VH		P13-2											191
		P2-1	69m			RED						X	
◆15VC		P14-2											192
		P3-6	72m			RED						X	
◆15VC		P14-5											193
		P3-5	72m			RED						X	
◆15VD		P20-2											194
		P3-1	64m			RED						X	
◆15VC		P12-2											195
		P3-2	64m			RED						X	
◆15VJ		P7-6											196
		P4-5	60m			RED						X	
◆15VS		P1-2											197
		P5-5											
◆15VA		P7-2											198
		P2-6	65m			RED						X	
◆15VA		P17-2											199
		P2-5	65.5m			RED						X	
◆15VH		P13-2											200
		P2-1	69m			RED						X	
◆15VC		P14-2											201
		P3-6	72m			RED						X	
◆15VC		P14-5											202
		P3-5	72m			RED						X	
◆15VD		P20-2											203
		P3-1	64m			RED						X	
◆15VC		P12-2											204
		P3-2	64m			RED						X	
◆15VJ		P7-6											205
		P4-5	60m			RED						X	
◆15VS		P1-2											206
		P5-5											
◆15VA		P7-2											207
		P2-6	65m			RED						X	
◆15VA		P17-2											208
		P2-5	65.5m			RED						X	
◆15VH		P13-2											209
		P2-1	69m			RED						X	
◆15VC		P14-2											210
		P3-6	72m			RED						X	
◆15VC		P14-5											211
		P3-5	72m			RED						X	
◆15VD		P20-2											212
		P3-1	64m			RED						X	
◆15VC		P12-2											213
		P3-2	64m			RED						X	
◆15VJ		P7-6											214
		P4-5	60m			RED						X	
◆15VS		P1-2											215
		P5-5											
◆15VA		P7-2											216
		P2-6	65m			RED						X	
◆15VA		P17-2											217
		P2-5	65.5m			RED						X	
◆15VH		P13-2											218
		P2-1	69m			RED						X	
◆15VC		P14-2											219
		P3-6	72m			RED						X	
◆15VC		P14-5											220
		P3-5	72m			RED						X	
◆15VD		P20-2											221
		P3-1	64m			RED						X	
◆15VC		P12-2											222
		P3-2	64m			RED						X	
◆15VJ		P7-6											223
		P4-5	60m			RED						X	
◆15VS		P1-2											224
		P5-5											
◆15VA		P7-2											225
		P2-6	65m			RED						X	
◆15VA		P17-2											226
		P2-5	65.5m			RED						X	
◆15VH		P13-2											227
		P2-1	69m			RED						X	
◆15VC		P14-2											228
		P3-6	72m			RED						X	
◆15VC		P14-5											229
		P3-5	72m			RED						X	
◆15VD		P20-2											230
		P3-1	64m			RED						X	
◆15VC		P12-2											231
		P3-2	64m			RED						X	
◆15VJ		P7-6											232
		P4-5	60m			RED						X	
◆15VS		P1-2											233
		P5-5											
◆15VA		P7-2											234
		P2-6	65m			RED						X	
◆15VA		P17-2											235
		P2-5	65.5m			RED						X	
◆15VH		P13-2											236
		P2-1	69m			RED						X	
◆15VC		P14-2											237
		P3-6	72m			RED						X	
◆15VC		P14-5											238
		P3-5	72m			RED						X	
◆15VD		P20-2											239
		P3-1	64m			RED						X	
◆15VC		P12-2											240
		P3-2	64m			RED						X	
◆15VJ		P7-6											241
		P4-5	60m			RED						X	
◆15VS		P1-2											242
		P5-5											
◆15VA		P7-2											243
		P2-6	65m			RED						X	
◆15VA		P17-2											244
		P2-5	65.5m			RED						X	
◆15VH		P13-2											245
		P2-1	69m			RED						X	
◆15VC		P14-2											246
		P3-6	72m			RED						X	
◆15VC		P14-5											247
		P3-5	72m			RED						X	
◆15VD		P20-2											248
		P3-1	64m			RED						X	
◆15VC		P12-2											249
		P3-2	64m			RED						X	
◆15VJ		P7-6											250
		P4-5	60m			RED						X	
◆15VS		P1-2											251
		P5-5											
◆15VA		P7-2											252
		P2-6	65m			RED						X	
◆15VA		P17-2											253
		P2-5	65.5m			RED						X	
◆15VH		P13-2											254
		P2-1	69m			RED						X	
◆15VC		P14-2											255
		P3-6	72m			RED						X	
◆15VC		P14-5											256
		P3-5	72m			RED						X	
◆15VD		P20-2											257
		P3-1	64m			RED						X	
◆15VC		P12-2											258
		P3-2	64m			RED						X	
◆15VJ		P7-6											259
		P4-5	60m			RED						X	
◆15VS		P1-2											260
		P5-5											
◆15VA		P7-2											261
		P2-6	65m			RED						X	
◆15VA		P17-2											262
		P2-5	65.5m			RED						X	
◆15VH		P13-2											263
		P2-1	69m			RED						X	
◆15VC		P14-2											264
		P3-6	72m			RED						X	
◆15VC		P14-5											265
		P3-5	72m			RED						X	
◆15VD		P20-2											266
		P3-1	64m			RED						X	
◆15VC		P12-2											267
		P3-2	64m			RED						X	
◆15VJ		P7-6											268
		P4-5	60m			RED						X	
◆15VS		P1-2											269
		P5-5											
◆15VA		P7-2											270
		P2-6	65m			RED						X	
◆15VA		P17-2											271
		P2-5	65.5m			RED						X	
◆15VH		P13-2											272
		P2-1	69m			RED						X	
◆15VC		P14-2											273
		P3-6	72m			RED						X	
◆15VC		P14-5											274
		P3-5	72m			RED						X	
◆15VD		P20-2											275
		P3-1	64m			RED						X	
◆15VC		P12-2											276
		P3-2	64m			RED						X	
◆15VJ		P7-6											277
		P4-5	60m			RED						X	
◆15VS		P1-2											278
		P5-5											
◆15VA		P7-2											279

RUN NAME	A/P	PIN LOCATION		BAY ORDER	@	DRAW RV	NG	Y	X	Z LEVEL	REMARKS	NEW RUN INDICATOR	RUN NUM
-15V3		P07-1	4"				BLU			#18AWG		X	37
-15V3		P45-1	2"				BLU			#18AWG			37
-15V3		P45-3											37
-15V4		P1-5										X	38
-15V4		P7-3	27.75"				BLU						38
-15V5		P3-1										X	39
-15V5		P5-5	14.5"				BLU						39
-15V6		P3-4										X	40
-15V6		P7-2	19.5"				BLU						40
-15VE1		P21-1										X	41
-15VE1		P36-13	64"				BLU						41
-15VP1		J45-1										X	42
-15VP1		P25-1	65"				BLU						42
-5VE1		P12-14										X	43
-5VE1		P40-3	62.75"				BRN						43
-5VM1		P26-3	72.5"				BRN					X	44
-5VM1		P6-4											44
AC L01		P14-8	70.5				YEL			#18AWG		X	45
AC L01		P3-7											45
AC L01'		P14-8										X	46
AC L01'		P22-10	47"				YEL			#18AWG			46
AC L02		P14-10					YEL			#18AWG		X	47
AC L02		P7-7	60.25"										47
AC L02'		P14-10										X	48
AC L02'		P22-8	46"				YEL			#18AWG			48
AC01		P16-1										X	49
AC01		P18-6	11"								RED-WHT TWP(AC2)		49
AC02		P16-2										X	50
AC02		P18-7	11"								WHT-RED TWP(AC1)		50
AC03		P16-7										X	51
AC03		P19-6	15.75"								RED-WHT TWP(AC4)		51
AC04		P16-8										X	52
AC04		P19-7	15.75"								WHT-RED TWP(AC3)		52
AC05		P15-1										X	53
AC05		P17-6	11.5"								RED-WHT TWP(AC6)		53
AC06		P15-2										X	54
AC06		P17-7	11.5"								WHT-RED TWP(AC5)		54

RUN NAME	A/P	PIN LOCATION		BAY ORDER	@	DRAW RV	NG	Y	X	Z LEVEL	REMARKS	NEW RUN INDICATOR	RUN NUM
AC07		P15-8										X	55
AC07		P20-6	66"								RED-WHT TWP(AC8)		55
AC08		P15-10										X	56
AC08		P20-7	66"								WHT-RED TWP(AC7)		56
AC09		P15-9										X	57
AC09		P21-6	23.5"								RED-WHT TWP(AC10)		57
AC10		P15-12										X	58
AC10		P21-8	23.5"								WHT-RED TWP(AC9)		58
AC11		P24-1										X	59
AC11		P29-6	27"								RED-WHT TWP(AC12)		59
AC12		P24-2										X	60
AC12		P29-7	27"								WHT-RED TWP(AC11)		60
AC13		P24-3										X	61
AC13		P30-7	27"								RED-WHT TWP(AC14)		61
AC14		P24-4										X	62
AC14		P30-8	27"								RED-WHT TWP(AC13)		62
AC15		P24-5										X	63
AC15		P26-7	10"								RED-WHT TWP(AC16)		63
AC16		P24-6										X	64
AC16		P26-8	10"								WHT-RED TWP(AC15)		64
AC17		P24-7										X	65
AC17		P31-6	17.5"								RED-WHT TWP(AC18)		65
AC18		P24-8										X	66
AC18		P31-7	17.5"								WHT-RED TWP(AC17)		66
AC19		P23-1										X	67
AC19		P27-6	21"								RED-WHT TWP(AC20)		67
AC20		P23-2										X	68
AC20		P27-7	21"								WHT-RED TWP(AC19)		68
AC21		P23-8										X	69
AC21		P28-6	17.5"								RED-WHT TWP(AC22)		69
AC22		P23-10										X	70
AC22		P28-7	17.5"								WHT-RED TWP(AC21)		70
AC23		P23-9										X	71
AC23		P25-6	4.5"								RED-WHT TWP(AC24)		71
AC24		P23-12										X	72
AC24		P25-8	9.5"								WHT-RED TWP(AC23)		72

RUN NAME	A/P	PIN LOCATION		BAY ORDER	@	DRAW RV	RG	Y	X	Z LEVEL	REMARKS	NEW RUN INDICATOR	RUN NUM
AC25		P13-1										X	73
AC25		P13-3	2.75"					RED			#18AWG		73
AC25'		P13-1										X	74
AC25'		P23-5	64.5"					RED			CABLE 9107761		74
AC26		P13-2										X	75
AC26		P23-6	64.5"					WHT			CABLE 9107761		75
AC26'		P13-2										X	76
AC26'		P13-4	2.75"					WHT			#18AWG		76
AC27		P15-5										X	77
AC27		P34	57"								RED-WHT TWP TO TIME MTK		77
AC28		P15-6										X	78
AC28		P35	57"								WHT-RED TWP TO TIME MTK		78
DC L01		P14-12	69.5"					VIO			#18AWG	X	79
DC L01		P3-8											79
DC L02		P22-9	71"					VIO			#18AWG	X	80
DC L02		P7-4											80
DC LOX		P22-12						VIO			#18AWG	X	81
DC LOX		P4-3	78.5"										81
DC LOY		P14-9										X	82
DC LOY		P6-1	64"					VIO					82
GND 01		P14-4										X	83
GND 01		P21-3	28.5"					BLK					83
GND 02		P14-5	73"					BLK				X	84
GND 02		P8-8											84
GND 03		P14-6										X	85
GND 03		P25-3	43.5"					BLK					85
GND 04		P10-5										X	86
GND 04		P22-3	74"					BLK					86
GND 05		P38	9"					BLK				X	87
GND 05		P9-6											87
GND 06		P11-7										X	88
GND 06		P39	9"					BLK					88
GND 09		P12-8	31.5"					BLK				X	89
GND 09		P9-3											89
GND 10		P11-8										X	90
GND 10		P36-8	25.5"					BLK					90

RUN NAME	A/P	PIN LOCATION		BAY ORDER	@	DRAW RV	RG	Y	X	Z LEVEL	REMARKS	NEW RUN INDICATOR	RUN NUM
GND 11		P1-2										X	91
GND 11		P10-3	24.5"					BLK					91
GND 12		P1-6										X	92
GND 12		P10-4	24.5"					BLK					92
GND 13		P41	9"					BLK				X	93
GND 13		P8-7											93
GND 14		P1-7	38					BLK				X	94
GND 14		P36-5											94
GND A1		P17-3	64.5"					BLK				X	95
GND A1		P8-2											95
GND A2		P17-4	66"					BLK				X	96
GND A2		P8-1											96
GND B1		P18-3	70.75"					BLK				X	97
GND B1		P8-4											97
GND B2		P18-4	71.5"					BLK				X	98
GND B2		P8-3											98
GND C1		P19-3	73.5"					BLK				X	99
GND C1		P8-6											99
GND C2		P19-4	73.5"					BLK				X	100
GND C2		P8-5											100
GND D1		P20-3	61"					BLK				X	101
GND D1		P36-7											101
GND D2		P12-7										X	102
GND D2		P20-4	61"					BLK					102
GND E1		P21-2										X	103
GND E1		P36-11	64"					BLK					103
GND E2		P12-5										X	104
GND E2		P40-2	63"								BLK-ORN TWP(#20AWG)		104
GND F1		P25-2	75.5"					BLK				X	105
GND F1		P9-4											105
GND H1		P11-1										X	106
GND H1		P31-3	74.5"					BLK					106
GND H2		P10-6										X	107
GND H2		P31-4	74"					BLK					107
GND H3		P11-2										X	108
GND H3		P26-2	73"					BLK					108

RUN NAME	A/P	PIN LOCATION	BAY ORDER	Ø	DRAW RV	RG Y	X	Z LEVEL	REMARKS	NEW RUN INDICATOR	RUN NUM
GND J1		P27-3 82.5"				BLK				X	109
GND J1		P9-2									109
GND J2		P27-4 82.5"				BLK				X	110
GND J2		P9-1									110
GND K1		P11-4								X	111
GND K1		P28-3 78"				BLK					111
GND K2		P11-3								X	112
GND K2		P28-4 78"				BLK					112
GND L1		P11-6								X	113
GND L1		P29-3 81"				BLK					113
GND L2		P11-5								X	114
GND L2		P29-4 81"				BLK					114
GND L3		P30-2								X	115
GND L3		P9-8 84"				BLK					115
LINE CLOCK		P14-11								X	116
LINE CLOCK		P37-2 58.5"				BRN		#18AWG			116
LINE CLOCK'		P2-7								X	117
LINE CLOCK'		P37-2 33"				BRN		#18AWG			117
LO GND D1		P10-1								X	118
LO GND D1		P14-7 66"				BLK		#18AWG			118
LO GND D2		P10-2								X	119
LO GND D2		P22-7 78"				BLK		#18AWG			119
LO GND D3		P37-1 30.5"				BLK		#18AWG		X	120
LO GND D3		P9-5									120
PWR CONT COM1		P1-3								X	121
PWR CONT COM1		P32-3 98.25"				BLK-WHT		TWP(P.C SW1)#18AWG			121
PWR CONT SW1		P1-4								X	122
PWR CONT SW1		P32-1 98.25"				WHT-BLK		TWP(P.C COM1)#18AWG			122
SHIELD		P23-4						CABLE 9107761		X	123
THERM 1		P13-6								X	124
THERM 1		P33-3 77.75"				BLK		#18AWG			124
THERM 2		P13-5								X	125
THERM 2		P33-2 77.75"				RED		#18AWG			125

WIRE TABLE									
ITEM NO.	DESCRIPTION		FROM			TO			
	AWG	COLOR	POINT	CONNECTION	TERM	POINT	CONNECTION	TERM	SIGNAL
5	14 TWP	RED	3	P3-10	SOLD	15	P1-1	3	+5V
		BLK	4	P3-8	SOLD	14	P1-7	3	GND
9	14	GRY	5	P3-4	SOLD	16	P1-2	3	+15V
6	14 TWP	BLK	1	P3-12	SOLD	13	P1-9	3	GND
		BLU	2	P3-11	SOLD	12	P1-13	3	-15V
8	18	BRN	8	P3-1	SOLD	11	P2-2	3	LTc
7	18 TWP	VIO	6	P3-3	SOLD	9	P2-3	3	DcLo
		YEL	7	P3-2	SOLD	10	P2-4	3	AcLo
11	22	-	-	P3-13	SOLD	-	P3-14	SOLD	DcLo
11	22	-	-	P3-15	SOLD	-	P3-16	SOLD	AcLo

NOTES:

1. USE TIE WRAPS (X) ITEM #4 APPROXIMATELY EVERY THREE (3) INCHES WHEN NECESSARY AND AT EVERY BREAKOUT POINT.
2. DOT (●) INDICATES NAIL LOCATIONS FOR ASSEMBLY USE ONLY, COVER NAILS WITH SHRINK TUBING TO PREVENT CUTTING HARNESS.
3. USE CONN BRKT C-MD-9305761-[illegible] MOUNT WITH WOOD SCREWS. USE MATING CONN 1209350-3
4. USE CONN BRKT C-MD-9305761-H6-0 MOUNT WITH WOOD SCREWS. USE MATING CONN 1209350-06
5. USE CONN. HOLD DOWN B-MD-9305767-0-0 WITH PLATE B-MD-9305767-0-1, USE TAPE DEC #9008734 & CONN HBØ7 DEC# (1209123) REMOVE PINS & FLANGES AS SHOWN IN DETAIL "A". MOUNT WITH WOOD SCREWS.

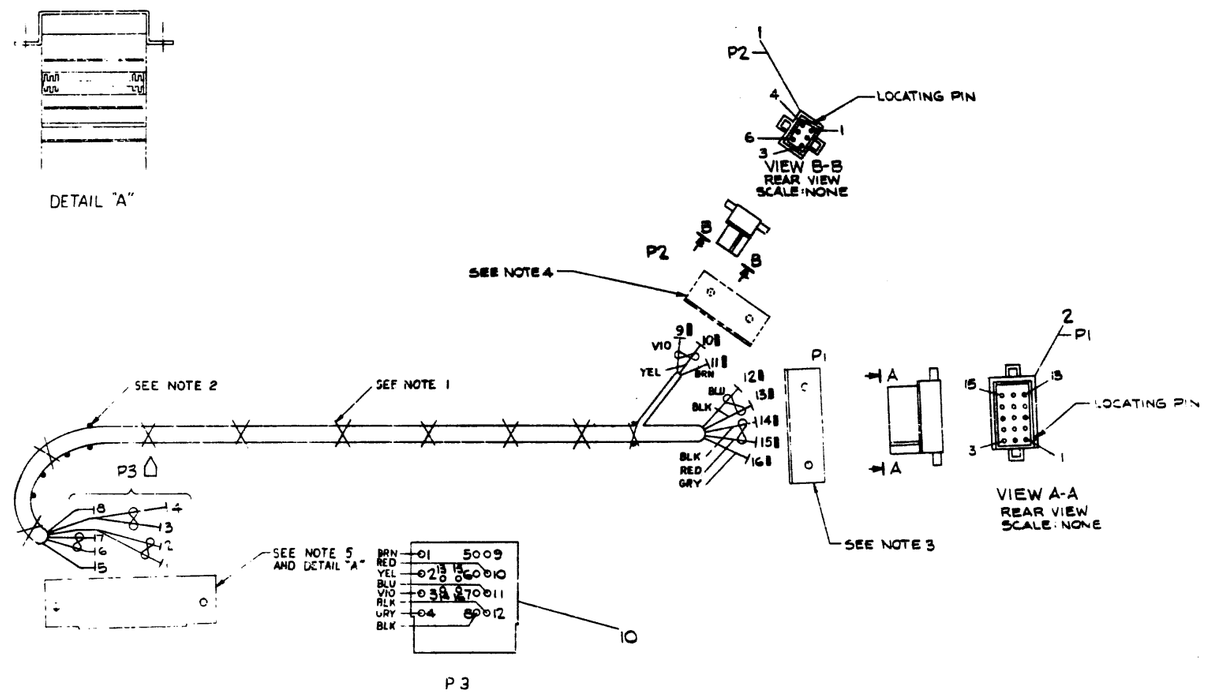

SYM	QTY.	DESCRIPTION	PART NO.	ITEM NO.
	A/R	BUSS WIRE #22 AWG	9107560-01	11
	1	POWER CONN	G772	10
	A/R	WIRE #14 AWG GRY	9107370-85	9
	A/R	WIRE #18 AWG BRN	9107360-11	8
	A/R	WIRE #18 TWP YEL/VIO	9107430-47	7
	A/R	WIRE #14 TWP BLK/BLU	9107440-06	6
	A/R	WIRE #14 TWP BLK/RED	9107440-02	5
X	A/R	WRAP TIE	9007031	4
B	8	PIN, MALE	1209378-00	3
	1	HOUSING, CONN. 15 PIN	1209351-15	2
	1	HOUSING, CONN. 6 PIN	1209351-06	1

PARTS LIST

EQUIPMENT CORPORATION

TITLE: G772 SYSTEM UNIT HARNESS

MATERIAL: SEE PARTS LIST

SCALE: 1/1

E 1A 7009562-0-0

13,-

digital EQUIPMENT CORPORATION

DRAWING DIRECTORY

"THIS DRAWING AND SPECIFICATIONS, HEREIN, ARE THE PROPERTY OF DIGITAL EQUIPMENT CORPORATION AND SHALL NOT BE REPRODUCED OR COPIED OR USED IN WHOLE OR IN PART AS THE BASIS FOR THE MANUFACTURE OR SALE OF ITEMS WITHOUT WRITTEN PERMISSION. COPYRIGHT © , DIGITAL EQUIPMENT CORPORATION"

CUSTOMER PRINT SET INDEX

SEQUENCE	
DRAWING DIRECTORY	B-DD-861-0
POWER CONTROL, 861	E-UA-861-0-0
PILOT CONTROL	D-CS-5411522-0-1
CIRCUIT SCHEMATIC 861	D-CS-861-A-1
CIRCUIT SCHEMATIC 861	D-CS-861-B-1
CIRCUIT SCHEMATIC 861	D-CS-861-C-1
PACKAGING INSTRUCTION	A-PI-3700083-0-0
CIRCUIT SCHEMATIC 861	D-CS-861-F-1

THIS IS PRINT SET ☐☐☐☐

UNIT VARIATIONS		PRINT SET
VAR	TITLE	
861-A	POWER CONTROL, 861-A	
861-B	POWER CONTROL, 861-B	
861-C	POWER CONTROL, 861-C	
861-F	POWER CONTROL, 861-F	

REVISIONS		
DATE	CHG. NO.	REV
2/73	861-3	A
8/74	861-4	B
12-74	861-6	C
4-75	861-7	D
7-75	861-8	E
2-76	861-9	F
4-76	861-10	H
8-76	861-11	J
9-76	861-12	K

USED ON OPTION/MODEL	
SHEET 1 OF 3	

DRN. SCHMIDT	DATE 9/13/72	TITLE 861 POWER CONTROL
CHK'D. B. ALLEN	DATE 9/13/72	
PROJ ENG. JIM KALAGHER	DATE 9/13/72	
PROD. Fazio Paul	DATE 9/25/72	SIZE B / CODE DD / NUMBER 861-0 / REV K
FIELD SERV. Paton Irving	DATE 9/25/72	DIST

DEC 16-12591-1062-14-8972

DRB 106

136

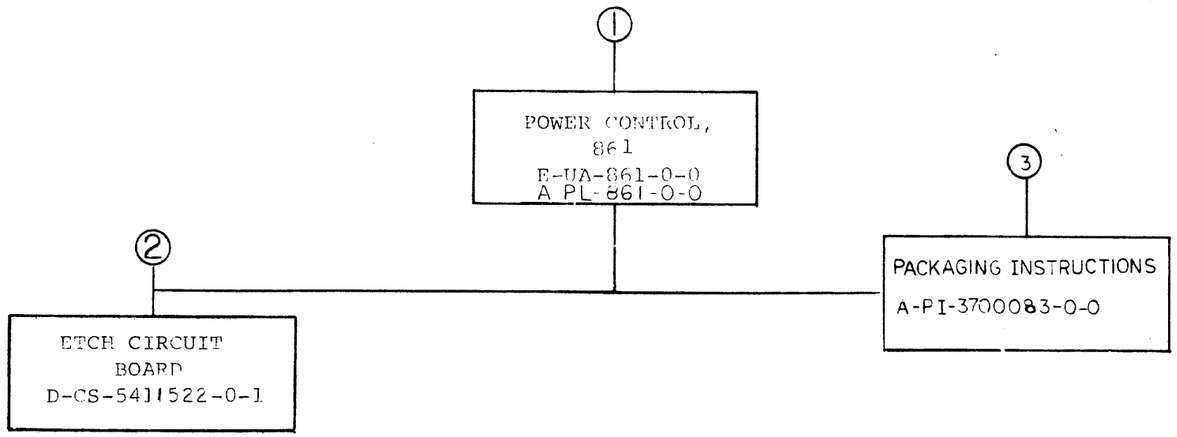

TITLE		SIZE	CODE	NUMBER	REV
POWER CONTROL	SHEET 2 OF 3	B	DD	861-0	K

DRB 107
DEC 16—(325)—1062-3—N871

ELECTRICAL

CUSTOMER PRINT SET 861-1	MFG. SET	FIND NO.	DRAWING NO.	REV	NO OF SHT	DESCRIPTION	OPTION NO./FILE DATE
X		1	D-CS-861-A-1	E	1	CIRCUIT SCHEMATIC, 861 P.C.	
X			D-CS-861-B-1	E	1	CIRCUIT SCHEMATIC, 861 P.C.	
X			D-CS-861-C-1	E	1	CIRCUIT SCHEMATIC, 861 P.C.	
			A-SP-861-0-1		2	TEST AND INSPECTION PRO.	
X			D-CS-861-F-1	D	1	CIRCUIT SCHEMATIC, 861 P.C.	
X		2	D-CS-5411522-0-1	A	1	PILOT CONTROL	
			PC-5011522			ETCH CIRCUIT BOARD	
			K-CO-5411522-0-4			X Y COORDINATE HOLE LOCATION	
			D-AH-5411522-0-5			ASSY DRILLING HOLE LAYOUT	
			B-MH-5411522-0-6			MODULE ECO HISTORY	

MECHANICAL

CUSTOMER PRINT SET 861-1	MFG SET	FIND NO.	DRAWING NO.	REV	NO OF SHT	DESCRIPTION	OPTION NO./FILE DATE
X		1	E-UA-861-0-0	K	2	POWER CONTROL, 861	
			E-IA-7410567-0-0	C	1	CHASSIS, 861 PC	
			D-IA-7410568-0-0	C	2	COVER, 861 P.C.	
			A-PS-3611216-0-0			NAME PLATE 861-A	
			C-SS-3611216-0-1		1	NAME PLATE 861-A ARTWORK	
			A-PS-3611217-0-0			NAME PLATE 861-B	
			C-SS-3611217-0-1		1	NAME PLATE 861-B ARTWORK	
			A-PS-3611218-0-0			NAME PLATE 861-C	
			C-SS-3611218-0-1		1	NAME PLATE 861-C ARTWORK	
			A-PS-3612382-0-0			NAME PLATE 861-F	
			C-SS-3612382-0-1		1	NAME PLATE 861-F ARTWORK	
			A-PL-861-0-0	J	4	POWER CONTROL, 861	
		3	A-PI-3700085-0-0		2	PACKAGING INSTRUCTIONS	
			A-PS-9905229-0-0		2	FULL OVER LAP CARTON	
			A-PS-9905228-0-0		2	EXPANDER POLYSTYRENE FOAM INSERT	

CUSTOMER PRINT SET CODES	
	X = PRINT OF DOCUMENT INCLUDED IN PRINT SET
	C = INCLUDES ALL PRINTS INDICATED ON DOCUMENT
	S = CONFIDENTIAL AUTHORIZED SIGNATURE REQUIRED

TITLE		SIZE	CODE	NUMBER	REV
POWER CONTROL, 861	SHEET 3 OF 3	B	DD	861-0	K

138

DRB 108

DEC 16-(325)-1062-2B-RG72

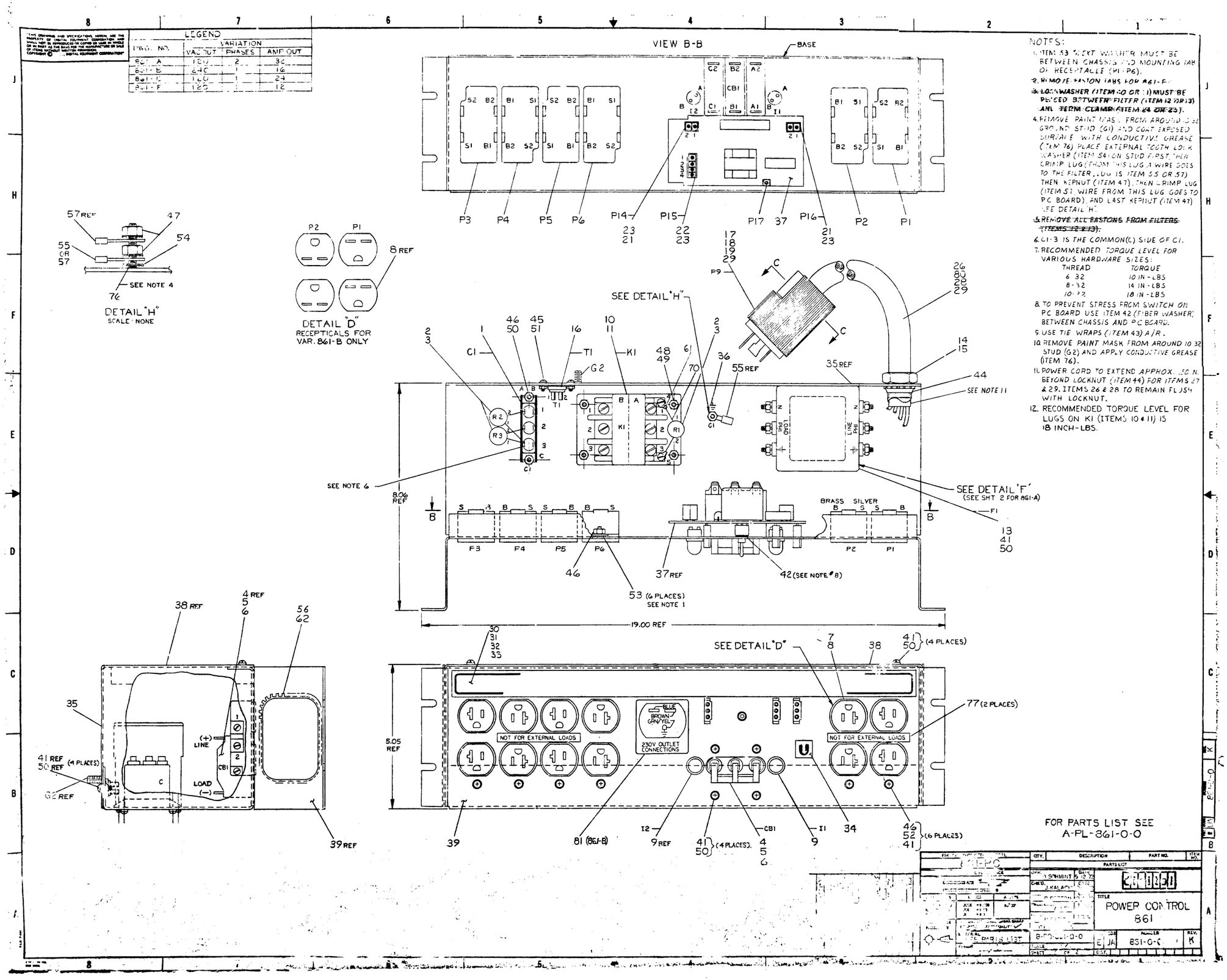

NOTES:

1. ITEM 53 % EXT WASHER MUST BE BETWEEN CHASSIS AND MOUNTING TAB OF RECEPTACLE (P1-P6).
2. REMOVE FASTON TABS FOR 861-F.
3. ~~LOCKWASHER (ITEM 40 OR 41) MUST BE PLACED BETWEEN FILTER (ITEM 12 OR 13) AND TERM CLAMP (ITEM 24 OR 25).~~
4. REMOVE PAINT MASK FROM AROUND 10-32 GROUND STUD (G1) AND COAT EXPOSED SURFACE WITH CONDUCTIVE GREASE (ITEM 76). PLACE EXTERNAL TOOTH LOCK WASHER (ITEM 54) ON STUD FIRST, THEN CRIMP LUG (FROM THIS LUG A WIRE GOES TO THE FILTER, LUG IS ITEM 55 OR 57) THEN KEPNUT (ITEM 47), THEN CRIMP LUG (ITEM 57, WIRE FROM THIS LUG GOES TO P.C. BOARD), AND LAST KEPNUT (ITEM 47) SEE DETAIL "H".
5. ~~REMOVE ALL FASTONS FROM FILTERS (ITEMS 12 & 13).~~
6. C1-3 IS THE COMMON (C) SIDE OF C1.
7. RECOMMENDED TORQUE LEVEL FOR VARIOUS HARDWARE SIZES:

THREAD	TORQUE
6-32	10 IN-LBS
8-32	14 IN-LBS
10-32	18 IN-LBS

8. TO PREVENT STRESS FROM SWITCH ON P.C. BOARD USE ITEM 42 (FIBER WASHER) BETWEEN CHASSIS AND P.C. BOARD.
9. USE TIE WRAPS (ITEM 43) A/R.
10. REMOVE PAINT MASK FROM AROUND 10-32 STUD (G2) AND APPLY CONDUCTIVE GREASE (ITEM 76).
11. POWER CORD TO EXTEND APPROX. 1.50 IN. BEYOND LOCKNUT (ITEM 44) FOR ITEMS 27 & 29. ITEMS 26 & 28 TO REMAIN FLUSH WITH LOCKNUT.
12. RECOMMENDED TORQUE LEVEL FOR LUGS ON K1 (ITEMS 10 & 11) IS 18 INCH-LBS.

FOR PARTS LIST SEE A-PL-861-0-0

POWER CONTROL 861

DRAWN D. SCHMINT 5-12-72
CHKD. J. KALACH
PARTS LIST
B-PL-861-0-0
E JA 861-0-0 REV. K

"THIS DRAWING AND SPECIFICATIONS, HEREIN, ARE THE PROPERTY OF DIGITAL EQUIPMENT CORPORATION AND SHALL NOT BE REPRODUCED OR COPIED OR USED IN WHOLE OR IN PART AS THE BASIS FOR MANUFACTURE OR SALE OF ITEMS WITHOUT WRITTEN PERMISSION.
COPYRIGHT © 1970 DIGITAL EQUIPMENT CORPORATION"

WIRE TABLE, 861-A

ITEM NO	DESCRIPTION AWG	COLOR	FROM CONN	FROM POINT	FROM WITH	TO CONN	TO POINT	TO WITH	REMARKS
1	—	—	R1-1		—	K1-4		70,61	1. IN
2	—	—	R1-2		—	K1-5		70,61	1. IN
73	14	BLU	K1-B1		*	P6-S2		60	6 IN
					*	P4-S2		60	4.25 IN
			K1-B3		*	C1-3B		63	3.5 IN
					60	P5-S2		60	4.5 IN
73		BLU	P4-S1		60	P3-S1		60	4.5 IN
72		BRN	K1-B2		*	C1-2B		63	3.5 IN
72		BRN			*	P6-B1		60	6 IN
72		BRN	P5-B2		60	P5-B2		60	3 IN
71		BLK	K1-B1		*	C1-1B		63	3.5 IN
71		BLK			*	P4-B1		60	6 IN
71		BLU	P4-B2		60	P3-B2		60	3 IN
73	14	BLU	CB1-C2		55	P1-S1		60	3 IN
66	12					K1-A3		*	3.5 IN
73	14		K1-A3		*	P15-2		23,22	3.75 IN
73	14	BLU	P16-2		23,21	K1-A3		*	6.5 IN
65	12	BRN	CB1-B2		55	K1-A2		*	6.75 IN
72	14	BRN				P1-B1		60	10.5 IN
64	12	BLK	CB1-A2		55	K1-A1		*	7.5 IN
71	14	BLK				P2-B1		60	6. IN
71		BLK	K1-A1		*	P15-3		23,22	5.5 IN
72		BRN	K1-A2		*	K1-4		63	3. IN
72		BRN	P16-1		23,21	K1-5		63	7.5 IN
73	14	BLU	P1-S2		60	P2-S1		60	3. IN
66	12	BLU	CB1-C1		55	F1-N	LOAD	55	5.5 IN
9	—	RED	I1-A		—	CB1-C1		57	5.75 IN
9	—	RED	I2-A		—				4. IN
9	—	BLK	I1-B		—	CB1-A1		58	3.75 IN
64	12	BLK	F1-PH1	LOAD	55	CB1-A1		55	3. IN
9	—	BLK	I2-B		—	CB1-B1		58	4.75 IN
65	12	BRN	F1-PH2	LOAD	55	CB1-B1		55	5.25 IN
74	14	ORN	P14-1		23,21	T1-1		63	10. IN
74	14	ORN	P14-2		23,21	T1-2		63	10. IN
6	12	GRN/YEL	F1-⏚	LOAD	55	G1	SEE DETAIL H	55	4.75 IN
67	14	GRN/YEL	P17		SOLD	G1		57	7.75 IN
2	—	—	R2-1		70	C1-3A		59	1. IN
3	—	—	R3-1						
			R2-2			C1-1A		59	1.25 IN
2	—	—	R3-2		70	C1-2A		59	1. IN
26	12	BLK	P9-Y		17	F1-PH1	LINE	55	15. FT.
		WHT	P9-S			F1-N	LINE	55	
		RED	P9-X			F1-PH2	LINE	55	
26	17	GRN	P9-G		17	F1-⏚	LINE	55	15. FT

* STRIP WIRE .38 IN

WIRE TABLE, 861-B

ITEM NO	DESCRIPTION AWG	COLOR	FROM CONN	FROM POINT	FROM WITH	TO CONN	TO POINT	TO WITH	REMARKS
1	—	—	R1-1		—	K1-4		70,61	1. IN
2	—	—	R1-2		—	K1-5		70,61	1. IN
73	14	BLU	K1-B3		*	P6-S1		60	4 IN
					*	P4-S1		60	4. IN
			K1-B3		*	C1-3B		63	3.5 IN
					60	P5-S1		60	4.5 IN
73		BLU	P4-S2		60	P3-S1		60	4.5 IN
72		BRN	K1-B1		*	P6-B1		60	5.5 IN
					*	P4-B1		60	5.5 IN
			K1-B1		*	C1-1B		63	3.5 IN
			P6-B2		60	P5-B1		60	3. IN
			P4-B2		60	P3-B1		60	3. IN
			K1-A1		*	K1-4		63	3.25 IN
			K1-A1		*	P15-4		23,22	6. IN
			CB1-A2		55	P1-B2		60	10. IN
72		BRN				K1-A1		*	7.5 IN
73		BLU	CB1-C2		55	K1-A3		*	5.5 IN
						F1-S2		60	8. IN
			K1-A3		*	P16-2		23,21	6. IN
			K1-A3		*	P15-2		23,22	4. IN
73		BLU	P1-S1		60	P2-S2		60	3. IN
72	14	BRN	P1-B1		60	P2-B2		60	4.5 IN
9	—	BLK	I1-B		—	CB1-B2		57	4. IN
		BLK	I2-B		—				4. IN
		RED	I1-A		—	CB1-A1		58	5. IN
9	—	RED	I2-A		—	CB1-C1		58	5. IN
72	14	BRN	CB1-A1		57	F1-PH1	LOAD	57	3. IN
73		BLU	CB1-C1		57	F1-N	LOAD	57	4.75 IN
74		ORN	P14-1		23,21	T1-1		63	10. IN
74		ORN	P14-2		23,21	T1-2		63	10. IN
67		GRN/YEL	F1-⏚		57	G1	SEE DETAIL "H"	57	7.75 IN
67	14	GRN/YEL	P17		SOLD	G1		57	7.75 IN
3	—	—	R2-1		70	C1-3A		59	1. IN
			R2-2		70	C1-1A		59	1. IN
72	14	BRN	P16-1		23,21	K1-5		63	7. IN
80		GRN/YEL	P9-G		18	F1-⏚	LINE	57	15. FT
80		BRN	P9-X		18	F1-PH1	LINE	57	15. FT
80	14	BLU	P9-Y		18	F1-N	LINE	57	15. FT

WIRE TABLE 861-C

ITEM NO	DESCRIPTION AWG	COLOR	FROM CONN	FROM POINT	FROM WITH	TO CONN	TO POINT	TO WITH	REMARKS
1	—	—	R1-1		—	K1-4		70,61	1. IN
2	—	—	R1-2		—	K1-5		70,61	1. IN
73	14	BLU	K1-B3		*	P6-S1		60	4 IN
		BLU			*	P4-S1		60	4.25 IN
			K1-B3		*	C1-3B		63	3.5 IN
72		BRN				P6-B1		60	6 IN
		BRN	K1-B2			P5-B2		60	4.5 IN
71		BLK	K1-B1		*	P4-B1		60	6.25 IN
		BLK			*	P3-B2		60	6.25 IN
73		BLU	P4-S2		60	P5-S1		60	4.5 IN
73		BLU	P3-S1		60	P4-S2		60	4.5 IN
73		BLU	K1-B3		*	C1-3B		63	3.5 IN
72		BRN	K1-B2		*	C1-2B		63	3.5 IN
71		BLK	K1-B1		*	C1-1B		63	3.5 IN
72		BRN	CB1-B2		55	K1-A2		*	4.75 IN
		BRN				K1-A2		*	3.25 IN
72		BRN	K1-4		63	K1-A2		*	6.5 IN
71		BLK	CB1-C2		55	P2-B1		60	8.25 IN
		BLK				K1-A1		*	5.75 IN
71		BLK	K1-A1		*	P15-3		23,22	5.5 IN
73		BLU	CB1-A2		55	F1-S2		60	7.5 IN
						K1-A3		*	6. IN
			P1-S1		60	P2-S2		60	3.0 IN
			P15-2		23,21	K1-A3		*	3.75 IN
73		BLU	P16-2			K1-A3		*	6.5 IN
72		BRN	P16-1			K1-5		63	6.75 IN
74	14	ORN	P14-1			T1-1		63	10. IN
74	14	ORN	P14-2		23,21	T1-2		63	10. IN
2	—	—	R2-1		70	C1-3A		59	1. IN
			R3-1						
			R2-2			C1-1A		59	1.25 IN
2	—	—	R3-2		70	C1-2A		59	1. IN
68	12	GRN/YEL	F1-⏚	LOAD	55	G1	SEE DETAIL "H"	55	4.75 IN
67	14	GRN/YEL	P17		SOLDER	G1		57	7.75 IN
65	12	BRN	CB1-B1		55	F1-PH1	LOAD	55	3. IN
64	12	BLK	CB1-C1		55	F1-PH1	LOAD	55	3.25 IN
9	—	RED	I1-A			CB1-B1		57	4.25 IN
	—	RED	I2-A						4.75 IN
	—	BLK	I1-B			CB1-A1		57	3.00 IN
9	—	BLK	I2-B						5.75 IN
66	12	BLU	CB1-A1		55	F1-N	LOAD	55	4.5 IN
28		GRN	P9-G		19	F1-⏚	LINE	55	15. FT
28		BLK	P9-B		19	F1-PH1	LINE	55	15. FT
28	12	WHT	P9-S		19	F1-N	LINE	55	15. FT

WIRE TABLE 861-F

ITEM NO	DESCRIPTION AWG	COLOR	FROM CONN	FROM POINT	FROM WITH	TO CONN	TO POINT	TO WITH	REMARKS
2	—	—	R1-1		—	K1-4		70,61	1. IN
	—	—	R1-2		—	K1-5		70,61	1. IN
73	14	BLU	K1-B3		*	P6-S1		60	5.25 IN
73		BLU				P4-S1			4. IN
72		BRN	K1-B2			P6-B1			5.25 IN
72		BRN				P5-B2			5.25 IN
71		BLK	K1-B1			P4-B1			6.25 IN
71		BLK				P3-B2		60	6.25 IN
73		BLU	K1-B3			C1-3B		63	3.5 IN
72		BRN	K1-B2			C1-2B		63	3.5 IN
71	14	BLK	K1-B1		*	C1-1B		63	3.5 IN
2	—	—	R2-2		70	C1-1A		59	1. IN
	—	—	R3-1			C1-3A		59	1. IN
2	—	—	R3-1						1. IN
	—	—	R3-2		70	C1-2A		59	1.25 IN
73	14	BLU	K1-A3		*	P15-2		23,22	4.25 IN
			K1-A3		*	P16-2		23,21	5.75 IN
						K1-A3		*	6.75 IN
73		BLU	CB1-A2		55	P1-S2		60	8.IN
72		BRN	K1-A2		*	K1-4		63	3.75 IN
			CB1-B2		55	K1-A2		*	6.5 IN
						P1-B2		60	8.25 IN
72		BRN	K1-5		63	P16-1		23,21	6.75 IN
71		BLK	K1-A1		*	P15-3		23,22	6.IN
71		BLK	CB1-C2		55	P2-B1		60	8.IN
71		BLK				K1-A1		*	7. IN
73	14	BLU	P1-S1		60	P2-S2		60	3. IN
9	—	BLK	I1-B		—	CB1-B1		57	4.5 IN
	—	BLK	I2-B		—				4.5 IN
	—	RED	I1-A		—	CB1-A1		57	3.5 IN
9	—	RED	I2-A		—				4.5 IN
73	14	BLU	CB1-A1		57	F1-N	LOAD	57	4.5 IN
71		BLK	CB1-C1		57	CB1-B1		55	3.IN
71		BLK	F1-PH1	LOAD		CB1-B1			6.5 IN
67		GRN/YEL	F1-⏚	LOAD	57	G1	SEE DETAIL H	57	4.75 IN
67		GRN/YEL	P17		SOLD	G1		57	7.75 IN
74		ORN	P14-1		23,21	T1-1		63	10. IN
74		ORN	P14-2		23,21	T1-2		63	10. IN
73		BLU	P3-S1		60	[illegible]2		60	4.5 IN
73	14	BLU	P5-S1		60	[illegible]2		60	4.5 IN
69	16	GRN	P9-G		—	[illegible]	LINE	—	9.FT
57	16	BLK	P9-X		—	[illegible]	LINE	57	9.FT
57	16	WHT	P9-Y		—	[illegible]-1	LINE	57	9.FT

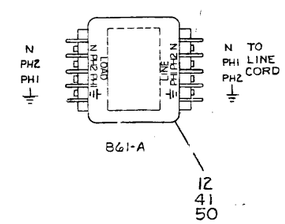

DETAIL "F"
SCALE: NONE

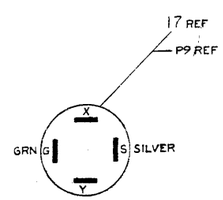

SECTION C-C
861-A
SCALE: NONE

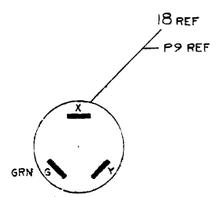

SECTION C-C
861-B
SCALE: NONE

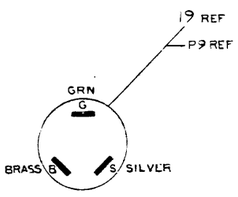

SECTION C-C
861-C
SCALE: NONE

REAR VIEW

140

POWER CONTROL, 861	SIZE	861-0-0	REV	K	

"THIS DRAWING AND SPECIFICATIONS, HEREIN, ARE THE PROPERTY OF DIGITAL EQUIPMENT CORPORATION AND SHALL NOT BE REPRODUCED OR COPIED OR USED IN WHOLE OR IN PART AS THE BASIS FOR THE MANUFACTURE OR SALE OF ITEMS WITHOUT WRITTEN PERMISSION. COPYRIGHT © 1975, DIGITAL EQUIPMENT CORPORATION"

NOTES:

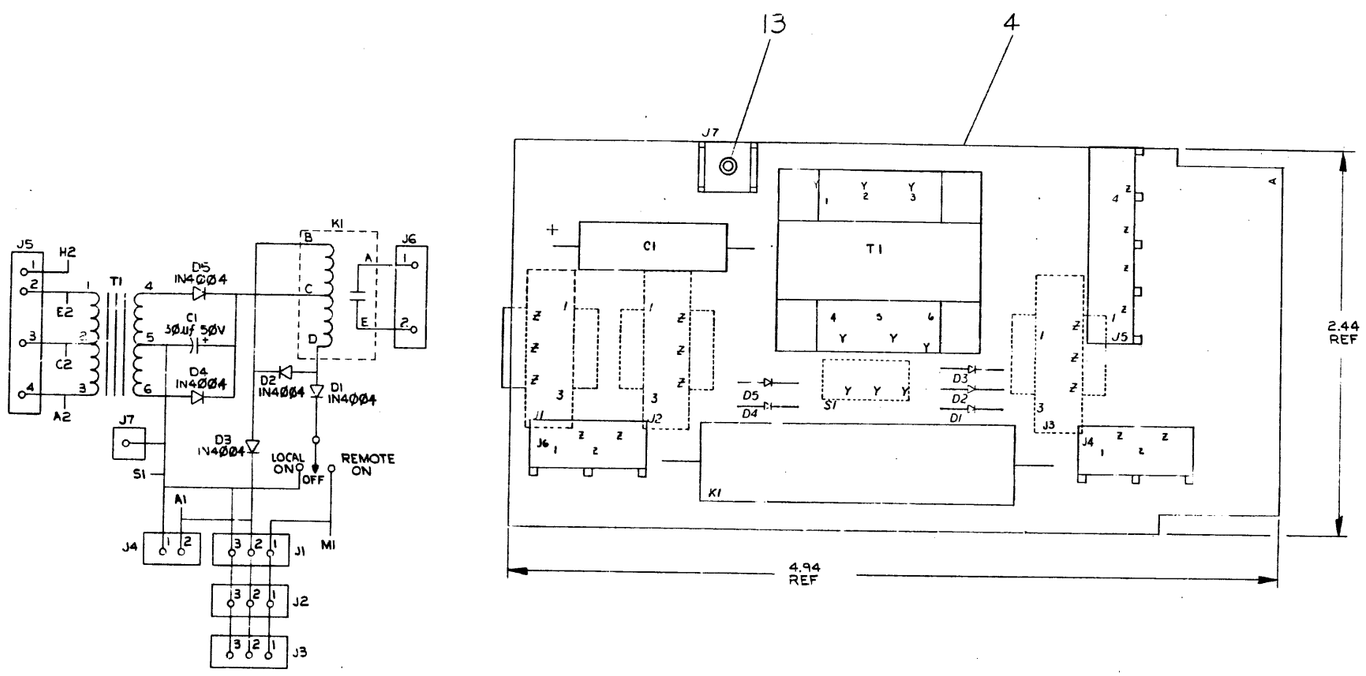

QTY	REF DESIGNATION	DESCRIPTION	PART NO	ITEM NO
REF		X-Y COORDINATE HOLE LOCATION	K-CO-5411522-0-4	1
REF		ASSY/DRILLING HOLE LAYOUT	D-AH-5411522-0-5	2
REF		MODULE ECO HISTORY	B-MH-5411522-0-6	3
1		ETCHED CIRCUIT BOARD	501152	4
1	K1	RELAY, REED, 48 V COIL, 2.5 A CONT.	1212267-00	5
1	T1	TRANSFORMER MMC 5415	1612342-00	6
1	C1	CAP 50 MFD 50V TANT	1000080-00	7
5	D1-D5	DIODE IN4004	1105796-00	8
1	S1	SWITCH	1211180-00	9
3	J1-J3	HOUSING, SOCKET	1209350-03	10
1	J5	CONN, UNIVERSAL, 4 PIN HEADER	1212297-01	11
2	J4, J6	CONN, UNIVERSAL, 2 PIN HEADER	1212297-00	12
1		EYELET	9006732-00	13
9		TERMINAL, SOCKET CONTACT	1209456-01	14
1	J7	TERMINAL, SOLDERLESS	9007113-00	15

PARTS LIST

IC TYPE	GND	+ 5V

GND AND 5V ARE USUALLY PIN 7 AND 14 RESPECTIVELY. EXCEPTIONS ARE STATED ABOVE

IC PIN LOCATIONS

FIRST USED ON OPTION MODEL: 861-D / 861-E

ETCH BOARD REV: B

REVISIONS: REV | CHANGE NO | CHK

DEC NO.	EIA NO.	DEC NO.	EIA NO.

SEMICONDUCTOR CONVERSION CHART

DRN: R.E. [signature] DATE: 2/4/75
CHK'D: W.F. [signature] DATE: 2/11/75
ENG: [signature] DATE: 2/14/75
PROJ. ENG: [signature] DATE: 2/14/75
PROD: [signature] DATE: 2/19/75

NEXT HIGHER ASSY: E-UA-861-D-Ø

SCALE: NONE
SHEET 1 OF 1

digital EQUIPMENT CORPORATION
MAYNARD, MASSACHUSETTS

TITLE: PILOT CONTROL

SIZE: D | CODE: CS | NUMBER: 5411522-0-1 | REV.: A

DIST.

D CS 5411522-0-1 A

147

This drawing and specifications, herein, are the property of Tutal Equipment Corporation and shall not be reproduced or copied or used in whole or in part as the basis for the manufacture or sale of items without written permission

NOTE :
1. R1,R2, + R3 ARE MOV VARISTOR SPIKE SURPRESSORS.

LINE
FILTER
F1
LOAD
RED
WHT
PH2
N
BLU
CB1
20A
K1
C1
I1
I2
P1
P2
C .1UF
C .1UF
R2
R3
PH2
BRN
PH1
BLK
NEMA
L14-20P
S
Y
X
P9
G
BLK
120 VAC 2 PHASE
INPUT
GRN
GRN/YEL
COIL
R1
P16
J6
PILOT
CONTROL
BOARD
5411522
D5
50 UF
D4
D2
D3
D1
P15
J5
P17
J7
LOCAL
ON
OFF
REMOTE
ON
T1
P14
J4
J1
J2
J3
P5
P6
P3
P4

REV	DESCRIPTION	DATE	APPROVED
A			
B			
C			
D			

ITEM	QTY.	DESCRIPTION	PART NO.

TOTAL EQUIPMENT CORPORATION

CIRCUIT SCHEMATIC

142

This drawing and specifications, herein, are the property of Digital Equipment Corporation and shall not be reproduced or copied or used in whole or in part as the basis for the manufacture or sale of items without written permission.

NOTE :
1. R1 - R2 ARE MOV VARISTOR SPIKE SURPRESSORS.

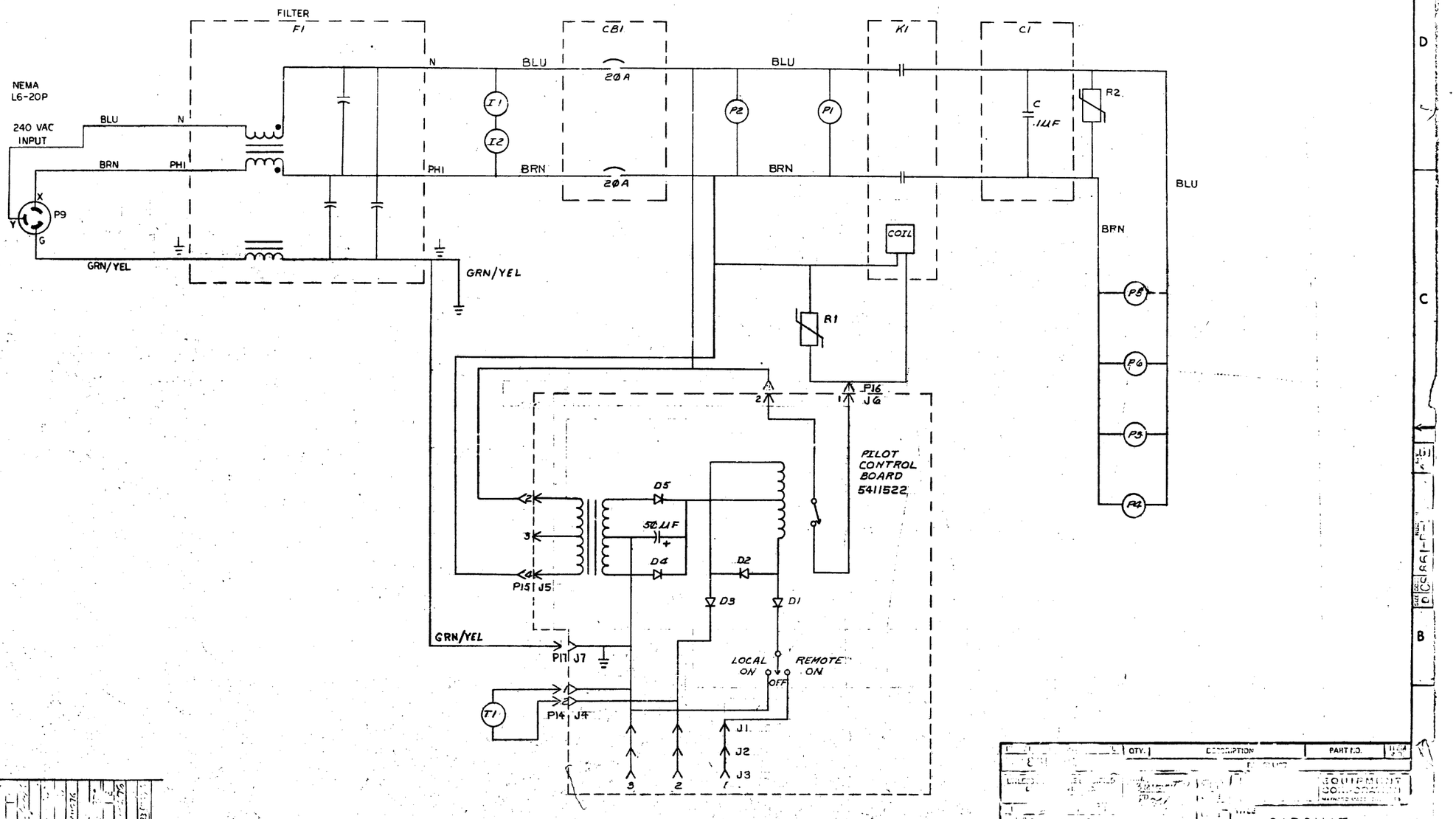

QTY.	DESCRIPTION	PART I.D.

CIRCUIT
SCHEMATIC
(G81-B PCA)

143

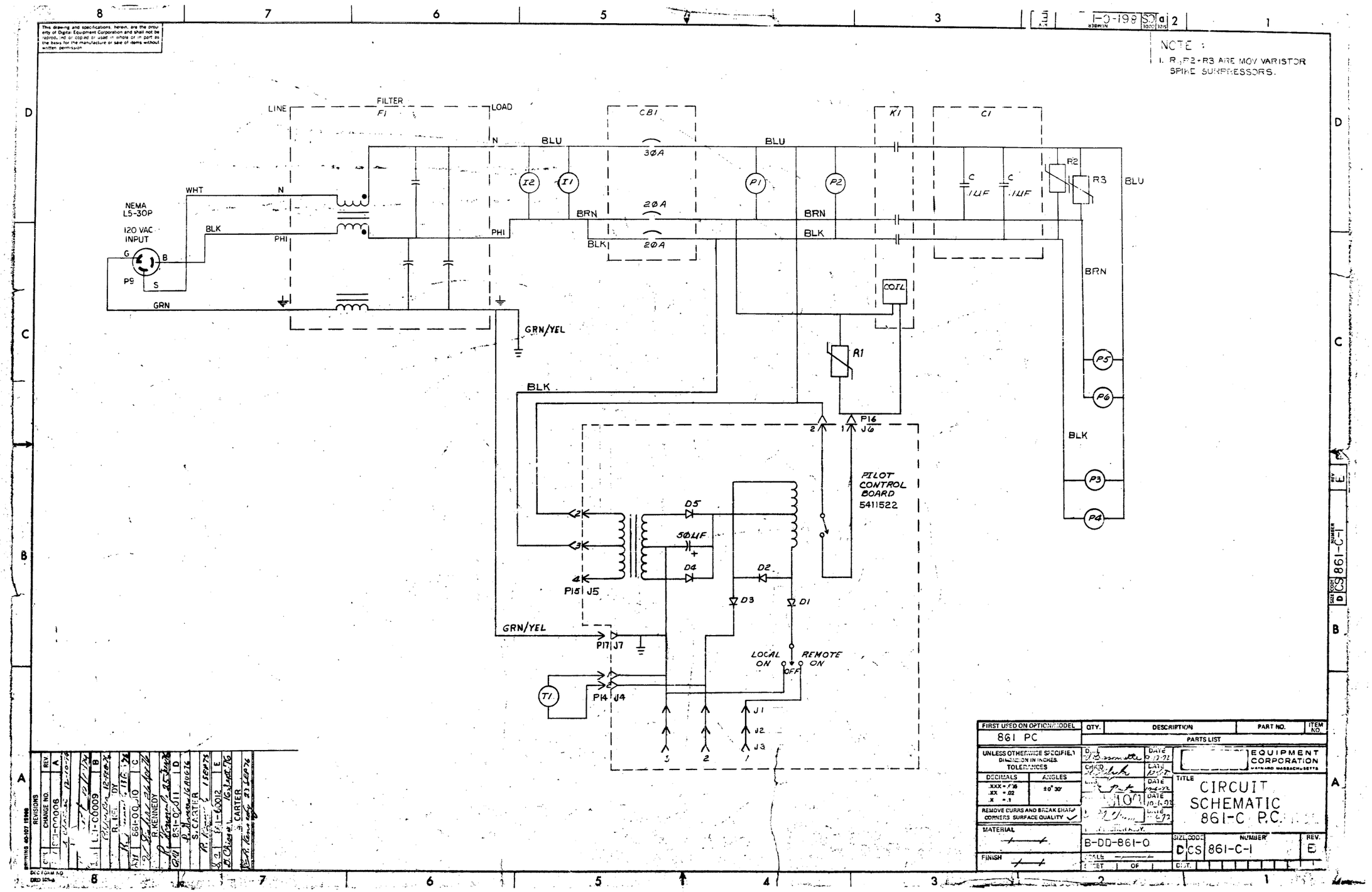

FIRST USED ON OPTION/MODEL	QTY.	DESCRIPTION	PART NO.	ITEM NO.
861 PC		PARTS LIST		

UNLESS OTHERWISE SPECIFIED DIMENSION IN INCHES. TOLERANCES

DECIMALS	ANGLES
.XXX = .005	±0° 30'
.XX = .02	
.X = .1	

REMOVE BURRS AND BREAK SHARP CORNERS SURFACE QUALITY ✓

MATERIAL

FINISH

DRAWN: DATE 9-12-72

CHKD: DATE 10-6-72

DATE 10-6-72

DATE 10-6-72

DATE 10-6-72

B-DD-861-0

SCALE

SHEET OF

EQUIPMENT CORPORATION
MAYNARD MASSACHUSETTS

TITLE
CIRCUIT SCHEMATIC 861-C P.C.

SIZE D | CODE CS | NUMBER 861-C-1 | REV. E

DIST.

REVISIONS

REV	CHANGE NO.	
A	861-00006	12-10-72
B	861-00009	12-FEB-72
C	861-00010	12-Apr-72
D	861-00011	16 AUG 72
E	861-00012	16 Sept 72

R. KENNEDY
S. CARTER
B. Chiappa
B. R. Kennedy 23 SEP 72

144

This drawing and specifications, herein, are the property of Digital Equipment Corporation and shall not be reproduced or copied or used in whole or in part as the basis for the manufacture or sale of items without written permission.

DIGITAL EQUIPMENT CORPORATION
MAYNARD MASSACHUSETTS

PACKAGING INSTRUCTION | REV: A | DATE: 4-73

TITLE 861 POWER CONTROL, INTERPLANT PACKAGE

MATERIAL REQUIREMENTS

Quantity	Identification No.	Purchase Spec	Description
1	7-2008 1314 0500-0	9905229	Full overlap carton
2		9905228	Expanded polystyrene foam insert
A/R			3-inch wide Glasflex tape

PACKAGING INSTRUCTIONS

Step	Procedure
1	Set up the full over lap carton (9905229) using one strip of tape across the bottom and extending up the sides approximately three inches. See Figure 1.
2	Place one expanded polystyrene foam insert (9905228) in each end of the carton with the slots in the foam facing inward.
3	Place the 861 power control in the carton with the ears of the upright sliding into the slots in the foam.
4	Coil the power cord so that it fits into the cavity in the rear of the power control.
5	Close and seal the carton with one piece of tape across the top of the carton and extending down the sides approximately three inches.

ENG	APPD	SIZE	CODE	NUMBER	REV
4/12/73		A	PI	3700083-0-0	A

DEC 8 (551)-1031-1-R671
DRA - 120

SHEET 1 OF 2

This drawing and specifications, herein, are the property of Digital Equipment Corporation and shall not be reproduced or copied or used in whole or in part as the basis for the manufacture or sale of items without written permission.

PACKAGING INSTRUCTION | REV: A | DATE: 4/73

TITLE 861 POWER CONTROL, INTERPLANT PACKAGE

FIGURE 1

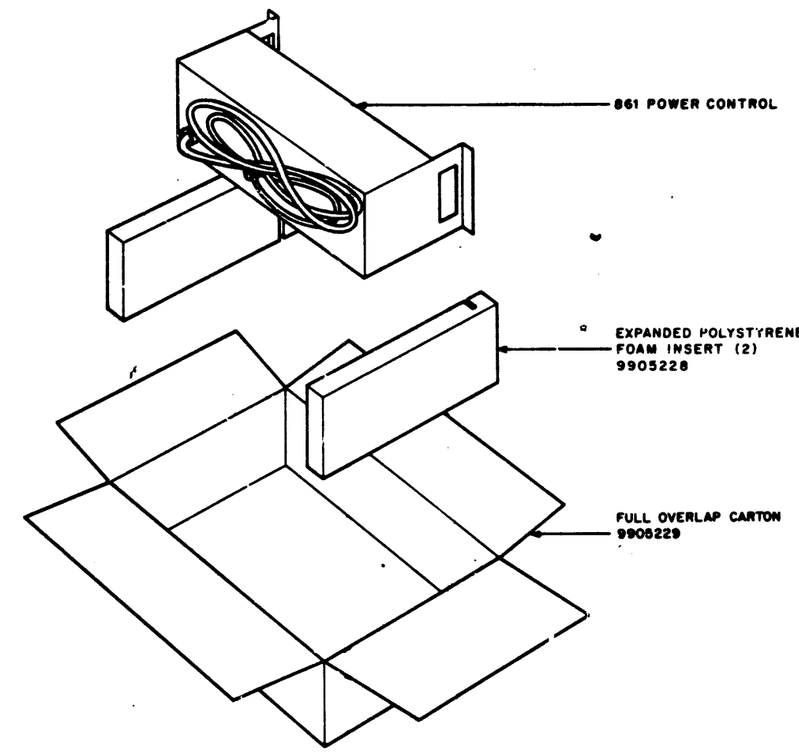

NOTE
Make changes to the "C" size original only and rephotograph.

ENG.	APPD.	SIZE	CODE	NUMBER	REV
		A	PI	3700083-0-0	A

DRC-107

SHEET 2 OF 2

"THIS DRAWING AND SPECIFICATIONS, HEREIN, ARE THE PROPERTY OF DIGITAL EQUIPMENT CORPORATION AND SHALL NOT BE REPRODUCED OR COPIED OR USED IN WHOLE OR IN PART AS THE BASIS FOR THE MANUFACTURE OR SALE OF ITEMS WITHOUT WRITTEN PERMISSION. COPYRIGHT © 1976 , DIGITAL EQUIPMENT CORPORATION"

NOTE :
1 R1 R2 + R3 ARE MOV VARISTOR SPIKE SURPRESSORS.

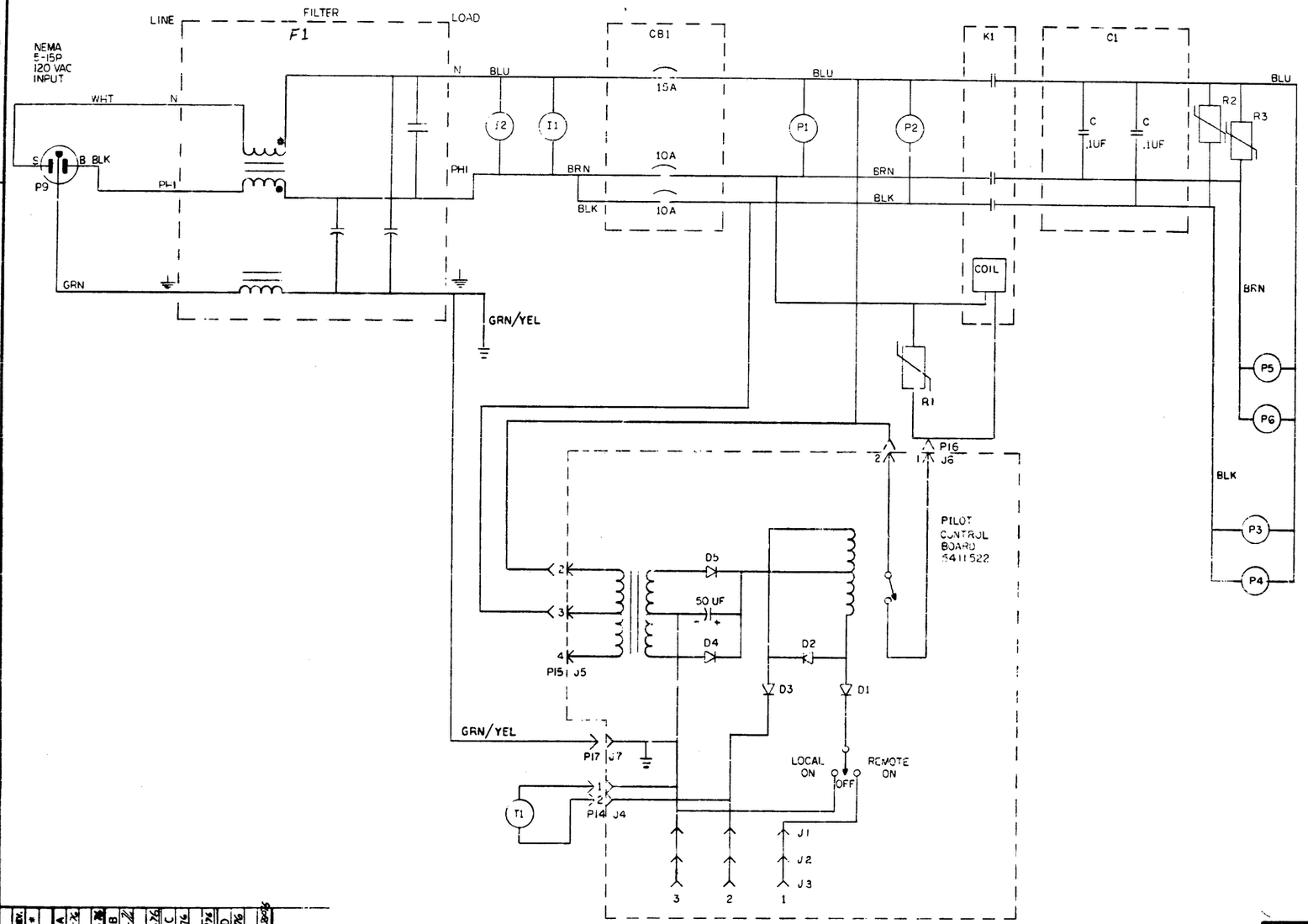

DESCRIPTION	DWG./PART NO.	ITEM NO.

UNLESS OTHERWISE SPECIFIED DIMENSIONS ARE IN INCHES

ANGLES ±0° 30'
SURFACE QUALITY IN MICROINCHES
CLASS OF ACCURACY (CHECK ONE)
NOMINAL DIMENSION RANGE INCHES: OVER 0 TO 0.3; OVER 0.3 TO 1.3; OVER 1.3 TO 4.0; OVER 4.0 TO 12.0; OVER 12.0 TO 40.0; OVER 40.0 TO 80.0
MEDIUM: ±.004 ±.008 ±.012 ±.016 ±.024 ±.04
PREFERRED: ±.012 ±.016 ±.025 ±.04 ±.063 ±0.1

QUANTITY & VARIATION

THIRD ANGLE PROJECTION

REMOVE BURRS AND BREAK SHARP CORNERS

DO NOT SCALE DWG

MATERIAL —//—

FINISH —//—

DRN. [signature] 4-24-76
CHK'D [signature] 4-28-76
ENG. [signature] 5-2-76
PROJ. ENG. [signature] 5-2-76
PROD. [signature] 5-2-76

NEXT HIGHER ASSY. B-DD-861-0

SCALE —//—

SHEET 1 OF 1

FIRST USED ON 861 P.C.

digital

TITLE CIRCUIT SCHEMATIC 861-F P.C.

SIZE D | CODE CS | NUMBER 861-F-1 | REV. D

DIST.

REVISIONS	CHANGE NO.	REV.
CHK	861-00007	*
ORIGINATED	861-00009	A
R. KENNEDY	861-00010	B
R. KENNEDY	861-00011	C
S. CARTER	861-00012	D
S. CARTER		

46

digital EQUIPMENT CORPORATION MAYNARD MASSACHUSETTS

DRAWING DIRECTORY

"THIS DRAWING AND SPECIFICATIONS, HEREIN, ARE THE PROPERTY OF DIGITAL EQUIPMENT CORPORATION AND SHALL NOT BE REPRODUCED OR COPIED OR USED IN WHOLE OR IN PART AS THE BASIS FOR THE MANUFACTURE OR SALE OF ITEMS WITHOUT WRITTEN PERMISSION. COPYRIGHT © 1975 , DIGITAL EQUIPMENT CORPORATION"

CUSTOMER PRINT SET INDEX

THIS IS PRINT SET

	SEQUENCE
DRAWING DIRECTORY	B-DD-H742Ø-Ø
WIRING DIAGRAM	D-CS-H742Ø-Ø-Ø
POWER LINE MONITOR	D-CS-5411086-0-1
H742Ø POWER SUPPLY	E-UA-H742Ø-Ø-Ø
H7420 POWER SUPPLY (P.L.)	A-PL-H742Ø-Ø-Ø

UNIT VARIATIONS

VAR	TITLE	PRINT SET 1
H742ØA	H742Ø POWER SUPPLY (120V)	
H742ØB	H742Ø POWER SUPPLY (240V)	

REVISIONS

DATE	CHG. NO.	REV
6-75	H7420-1	A
7-75	H7420-2	B
3-76	H7420-3	C
4-76	H7420-4	D
9-76	H7420-5	E

USED ON OPTION/MODEL

SHEET 1 OF 3

		DATE
DRN.	R.E.Thollen	1/29/75
CHK'D.	P. Cappabianco	2/3/75
PROJ ENG.	[illegible]	[illegible]
PROD.	[illegible]	[illegible]
FIELD SERV.	[illegible]	2-19-75

TITLE: H742Ø POWER SUPPLY

SIZE	CODE	NUMBER	REV
B	DD	H742Ø-Ø	E

DIST

DEC 16-(325)-1062-1A-R972

DRB 106

147

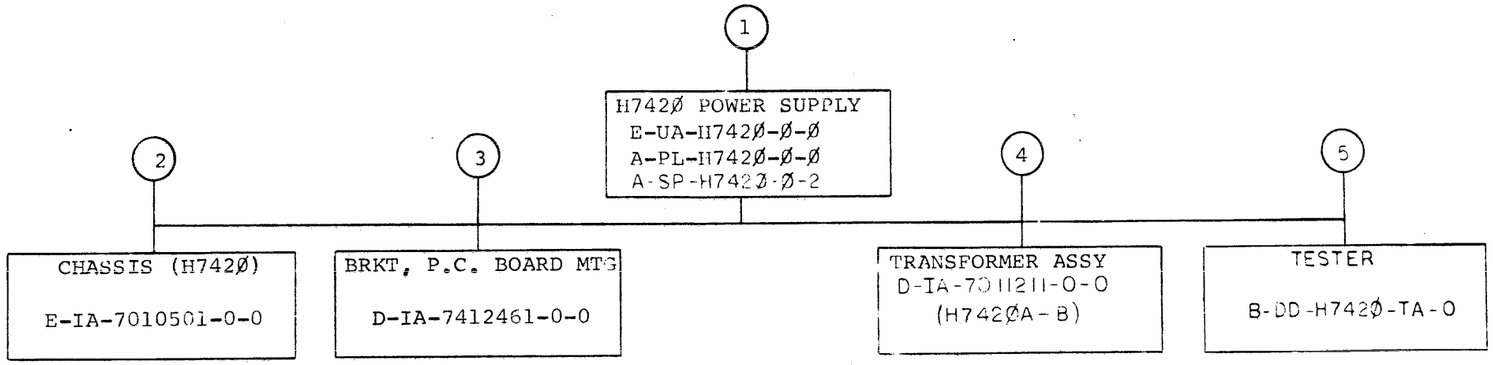

TITLE		SIZE	CODE	NUMBER	REV
H742Ø POWER SUPPLY	SHEET 2 OF 3	B	DD	H742Ø-Ø	E

DRB 107
DEC 16—(325)—1062—3—N871

ELECTRICAL

CUSTOMER PRINT SET 1	MFG. SET	FIND NO.	DRAWING NO.	REV	NO OF SHT	DESCRIPTION	OPTION NO./FILE DATE
X		1	B-DD-H742Ø-Ø	E	3	DRAWING DIRECTORY	
X			D-CS-H742Ø-Ø-1	A	2	WIRING DIAGRAM	
X			D-CS-5411086-0-1	#	4	POWER LINE MONITOR	
			A-SP-H742Ø-Ø-2	#	16	ENGINEERING SPEC.	
		5	B-DD-H742Ø-TA		1	TESTER DRAWING DIRECTORY	
			B-CS-H742Ø-TA-1	A	1	TESTER WIRING DIAGRAM	
			A-UA-H742Ø-TA-Ø		1	H7420 TESTER	
			A-PL-H742Ø-TA-Ø		2	TESTER PARTS LIST	
			A-SP-H742Ø-Ø-3		2	TEST PROCEDURE	

MECHANICAL

CUSTOMER PRINT SET 1	MFG SET	FIND NO.	DRAWING NO.	REV	NO OF SHT	DESCRIPTION	OPTION NO./FILE DATE
X		1	E-UA-H742Ø-Ø-Ø	E	4	H742Ø POWER SUPPLY	
X			A-PL-H742Ø-Ø-Ø	E	2	H742Ø POWER SUPPLY	
			D-MD-7412459-0-0	A	1	COVER, CONTROL BOX	
			C-IA-7010730-0-0		1	POWER INDICATOR ASSY	
			D-IA-7010729-0-0	A	1	CABLF, REGULATOR BOARD	
			D-IA-7010728-0-0		1	CABLE, FAN POWER	
			C-IA-7010727-0-0	C	1	POWER CORD, ASSEMBLY	
			A-DC-7413184-0-0		1	POWER SUPPLY DECAL (H742Ø)	
			A-DC-7413966-0-0		1	POWER SUPPLY DECAL (H7420A)	
			A-DC-7413967-0-0		1	POWER SUPPLY DECAL (H7420B)	
		2	E-IA-7010501-0-0		1	CHASSIS (H742Ø)	
			E-IA-7412948-0-0		2	PLATE, BASE	
			E-IA-7412949-0-0		2	HOUSING, REGULATOR	
		3	D-IA-7412461-0-0		1	BRKT, P.C. BOARD MTG.	
			B-SS-7412461-0-1		1	BRKT, P.C. BOARD MTG. (SS)	
		4	D-IA-7011211-0-0	A	2	TRANSFORMER ASSY (H7420A&B)	
			C-IA-7010813-0-0		1	CAP/VAR ASSEMBLY	

CUSTOMER PRINT SET CODES

X = PRINT OF DOCUMENT INCLUDED IN PRINT SET
C = INCLUDES ALL PRINTS INDICATED ON DOCUMENT
S = CONFIDENTIAL AUTHORIZED SIGNATURE REQUIRED

TITLE		SIZE	CODE	NUMBER	REV
H742Ø POWER SUPPLY	SHEET 3 OF 3	B	DD	H742Ø-Ø	E

DRB 108

DEC 16-(325)-1062-2B-R972

THE INFORMATION, DESIGNS AND SPECIFICATIONS, HEREIN, ARE THE PROPERTY OF DIGITAL EQUIPMENT CORPORATION AND SHALL NOT BE REPRODUCED OR USED IN WHOLE OR IN PART, AS THE BASIS FOR THE MANUFACTURE OR SALE OF ITEMS WITHOUT THE WRITTEN PERMISSION OF DIGITAL EQUIPMENT CORPORATION.
COPYRIGHT © 1975 DIGITAL EQUIPMENT CORPORATION

NOTES:
1. DOTTED LINES INDICATED WINDINGS OMITTED IN E AND F VERSIONS.
2.

VERSION	TBI JUMPERS	CBI
A	2+6, 4+8	20 A
B	4+6	15
E	2+6, 4+8	5
F	4+6	5

3. NUMBERS IN ( ) INDICATE XFORMER LEAD NUMBERS ON E&F VERSION.
~~4. G-CLIP TERMINAL CONNECTIONS~~
~~A=F=B CONNECTIONS~~

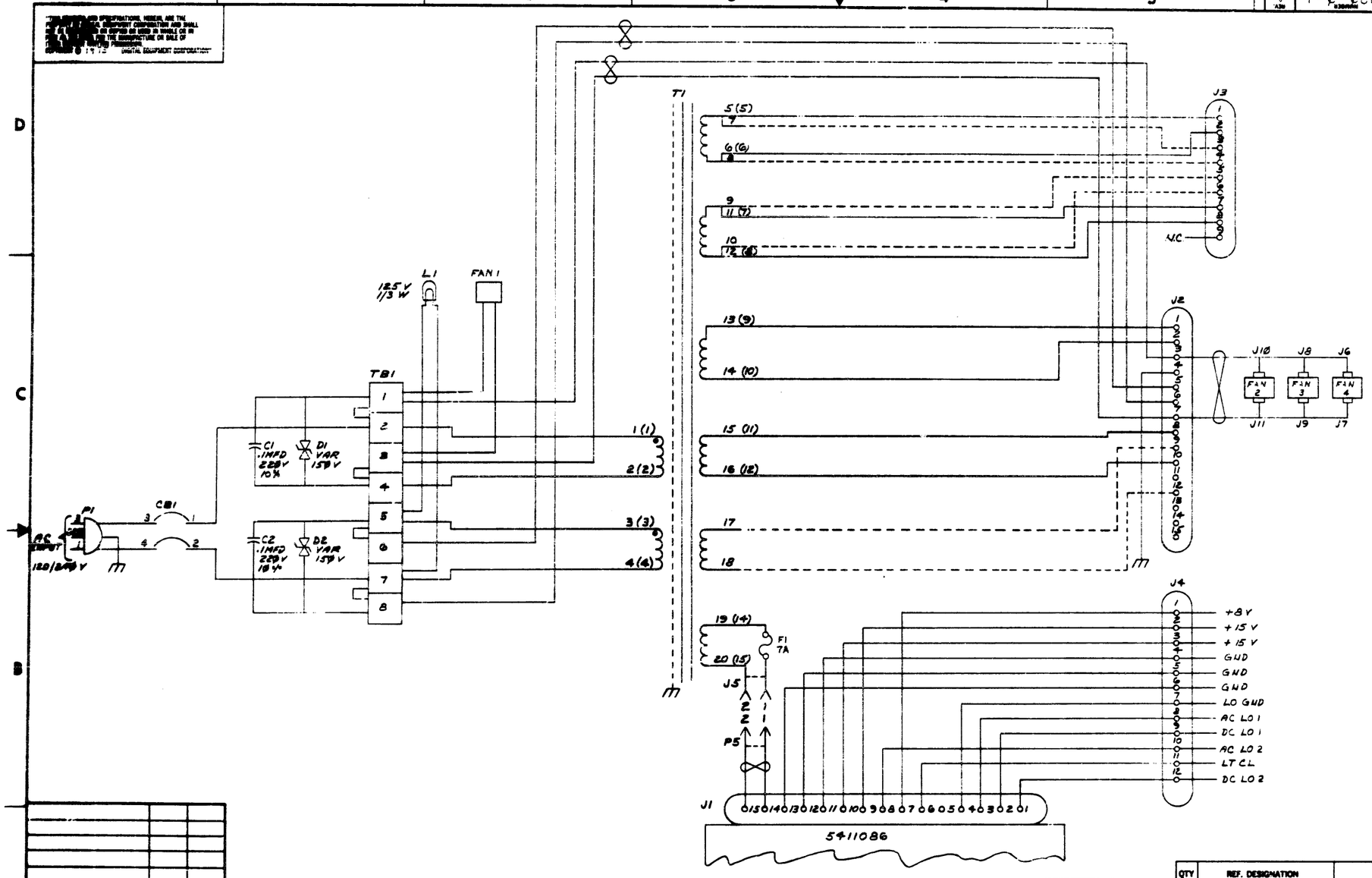

ID TYPE	GND	+5V
GND AND 5V ARE USUALLY PIN 7 AND 14 RESPECTIVELY UNLESS ARE SHOWN ABOVE		
IC PIN LOCATIONS		

QTY	REF. DESIGNATION	DESCRIPTION	PART NO.	ITEM NO.

PARTS LIST

FIRST USED ON OPTION MODEL: H7420

REV.	CHANGE NO.	CHK	DATE
A	H7420-3-00	F LOYA	6-26-75

DEC NO.	EIA NO.	DEC NO.	EIA NO.

SEMICONDUCTOR CONVERSION CHART

		DATE
DRN.	JH	1-17-75
CHK'D		6-27-75
ENG.		
FIELD ENG.		
PROD.		6-27-75

NEXT HIGHER ASSY

SCALE

SHEET 1 OF 1

digital

TITLE: WIRING DIAGRAM

SIZE	CODE	NUMBER	REV.
D	CS	H7420-0-1	A

DIST.

150

THIS DRAWING AND SPECIFICATION, HEREIN, ARE THE PROPERTY OF DIGITAL EQUIPMENT CORPORATION AND SHALL NOT BE REPRODUCED OR COPIED OR USED IN WHOLE OR IN PART AS THE BASIS FOR THE MANUFACTURE OR SALE OF ITEMS WITHOUT WRITTEN PERMISSION.
COPYRIGHT ©1974 DIGITAL EQUIPMENT CORPORATION

NOTES:

1. ~~R45, R46, C4, C9, & C11 ARE NOT USED ON BASIC 5411086 BUT ARE RESERVED FOR PLANNED FUTURE MODULE VARIATIONS.~~
2. ** TOTAL +15V AND +8V CURRENT NOT TO EXCEED 4.0 AMPERES.
3. W1 (TEST JUMPER) MAYBE TEMPORARILY REMOVED WHILE TROUBLE-SHOOTING TO DETERMINE IF LOSS OF 15V IS DUE TO CROWBAR CIRCUITRY. BUT MUST BE IN THE BOARD FOR NORMAL OPERATION.
4. ~~NON-ITEMIZED PARTS SUPPLIED WITH D12.~~
4. YA VERSION DOES NOT CONTAIN +15VDC REG.
5. A) FOR STANDARD VERSION USE SHEETS 1,2,3, & 4 OF THIS DWG.
   B) FOR YA VERSION USE SHEETS 1,2, & 3 OF THIS DWG.
6. WIRES MUST NOT EXTEND BEYOND THE DIMENSIONS OF THE BOARD.

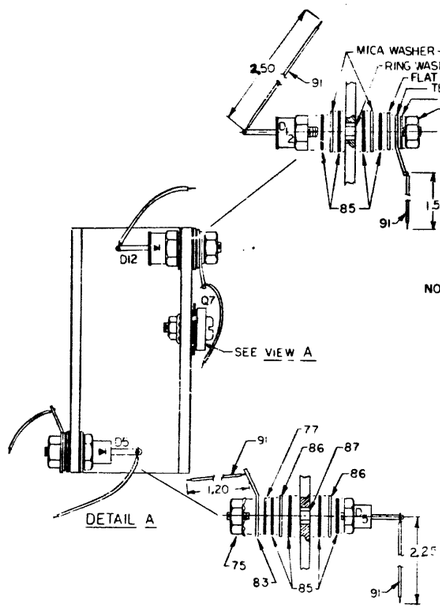

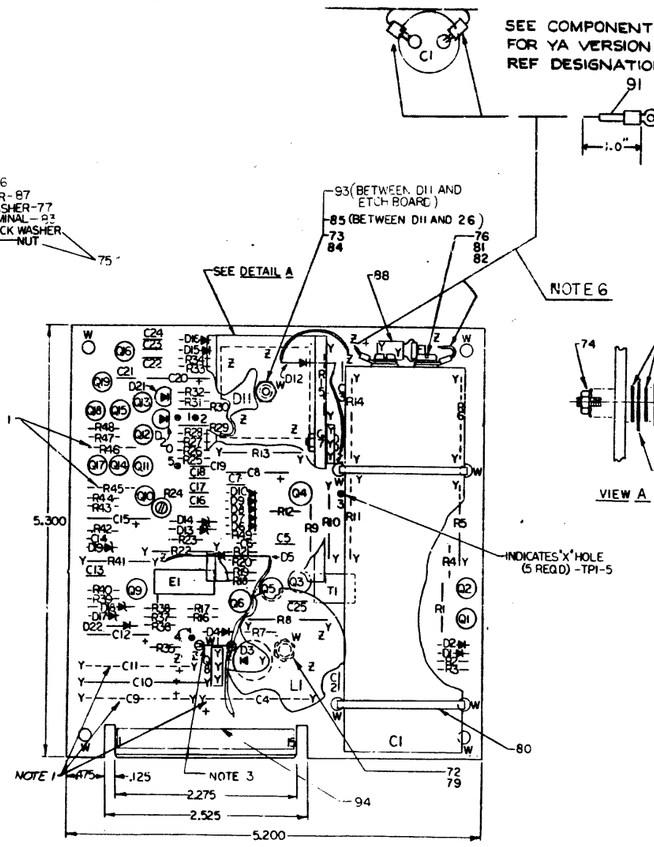

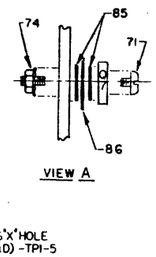

REF	REF				
REF	REF		X-Y COORDINATE HOLE LOCATION	K-CO-5411086-0-4	1
REF	REF		ASSY/DRILLING HOLE LAYOUT	D-AH-5411086-0-5	2
REF	REF		MODULE ECO HISTORY	B-MH-5411086-0-8	3
	1		ETCHED CIRCUIT BOARD	5011085	4
0	1	C2	CAPACITOR 56PF 100V 5%	1000812	5
4	4	C16,C17,C18,C21	CAPACITOR 330PF 100V 5%	1000823	6
3	5	C3,C13 C19,C22,C23	CAPACITOR .01uf 100V 20%	1001810-01	7
1	3	C6,C12,C15	CAPACITOR 2.2uf 35V 10%	1002431	8
2	2	C8,C25	CAPACITOR 18PF 100V 5%	1002808	9
1	1	C20	CAPACITOR 1.5uf 35V 10%	1009725	10
4	4	C5,C7,C14,C24	CAPACITOR .22uf 50V -20% +80%	1010274-01	11
0	1	C10	CAPACITOR 500uf 25V -10% +75%	1010509-01	12
1	1	C1	CAPACITOR 8400uf 50V -10% +75%	1010851	13
1	2	D2,D19	DIODE IN748A	1100122	14
0	1	D5	DIODE IN2970B	1100134	15
0	1	D3	DIODE MR1033B	1103341	16
7	8	D1,D6,D7,D8,D9,D15,D16,D22	DIODE D672	1105275	17
1	2	D10,D17	DIODE IN4744	1105648	18
0	1	D4	DIODE IN4004	1105796	19
0	1	D12	DIODE IN3880	1109440	20
0	1	D18	DIODE IN967A	1110068	21
2	2	D20,D21	DIODE MV5054-1 (LIGHT EMITTING)	1110324	22
1	1	D11	DIODE BRIDGE 200V 2A	1110714	23
2	2	D13,D14	DIODE ITTZ429	1110925	24
0	1	F1	FUSE PICO 5A	1205747	25
0	1		HEAT SINK	1211986	26
0	1	R23	RESISTOR 47 1 4W 5%	1300202	27
0	2	R7,R40	RESISTOR 100 1 4W 5%	1300229	28
0	1	R41	RESISTOR 100 1W 5%	1300232	29
1	3	R4,R12,R49	RESISTOR 220 1 4W 5%	1300271	30
0	1	R14	RESISTOR 220 2W 10%	1300278	31
0	1	R11	RESISTOR 680 2W 5%	1300348	32
2	2	R18,R28	RESISTOR 1K 1/4W 5%	1300365	33
0	1	R1	RESISTOR 1.5K 1-2W 5%	1300394	34
0	1	R10	RESISTOR 2.2K 1W 10%	1300420	35
1	1	R15	RESISTOR 3.3K 1W 10%	1300437	36
0	1	R3	RESISTOR 3.3K 1/4W 5%	1300439	37
2	2	R43,R47	RESISTOR 10K 1 4W 5%	1300479	38
0	1	R37	RESISTOR 10 1 4W 5%	1301317	39
2	3	R2,R44,R48	RESISTOR 750 1 4W 5%	1301401	40
0	1	R38	RESISTOR 680 1/4W 5%	1301424	41
0	1	R16	RESISTOR 22K 1 4W 5%	1301808	42
1	1	R13	RESISTOR 1K 2W 5%	1301952	43
0	1	R9	RESISTOR 27 1 2W 5%	1302253	44
2	2	R19,R21	RESISTOR 30K 1/4W 5%	1302394	45
0	1	R36	RESISTOR 511 1/4W 1%	1302411	46
0	1	R39	RESISTOR 909 1 4W 1%	1302685	47
1	1	R25	RESISTOR 3.16K 1/4W 1%	1303045	48
1	1	R8	RESISTOR 470 2W 5%	1303082	49
1	2	R17,R29	RESISTOR 1K 1 4W 1%	1303114	50
1	1	R31	RESISTOR 2.61K 1 4W 1%	1303303	51
0	1	R42	RESISTOR 10K 1/4W 1%	1303312	52
2	2	R33,R34	RESISTOR 5.11K 1 4W 1%	1304854	53
1	1	R30	RESISTOR 9.09K 1/4W 1%	1304855	54
YA	QTY	REF. DESIGNATION	DESCRIPTION	PART NO.	ITEM NO.

COMPONENT CHART -YA VERSION		
3	C19,C22,C23	7
1	C2	8
1	D19	14
7	D6,D7,D8,D9,D15,D16,D22	17
1	D10	18
1	R49	30
2	R44,R48	40
1	R28	50
4	Q3,Q5,Q10,Q19	63
4	Q11,Q12,Q13,Q16	66
QTY	REF. DESIGNATION	ITEM

IC TYPE	GND	+5V
GND AND 5V ARE USUALLY PIN 7 AND 14 RESPECTIVELY EXCEPTIONS ARE STATED ABOVE		
IC PIN LOCATIONS		

REV	CHANGE NO.	CHK	REVISIONS
J	ECO 5411086-00004		F. LOYA 4-JAN-76
H	ECO 5411086-00003		V. BOREN 6/9/75
F	ECO 5411086-00002		V. BOREN 6/9/75
E	ECO 5411086-00001		V. BOREN 2-6-75
D	ORIGINATED		V. BOREN 2-6-75

FIRST USED ON OPTION MODEL

ETCH BOARD REV.

DEC NO. | EIA NO. | DEC NO. | EIA NO.

SEMICONDUCTOR CONVERSION CHART

PARTS LIST

		DATE
DRN.		10-9-74
CHK'D.		DATE
ENG	Russell Boren	DATE 4/16/75
PROJ. ENG	Russell Boren	DATE 4/16/75
PROD.		DATE 4/16/75

NEXT HIGHER ASSY

SCALE

SHEET 1 OF 4

digital

TITLE: PWR. LINE MONITOR/15V REG.

SIZE D | CODE CS | NUMBER 5411086-0-1 | REV. J

DIST.

"THIS DRAWING AND SPECIFICATIONS, HEREIN, ARE THE PROPERTY OF DIGITAL EQUIPMENT CORPORATION AND SHALL NOT BE REPRODUCED IN COPIED OR USED IN WHOLE OR IN PART AS THE BASIS FOR THE MANUFACTURE OR SALE OF ITEMS WITHOUT WRITTEN PERMISSION.
COPYRIGHT © 1974 DIGITAL EQUIPMENT CORPORATION"

NOTES:

YA	QTY	REF DESIGNATION	DESCRIPTION	PART NO	ITEM NO
1	1	R29	RESISTOR 3.40K 1/4W 1%	1305114	95
1	1	R26	RESISTOR 5.62K 1/4W 1%	1305128	96
1	1	R27	RESISTOR 4.99K 1/4W 1%	1305324	97
0	1	R35	RESISTOR 24.9K 1/4W 1%	1305406	98
0	1	R24	RESISTOR 200 20% 02PR	1309150-10	99
1	1	R32	RESISTOR 10 2K 1/4W 1%	1309412	00
0	2	R6,R8	RESISTOR .2 5W 5% WW	1309884	01
0	1	Q7	TRANSISTOR MJE3055	1510555	02
4	8	Q2,Q3,Q5,Q8,Q15,Q19	TRANSISTOR MPSA05	1510705	03
0	2	Q4,Q9	TRANSISTOR MPS A55	1510706	04
0	1	Q6	TRANSISTOR 2N 4441	1505887	05
4	5	Q1,Q11,Q12,Q13,Q16	TRANSISTOR 2N 4250	1509142	06
4	4	Q14,Q15,Q17,Q18	TRANSISTOR 2N 5433	1511686	07
0	1	L1	INDUCTOR, 500 uh	1611866	08
1	1	T1	TRANSFORMER	1612028	09
0	1	E1	I.C. DEC 723	1910415	70
0	1		SCREW, PHM #4-40 X 7/16 LG.	9008012-1	71
0	1		SCREW, PHM #6-32 X 1/4 LG	9008020-1	72
0	1		SCREW, PHM #6-32 X 7/8 LG.	9006027-1	73
0	1		KEP NUT #4-40	9008557	74
0	2		KEP NUT #10-32	9008565	75
2	2		WASHER, ITTLKWR #10	9008635	76
0	2		WASHER, FLAT	9008668	77
0	2	(W1)	SPLIT LUG	9008751	78
0	1		SPACER, 1/4AF X 1/2	9008844	79
4	4		CABLE TIE	9007880	80
2	2		TERMINAL	9007930	81
2	2		SCREW, PHM #10-32 X 1/4 LG.	9008007-1	82
0	2		TERMINAL	9008150	83
0	1		KEP NUT #6-32	9008185	84
0	A/R		COMPOUND, THERMAL JOINT	9008268	85
0	5		WASHER, MICA	9008424	86
0	2		WASHER, RING	9008440	87
0	1		FUSE HOLDER	9009141	88
1	1	R22	RESISTOR, 390, 2W 10%	1301880	89
0	1	W1	JUMPER	9009185	90
2	12		WIRE #18 STRANDED BLK	9107380-0-0	91
REF	REF		MODULE TEST PROCEDURE	A-SP-1145-TA-2	92
1	1		WASHER, RING	900673	93
1	1		.010 INCH SHIM	7413721-0-0	94
REF	REF		ENG. SPEC-AND TEST PROC.	A-SP-5411086-0-3	95

FIRST USED ON OPTION MODEL

PARTS LIST

ETCH BOARD REV D

IC TYPE	GND	+ 5V
GND AND +5V ARE USUALLY PIN 7 AND 14 RESPECTIVELY EXCEPTIONS ARE STATED ABOVE		

IC PIN LOCATIONS

REV	CHANGE NO	DEC NO	EIA NO	DEC NO	EIA NO
CHK					

REVISIONS

SEMICONDUCTOR CONVERSION CHART

		DATE
DRN		
CHK D		DATE
ENG		DATE 10/11/74
PROJ ENG		DATE 10/11/74
PROD		DATE 10/11/74

NEXT HIGHER ASSY

SCALE

SHEET 2 OF 4

digital EQUIPMENT CORPORATION

TITLE PWR. LINE MONITOR/15V REG.

SIZE	CODE	NUMBER	REV.
D	DCS	5411086-0-1	J

DIST

DCS 5411086-0-1 J

152

"THIS DRAWING AND SPECIFICATION, HEREIN, ARE THE PROPERTY OF DIGITAL EQUIPMENT CORPORATION AND SHALL NOT BE REPRODUCED OR COPIED OR USED IN WHOLE OR IN PART AS THE BASIS FOR THE MANUFACTURE OR SALE OF ITEMS WITHOUT WRITTEN PERMISSION.
COPYRIGHT © 1974 DIGITAL EQUIPMENT CORPORATION"

+25 TO +45 VDC

R8 47Ø 2W

R13 1K 2W

TP3

C25 18pf

R21 30K

Q3 MPS AØ5

R2Ø 1K

R18 1K

Q5 MPS AØ5

R19 30K

C6 18pf

T1

C5 .22uf 5ØV

C8 2.2uf 35V

D22 D672

D8 D672

D9 D672

D6 D672

D7 D672

C7 .22uf 5ØV

D1Ø IN4744 15V

R48 75Ø

Q19 MPS AØ5

5 -1ØV TO -15V (TEST POINT)

(ENG OPTION SEE NOTE 1)

R46 1/2W

Q15 2N5433

Q18 2N5433

R47 1ØK

R49 22Ø

3 AC LO 1

8 AC LO 2

4 LO GND

R43 1ØM

D15 D672 AC-2

D16 D672 AC-1

20V TO 33V RMS AC INPUT

R34 5.11K 1%

R33 5.11K 1%

C24 .22uf 5ØV

C21 1.5uf 35V

R32 18.2K 1%

TP1

TP2

R31 2.61K 1%

R3Ø 5.09K 1%

R25 3.49K 1%

R26 5.62K 1%

TP5

R27 4.99K 1%

Q16 2N4250

Q13 2N4250

Q12 2N4250

Q11 2N4250

C21 330pf

C18 330pf

C17 330pf

C16 330pf

ACOK

D2Ø MV5ØD54-1

D21 MV5054

DCOK

R25 3.16K 1%

D14 ITT2429 5.1V

D13 ITT2429 5.1V

C22 .01uf 1ØØV

C23 .01uf 1ØØV

R28 1M 1%

C19 .01uf 1ØØV

RETURN

+25 TO +45VDC

R44 75Ø

Q17 MPS AØ5

Q17 2N5433

Q14 2N5433

1 DC LO 2

2 DC LO 1

R45 1/2W (SEE NOTE 1 ENG. OPTION)

TO 20V TO 33V RMS AC INPUT

AC-1 15

AC-2 14

D11

C20 .22uF 5ØV

R15 3.3K 1W

6 LINE CLK L

R22 390Ω 2W

D19 3.3V IN748A

C14 .22uF 5ØV

POWER FAIL CIRCUIT

REVISIONS		
CHK	CHANGE NO.	REV.

TITLE PWR. LINE MONITOR/15V REG.

SIZE D CODE CS NUMBER 5411086-0-1

SCALE — SHEET 3 OF 4

"THIS DRAWING AND SPECIFICATIONS, HEREIN, ARE THE PROPERTY OF DIGITAL EQUIPMENT CORPORATION AND SHALL NOT BE REPRODUCED OR COPIED OR USED IN WHOLE OR IN PART AS THE BASIS FOR THE MANUFACTURE OR SALE OF ITEMS WITHOUT WRITTEN PERMISSION.
COPYRIGHT © 1974 DIGITAL EQUIPMENT CORPORATION"

+25 TO +45 VDC

F1

25 - 45 VDC

C3 .01uf

R14 22Ω 2W, 10%

D12 IN3880

L1 500uH

Q7 MJE 3055

R9 27 1/2W

Q4 MPS A55

R11 68Ω 2W

R12 22Ω

R10 2.2K 1W, 10%

TP4

+15V

4.28V

R35 24.9K 1%

D3 MR1033B

D5 IN2970B 6.8V

D4 IN4004

R41 100 1W

9 10 +15VDC ± 5% @ 4A MAX (SEE NOTE 2)

7 +8VDC ± 10% @ 1A MAX (SEE NOTE 2)

W1 (SEE NOTE 3)

C12 2.2uf 35V

D17 IN4794 15V ± 1%

1/2 723C E1

REF

COMP

R36 511 1%

R24 200 4.28V

R17 1K 1%

R39 909 1%

C15 2.2uf 35V

R16 22K 1%

R23 47

Q6 MPS A05

R7 100

D1 D672

C2 56pf

R2 75Ω

D2 IN748A 3.9V

R3 3.3K

Q1 2N4250

R1 1.5K 1/2W

R42 10K 1%

Q2 MPS A05

R4 22Ω

R6 .2 5W

R5 .2 5W

RETURN

R38 68Ω

R37 10

Q9 MPS F55

Q8 2N4441

C13 .01uf

R40 100

D18 IN967A 18V

C10 500uf 25V

C4 50uf 50V

C9 50uf 50V

C11 50uf 50V

SEE NOTE #1

11 GND
12 GND
13 GND

15V REGULATOR
(SEE NOTE #4)

REVISIONS		
CHK	CHANGE NO.	REV.

TITLE	PWR. LINE MONITOR/15V REG.		
SCALE —H—	SHEET 4 OF 4	SIZE CODE D	NUMBER DCS5411086-0-1
DIST.			

154

DO NOT SCALE DRAWING

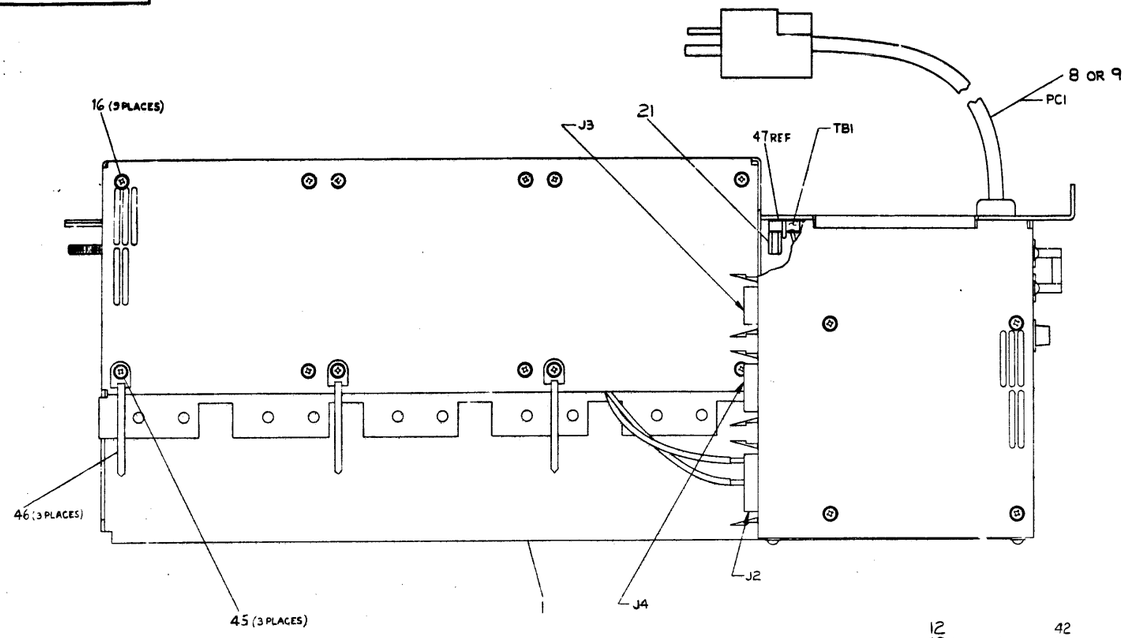

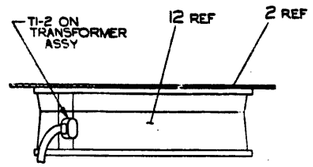

SECTION D-D
SCALE: NONE

NOTES:

1. AFTER TERMINAL BLOCK (PART OF TRANSFORMER ASSEMBLY) IS MOUNTED TO CHASSIS, CAPACITOR AND VARISTOR SHOULD BE BENT FORWARD TO ALLOW CLEARANCE FOR COVER.
2. ~~REV. D AND EARLIER TRANSFORMERS DO NOT HAVE THIS WIRE. H7420 E+F ONLY.~~
3. FILLER PANELS (D-IA-7413405-0-0) MAY BE USED IN UNFILLED REGULATOR SLOTS (REF).
4. CABLE TIE MOUNTS TO BE MOUNTED AFTER TRANSFORMER ASSEMBLY IS INSTALLED.
5. ~~H7420 A+B ONLY.~~
6. ~~H7420 E+F ONLY.~~
7. *REMOVE PAINT MASK, APPLY CONDUCTIVE GREASE ITEM 42, PLACE ITEM 41 8-32 EXT TOOTH WASHER NEXT TO CHASSIS BEFORE INSTALLING REMAINING HARDWARE. DO THIS AT G1 AND G2.*

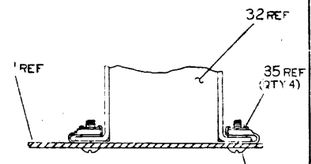

SECTION C-C
SCALE: NONE

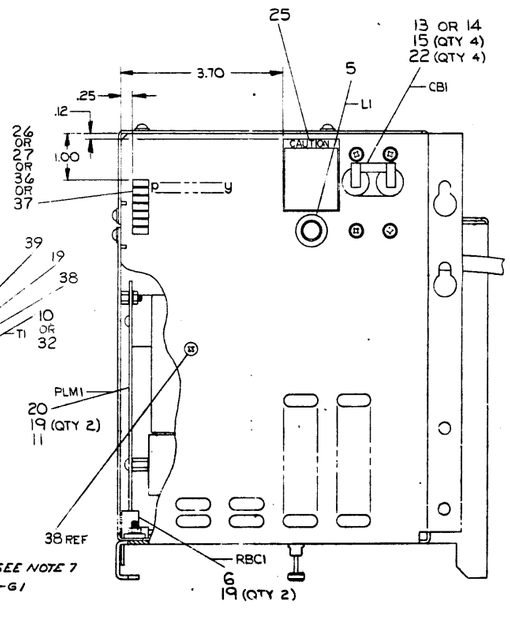

FOR PARTS LIST REFER TO A-PL-H7420-0-0

PARTS LIST

QTY. | DESCRIPTION | PART NO.

FOR ITEMS USED ON OPTION MODEL H7423

UNLESS OTHERWISE SPECIFIED: DECIMALS ±.005, ±.030, ±.010; ANGLES ±1°; FINISH

DRAWN 10 M 11/74; CHECKED L 11/74; ENG APPV 11/74; MFG APPV 11/74

TITLE: H7420 POWER SUPPLY

SIZE E | CAGE CODE UA | DWG NO. H7420-0-0 | REV. E

SEE PARTS LIST | CD-H7423-0 | SCALE | SHEET

DO NOT USE THIS DRAWING FOR PROCUREMENT OR MANUFACTURING PURPOSES UNLESS IT IS SPECIFICALLY RELEASED FOR THOSE PURPOSES.

THE INFORMATION CONTAINED IN THIS DRAWING AND SPECIFICATION, MANUAL AND THE PROPERTY OF EATON-KENNEDY CORPORATION AND SHALL NOT BE REPRODUCED OR USED IN WHOLE OR IN PART AS THE BASIS FOR THE MANUFACTURE OR SALE OF ITEMS WITHOUT WRITTEN PERMISSION. COPYRIGHT © 1975 - EATON-KENNEDY

"THIS DRAWING AND SPECIFICATIONS, HEREIN, ARE THE PROPERTY OF DIGITAL EQUIPMENT CORPORATION" AND SHALL NOT BE REPRODUCED OR C.C. TO OR USED IN WHOLE OR IN PART AS THE BASIS FOR MANUFACTURE OR SALE OF ITEMS WITHOUT WRITTEN PERMISSION.
COPYRIGHT ©1975 - DIGITAL EQUIPMENT CORPORATION"

DO NOT SCALE DRAWING

WIRE TABLE

ITEM NO	DESCRIPTION AWG	COLOR	FROM CONNECTION	TO CONNECTION	REMARKS
10	⟋⟋	⟋⟋	T1-J5	RBC1-P5	
1	14	GRN	T1-1	G1	SEE NOTE 2&7
	⟋⟋	BLK	T1-2	FAN1-1 & 2	
	14	WHT	T1-3	CB1-1	
1	14	GRN	T1-4	G1	SEE NOTE 7
10	14	BLK	T1-5	CB1-2	
5	22	BLK	L1-1	TB1-5	
5	22	BLK	L1-2	TB1-7	
7	18	RED	FPC1-J6	FAN 4-1	
1	1	WHT	FPC1-J7	FAN 4-2	
		RED	FPC1-J8	FAN 3-1	
		WHT	FPC1-J9	FAN 3-2	
		RED	FPC1-J10	FAN 2-1	
		WHT	FPC1-J11	FAN 2-2	
1	1	RED	FPC1-1	J2-3	
7	18	WHT	FPC1-2	J2-7	
8/9	14	BRN	PC1-1	CB1-4	
8/9	14	GRN/YEL	PC1-2	G1	SEE NOTE 7
8/9	14	BLU	PC1-3	CB1-3	
11	⟋⟋	⟋⟋	PLM1	RBC1-J1	
10	14	GRN/YEL	T1-6	G1	SEE NOTE 7
10	14	GRN/YEL	T1-7	G2	SEE NOTE 7

JUMPER TABLE

ITEM NO	DESCRIPTION AWG	COLOR	FROM CONNECTION	WITH	TO CONNECTION	WITH	PRECUT LENGTH	VARIATION
29	14	BLK	TB1-2	ITEM 28	TB1-6	ITEM 28	3.0	H7420E & A
29	14	BLK	TB1-4	ITEM 28	TB1-8	ITEM 28	3.0	
29	14	BLK	TB1-4	ITEM 28	TB1-6	ITEM 28	3.0	H7420F & B

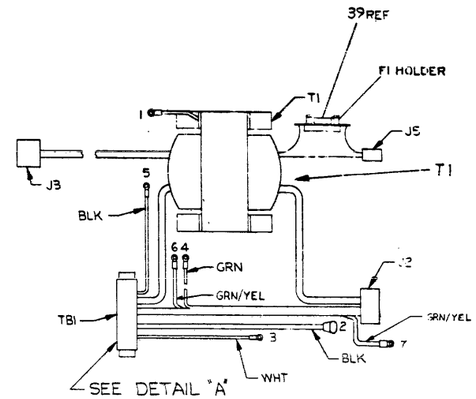

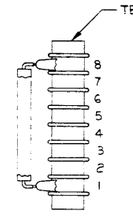

DETAIL "A"
SCALE: NONE

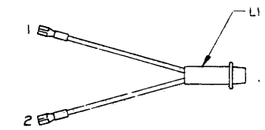

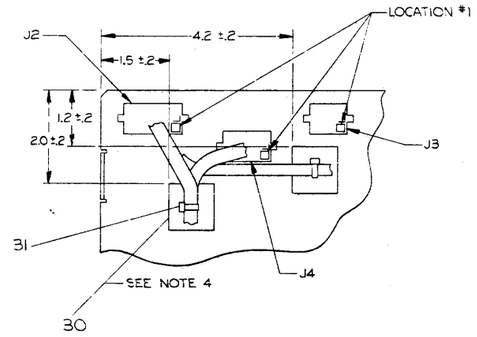

SECTION B-B
SCALE: NONE

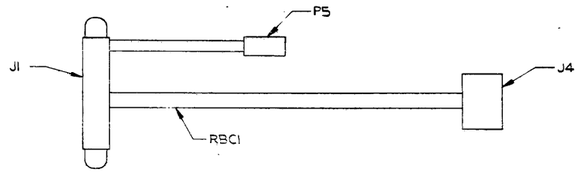

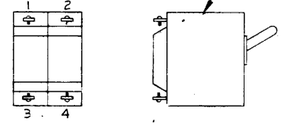

PLM1
(5411086)

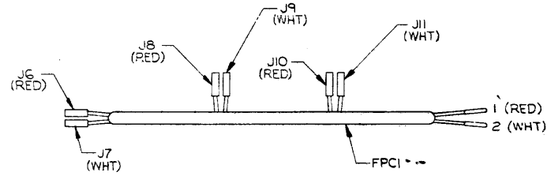

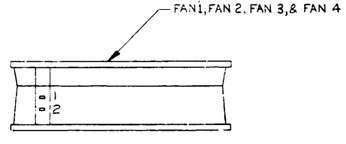

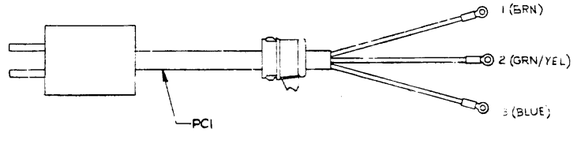

REVISIONS		
SYM	CHANGE NO.	REV.

TITLE	H7420 POWER SUPPLY	SIZE/CODE	NUMBER / REV
SCALE	NONE / SHEET 2 OF 2	E	UA H7420-3-0 / E
		DIST.	

156

DIGITAL EQUIPMENT CORPORATION
MAYNARD, MASSACHUSETTS

PARTS LIST

MADE BY	R. THELLEN	CHECKED	P. CAPPABIANCA	SECTION	1
DATE	1/17/75	DATE	2/3/75		
ENG	R. WOLF	PROD	J. BORENSTEIN	ISSUED SECT.	1
DATE	2/3/75	DATE	2/3/75		

ITEM NO	DWG NO. / PART NO.	DESCRIPTION	H7420A	H7420B
1	E-IA-7010501-0-0	CHASSIS (H742Ø)	1	1
2	D-MD-7412459-0-0	COVER, CONTROL BOX	1	1
3	D-IA-7412461-0-0	BRKT, P.C. BOARD MTG.	1	1
~~4~~	~~C-IA-7413133-0-0~~	~~PLATE, ADAPTER (H742Ø)~~	~~-~~	~~-~~
5	C-IA-7010730-0-0	POWER INDICATOR ASSEMBLY	1	1
6	D-IA-7010729-0-0	CABLE, REGULATOR BOARD	1	1
7	D-IA-7010728-0-0	CABLE, FAN POWER	1	1
8	C-IA-7010727-1-0	POWER CORD ASSY (120V)	1	-
9	C-IA-7010727-2-0	POWER CORD ASSY (240V)	-	1
~~10~~	~~D-IA-7010814-0-0~~	~~TRANSFORMER ASSY~~	~~-~~	~~-~~
11	D-CS-5411086-0-1	POWER LINE MONITOR	1	1
12	1209403-01	FAN	4	4
~~13~~	~~1210191-06~~	~~CIRCUIT BREAKER (20A)~~	1	-
~~14~~	~~1210191-03~~	~~CIRCUIT BREAKER (15A)~~	-	1
15	9006020-01	SCR,PHL PAN HAD #6-32 x .25	8	8
16	9006025-01	SCR,PHL PAN HD #6-32 x .62	13	13
~~17~~	~~9006565-00~~	~~NUT,KEP #10-32~~	~~-~~	~~-~~
18	9006563-00	NUT,KEP #8-32	2	2
19	9008185-00	NUT,KEP #6-32	5	5
20	9006840-00	SPACER, #6-32 x .19	2	2
21	9006851-00	SPACER, #6-32 x .50	2	2
22	9006633-00	WASHER, INT. TOOTH LOCK #6	24	24

TITLE	ASSY NO.	SIZE	CODE	NUMBER	REV.	ECO NO
POWER SUPPLY H742Ø	E-UA-H742Ø-Ø-Ø	A	PL	H742Ø-Ø-Ø	E	H7420-00005
	SHEET 1 OF 3	DIST.				

DEC FORM DEC 16-(325)-1031-N870
DRA 110

DIGITAL EQUIPMENT CORPORATION
MAYNARD, MASSACHUSETTS

PARTS LIST

MADE BY	R. THELLEN	CHECKED	P. CAPPABIANCA	SECTION	1
DATE	17-JAN-75	DATE	3-FEB-75		
ENG	R. WOLF	PROD	J. BORENSTEIN	ISSUED SECT.	1
DATE	3-FEB-75	DATE	3-FEB-75		

ITEM NO	DWG NO. / PART NO.	DESCRIPTION	H7420A	H7420B
45	9006026-1	SCR PH PAN HD #6-32 x 3/4	3	3
46	9007033	TIE CABLE	3	3
47	9006933	BLOCK, TERM MARKER STRIP	1	1

TITLE	ASSY NO.	SIZE	CODE	NUMBER	REV.	ECO NO
POWER SUPPLY H742Ø	E-UA-H742Ø-Ø-Ø	A	PL	H742Ø-Ø-Ø	E	
	SHEET 3 OF 3	DIST.				

DEC FORM DEC 16-(325)-1031-N870
DRA 110

DIGITAL EQUIPMENT CORPORATION
MAYNARD, MASSACHUSETTS

PARTS LIST

MADE BY	R. THELLEN	CHECKED	P. CAPPABIANCA	SECTION	1
DATE	1/17/75	DATE	2/3/75		
ENG	R. WOLF	PROD	J. BORENSTEIN	ISSUED SECT.	1
DATE	2/3/75	DATE	2/3/75		

ITEM NO	DWG NO. / PART NO.	DESCRIPTION	H7420A	H7420B
~~23~~	~~9008599-00~~	~~RELIEF, STRAIN~~	~~1~~	~~-~~
24	9009165-00	CLIP, FAN MOUNTING	16	16
25	A-DC-7413184-0-0	POWER SUPPLY DECAL (H742Ø)	1	1
~~26~~	~~A-DC-7413186-0-0~~	~~POWER SUPPLY DECAL (H742ØE)~~	~~-~~	~~-~~
~~27~~	~~A-DC-7413185-0-0~~	~~POWER SUPPLY DECAL (H742ØP)~~	~~-~~	~~-~~
28	9007969-00	TERMINAL, QUICK CONNECT	4	2
29	9107370-00	WIRE, #14 AWG, TYC	A/R	A/R
30	9008264-00	MOUNT, CABLE TIE, ADHESIVE	2	2
31	9007880-00	TIE, CABLE	2	2
32	D-IA-7011211-0-0	TRANSFORMER ASSY	1	1
33	3612680-01	SAFETY GROUND DECAL	1	1
34	9006074-3	SCR, PH. HD. TRUSS 10x32x5/8	4	4
35	9006586	TINNERMAN SPEED NUT 10-32	4	4
36	A-DC-7413965-0-0	POWER SUPPLY DECAL (H742ØA)	1	-
37	A-DC-7413967-0-0	POWER SUPPLY DECAL (H742ØB)	-	1
38	9006021-1	SCR. PAN HD. 6-32x5/16	1	1
39	9007224	FUSE 7 AMP SLOW BLOW	1	1
~~40~~	~~9009768-01~~	~~RELIEF, STRAIN~~	~~1~~	~~1~~
41	9008072	8-32 WASHER EXT. TOOTH	1	1
42	4901173-01	CONDUCTIVE GREASE	A/R	A/R
43	1212124-01	CIRCUIT BREAKER (20A)SCREW TERM	1	-
44	1212124-02	CIRCUIT BREAKER (15A)SCREW TERM	-	1

TITLE	ASSY NO.	SIZE	CODE	NUMBER	REV.	ECO NO.
POWER SUPPLY H742Ø	E-UA-H742Ø-Ø-Ø	A	PL	H742Ø-Ø-Ø	E	
	SHEET 2 OF 3	DIST.				

DEC FORM DEC 16-(325)-1031-N870
DRA 110

digital EQUIPMENT CORPORATION

DRAWING DIRECTORY

"THIS DRAWING AND SPECIFICATIONS, HEREIN, ARE THE PROPERTY OF DIGITAL EQUIPMENT CORPORATION AND SHALL NOT BE REPRODUCED OR COPIED OR USED IN WHOLE OR IN PART AS THE BASIS FOR THE MANUFACTURE OR SALE OF ITEMS WITHOUT WRITTEN PERMISSION. COPYRIGHT © , DIGITAL EQUIPMENT CORPORATION"

CUSTOMER PRINT SET INDEX

THIS IS PRINT SET

SEQUENCE		SEQUENCE	
DRAWING DIRECTORY	B-DD-H744-Ø		
CIRCUIT SCHEMATIC	D-CS-H744-Ø-1		
UNIT ASS'Y	E-UA-H744-0-0	MFG. SET	
		TEST PROCEDURE	A-SP-H744 Ø-3
		MFG. SPE	A-SP-H744-Ø-Ø
		PACKAGING INSTRUCTIONS	A-P1-3700074-0-0

UNIT VARIATIONS

VAR	TITLE	PRINT SET H744-1
H744	+5v REGULATOR	X

REVISIONS					
REV	L	M	N	P	
CHG. NO.	00015	00016	00017	00018	
DATE			9-76	10-76	

USED ON OPTION/MODEL		DRN.	DATE	TITLE
11/45		D. FONTAINE	2-4-72	+5v REGULATOR
		CHK'D. D. FONTAINE	DATE 2-4-72	
		PROJ ENG. G. POTTER	DATE 2-25-72	
		PROD. A. HIRSCH	DATE 2-24-72	SIZE B / CODE DD / NUMBER H744-Ø / REV P
		FIELD SERV. A. ZINS	DATE 2-25-72	DIST

SHEET 1 OF 2

EN-01062-1A-1F-R972-(329)

DRB 106

168

ELECTRICAL

CUSTOMER PRINT SET H744-1	MFG. SET	FIND NO.	DRAWING NO.	REV	NO OF SHT	DESCRIPTION	OPTION NO./FILE DATE
x		1	D-CS-H744-Ø-1	Y	1	CIRCUIT SCHEMATIC	H744
	x		A-SP-H744-Ø-3			TEST PROCEDURE	H744
	x		A-SP-H744-Ø-8			MFG. SPEC	H744

MECHANICAL

CUSTOMER PRINT SET H744-1	MFG SET	FIND NO.	DRAWING NO.	REV	NO OF SHT	DESCRIPTION	OPTION NO./FILE DATE
x		1	E-UA-H744 Ø-Ø	Y	1	UNIT ASSY	H744
			D-PS 1210737-0-0		1	HEAT SINK	H744
			D-IA-5309756-0-0		1	REGULATOR BRK'T	H744
			C-IA 5309760-0-0		1	COMPONENT COVER	H744
			C-MD-5309759-0-0		1	CAPACITOR STRAP	H744
		2	A-PI-3700074-0-0	-	2	PACKAGING INSTRUCTION	H744
			A-PS-9905211-0-0	-	2	OUTER CARTON	
			A-PS-9905212-0-0	-	2	INNER PACKAGING	
			C-IA-7412388-0-0			2.5 CAP HOLDER	H744

CUSTOMER PRINT SET CODES		TITLE		SIZE	CODE	NUMBER	REV
	X = PRINT OF DOCUMENT INCLUDED IN PRINT SET C = INCLUDES ALL PRINTS INDICATED ON DOCUMENT S = CONFIDENTIAL AUTHORIZED SIGNATURE REQUIRED	+5v REGULATOR	SHEET2 OF 2	B	DD	H744-Ø	P

DRB 108

DEC 16-(325)-1062-2B-R972

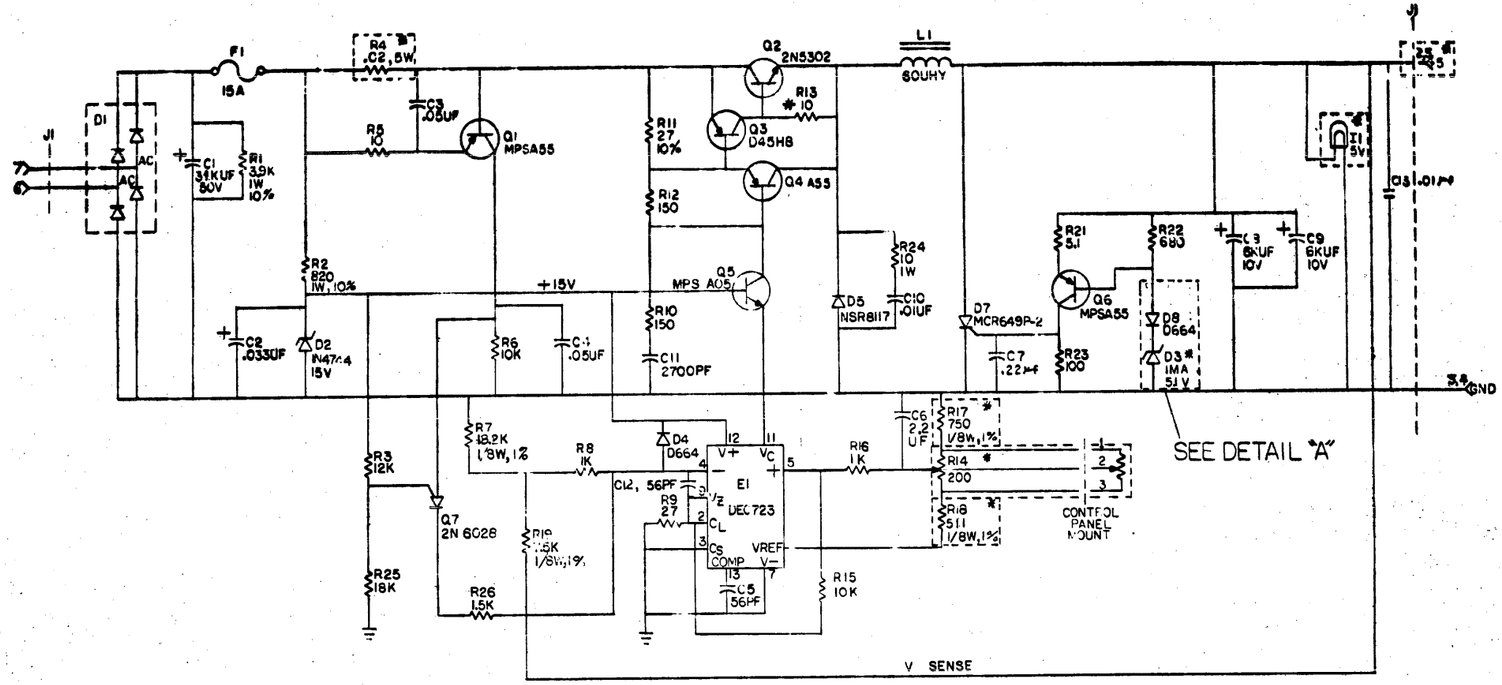

*FUSIBLE RESISTOR

* FOR YA VARIATION COMPONENT VALUES ARE AS FOLLOWS:
R4 - .06 5W
R14 - 1K 10 TURN
R17 - 300 1/8W 1%
R18 - 150 1/4W 5%
D3 - IN754
I1 - 15V
J1-2,5 - +20-8.0V

* D9 - D664 ADDED FOR YA VARIATION ONLY

UNLESS OTHERWISE INDICATED:
RESISTORS ARE 1/4W, 5%

QTY	REF DESIGNATION	DESCRIPTION	PART NO.	ITEM NO.
		PARTS LIST		
		IN964A	SAME	
		D664	MV 1805	
		MCR 649P2	SAME	
		IN754	SAME	
		14		
		17		
		1		

5V REGULATOR

H744-0-1

160

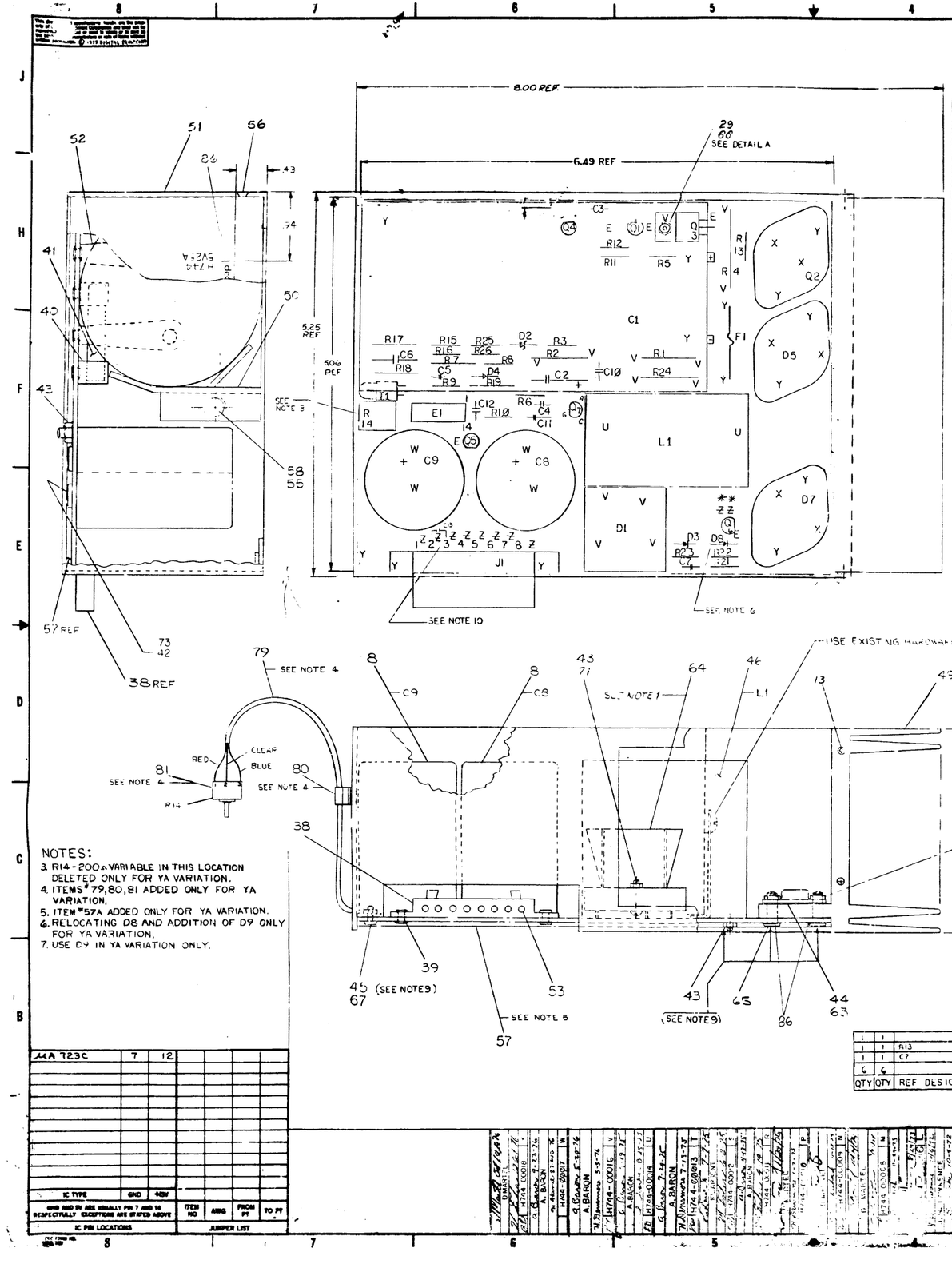

NOTES:

1. APPLY ITEM #63 (COMPOUND) BETWEEN TRANSISTOR (Q2), DIODES (D5, D7) AND ITEM #44 (WASHER). ALSO BETWEEN ITEM #44 (WASHER) AND HEAT SINK (ITEM #49). ALSO APPLY ITEM #63 (COMPOUND) BETWEEN ITEM #9 (DIODE BRIDGE) AND ITEM #64 (HEAT SINK BRIDGE).

NOTE 8:

(1) Q3 SCREW HEAD SHOULD BE ON TOP OF FLAT RECTANGULAR WASHER AS SHOWN. APPLY 6 INCH LBS. OF TORQUE WHEN SECURING Q3 TO CKT. BOARD BEFORE SOLDERING.

NOTE 9: TORQUE APPLICATION

(1) APPLY 12 INCH LBS. OF TORQUE TO ALL #4 HARDWARE EXCEPT Q3.
(2) APPLY 16 INCH LBS. OF TORQUE TO ALL #6 AND #10 HARDWARE.
(3) ALL HARDWARE TO BE TORQUED BEFORE SOLDERING.

NOTE 10: INSERT C13 INTO ETCH PAD HOLES CONNECTED TO J1 TERMINALS 2-3.

NOTES:

3. R14 - 200Ω VARIABLE IN THIS LOCATION DELETED ONLY FOR YA VARIATION.
4. ITEMS #79, 80, 81 ADDED ONLY FOR YA VARIATION.
5. ITEM #57A ADDED ONLY FOR YA VARIATION.
6. RELOCATING D8 AND ADDITION OF D9 ONLY FOR YA VARIATION.
7. USE D9 IN YA VARIATION ONLY.

* SEE NOTE 7

"DETAIL A"

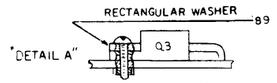

1	1	R22	RES 680 1/4W 5%	1301424	69	0	1
1	1		PACKING INSTRUCTIONS	API 3700074-0001	70	2	2
1	1		SCR, PHL PAN HD #6-32 x 5/8 LG	9006025-1	71	7	7
1	Ø	F1	15 VOLT LAMP	1207169	72	6	6
4	4		LOCKWASHER #10 INT	9006038	73	1	1
AR	AR		PERMANENT MARKER	9001852	74	AR	AR
AR	AR		FLT TUBING	9107302-111	75	1	1
AR	AR		FLT TUBING	9107302-211	76	1	1
1	1	Q4	TRANSISTOR 2N6235	1500335	77	1	1
AR	AR		SHRINK SLEEVING	9107302-09	78	1	1
1	Ø	12 IN.	WIRE, MICRODOT	1700014	79	1	1
1	Ø		CLAMP, CABLE	9007079	80	2	2
1	Ø	R14	POT, 10 TURN, 1KΩ	1309532-04	81	1	1
1	Ø	R17	RES, 300Ω 1/4 W 5%	1301425	82	1	1
1	Ø	R18	RES, 150Ω 1/4 W 5%	1300250	83	1	1
1	Ø	R4	RES, 36Ω 5W 3%	1310870-02	84	P	P
1	Ø	D3	DIODE ZENER 1N754	1109991	85	2	2
1	1	-	DECAL (H744)	ADX-7410745-1	0.96	1	1
			WASHER, RECTANGULAR	9009765	89	1	1
			RES 10 1/4W 5% FUSIBLE	1313796	86	1	1
		R13	CAP .22MF 50V	1010274	87	1	1
		C7	WASHER INT TOOTH #4	9006632	88	6	6

QTY	QTY	REF DESIGNATION	DESCRIPTION	PART NO.	ITEM NO.
1	1		5 VOLT LAMP	12-03619-1	68
1	1		L WASHER #4	9006632	67
1	1		NUT KEPS #4	9006597	66
1	1		SCR P.H. PAN HD #4-40 x 3/16 LG	9008033-1	65
1	1		HEAT SINK BRIDGE	1210907	64
AR	AR		COMPOUND THERMAL JOINT	9008268	63
1	1	R26	RESISTOR 1.5K 1/4W 5%	1300391	62
1	1	R19	RESISTOR 7.5K 1/4W 1%	1305322	61
1	1	R3	RESISTOR 12K 1/4W 5%	1300488	60
1	1	Q7	TRANSISTOR, UNIJUNCTION 2N6028	1510877	59
1	1		SCR PHL PAN HD #6-32 X 1/4 LG	9006020-1	58
1	1		COVER	C-MD-5309760-0001	57
1	1		SCR PHL FLT HD #6-32 x 3/16 LG	9008320-2	56
1	1		WASHER, LOCK #6	9006033	55
4	4		SCR PHL FLT HD #2-56 x 1/4 LG	9008020-2	54
1	P		CONTACT, FEMALE	1209956	53
2	2		STRAP, CAPACITOR	C-MD-5309759-0001	52
1	1		BRACKET, REGULATOR	D-BA-5309756-0001	51
1	1		HOLDER, CAPACITOR 2.5	C-HA-123380-0001	50
1	1		HEAT SINK REGULATOR	D-PS-5103731-0001	49
2	2	C9, C12	CAP 56 PF	1000012	48
1	1	R24	RESISTOR 10 1W	1300171	47
1	1	L1	REACTOR 60 MHY MMC 4247	1610850	46
2	2		SCR, PHL PAN HD #4-40 1/4 LG	9008331-1	45
3	3		WASHER, INSULATOR	9006721	44
3	3		NUT, KEPS #6-32	9006186	43
4	4		SCR #10-32 X 3/4 SLOTTED PAN HD	9009659-01	42
1	1	F1	FUSE 15 AMP	1213237-01	41
2	2		FUSE CLIP	9007203	40
6	6		EYELET .25-4-5	9001000	39
1	1	J1	MATE-N-LOCK CONN. 6 PIN	1209340	38
1	1	E1	INTEGRATED CIRCUIT DEL-723C	1910415	37
1	1	Q5	TRANSISTOR A05	1510705	36
1	1	Q3	TRANSISTOR D45H8	1510708-1	35
3	3	Q1, Q6, Q4	TRANSISTOR MPSA55 MOT	1510706	34
1	1	Q2	TRANSISTOR 2N5302	1510196	33
Ø	1	R14	RES VARIABLE 200	1312852	32
1	1	R21	RES 5.1 1/4W 5%	1309422	31
1	1	R23	RES 100 1/4W 5%	1300229	30
1	1		SCR, PPH #4-40 x 1/8	9006011-1	29
1	1	R11	RES 27 1/4W 10%	1301420	28
Ø	1	R17	RES 750 1/8W 1%	1302955	27
1	1	R9	RES 27 1/4W 5%	1301522	26
1	1	R7	RES 18.2K 1/8W 1%	1309462	25
2	2	R8, R16	RES 1K 1/4W 5%	1300365	24
Ø	1	R18	RES 511 1/8W 1%	1302411	23
1	1	R25	RES 18K 1/4W 5%	1302465	22
2	2	R6, R15	RES 10K 1/4W 5%	1300477	21
Ø	1	R4	RES .02 5W 3%	1310876	20
1	1	R2	RES 820 1W 10%	1300358	19
1	1	R1	RES 3.9K 1W 10%	1302627	18
1	1	R5	RES 10 1/4W 5%	1301317	17
2	2	R12, R10	RES 150 1/4W 5%	1300250	16
Ø	1	D3	DIODE ZENER 1 MA. 5.1V	1109925	15
1	1	D7	SCR MCR 6499P-2	1109465	14
4	4		SCR, PPH #4-40 x 5/16 LG SEMS	9009141	13
1	1	D5	DIODE PWR NSR 8117	1110715	12
3	2	D4, D8 D9 *	DIODE PWR D664	1100114	11
1	1	D2	DIODE ZENER IN4744	1105648	10
1	1	D1	DIODE BRIDGE	1110714	9
2	2	C8, C9	CAP 6 KMF 10V	1010704	8
1	1	C1	CAP 31 KMF 50V	1010858	7
2	2	C4,3	CAP .05MF 25V	1001774	6
1	1	C2	CAP .033 MF 100V 10%	1000050	5
1	1	C11	CAP 270 OPF 100V 5% DM	1001637	4
2	2	C10, C13	CAP .01 MF 100V 20% DISC	1001610	3
1	1	C6	CAP 2.2 UF, 20V, TA	1002627	2
1	1		ETCHED CIRCUIT BOARD	5009725	1
			ASSY/DRILLING HOLE LAYOUT	D-AH-H744-0-5	
			X-Y COORDINATE HOLE LOCATION	X-Y H744-0-0	REF
			MODULE ECO HISTORY	D-HH-744-0-0	REF
			CIRCUIT SCHEMATIC	D-SH-H744-0-1	

QTY	QTY	REF DESIGNATION	DESCRIPTION	PART NO.	ITEM NO.

MA 723C	7 12
IC TYPE	GND +5V
GND AND 5V ARE USUALLY PIN 7 AND 14 RESPECTIVELY EXCEPTIONS ARE STATED ABOVE	
IC PIN LOCATIONS	

ITEM NO	ASSG	FROM PT	TO PT
JUMPER LIST			

FIRST USED ON OPTION D-UA-H742A-0-0

D664	1N3606
IN4744	

ECO NO. | ECO NO. | ECO NO. | ECO NO.

ETCH BOARD REV H

PARTS LIST

EQUIPMENT CORPORATION

TITLE: 5V REGULATOR

744-0-0 Y

H744-0-0-B

B

digital EQUIPMENT CORPORATION MAYNARD MASSACHUSETTS

DRAWING DIRECTORY

"THIS DRAWING AND SPECIFICATIONS, HEREIN, ARE THE PROPERTY OF DIGITAL EQUIPMENT CORPORATION AND SHALL NOT BE REPRODUCED OR COPIED OR USED IN WHOLE OR IN PART AS THE BASIS FOR THE MANUFACTURE OR SALE OF ITEMS WITHOUT WRITTEN PERMISSION. COPYRIGHT © , DIGITAL EQUIPMENT CORPORATION"

CUSTOMER PRINT SET INDEX

THIS IS PRINT SET

	SEQUENCE		SEQUENCE
DRAWING DIRECTORY	B-DD-H745-Ø	MFG. SET	
CIRCUIT SCHEMATIC	D-CS-H745-Ø-1	TEST PROCEDURE	A-SP-11/45 TA-2
UNIT ASS'Y	E-UA-H745-Ø-Ø	MFG. SPEC.	A-SP-H745 Ø 8
		PACKAGING INSTRUCTION	A-PI-3700074 0-0

UNIT VARIATIONS

VAR	TITLE	PRINT SET H745-1
H745	-15V REGULATOR	X

REVISIONS

DATE	CHG. NO.	REV
	H745-16	K
	H745-17	L
	H745-18	M
9-76	H745-19	N
10-76	H745-20	P

USED ON OPTION/MODEL	
11/45	

SHEET 1 OF 2

		DATE
DRN.	D FONTAINE	2-7-72
CHK'D.	J GAUDETTE	2-17-72
PROJ ENG.	G POTTER	2-25-72
PROD.	A HUSCH	2-25-72
FIELD SERV.	A. ZINS	2-25-72

TITLE: -15V REGULATOR

SIZE	CODE	NUMBER	REV
B	DD	H745-Ø	P

DIST

DEC 16-(3?1)-1062-1A-R972

DRB 106

162

ELECTRICAL

CUSTOMER PRINT SET H745-1	MFG SET	FIND NO.	DRAWING NO.	REV	NO OF SHT	DESCRIPTION	OPTION NO.
X		1	D-CS-H745-Ø-1	[illegible]	1	CIRCUIT SCHEMATIC	H745
	X		A-SP-11/45-TA-2			TEST PROCEDURE	H745
	X		A-SP-H745-Ø-8			MFG SPEC	H745
			D-AH-H745-0-5				
			B-MH-H745-0-6				

MECHANICAL

CUSTOMER PRINT SET H745-1	MFG SET	FIND NO.	DRAWING NO.	REV	NO OF SHT	DESCRIPTION	OPTION NO.
X		1	E-UA-H745-Ø-Ø	[illegible]	1	UNIT ASSY	H745
			D-PS-1210737-0-0		1	HEAT SINK	H745
			D-IA-5309756-0-0		1	REGULATOR BRKT	H745
			D-IA-5309761-0-0		1	2 - 5 CAP BRKT	H745
			C-MD-5309759-0-0		1	CAPACITOR STRAP	H745
		2	A-PI-3700074-0-0	-	2	PACKAGING INSTRUCTIONS	H745
			A-PS-9905211-0-0	-	2	OUTER CARTON	H745
			A-PS-9905212-0-0	-	2	INNER PACKAGE	H745

TITLE		SIZE	CODE	NUMBER	REV
-15V REGULATOR	SHEET 2 OF 2	B	DD	H745-Ø	[illegible]

DRB 108

DEC 16—(325)—1062—2—N871

This drawing and specifications, herein, are the property of Digital Equipment Corporation and shall not be reproduced or copied or used in whole or in part as the basis for the manufacture or sale of items without written permission. COPYRIGHT © 1976
DIGITAL EQUIP. CORP., MAYNARD, MASS.

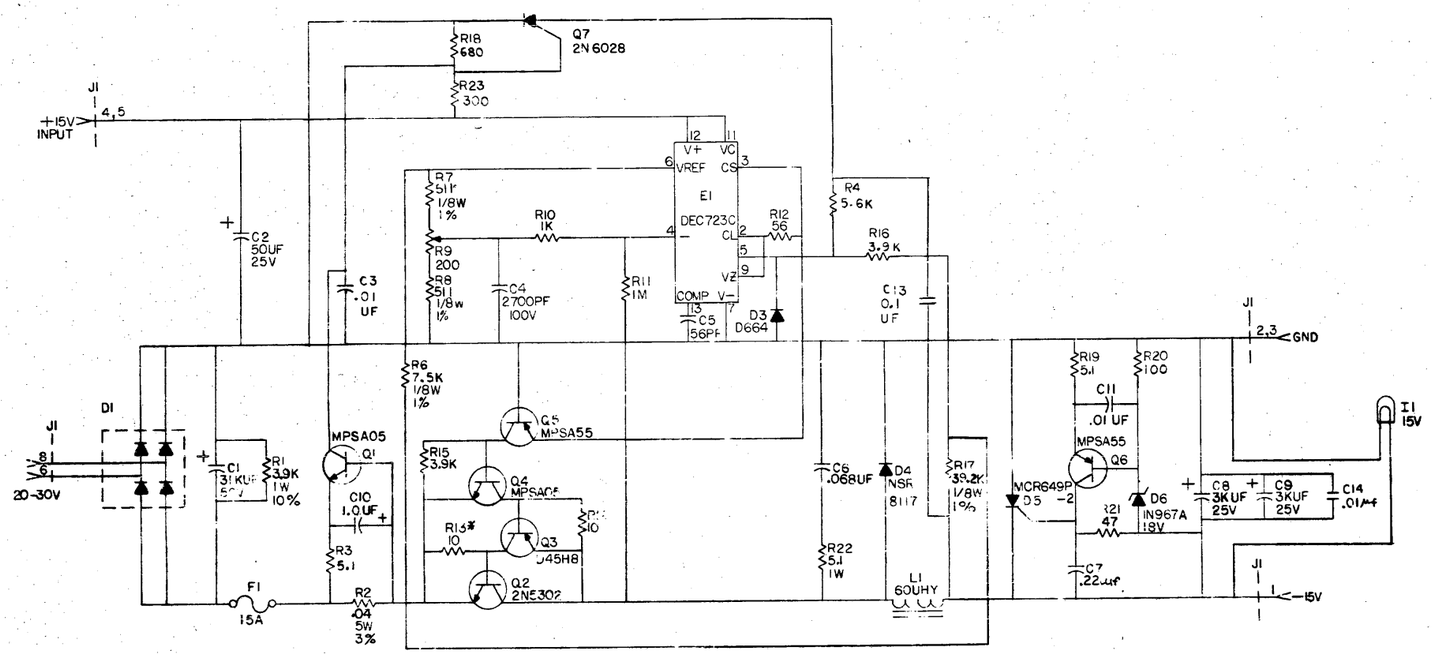

* FUSIBLE
UNLESS OTHERWISE INDICATED:
RESISTORS = 1/4W, 5%

QTY	REF DESIGNATION	DESCRIPTION	PART NO.	ITEM NO.

PARTS LIST

ETCH BOARD REV E

DEC NO.	EIA NO.	DEC NO.	EIA NO.
D664	IN 3606	D45H8	
NSR 8117		2N 6028	
MCR 649P − 2			
IN 967A	SAME		
2N 5302			
MPS A05			
MPS A55			

SEMICONDUCTOR CONVERSION CHART

REVISIONS

CHK	CHANGE NO.	REV
	H745-00001	C
	H745-00002 2A	D
	H745-00003 3A	E
	H745-00004	F
	H745-00005	H
	H745-00006	J
	H745-00007	K
	H745-00009	L
	H745-00011	M
	H745-00012	N
	H745-00013	P
	H745-00014	R
	H745-00015	S
	H745-00016	T
	H745-00017	U
	H745-00018	V
	H745-00019	W
	H745-00020	Y

DRN. Roger J. Poulette DATE 11-4-71
CHK'D. NANCY MOORE DATE 1-4-71
ENG. DATE 1/11/72
PROJ. ENG. DATE 1/11/72
PROD. DATE 1/13/72
NEXT HIGHER ASSY
SCALE
SHEET 1 OF 1

digital EQUIPMENT CORPORATION MAYNARD, MASSACHUSETTS

TITLE −15V REG.

SIZE D CODE CS NUMBER H745-Ø-1 REV Y

DIST.

SIZE D CODE CS NUMBER H745-Ø-1 REV Y

DEC FORM NO. DRD-138

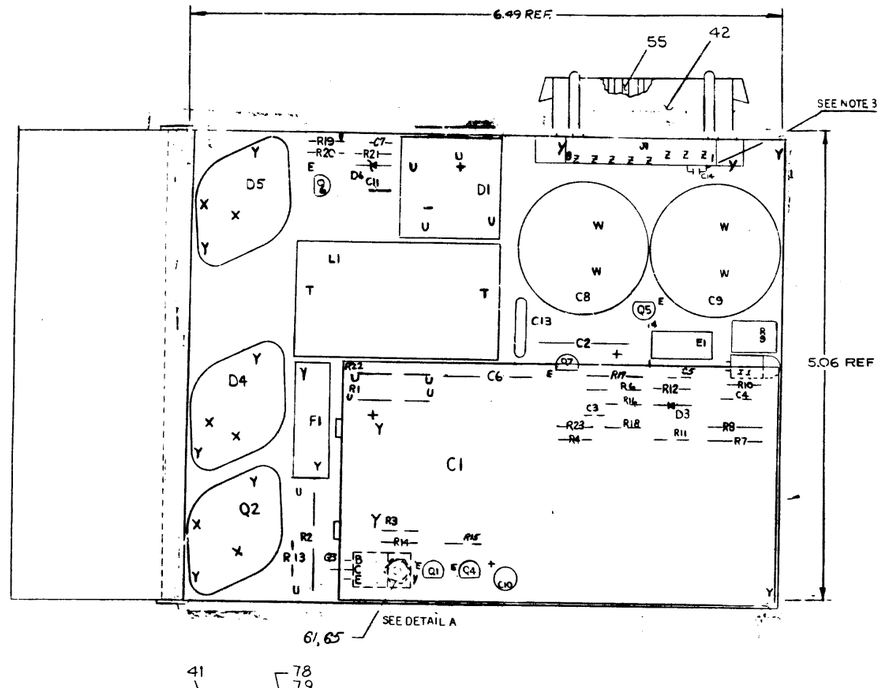

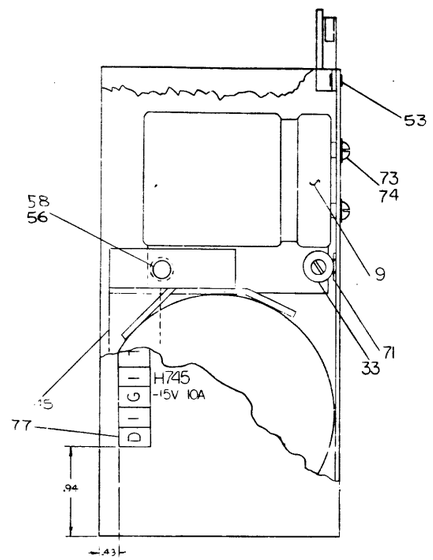

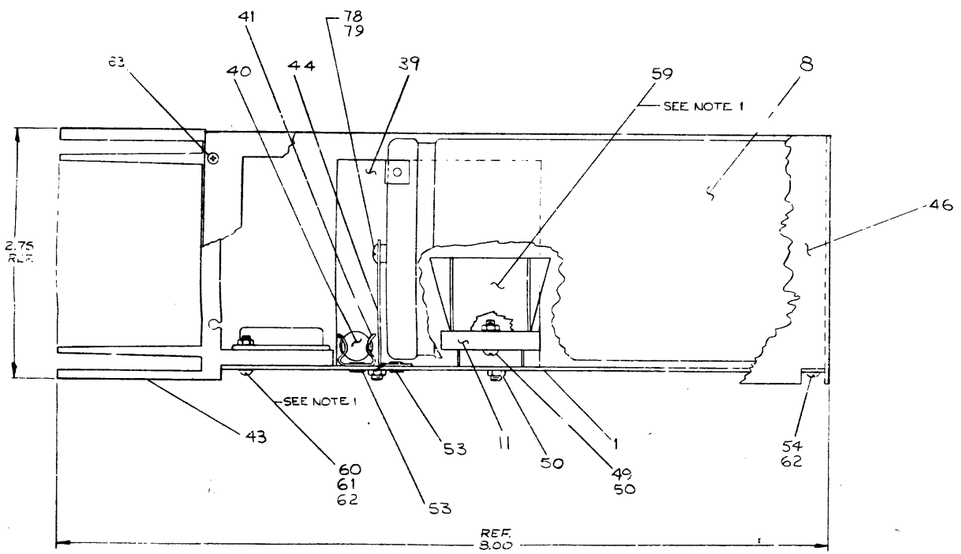

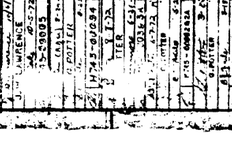

NOTE:
3. INSERT C14 INTO ETCH PAD HOLES CONNECTED TO J1 TERMINALS 1-2.

NOTE 4:
Q3 SCREW HEAD SHOULD BE ON TOP OF FLAT RECTANGULAR WASHER AS SHOWN. APPLY 6 INCH LBS. OF TORQUE WHEN SECURING Q3 TO CKT. BOARD BEFORE SOLDERING.

NOTE 5: TORQUE APPLICATION
(1) APPLY 12 INCH LBS. OF TORQUE TO ALL #4 HARDWARE EXCEPT Q3.
(2) APPLY 16 INCH LBS. OF TORQUE TO ALL #6 AND #10 HARDWARE.
(3) ALL HARDWARE TO BE TORQUED BEFORE SOLDERING.

NOTE:
1. APPLY ITEM #51 (THERMAL COMPOUND) BETWEEN TRANSISTOR AND INSULATOR, WASHER (ITEM #52 ALSO BETWEEN WASHER & HEAT SINK FOR QR, Q4 & D5 ALSO APPLY ITEM #51 (COMPOUND) BETWEEN ITEM #11 (DIODE BRIDGE AND ITEM #59 (HEAT SINK).
2. 1010621 MAY BE SUBSTITUTED FOR C13 (1000030).

QTY.	REF DESIGNATION	DESCRIPTION	PART NO.	BOM
		ASSY DRILLING HOLE LAYOUT	D-AM-H745-0-5	70
1		PACKING INSTRUCTIONS	API-3700076-0-0	69
1	R18	RES 680 ¼W 5%	1301424	68
1	R23	RES 300 ¼W 5%	1301424	67
1	C13 (SEE NOTE 2)	CAP 0.1 UF 100V 20%	1000030	66
1		SCR PH 8#4-40 X 5/16 LG	9008080-1	65
1	I1	LAMP 15V	1209169	64
4		SCR, PF11 #4 X 5/16 LG, SELF TAPPING	9009842	63
8		L WASHER #4	9008832	62
7		NUT KEPS #4-40	9008057	61
8		SCR PHL PAN HD #4-40 X [illegible] LG	[illegible]	60
1		HEAT SINK BRIDGE RECT	1210807	59
1		SCR PHL PAN HD #6-32 X [illegible] LG	9008020-1	58
1		SCR PHL FLT HD #8-32 X 1/4 LG	9006020-02	57
1		WASHER LOCK #6	9006633	56
8		CONTACT FEMALE	1208456	55
2		SCR PHL PAN HD#4-40 X 3/16 LG	9008301-1	54
6		EYELET [illegible]	9006000	53
3		INSULATOR WASHER	9008721	52
A.R		THERMAL COMPOUND	9009288	51
3		NUT KEPS 8-32	9008195	50
1		SCREW PHL PAN HD 8-32 X 5/8 LG	9006025-01	49
4		[illegible]	[illegible]	48
1		[illegible]	[illegible]	47
1		REGULATOR BRKT	D-IA-5309758-0-0	46
1		2.5 HOLDER CAPACITOR	C-IA-74 238-4/0	45
2		STRAP CAPACITOR	C-MD-5309758-0-0	44
1		HEAT SINK	D-PS-12107-1-0-0	43
1	J1	TERM STRIP—MALE 8 PIN	1208360	42
2		FUSE CLIP	9007201	41
1	F1	FUSE	1213237-01	40
1	L1	REACTOR 80 UHY	1810850	39
1	E1	INTEGRATED CIRCUIT UA723C	1310415	38
1	Q3	TRANSISTOR D43H8	1510708	37
2	Q5 Q8	TRANSISTOR 2N55	1510708	36
2	Q1, Q4	TRANSISTOR 2N5	1510705	35
1	Q2	TRANSISTOR 2N5302	1510838	34
1	R8	RES VARIABLE 200 Ω 20%	1310852	33
1	R20	RES 100Ω ½W 5%	1300229	32
1	R11	RES 1 MEG ¼W 5%	1302595	31
1	R4	RES. 6.6 K ¼w 5%	[illegible] 874	30
2	R15, R16	RES 3 8K ¼W 5%	1300444	29
2	R19, R3	RES 5.1 ¼W 5%	1300472	28
1	R12	RES 56 ¼W 5%	1302802	27
1	R21	RES 47 ¼W 5%	1300202	26
1	R17	RES 30.2K ¼w 1%	1305765	25
1	R10	RES 1K ¼W 5%	1302385	24
1	R14	RES 10Ω ¼W 5%	1301217	23
1	R6	RES 7.5K 1/8W 1%	1305322	22
2	R7, R8	RES 511 1/8W 1%	1309241	21
1	R22	RES 5.1 1Ω 5%	1302138	20
[illegible]	[illegible]	[illegible]	[illegible]	19
1	R2	RES .04 5W 3%	1311362-00	18
1	R1	RES 3 8K 1Ω 10%	1302927	17
1	D8	DIODE RECT	[illegible]	16
1	Q6	SCR MCR64MP-2	1120485	15
1	Q4	DIODE MR8811	1110715	14
2	D5	DIODE D864	1100114	13
1	Q7	TRANSISTOR UNI JUNCTION 2N6028	1510977	12
1	J1	DIODE RECT	1110714	11
2	C6 C7	CAP [illegible]	[illegible]	10
2	C8 C9	CAP 3.0K UF 25V	1010703	9
1	C1	CAP 31K UF 50V	1010856	8
1	C10	CAP 1.0 UF 25V	1010866-01	7
1	C2	CAP 50 UF 25V -10+75%	1001238	6
1	C8	CAP 008 UF 100V 10%	1000052	5
1	C4	CAP 2700PF 100V 5%	1001837	4
3	C11, C5, C14	CAP .01F 100V 20%	1001810	3
1	R5	[illegible]	[illegible]	2
[illegible]	[illegible]	[illegible]	[illegible]	1
QTY.	REF DESIGNATION	DESCRIPTION	PART NO.	BOM

PARTS LIST

1		DECAL (H745)	7416945-02
2		WASHER INT. TOOTH #10	9006635
2		SCREW PAN 10-32 3/16 LG	9009669-01
1	C7	CAP .22 UF 50V	1010274
1		WASHER, RECTANGULAR	9003769
1	R13	RES 10Ω ¼W FUSIBLE	1312496-00
4		LOCKWASHER #10 INT	9006635
4		SCR #10-32X.31 SLOTTED PAN HD.	9009669-01
1		TRANSIPAD	9008206

79				
78				
77				
76				
75				
74				
73				
72				
71				

EYER BOARD REV E

DEC NO.	EIA NO.	DEC NO.	EIA NO.

SEMICONDUCTOR CONVERSION CHART

IC TYPE | GND | VCC

IC PIN LOCATIONS

ITEM NO	PRINT PT	PRINT PT	TO PT

EQUIPMENT CORPORATION

-15 REGULATOR

E | IA | H745-0-0 | Y

H745-0-0

digital EQUIPMENT CORPORATION MAYNARD MASSACHUSETTS

DRAWING DIRECTORY

"THIS DRAWING AND SPECIFICATIONS, HEREIN, ARE THE PROPERTY OF DIGITAL EQUIPMENT CORPORATION AND SHALL NOT BE REPRODUCED OR COPIED OR USED IN WHOLE OR IN PART AS THE BASIS FOR THE MANUFACTURE OR SALE OF ITEMS WITHOUT WRITTEN PERMISSION. COPYRIGHT © 1974, DIGITAL EQUIPMENT CORPORATION"

CUSTOMER PRINT SET INDEX

THIS IS PRINT SET ☐☐☐☐

SEQUENCE		SEQUENCE	
DRAWING DIRECTORY	B-DD-H754-Ø		
+20 VOLT REGULATOR	E-CS-H754-0-1		

UNIT VARIATIONS

VAR	TITLE	PRINT SET 1
H754-0	+20 VOLT REGULATOR	X

REVISIONS		
DATE	CHG. NO.	REV
10-75	H754-9	A
11-3	H754-10	B

USED ON OPTION/MODEL

SHEET 1 OF 3

DRN. J.Fleming	DATE 2/21/74	TITLE: +20 VOLT REGULATOR
CHK'D. J.Fleming	DATE 2/21/74	
PROJ ENG. E. Williams	DATE 3-13-74	
PROD. Jack Downes	DATE 3-19-74	SIZE B · CODE DD · NUMBER H754-Ø · REV B
FIELD SERV. Walt Andrea	DATE 7/25/74	DIST

DRB 106

ELECTRICAL

CUSTOMER PRINT SET 1	MFG. SET	FIND NO.	DRAWING NO.	REV	NO OF SHT	DESCRIPTION	OPTION NO./FILE DATE
X		1	B-DD-H754-Ø	#	3	DRAWING DIRECTORY	
X			E-CS-H754-Ø-1	#	2	+20 VOLT REGULATOR	
			K-CC-H754-Ø-4		-	X-Y COORDINATE HOLE LOCATION	
			D-AH-H754-Ø-5		1	ASSY/DRILLING HOLE LAYOUT	
			B-MH-H754-Ø-6		1	MODULE ECO HISTORY	
			5010531		-	ETCHED CIRCUIT BOARD	
			A-SP-H754-Ø-8		3	MANUFACTURING SPEC	

MECHANICAL

CUSTOMER PRINT SET 1	MFG SET	FIND NO.	DRAWING NO.	REV	NO OF SHT	DESCRIPTION	OPTION NO./FILE DATE
X		1	E-CS-H754-0-1	#	2	+20 VOLT REGULATOR	
			D-PS-1210737-0-0		1	HEAT SINK REGULATOR	
			C-IA-5309758-0-0		1	CAPACITOR BRACKET	
		2	D-IA-5409756-0-0		1	BRACKET REGULATOR	
			A-SS-5309756-0-1		1	SILK SCREEN	
			A-SS-5309756-0-2		1	SILK SCREEN	
			A-SS-5309756-0-3		1	SILK SCREEN	

CUSTOMER PRINT SET CODES

X = PRINT OF DOCUMENT INCLUDED IN PRINT SET
C = INCLUDES ALL PRINTS INDICATED ON DOCUMENT
S = CONFIDENTIAL AUTHORIZED SIGNATURE REQUIRED

TITLE	SHEET	SIZE	CODE	NUMBER	REV
+20 VOLT REGULATOR	2 OF 3	B	DD	H754-Ø	B

DPB 108

DEC 10-(325)-1062-2B-R872

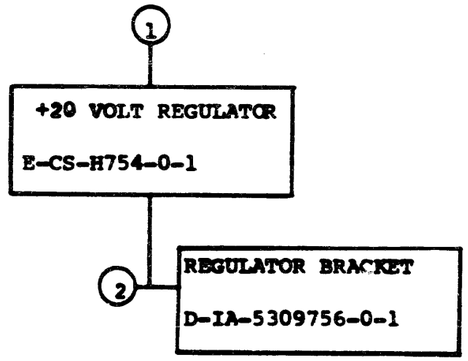

TITLE	SHEET	SIZE	CODE	NUMBER	REV
+20 VOLT REGULATOR	3 OF 3	B	DD	H754-Ø	B

DRB 107

68

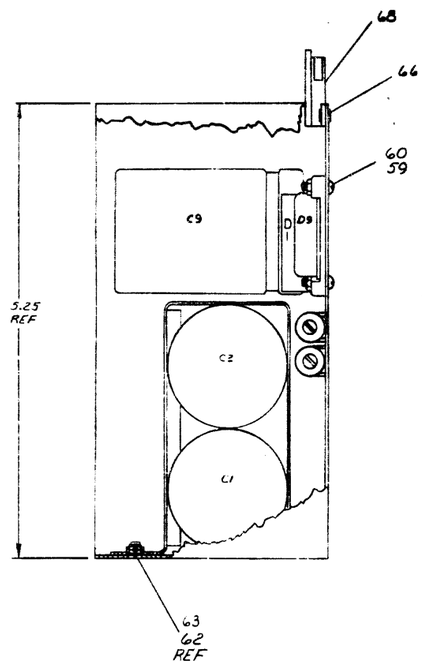

NOTES:

1. APPLY ITEM # 71 (COMPOUND) ON BOTH SIDES OF ITEM # 72 (INSULATOR WASHER) FOR Q2, Q9, Q10. ALSO APPLY BETWEEN ITEM # 11 (DIODE BRIDGE D1). AND ITEM # 65 (HEAT SINK, BRIDGE RECT.)
2. UNLESS OTHERWISE INDICATED: RESISTORS ARE 1/4 W, 5%. CAPACITORS ARE 100 V, 20%.
3. ADD INSULATION [illegible] TO BOTH LEADS OF R30 & R31.

QTY	REF DESIGNATION	DESCRIPTION	PART NO.	ITEM
1	R13	RES. 27Ω 1 AW 5% FUSIBLE	[illegible]-01	10
AR		INSULATION	[illegible]-11	11
1	R39	RES 330 1/4W 5%	[illegible]	12
1	R37	RES. 1 10W 5%	[illegible]	13
1	R38	RESIS W THERMISTOR	[illegible]	14
1	C13	CAP. 1000μF 35V	[illegible]	15
1	Q10	TRANSISTOR MJ900	[illegible]	16
1	Q9	TRANSISTOR MJ3040	[illegible]	17
1	C12	CAP. 100 MF. 50V ± 2% DM	[illegible]	18
2	Q4, Q14	TRANSISTOR MPS A05	[illegible]	19
1	D5	DIODE 1N09	[illegible]	20
2	(Under as I req)	TRANSPAD	[illegible]	21
1	R31	RES 1.5Ω 5W 10%	[illegible]	22
8	CR, C17	CAP, 1000 PF 100V, 5% DM	[illegible]	23
1	R32	RES 385Ω 1/8W 1%	[illegible]	24
2	R35, R8	RES 1.78K 1/8W 1%	[illegible]	25
1	R11	RES 15K 1/4 WT 5%	[illegible]	26
1	R20	RES 470Ω 1/4 WT 5%	[illegible]	27
3		WASHER INSULATOR	[illegible]	72
A/R		COMPOUND THERMAL	[illegible]	71
A/R		WIRE, TINNED STRANDED 22G (SOLID)	[illegible]	70
A/R		SOLDER 60/40 (SN/PB) .125 DIA (SOLID)	[illegible]	69
1	J1	MATE-N-LOCK CONN 8 PIN	[illegible]	68
8		TERMINAL	[illegible]	67
4		EYELET DIA 4.7	[illegible]	66
1		HEAT SINK BRIDGE RECT.	[illegible]	65
1		SCR PHL PAN HD 8-32 X [illegible]	[illegible]	64
5		NUTS HUT 8-32	[illegible]	63
2		SCR PHL FLAT HD 8-32 X 5/16	[illegible]	62
2			[illegible]	61
1		SCR PHL PAN HD 4-40 X 3/8	[illegible]	60
10		NUTS HUT 4-40	[illegible]	59
6		SCR PHL PAN HD 4-40 X [illegible]	[illegible]	58
4		TERMINAL	5007830	57
1		[illegible]	[illegible]	56
1		1.5 CAP. UNIT	C-14-5398758-8-0	55
1		HEAT SINK REGULATOR	D-PS-12187J1-8-0	54
1		BRACKET REG	D-A-5398738-4-5	53
4		SPLIT LUG	[illegible]	52
1	Q8	TRANSISTOR 2N6029	[illegible]	51
2		FUSE CLIP	5007200	50
1	F1	FUSE 2.5 AMP	[illegible]	49
1	L1	REACTOR	[illegible]	48
1	E1	INTEGRATED CIRCUIT 723	[illegible]	47
6	Q1,Q6,Q11,Q12, Q13	TRANSISTOR [illegible]	[illegible]	46
4		SCR PHL FLAT HD [illegible]	[illegible]	45
1	Q3	TRANSISTOR 2N2905	[illegible]	44
1	Q7	TRANSISTOR 2N6028	[illegible]	43
2	Q1, Q2	TRANSISTOR 2N6028	[illegible]	42
1	R17, R21	RES VARIABLE 200Ω 5% C.A. POT	[illegible]	41
2	R23, R36	RES 5.1Ω 5%	[illegible]	40
1	R18	RES 237 1/8W 1%	[illegible]	39
				38
2	R14, R5	RES 2Ω 5% 2T	[illegible]	37
	R10	RES 150 Ω 5%	[illegible]	36
REF		ASSY/DRILLING HOLE LAYOUT	D-AH-11756-0-0	35
2	R7, R40	RES 2K 1/4W 5%	1083308	34
2	R6, R19	RES 10K Ω 5%	[illegible]	33
6	R15 R28, R30, R24, R25, R41	RES 100 Ω 5%	[illegible]	32
1	R12	RES 68.1Ω 1/4W 1% FUSIBLE	1314962	31
				30
1	R27	RES 10K Ω 1/2W 1%	1083312	29
1	R32	RESISTOR 385Ω 1%	[illegible]	28
1	R16	RES 287Ω 1/8 W 1%	[illegible]	27
1	R29	RES 10K Ω 5%	[illegible]	26
1	C11	CAP 2.2 UF 35V 10% TANT	[illegible]	25
1	R4	RES 59.7 0.4%	1311362	24
1	R3	RES 1.96K 5W 5%	[illegible]	23
1	R34	RES 47.2Ω 5%	[illegible]	22
1	R26	RES 1 5K 1/8 5%	[illegible]	21
2	R1, R2	RES 3 9K 1/8 10%	[illegible]	20
1	R28	RES 10K Ω 1/4W 5%	1311317	19
2	D11,D8	DIODE 1N5624	1110420	18
				17
1	D26	DIODE 78ZA ZENER	[illegible]	16
1	D3	DIODE MDA 940 P 2	[illegible]	15
1	D7	DIODE 1N6298 24V	[illegible]	14
1	D6	DIODE 20 AMP FAST REC	[illegible]	13
1	D9	DIODE 1N6746 ZENER 15V	[illegible]	12
1	D4	DIODE MDA 3044	[illegible]	11
3	D9, D13 D4	DIODE 1N914	[illegible]	10
1	C15	CAP 1 UF 100V 20% DISC	1000030	9
1	C8	CAP 2.2 UF 35V 6% AL. EL.	[illegible]	8
5	C7, C8, C9, C10, C2	CAP .1 UF 50V 20% DISC.	[illegible]-01	7
1	C6	CAP 2700PF 100V 5% DM	[illegible]	6
1	C5	CAP 330PF 100V 5% DM	[illegible]	5
1	J1	LAMP, 28V, 40 MA	12-112.39	4
	C12	CAP .1 UF 20% DISC	[illegible]	3
2	C1, C2	CAP 2.2 UF 50V 6% AL. EL.	[illegible]	2
1		ETCHED CIRCUIT BOARD	[illegible]	1
		MANUAL ECO REVISION	D-AH-11756-0-5	REF
		1.1 CAPACITOR, POLE LOCATION	A-CO-11756-0-9	REF

PARTS LIST

ECO# D664 DWG# 1N3606

[redacted] EQUIPMENT CORPORATION

TITLE: +20 VOLT REGULATOR

SIZE B | 11756-1 | REV N

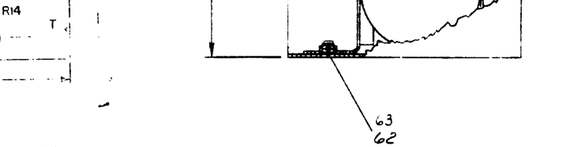

DETAIL A
SCALE: NONE
RED WIRE GOES TO POSITIVE TERMINAL
BLK WIRE GOES TO NEGATIVE TERMINAL

DELETED COMPONENTS	
RESISTORS	R9
DIODES	D10, D2

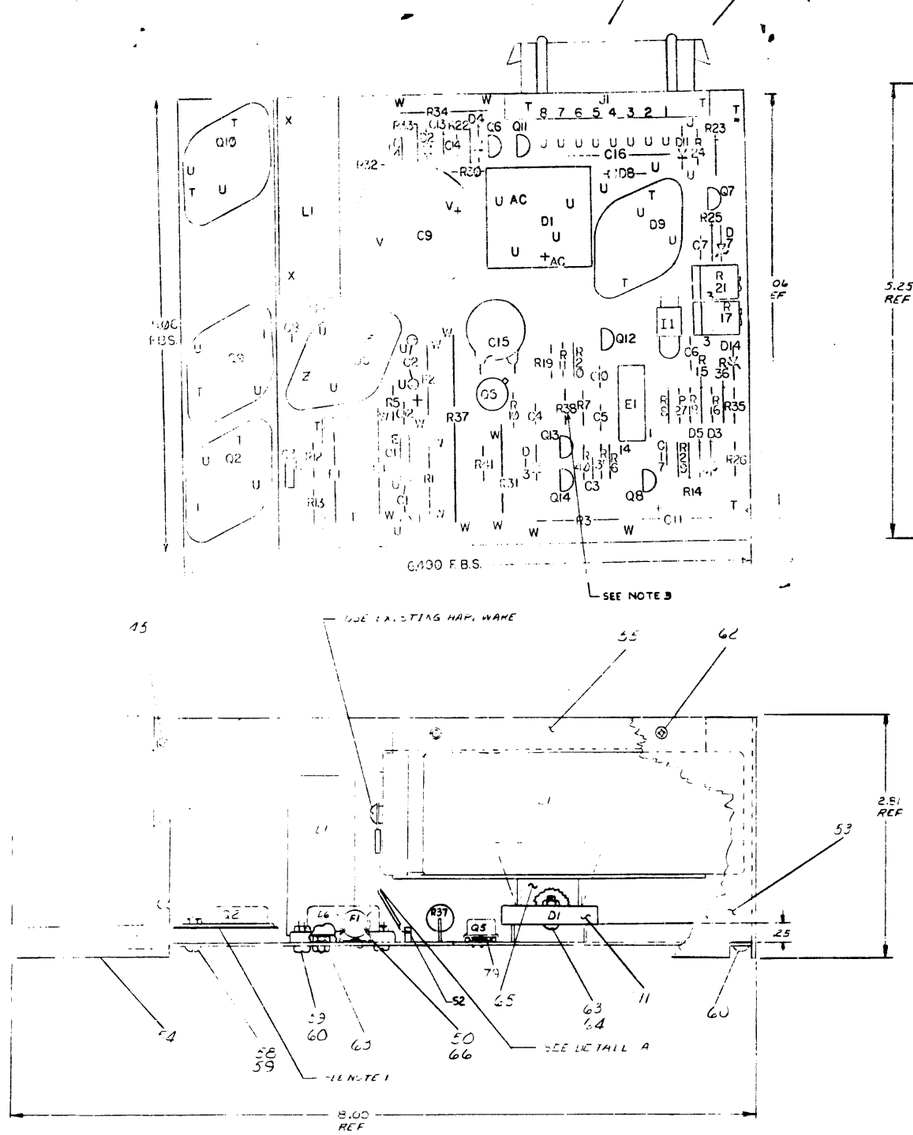

COPYRIGHT © 1972 DIGITAL EQUIPMENT CORPORATION

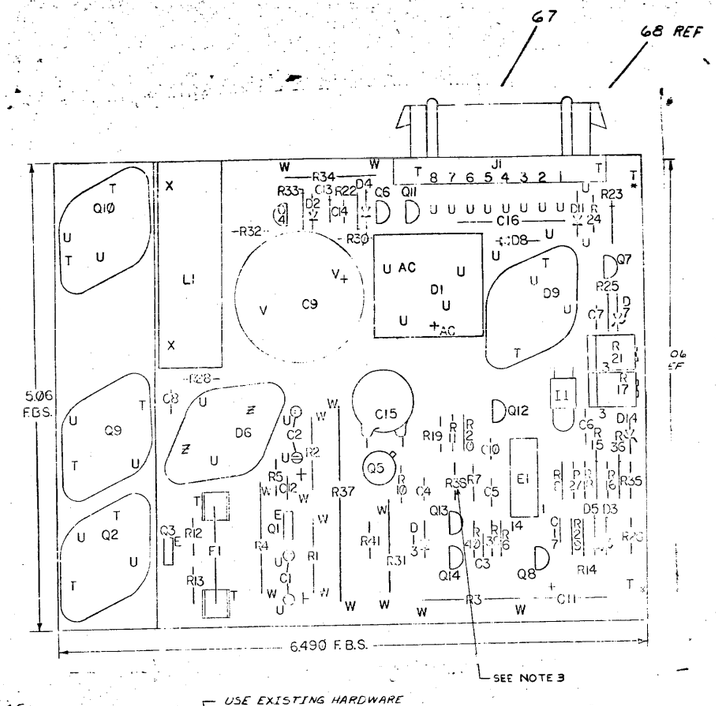

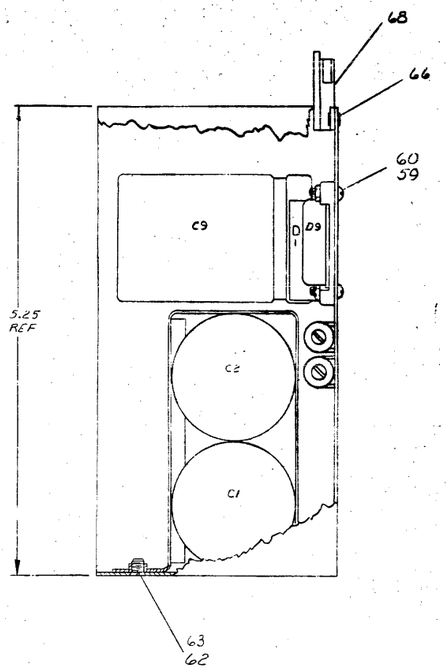

NOTES:
1. APPLY ITEM # 71 (COMPOUND) ON BOTH SIDES OF ITEM #72 (INSULATOR WASHER) FOR Q8, Q9, Q10. ALSO APPLY BETWEEN ITEM # 11 (DIODE BRIDGE D1). AND ITEM # 65 (HEAT SINK, BRIDGE RECT.)
2. UNLESS OTHERWISE INDICATED: RESISTORS ARE 1/4 W, ±5%. CAPACITORS ARE 100 V, ±5%.
3. ADD INSULATION (9107256-11) TO BOTH LEADS OF R38 TO AVOID SHORT TO ETCH.

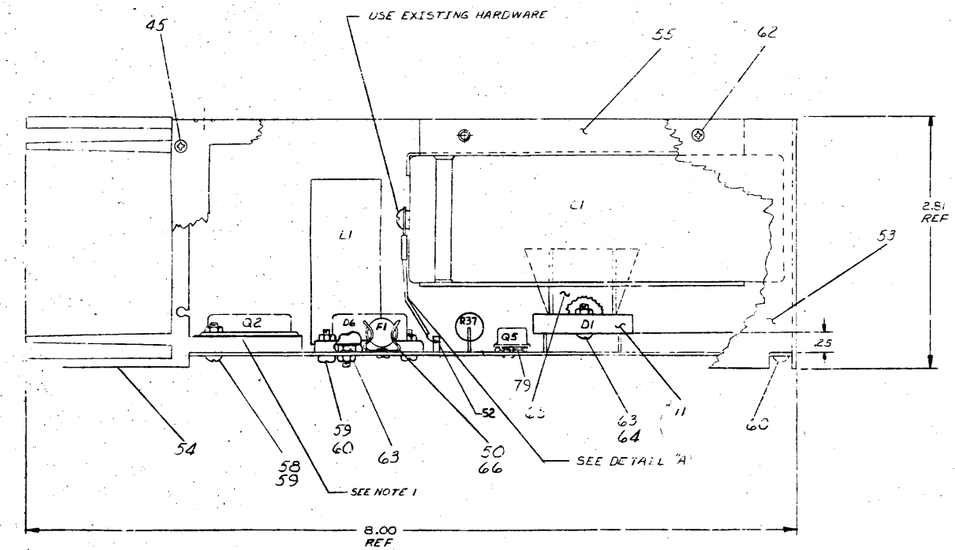

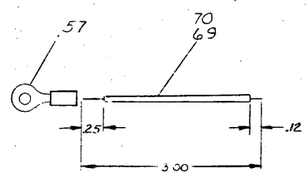

DETAIL "A"
SCALE = NONE
RED WIRE GOES TO POSITIVE TERMINAL
BLK WIRE GOES TO NEGATIVE TERMINAL

DELETED COMPONENTS	
RESISTORS:	R9
DIODES	D10, D12

QTY	REF DESIGNATION	DESCRIPTION	PART NO.
1	Q1	TRANSISTOR 2N4920-1	1509603-1
1	R13	RES. 27Ω 1/2W 5% FUSIBLE	1312496-01
AR		INSULATION	9107256-11
1	R29	RES 220 1/4W 5%	1300271
1	R37	RES. .1 10W 1%	1309108
1	R38	RES.1K 1% THERMISTOR	1310071
1	C16	CAP 100UF 25V	1027781
1	Q10	TRANSISTOR MJ900	1510713
1	Q9	TRANSISTOR MJ3000	1511543
1	C13	CAP. 100 PF, 100V, ±5% DM	1000016
2	Q4, Q14	TRANSISTOR MPS A05	1510705
1	Q5	DIODE 1000	1100100
2	(UNDER Q5 & R5)	TRANSPAD	9007275
1	R31	RES. 1.5Ω 2W 10%	1310417
2	C14, C17	CAP, 1000 pF, 100V, ±5% DIM.	1300043
1	R22	RES 383Ω 7/8W 1%	1305125
2	R33, R8	RES 1.78K 1/2W 1%	1302612
1	R11	RES 15K 1/2W 5%	1300596
1	R20	RES 470Ω 1/4W 5%	1303116
3		WASHER INSULATOR	9008721
A/R		COMPOUND, THERMAL	9006268
A/R		WIRE, #18 AWG, STRD, 10% INS (BLK)	9107380-00
A/R		WIRE, #18 AWG, STRD, 10% INS (RED)	9107380-22
1	J1	MATE-N-LOCK CONN 8 PIN	1205048
8		PIN, SOCKET, MATE-N-LOCK	1204498
4		EYELET 6S-4-7	9008139
1		HEAT SINK, BRIDGE RECTIFIER	1210907
1		SCR PHL PAN HD 6-32 X ¾	9000649-1
5		NUTS HEX 8-32 SS	9008185
2		SCR PHL FLAT HD. 8-32 X 5/16	9008521-2
2		SCR PHL FLAT HD. 4-40 X ¼	9005306-3
4		SCR PHL PAN HD. 4-40 X 3/8	9008911-1
10		NUTS HEX 4-40	9009562
8		SCR PHL PAN HD 4-40 X ¼	9008913-1
4		TERMINAL SOLDERLESS #10	9007539
1		COVER - CAP	9-30-H754-0-2
1		1.5 CAP PART	C-18-5309758-0-0
1		HEAT SINK REGULATOR	D-PS-1210737-0-0
1		BRACKET REG.	D-18-5309756-4-0
4		SPLIT LUG	9008735
1	Q8	TRANSISTOR 2N6028	15-10977
2		FUSE CLIP	9007203
1	F1	FUSE .8 AMP	1213237-00
1	L1	REACTOR 170 uHY	16-10948
1	E1	INTEGRATED CIRCUIT 723	18-10415
6	Q7,Q6,Q11,Q12, Q13	TRANSISTOR MPS A55	15-10708
4		SCR PHL FLAT HD #8-40 SELF TAPPING	9005142-08
1	Q5	TRANSISTOR DEC5508	15-02708
1	Q2	TRANSISTOR 2N5038	15-10869
1	Q3	TRANSISTOR 2N4030	15-08935
2	R37 R21	RES VARIABLE 200 ±20% POT	12-10952
2	R23, R36	RES 5.1 1/8 5%	13-08421
1	R18	RES 237 1/8W 1%	1304857
2	R16, R5	RES 1/8 5% 27	13-01522
1	R10	RES 150 1/8 5%	13-00250
REF		ASSY/DRILLING HOLE LAYOUT	D-AH-H754-0-5
2	R7, R40	RES 2K 1/4W 5%	1302368
2	R6, R19	RES 12% 1/8 5%	13-00498
6	R15, R25, R30, R26, R35, R41	RES 100 1/8 5%	13-00228
1	R12	RES 68Ω 1/2W 5% FUSIBLE	1312496-02
1	R27	RES 10K 1/4W 1%	1303512
1	R32	RES 39K 1/8 5%	13-00444
1	R16	RES 287Ω 1/8W 1%	13-05124
1	R28	RES 10K 1/8 5%	12-02985
1	C11	CAP .22 UF 20V 10% S TANT	10-02431
1	R4	RES 5% 25 .05 Ω	1310876-1
1	R3	RES 1.5K 5W 5%	13-01897
1	R34	RES 47 2W 5%	13-01258
1	R26	RES 1.5K 1/8 5%	13-00391
2	R1, R2	RES 3.3K 1% 1/8	13-02827
1	R28	RES 10Ω, 1/4W. 5%	1301317
2	D11, D8	DIODE 1N3624	1110420
1	D46	DIODE 752A ZENER	1102809
1	D9	DIODE MR 1488 P-2	11-09453
1	D7	DIODE IN4728, 3.3V	11-10006
1	D6	DIODE, 20 AMP FAST REC	11-10719
1	D3	DIODE IN4744 ZENER, 15 V	11-05648
1	D1	DIODE MDS 3514	11-10714
1	Ds, D13 D4	DIODE D664	11-10016
1	C15	CAP 1 UF 50V ±20% DISC	1400020-310
1	C9	CAP .25 UF 20V 5% AL EL.	30-10879
5	C7 C8 C6 C10 C12	CAP .01UF 50V 20% DISC.	10-09610-104
1	C8	CAP 2700PF 100V 5% DM	10-07837
1	C5	CAP 500PF 100V 5% DM	10-00012
1	F1	LAMP, 28V 40 MA	12-11239
1	C12	CAP .01UF 50V DISC	10-01714
2	C1, C2	CAP 5.6K UF 50V 5% AL EL.	10-11363
		ETCHED CIRCUIT BOARD	9010531
		MODULE ECO HISTORY	D-MH-H754-0-6
		X-Y COORDINATE HOLE LOCATION	X-CO-H754-0-4

PARTS LIST

ETCH BOARD REV: H
D664 M3606

SEMICONDUCTOR CONVERSION CHART

DEC NO.	EIA NO.	+ DEC NO.	EIA NO.

IC TYPE	GND	+5V
GND AND 5V ARE USUALLY PIN 7 AND 14 RESPECTIVELY. EXCEPTIONS ARE STATED ABOVE		

IC PIN LOCATIONS

ITEM NO.	FROM	PAGE I-E	TO PIN

JUMPER LIST

A. BARON	8-24-76	H754-00013	P				
A. BARON	8-13-76	H754-00011	P				
A. BARON	7-20-76	H754-00012	N				
A. BARON	5-27-76	H754-00009	N				
A. BARON	5-13-76	H754-00008	N				
A. BARON	5-13-76	H754-00007	N				
A. BARON	5-13-76	H754-00006	N				
A. BARON	5-13-76	H754-00005	N				
A. BARON	5-13-76	H754-00004	N				
A. BARON	5-13-76	H754-00003	N				
A. BARON	5-13-76	H754-00002	N				
A. BARON	5-13-76	H754-00001	N				
A. BARON	5-13-76	H754-00000	N				
G. WOLFE	4-27-76	H754-00005	N				
G. WHITCOMB	4-16-76	H754-00004	N				
G. WHITCOMB	4-16-76	H754-00003	N				
G. WHITCOMB	4-16-76	H754-00002	N				
G. WHITCOMB	4-16-76	H754-00001	N				
G. WHITCOMB	4-16-76	H754-00000

THIS DRAWING AND SPECIFICATION, HEREIN, ARE THE PROPERTY OF DIGITAL EQUIPMENT CORPORATION AND SHALL NOT BE REPRODUCED OR COPIED OR USED IN WHOLE OR IN PART AS THE BASIS FOR THE MANUFACTURE OR SALE OF ITEMS WITHOUT WRITTEN PERMISSION.
COPYRIGHT © 1972, DIGITAL EQUIPMENT CORPORATION

F1 10A

D1 NSS 3514

C1 5800UF 50V

C2 5800UF 50V

R1 3.9K 1W 10%

R2 3.9K 1W 10%

J1-8 AC

J1-7 AC

R4 .03Ω 5W, 3%

R5 27Ω

R3 1.5K 5W, 5%

C12 .05UF 25V

Q1 2N4920-1

Q2 2N5038

Q3 2N4920

R13 * 27Ω 1/2W

R12 * 68Ω 1/2W

L1 170 UHY

R28 10Ω

C8 .01UF 20% 50V

D6 20AMP

D11 IN5624

R23 5.1Ω

R24 100Ω

C16 1000UF 25V

J1-5 +20V

Q7 MPSA55

C9 2200UF 30V

I1

R33 1.78K 1/8W 1%

C14 100PF

R34 47Ω 2W 5%

Q11 MPS A55

Q10 MJ9000

R32 3.9K

MPS A05 Q4

D2 D003

D4 D664

R31 .15Ω 2W 10%

MPS A55 Q6

C14 1000PF

R22 383Ω 1/8W 1%

R30 100Ω

Q9 MJ3000

R21 200Ω 20% 1/2W

D13 D664

Q5 DEC 3500

C3 .01UF

R39 220Ω

R40 2K

Q13 MPS A55

Q8 2N6028

R7 2K

R38 1K THERM.

C11 2.2UF 35V 10%

D3 IN4744 15V

R6 12K

1000PF 100V C17

R29 18K

R10 150Ω

C4 .01UF 50V 20%

C15 .1UF 20%

Q14 MPS A05

R41 100Ω

R37 .1 10W 1%

D9 MCR 649P-2

C7 .01UF 20% 50V

R25 100Ω

J1-3 -5V

D14 752A

Q12 MPSA55

R36 5.1Ω

R35 100Ω

D8 IN5624

D7 IN970B 24V

R11 15K

R20 470Ω

J1-2 GND

R26 1.5K

D5 D664

R8 1.78K 1/8W, 1%

R27 10K 1/8W, 1%

C10 .01UF 20% 50V

R19 12K

C6 2700PF

R18 237Ω 1/8W 1%

R15 100Ω

R17 200Ω 20% 1/2W

R14 27Ω

R16 287Ω 1/8W 1%

DEC 723C

C5 56PF

* FUSIBLE RESISTOR

DRN. L. BISSONNETTE	8-29-72	FIRST USED ON H754
CHK'D R. VOWLES	12-17-72	digital
ENG. R. BURTON	1-7-73	TITLE +20 VOLT REGULATOR
PROJ. ENG. R. BURTON	5-7-73	
PROD. L. BOTTISTE	5-9-73	
NEXT HIGHER ASSY.		
SCALE		SIZE D CODE CS NUMBER H754-0-1 REV. P
SHEET 2 OF 2		DIST.

REVISIONS: REV. | CHANGE NO. | CHK.

THIS DRAWING AND SPECIFICATIONS, HEREIN ARE THE PROPERTY OF DIGITAL EQUIPMENT CORPORATION AND SHALL NOT BE REPRODUCED OR COPIED OR USED IN WHOLE OR IN PART AS THE BASIS FOR THE MANUFACTURE OR SALE OF ITEMS WITHOUT WRITTEN PERMISSION. COPYRIGHT © 1976, DIGITAL EQUIPMENT CORPORATION

ITEM NO.	DWG.NO/PART NO.	DESCRIPTION	QUANTITY/VARIATION 11/55-BA	11/55-BB	11/55-BC	11/55-BD
1	C-PL-11/55-CA-Ø	BASIC ASSY 115V 60HZ	1	-	-	-
2	C-PL-11/55-CB-Ø	BASIC ASSY 230V 50HZ	-	1	-	-
3	C-PL-11/55-CC-Ø	BASIC ASSY 115V 60HZ	-	-	1	-
4	C-PL-11/55-CD-Ø	BASIC ASSY 230V 50HZ	-	-	-	1
5	A-PL-LA36-CE-Ø	SERIAL DEC WRITER 115V 60HZ	1	-	1	-
6	A-PL-LA36-CJ-Ø	SERIAL DEC WRITER 230V 50HZ	-	1	-	1

REVISIONS: REV. | CHANGE NO. | CHK

DRN.	R.BEASLEY	3 FEB 76
CHK'D	D. HEALY	10 FEB 76
ENG.	Vallie Boon	12 MAR 76
PROJ. ENG.	J. Boon	12 MAR 76
PROD.	[illegible]	12 MAR 76

FIRST USED ON: PDP11/55

digital

TITLE: 11/55 SYSTEMS PARTS LIST

NEXT HIGHER ASSY.: B-DD-11/55-0

SCALE: —//—

SHEET 1 OF 1

SIZE	CODE	NUMBER	REV.
C	PL	11/55-0-4	

DIST.

DEC FORM NO. DRC 110 A

72

DIGITAL EQUIPMENT CORPORATION
MAYNARD, MASSACHUSETTS
PARTS LIST

MADE BY MAT GAIGE DATE 8 MAR 76	CHECKED D. HEALY DATE 9 MAR 76	SECTION 1
ENG Verell Boone DATE 12 MAR 76	PROD J Bornstein DATE 12 MARCH 76	ISSUED SECT. 1

ITEM NO	DWG NO. / PART NO.	DESCRIPTION	QUANTITY / VARIATION
1	MPØØØ39	11/55 PRINT SET (CPU)	1
2	MPØØØ4Ø	11/55 PRINT SET (INTERNAL OPTIONS)	1
3	EK-11045-MM	11/45 SYSTEM & INSTALLATION MANUAL	1
4	EK-KB11A-MM	KB11 MAINTENANCE MANUAL	1
5	2ØØ2-2Ø175-4526	PDP11 PERIPHERALS HANDBOOK	1
6	67-ØØ473-2743	11/45 PROCESSOR HANDBOOK	1
7	ZRØØ1-RB	SYSTEM SOFTWARE KIT	1
8	MAINDEC-11-DZQMB-D	MEMORY Ø-124 DIAGNOSTIC	1
9	MAINDEC-11-DZQMB-PB	MEMORY Ø-124 DIAGNOSTIC	1
10	MAINDEC-11-DZMMJ-D	8K SPECIAL DIAGNOSTIC	1
11	MAINDEC-11-DZMMJ-PB	8K SPECIAL DIAGNOSTIC	1
12	MAINDEC-11-DCMFA-D	MOS-CORE PARITY DIAGNOSTIC	1
13	MAINDEC-11-DCMFA-PB	MOS-CORE PARITY DIAGNOSTIC	1
14	EK-MS11-MM	MS11 MAINTENANCE MANUAL	1
15	EK-MF11U-MM	MF11-U/UP MAINTENANCE MANUAL	1
16	EK-KT11C-MM	KT11 MAINTENANCE MANUAL	1
17	ZR1Ø4-RB	KT11 SOFTWARE KIT	1
18	ZJ135-RB	DL11 SOFTWARE KIT	1
19	EK-DL11-TM	DL11 MANUAL	1
20	EK-BM873-TM	BM873 LOADER, MANUAL	1
21	ZJ1Ø6-RB	BM873 SOFTWARE KIT	1
22	ZJ137-RB	KW11-L, LINE CLOCK SOFTWARE KIT	1

TITLE	ASSY NO.	SIZE	CODE	NUMBER	REV	ECO NO
SHIPPING LIST 11/55	NONE	A	PL	11/55-0-3	A	11/55-0001
	SHEET 1 OF 2	DIST.				

DEC FORM DEC 16 (325) 1031 N870
DRA 110

DIGITAL EQUIPMENT CORPORATION
MAYNARD, MASSACHUSETTS
PARTS LIST

MADE BY MAT GAIGE DATE 8 MAR 76	CHECKED D. HEALY DATE 9 MAR 76	SECTION 1
ENG Verell Boone DATE 12 MAR 76	PROD J Bornstein DATE 12 MARCH 76	ISSUED SECT. 1

ITEM NO	DWG NO. / PART NO.	DESCRIPTION	QUANTITY / VARIATION
23	EK-KW11L-TM	KW11L MAINTENANCE MANUAL	1
24	7008855	POWER CABLE, SYSTEMS UNIT	3
25	9007221	AGC 5A FUSE	5
26	9007226	AGC 15A FUSE	5
27	9009039	2/10A S B FUSE	5
28		H96Ø-C CAB FILTER	1
29		CONSOLE KEY	2
30		LOG BOOK	1
31		PDP11 INSTRUCTION CARD	1
32	EK-DL11-W-MM	DL11-W MAINTENANCE MANUAL	1
33	EK-M9301-MM	M9301-YB MAINTENANCE MANUAL	1
34	DZYM9A-A	M9301-YB SOFTWARE KIT	1

TITLE	ASSY NO.	SIZE	CODE	NUMBER	REV.	ECO NO.
SHIPPING LIST 11/55	NONE	A	PL	11/55-0-3	A	
	SHEET 2 OF 2	DIST.				

DEC FORM DEC 16 (325)-1031 N870
DRA 110

EQUIPMENT CORPORATION
MAYNARD MASSACHUSETTS

DRAWING DIRECTORY

"THIS DRAWING AND SPECIFICATIONS, HEREIN, ARE THE PROPERTY OF DIGITAL EQUIPMENT CORPORATION AND SHALL NOT BE REPRODUCED OR COPIED OR USED IN WHOLE OR IN PART AS THE BASIS FOR THE MANUFACTURE OR SALE OF ITEMS WITHOUT WRITTEN PERMISSION. COPYRIGHT © 1976 , DIGITAL EQUIPMENT CORPORATION"

CUSTOMER PRINT SET INDEX

SEQUENCE

SEQUENCE

THIS IS PRINT SET

UNIT VARIATIONS		PRINT SET
VAR	TITLE	
11T55-BA	11/55-BA,FP11-C,RK11J-DE,	
	RKØ5J-AA,115V 60 HZ	
11T55-BB	11/55-BB,FP11-C,RK11J-DJ,	
	RKØ5J-BB,230V 50 HZ	
11T55-BC	11/55-BC,FP11-C,RK11J-DE,	
	RKØ5J-AA,115V 60 HZ	
11T55-BD	11/55-BD,FP11-C,RK11J-DJ,	
	RKØ5J-BB,230V 50 HZ	

REVISIONS

REV	CHG. NO.	DATE

USED ON OPTION/MODEL

SHEET 1 OF 2

		DATE
DRN.	D. Healy	1 MAR 76
CHK'D.	D. Healy	2 MAR 76
PROJ ENG.	Darrell Boss	12 MAR 76
PROD.	J. Bornstein	18 MAR. 76
FIELD SERV.	David M. Cooke	12-MAR-76

TITLE

STANDARD SYSTEM 11T55

SIZE	CODE	NUMBER	REV
B	DD	11T55-Ø	

DIST

EN-01062-1A-16-R972-(325)

DRB 106

CUSTOMER PRINT SET	MFG. SET	FIND NO.	DRAWING NO.	REV	NO OF SHT	DESCRIPTION	OPTION NO./FILE DATE
		1	B-AR-11T55-Ø-Ø		3	STANDARD SYSTEM 11T55	
			A-PL-11T55-Ø-1		1	SHIPPING LIST 11T55	
		2	B-DD-11/55-0		6	BASIC BASIC ASSY PDP11/55	
		3	B-DD-FP11-C		2	FLOATING POINT PROCESSOR FP11-C	
		4	B-DD-RK11-D		4	DISK DRIVE & CONTROL RK11J	
		5	B-DD-RKØ5J-Ø		5	DISK DRIVE RKØ5J	
		6	D-IA-7409271-0-0			CONSOLE PANEL 11T55	
			C-SS-7009271-0-13			SILK SCREEN	
			C-SS-7009271-0-14			SILK SCREEN	
			C-SS-7009271-0-15			SILK SCREEN	
			C-SS-7009271-0-16			SILK SCREEN	
			C-SS-7009271-0-17			SILK SCREEN	
			C-SS-7009271-0-12			SILK SCREEN	

CUSTOMER PRINT SET	MFG SET	FIND NO.	DRAWING NO.	REV	NO OF SHT	DESCRIPTION	OPTION NO./FILE DATE

CUSTOMER PRINT SET CODES

X = PRINT OF DOCUMENT INCLUDED IN PRINT SET
C = INCLUDES ALL PRINTS INDICATED ON DOCUMENT
S = CONFIDENTIAL AUTHORIZED SIGNATURE REQUIRED

TITLE		SIZE	CODE	NUMBER	REV
STANDARD SYSTEM 11T55	SHEET 2 OF 2	B	DD	11T55-Ø	

DRB 108

"THIS DRAWING AND SPECIFICATIONS, HEREIN, ARE THE PROPERTY OF DIGITAL EQUIPMENT CORPORATION AND SHALL NOT BE REPRODUCED OR COPIED OR USED IN WHOLE OR IN PART AS THE BASIS FOR THE MANUFACTURE OR SALE OF ITEMS WITHOUT WRITTEN PERMISSION.
COPYRIGHT © 1976 DIGITAL EQUIPMENT CORPORATION"

TABLE OF
CONTENTS

REVISIONS		
CHK	CHANGE NO.	REV.

SHEET NO.

1. TABLE OF CONTENTS
2. ARRANGEMENT GUIDELINES
3. 11T55 BASIC ARRANGEMENT

ENG.	Verell Boon	18 MAR 76
CHK.	D. Healy	3 MAR 76
MKT.	Verell Boon	18 MAR 76
PROD.	S. Bornstein	18 MAR 76
FIELD	PAUL CARDOS VB	18 MAR 76

FIRST USED ON

digital

TITLE
STANDARD SYSTEM 11T55

NEXT HIGHER ASSY.
B-DD-11T55-Ø

SCALE —//—

SHEET 1 OF 3

SIZE	CODE	NUMBER	REV.
B	AR	11T55-Ø-Ø	

DIST.

B AR 11T55-Ø-Ø

EN-01121-16-N575-(325)-
DRB 121

"THIS DRAWING AND SPECIFICATIONS, HEREIN, ARE THE PROPERTY OF DIGITAL EQUIPMENT CORPORATION AND SHALL NOT BE REPRODUCED OR COPIED OR USED IN WHOLE OR IN PART AS THE BASIS FOR THE MANUFACTURE OR SALE OF ITEMS WITHOUT WRITTEN PERMISSION.
COPYRIGHT ©1976, DIGITAL EQUIPMENT CORPORATION"

ARRANGEMENT
GUIDELINES

NOTES:

1. FOR MODULE PLACEMENT INFORMATION REFER TO E-MU-KB11-D-1, A-SP-FP11-C-5,D-MF11-U-MU, and D-MU-RK11-D-1.

VARIATIONS OF 11T55

11T55-BA	=	115V,60 HZ
11T55-BB	=	230V,50 HZ
11T55-BC	=	115V,60 HZ
11T55-BD	=	230V,50 HZ

2. AIR FLOW RESTRICTIONS:

   NO FULL DEPTH OPTION WILL BE INSTALLED ABOVE THE 11/55 CPU BOX; ONLY SEMI-DEPTH OPTION (PCØ5, RXØ1, TU56, etc.) CAN BE INSTALLED ONLY IF THERE IS A MINIMUM OF 5 INCHES BETWEEN THE TOP OF CPU BOX AND THE OPTION.

3. NO NON-PARITY MEMORY WILL BE INSTALLED IN ANY 11/55 SYSTEM.

B AR 11T55-Ø-Ø

11T55-Ø-Ø AR B

REVISIONS		
CHK	CHANGE NO.	REV.

TITLE	SIZE	CODE	NUMBER	REV.
STANDARD SYSTEM 11T55	B	AR	11T55-Ø-Ø	
SCALE — / SHEET 2 OF 3	DIST.			

EN-01120-16-N575-(325)

DRB 122

"THIS DRAWING AND SPECIFICATIONS, HEREIN, ARE THE PROPERTY OF DIGITAL EQUIPMENT CORPORATION AND SHALL NOT BE REPRODUCED OR COPIED OR USED IN WHOLE OR IN PART AS THE BASIS FOR THE MANUFACTURE OR SALE OF ITEMS WITHOUT WRITTEN PERMISSION.
COPYRIGHT © 1976 DIGITAL EQUIPMENT CORPORATION"

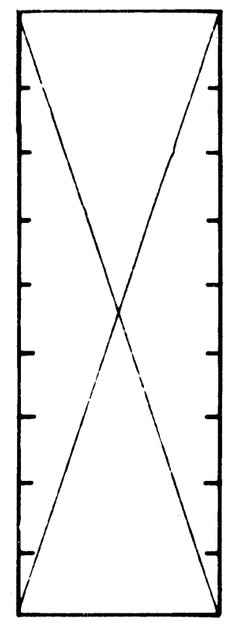

EXPANDER BOX 2

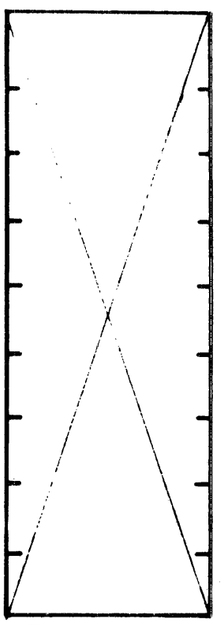

EXPANDER BOX 1

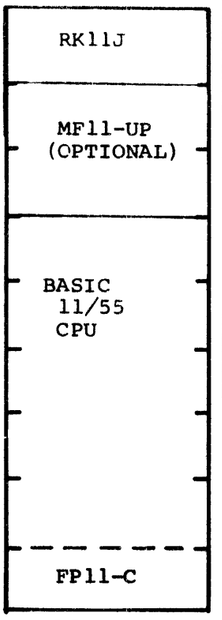

CPU BOX

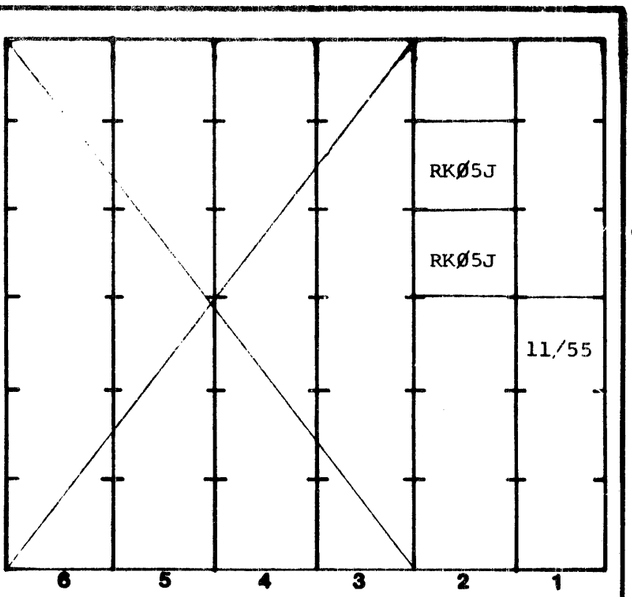

CABINET ARRANGEMENT

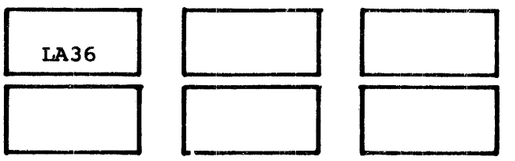

FREE STANDING UNITS

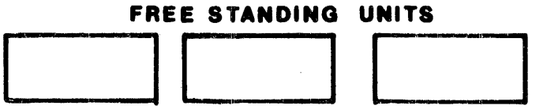

SOFTWARE

11/55 CPU	MF11-UP (OPTIONAL)	RK11-D						

UNIBUS SEQUENCE

6. 2 1 — UNIBUS LOAD

2 2 — UNIBUS LENGTH

REVISIONS		
CHK	CHANGE NO.	REV.

QUANTITY	DESCRIPTION	DWG./PART NO.	VARIATION 115 60	230 50	115 60	230 50	ITEM NO.
1	CONSOLE PANEL 11T55	7409271-5	-	-	-	-	5
1	DISK DRIVE	RKØ5J	AA	BB	AA	BB	4
1	DISK DRIVE & CONTROL	RK11J	DE	DJ	DE	DJ	3
1	FLOATING POINT PROCESSOR	FP11	C	C	C	C	2
1	BASIC ASSY	11/55	BA	BB	BC	BD	1
	SYSTEM - BASIC 11T55	11T55	BA	BB	BC	BD	

TITLE	SIZE	CODE	NUMBER	REV.
STANDARD SYSTEM 11T55	B	AR	11T55-Ø-Ø	
SCALE — SHEET 3 OF 3	DIST.			

EN-01119-18-N575-(325)

DRB 123

DIGITAL EQUIPMENT CORPORATION
MAYNARD, MASSACHUSETTS

PARTS LIST

MADE BY M. GAIGE DATE 15 Mar 76	CHECKED D.HEALY DATE 16 Mar 76	SECTION 1
ENG Verell Bogen DATE 18 MARCH '76	PROD J Bornstein DATE 3-18-76	ISSUED SECT. 1

ITEM NO.	DWG NO./PART NO.	DESCRIPTION	QUANTITY/VARIATION 11T55-BA	11T55-BB	11T55-BC	11T55-BD
1	A-PL-11/55-Ø-3	SHIPPING LIST 11/55	1	1	1	1
2	A-PL-RK11-D-7	SOFTWARE LIST RK11-D	1	1	1	1
3	A-AL-RK11-D-6	ACCESSORY LIST RK11-D	1	1	1	1
4	A-PL-FP11-C-4	SHIPPING LIST FP11-C	1	1	1	1
5	A-PL-FP11-C-3	SOFTWARE LIST FP11-C	1	1	1	1
6	MAINDEC-DZZA-I-HB	RKDP DISK SOFTWARE KIT #1	1	1	1	1
7	MAINDEC-DZZB-I-HB	RKDP DISK SOFTWARE KIT #2	1	1	1	1
8	MAINDEC-DZQXA-H-D	RKDP OPERATOR MANUALS	1	1	1	1

TITLE	ASSY NO.	SIZE	CODE	NUMBER	REV.	ECO NO
SHIPPING LIST 11T55	NONE	A	PL	11T55-Ø-1		
	SHEET 1 OF 1	DIST.				

DEC FORM DEC 16 (325) 1031 N870