# Rack-Mountable VAX 4000 Model 100A Installation Information

Order Number EK–465RA–IN. B01

**Digital Equipment Corporation**
**Maynard, Massachusetts**

**August 1993**

The information in this document is subject to change without notice and should not be construed as a commitment by Digital Equipment Corporation. Digital Equipment Corporation assumes no responsibility for any errors that may appear in this document.

No responsibility is assumed for the use or reliability of software on equipment that is not supplied by Digital Equipment Corporation or its affiliated companies.

Restricted Rights: Use, duplication, or disclosure by the U.S. Government is subject to restrictions set forth in subparagraph (c)(1)(ii) of the Rights in Technical Data and Computer Software clause at DFARS 252.227-7013.

**FCC USER STATEMENT**
**NOTICE:** This equipment generates, uses, and may emit radio frequency. The equipment has been type tested and found to comply with the limits for a Class A computing device pursuant to Subpart J of Part 15 of FCC rules, which are designed to provide reasonable protection against such radio frequency interference. Operation of this equipment in a residential area may cause interference in which case the user at his own expense will be required to take whatever measures may be required to correct the interference.

Copyright © Digital Equipment Corporation 1993

All Rights Reserved.
Printed in U.S.A.

Digital, Q–bus, ThinWire, VAX, VAX DOCUMENT, VMS, and the DIGITAL logo are trademarks of Digital Equipment Corporation.

This document was prepared using VAX DOCUMENT, Version 2.1.

# Contents


## Preface ix

## Chapter 1 Installation Procedure

1.1 Introduction . . . . . 1–1
1.2 Installation Procedure . . . . . 1–2

## Chapter 2 Operator Access and Control Procedure

## Chapter 3 Troubleshooting and Diagnostics

## Chapter 4 Maintenance and FRU Replacement Procedures

4.1 Access the Rack-Mountable VAX 4000 Model 100A . . . . . 4–2
4.2 Remove and Install the Shipping Strap and Bracket . . . . . 4–2
4.3 Remove the Rackmount Enclosure Cover (P/N 70-30948-01) . . . . . 4–6
4.4 Remove and Replace the Internal Q–bus Cables (P/N 17-03545-01) . . . . . 4–11
4.5 Remove and Replace the Internal DSSI Bus Cable (P/N 17-03544-01) . . . . . 4–12
4.6 Remove and Replace the External DSSI Bus Cable (P/N 17-03778-01) . . . . . 4–14

4.7 Remove and Replace the Internal SCSI Cable (P/N 17-02944-01) . . . . . 4–19
4.8 Remove and Replace the DSSI Card . . . . . 4–20

## Appendix A Shelf Assembly

## Appendix B Connecting Peripheral Device Cables

B.1 Connecting a Peripheral Cable to MMJ Port 0 and 1 . . . . . B–2
B.2 Connecting a Peripheral Cable to Asynchronous Port A . . . . . B–4
B.3 Connecting a Peripheral Cable to Asynchronous Port A (DHW42-CA) . . . . . B–6
B.4 Connecting a Peripheral Cable to Synchronous Port 0 and 1 . . . . B–8
B.5 Connecting a Peripheral Cable to the Asynchronous Modem Control Port . . . . . B–10
B.6 Connecting Cables to SCSI Cable Ports . . . . . B–12
B.7 Connecting External DSSI Bus Cables to Internal DSSI Bus Cable Port . . . . . B–14
B.8 Connecting Cables to Top Cover Cable Ports . . . . . B–16
B.8.1 Connecting Q–bus Cable Ports . . . . . B–16
B.8.2 Connecting External Bus DSSI Cables to External Bus DSSI Cable Ports . . . . . B–17

## Appendix C Single to Dual DSSI Upgrade Procedure

## Appendix D Hardware Specifications

D.1 System Unit Specifications . . . . . D–1
D.2 Internal DSSI Device Specifications . . . . . D–4

## Appendix E Upgrade and Return Forms

## Examples


1–1 Successful Power-Up Test Screen . . . . . 1–43
1–2 Unsuccessful Power-Up Test Screen . . . . . 1–44


## Figures


1–1 Rack-Mountable VAX 4000 Model 100A System Kit Contents 1–4
1–2 VAX 4000 Model 100A Shelf Kit Contents (P/N 70-30949-01) 1–6
1–3 2T-RAK41-AA Kit Contents (For Desktop to Rackmountable System Conversion) . . . . . 1–9
1–4 2T-KFDDA-DF Desktop to Rackmount / Single to Dual DSSI Field Installable Upgrade Kit Contents . . . . . 1–10
1–5 2T-KFDDA-AF Single to Dual DSSI Field Installable Upgrade Kit Contents . . . . . 1–12
1–6 Removing the Desktop Enclosure Cover . . . . . 1–14
1–7 Removing the Bustle Frame from the Enclosure . . . . . 1–16
1–8 Desktop VAX 4000 Model 100A Port Cover . . . . . 1–17
1–9 Installing DSSI Plate Assembly . . . . . 1–18
1–10 Attaching the Internal Q–bus Cables to Rackmount Top Cover Bustle . . . . . 1–19
1–11 Disconnecting the Internal Power Cables . . . . . 1–21
1–12 Disconnecting Internal DSSI Connectors . . . . . 1–22
1–13 Disconnecting the Internal SCSI Cable . . . . . 1–23
1–14 Removing the Single DSSI Card . . . . . 1–24
1–15 Installing the Dual DSSI Card . . . . . 1–26
1–16 Installing New Rackmount Top Cover . . . . . 1–28
1–17 Placing the VAX 4000 Model 100A Medallion . . . . . 1–29
1–18 Front and Rear Mounting Brackets . . . . . 1–31
1–19 Installing the Shelf in the Cabinet . . . . . 1–32
1–20 RETMA Spacing . . . . . 1–33
1–21 Installing the VAX 4000 Model 100A System on the Shelf 1–35
1–22 Installing the Cable Management Bracket . . . . . 1–37

1–23 Making Console Connections . . . . . 1–39
1–24 Installing the Cable Barrier on the Shelf . . . . . 1–41
1–25 Installing the Front Bezel . . . . . 1–46
2–1 Front Bezel . . . . . 2–2
4–1 Removing and Installing the Shipping Bracket . . . . . 4–3
4–2 Removing the Shipping Strap . . . . . 4–5
4–3 Removing the Rackmount Enclosure Cover . . . . . 4–7
4–4 Removing and Installing the Two DSSI External Bus Connectors . . . . . 4–9
4–5 Internal Connectors . . . . . 4–10
4–6 Removing Internal Q–bus Connectors . . . . . 4–11
4–7 Removing the Internal DSSI Cable . . . . . 4–13
4–8 Disconnecting the Internal Power Cables . . . . . 4–15
4–9 Disconnecting Internal DSSI Connectors . . . . . 4–16
4–10 Disconnecting the Internal SCSI Cable . . . . . 4–17
4–11 Disconnecting DSSI cable from DSSI Card . . . . . 4–18
4–12 Removing the Internal SCSI Cable . . . . . 4–19
4–13 Disconnecting the Internal Power Cables . . . . . 4–21
4–14 Disconnecting Internal DSSI Connectors . . . . . 4–22
4–15 Disconnecting the Internal SCSI Cable . . . . . 4–23
4–16 Removing the Dual DSSI Card . . . . . 4–24
4–17 Installing the Dual DSSI Card . . . . . 4–26
A–1 Attaching Slides to the Shelf . . . . . A–2
A–2 Assembling the Shelf . . . . . A–3
B–1 Connecting a Peripheral Cable to MMJ Port . . . . . B–3
B–2 Connecting a Peripheral Cable to Asynchronous Port A . B–5
B–3 Connecting a Peripheral Cable to Asynchronous Port A (DHW42-CA) . . . . . B–7
B–4 Connecting to Synchronous and Modem Port . . . . . B–9
B–5 SCSI Cable Ports . . . . . B–13
B–6 DSSI Cable Ports . . . . . B–15
B–7 Q–bus Cable Ports . . . . . B–16
B–8 DSSI Cable Ports . . . . . B–17
C–1 2T-KFDDA-CF Single to Dual DSSI Field Installable Upgrade Kit . . . . . C–2
C–2 2T-KFDDA-AF Single to Dual DSSI Field Installable Upgrade Kit Contents . . . . . C–4

C–3 Disconnecting the Internal Power Cables . . . . . C–7
C–4 Disconnecting Internal DSSI Connectors . . . . . C–8
C–5 Disconnecting the Internal SCSI Cable . . . . . C–9
C–6 Removing the Single DSSI Card . . . . . C–10
C–7 Installing the Dual DSSI Card . . . . . C–12

## Tables

D–1 System Specifications: Rack-Mountable VAX 4000 Model 100A . . . . . D–2
D–2 System Unit Metrics . . . . . D–3
D–3 System Storage Conditions . . . . . D–3
D–4 System Operating Conditions and Nonoperating Conditions D–3
D–5 Hard Disk Drive Specifications . . . . . D–4
D–6 TZ30 Tape Drive Specifications . . . . . D–5
D–7 TZK10 QIC Tape Drive Specifications . . . . . D–5
D–8 TLZ06 Cassette Tape Drive Specifications . . . . . D–6
D–9 RRD42 Compact Disc Drive Specifications . . . . . D–7

# Preface

This manual describes how to install, upgrade and test the Rack-Mountable VAX 4000 Model 100A. This manual also refers to information on connecting the system to a network, connecting external options to the system, and booting the operating system.

## Audience

This manual is intended for persons experienced in installing computer equipment.

## Structure of This Manual

This manual is organized as follows:

**Chapter 1, Installation Procedure –** Contains the steps necessary to unpack the Rack-Mountable VAX 4000 Model 100A, to convert a desktop VAX 4000 Model 100 or 100A to a Rack-Mountable VAX 4000 Model 100A if necessary, and to install the Rack-Mountable VAX 4000 Model 100A.

**Chapter 2, Operator Access –** Contains the procedure to access the Rack-Mountable VAX 4000 Model 100A for control switches and to load media.

**Chapter 3, Troubleshooting and Diagnostics –** Contains troubleshooting and diagnostic information for the Rack-Mountable VAX 4000 Model 100A.

**Chapter 4, Maintenance and FRU Replacement Procedures –** Provides procedures specific to the Rack-Mountable VAX 4000 Model 100A.

**Appendix A, Shelf Assembly –** Provides instructions to assemble the shelf that is used to mount the Rack-Mountable VAX 4000 Model 100A in a cabinet.

**Appendix B, Connecting Peripheral Device Cables –** Provides cabling instructions to connect peripheral devices to the system.

**Appendix C, Dual DSSI Upgrade Procedure –** Contains the procedure to upgrade the Rack-Mountable VAX 4000 Model 100A containing a single DSSI to a dual DSSI.

**Appendix D, Hardware Specifications –** Describes the hardware specifications for the Rack-Mountable VAX 4000 Model 100A.

**Appendix E, Upgrade and Return Forms –** Contains the forms and procedure to return the required items to Digital.

## Additional Information

- *VAX 4000 Model 100 Operator Information Manual* (EK-466AA-OP)
- *VMS Factory Installed Software User Guide*
- *VAX 4000 Model 100 Customer Technical Information Manual* (EK-467AA-TI)
- *VAX 4000 BA42B Enclosure Maintenance Manual* (EK-472AA-MG)
- *VAX 4000 Model 100 KA52 CPU Maintenance Manual* (EK-473AA-MG)
- *VAX 4000 BA42 Enclosure System Options Manual* (EK-474AA-MG)
- *VAX 4000 Model 100A Installation Information* (EK-502AA-IN)
- *VAX 4000 Model 100A Operator Information* (EK-503AA-OP)
- *VAX 4000 Model 100A Customer Technical Information* (EK-504AA-TI)
- *VAX 4000 Model 100A Troubleshooting and Diagnostics Information* (EK-505AA-TS)
- *VAX 4000-10xA or MicroVAX 3100-9x CPU Firmware From Tape* (EK-VX4FW-UP)

## Conventions

The following conventions are used in this manual:

| Convention | Description |
|---|---|
| `MONOSPACE` | Text displayed on the screen is shown in monospaced type. |
| *italic type* | Italic type emphasizes important information and indicates the complete titles of manuals. |
| **Note** | A note contains information that is of special importance to the user. |
| **Caution** | Contains information to prevent damage to equipment. |
| **Warning** | Contains information to prevent personal injury. |

# Chapter 1

# Installation Procedure

This chapter describes, step-by-step, how to install the Rack-Mountable VAX 4000 Model 100A. The procedure to convert a desktop VAX 4000 Model 100 or 100A to a Rack-Mountable VAX 4000 Model 100A is also described.

## 1.1 Introduction

Installing the Rack-Mountable VAX 4000 Model 100A requires:

1. Preparing the site
2. Unpacking the kit
3. Converting the desktop unit to a rackmountable unit if required
4. Installing the shelf assembly
5. Installing the VAX 4000 Model 100A on the shelf
6. Installing the cable management bracket
7. Installing I/O terminators and/or option cables
8. Installing the cable barrier
9. Checking the power-up test results
10. Installing the front bezel
11. Connecting the system to a network
12. Connecting external options to the system
13. Booting the operating system

## 1.2 Installation Procedure

Follow each step sequentially in the following procedure to unpack and install the Rack-Mountable VAX 4000 Model 100A system.

**Step 1: Prepare the Site**

Site preparation involves choosing a suitable location for the system cabinet. Follow these guidelines when choosing the location:

- The system unit should be placed where the room temperature is between 10°C and 35°C (50°F and 95°F) and the humidity is between 20% and 80% noncondensing.
- The system unit should be placed at least 1 m (3 ft) away from heaters, photocopying machines or other operating equipment.
- The system unit should be placed in a well-ventilated location with at least 1 m (3 ft) of clear space in the front, rear, and sides to allow for proper airflow and servicing.

**Note**

**The system is mounted sideways on a slide shelf. Removable media is accessed on the left side; the power switch and cable ports are accessed on the right side.**

- The system unit should not be exposed to direct sunlight or abrasive particles.
- The system should be placed within 4.57 m (15 ft) of the console terminal. (The console terminal is not supplied with the system kit.)

**Note**

**Digital recommends that you DO NOT install the shelf in the lowest position in the cabinet. Installing and aligning the system with the bumpers and holes in the shelf is extremely difficult if the shelf is installed in the lowest cabinet position.**

You must also select the location within the cabinet for the Rack-Mountable VAX 4000 Model 100A. The system requires:

- 22.2 cm (8.75 in) of vertical cabinet mounting space
- 48.3 cm (19 in) of cabinet width mounting space
- 73.66 cm (29 in) minimum of cabinet depth mounting space:
  63.5 cm (25 in) for the system
  10.6 cm (4 in) for the cables
- Location of within 2 m (6 ft) of ac power source

The system unit must be mounted within cable routing distances. The Rack-Mountable VAX 4000 Model 100A is shipped with a 7.58 m (25 ft) MMJ cable for connection to a console terminal. Refer to the appropriate documentation for other external option cable length requirements.

**Note**

**The console terminal is not supplied with the system.**

### Step 2: Unpack the System and Identify the Parts

**Note**

**If your system has already been installed in a cabinet, refer to Section 4.2 to remove the shipping strap and bracket, then proceed to Step 9: Check the Power-Up Test Results.**

Make sure that you have all the parts listed on the packing slip(s).

1. Unpack the carton containing the Rack-Mountable VAX 4000 Model 100A system. Ensure that all parts listed in Figure 1–1 and Figure 1–2 have been received and are undamaged.

❶ VAX 4000 Model 100A System Unit

❷ DEC423 Terminal Cable (P/N 17-00811-03 / BC16E-25)

❸ One ThinWire Ethernet Connector (H8223) and Two Terminators (H8225)

❹ Power Cord (P/N 17-00606-16)

❺ Documentation and Software Licenses

❻ DSSI Terminator (P/N 12-29258-01)

❼ SCSI Terminator H8574-A (P/N 12-30552-01)

❽ Standard Ethernet Loopback Connector (P/N 12-22196-01)

❾ 25-Pin Adapter, D Sub to MMJ (P/N 17-32442-01 / H8575-A)

❿ Screw Lock Assembly (Qty 2) (P/N 90-08451-00)

⓫ VAX 4000 Model 100A Medallion (P/N 74-37642-31)

⓬ Shelf Kit (P/N 70-30949-01) (See Figure 1–2)

❶ Shelf Assembly

(The shelf comes partially assembled. See Appendix A if shelf is not assembled.)

❷ Chassis Slide Nut Bar, (Qty 4) (P/N 12-32830-01)

❸ Screw, Thread, 10-32 x 1/2, (Qty 22) (P/N 90-00063-39)

❹ Rack-Mountable VAX 4000 Mounting Screws, (Qty 4) (P/N 90-009984-00)

❺ Bumper, Rubber, (Qty 4) (P/N 90-09538-01)

❻ Cable Barrier Kit, (Qty 1) (P/N 70-30960-01)

❼ Bezel, Vented Installation Kit, (Qty 1) (P/N 70-30934-01):

- U-nut, 10-32, (Qty 4) (P/N 90-07786-01)
- Ball Studs, (Qty 4) (P/N 90-11337-01)

❽ Shipping Bracket, (Qty 1) (P/N 74-46848-01)

❾ Shipping Strap, (Qty 1) (P/N 74-46849-01)

❿ Mounting Bracket, Long Rear, Both Left and Right (P/N 12-32829-01)

⓫ Screw, 8-32 x 3/8, (Qty 10) (P/N 90-00063-22)

⓬ Nut, kep 8-32 x .344E, (Qty 8) (P/N 90-06563-00)

⓭ U-nut, 10-32, (Qty 8) (P/N 90-07786-01)

⓮ Interlock Bracket, (Qty 1) (P/N 74-46988-01)

⓯ Cable Management Bracket, (Qty 1) (P/N 74-40319-01)

⓰ Tie Wrap, 7 inches, (Qty 2) (P/N 90-07880-00)

⓱ Tie Wrap, 11 inches, (Qty 2) (P/N 90-09617-00)

2. If you are converting a desktop system to a Rack-Mountable VAX 4000 Model 100A system, ensure that you have the appropriate kits as described below:
   - To convert a VAX 4000 Model 100 to a Rack-Mountable VAX 4000 Model 100A with a single DSSI, you need the following items:
     - 2T-RAK41-AA Hardware Rackmount Kit (see Figure 1–3 for kit contents)
     - QZ-004AA-FW Firmware Upgrade Kit (refer to packing slip for kit contents)
     - QA-001AA-UW VMS Version 5.5.2H4 (refer to packing slip for kit contents)
     - 74-37642-31 Medallion, VAX 4000 Model 100A
   - To convert a VAX 4000 Model 100 to a Rack-Mountable VAX 4000 Model 100A with a dual DSSI, you need the following kit:
     - 2T-KFDDA-DF Single to Dual DSSI Upgrade and Rackmount Kit (see Figure 1–4 for kit contents)
   - To convert a VAX 4000 Model 100A single/dual DSSI to a Rack-Mountable VAX 4000 Model 100A single/dual DSSI respectively, you need the following kit:
     - 2T-RAK41-AA Hardware Rackmount Kit (see Figure 1–3 for kit contents)
   - To convert a VAX 4000 Model 100A single DSSI to a Rack-Mountable VAX 4000 Model 100A dual DSSI, you need the following kits:
     - 2T-RAK41-AA Hardware Rackmount Kit (see Figure 1–3 for kit contents)
     - 2T-KFDDA-AF Single to Dual DSSI Upgrade Kit (see Figure 1–5 for kit contents)

❶ VAX 4000 Model 100A Medallion (P/N 74-37642-31)

❷ Bar Nut (P/N 74-46919-01)

❸ DSSI Plate Connector (P/N 74-46668-01)

❹ DSSI Plate Screws (Qty 2) (P/N 90-06001-02)

❺ Rackmount Cover Assembly (P/N 70-30948-01)

❻ Caution Label (Qty 1) (P/N 36-24385-01)

❼ Installation Manual (Qty 1) (P/N EK-465RA-IN)

❽ Shelf Assembly (Qty 1) (P/N 70-30949-01) (See Figure 1–2)

❶ Dual DSSI Card (Qty 1) (P/N 54-22444-01)

❷ Remote DSSI Bus Cable (Qty 1) (P/N 17-03778-01)

❸ Machine Screw 2.5 m (Qty 4) (P/N 90-10917-01)

❹ DSSI Terminator (Qty 2) (P/N 12-29258-01)

❺ Alignment Pin (Qty 4) (P/N 12-30363-01)

❻ Washer (Qty 4) (P/N 90-08877-00)

❼ Medallion, VAX 4000 Model 100A (Qty 1) (P/N 74-37642-31)

❽ Firmware Upgrade Kit (Qty 1) (P/N QZ-004AA-FW) (refer to packing slip for kit contents)

❾ VMS Version 5.5.2H4 Kit (Qty 1) (P/N QA-001AA-UW) (refer to packing slip for kit contents)

❿ VAX 4000 Model 100A Documentation Kit (Qty 1) (P/N QA-00HAA-GZ) (refer to packing slip for kit contents)

⓫ Hardware Rackmount Kit (Qty 1) (P/N 2T-RAK41-AA) (refer to Figure 1–3 for kit contents).

❶ Dual DSSI Card (Qty 1) (P/N 54-22444-01)

❷ Remote DSSI Bus Cable (Qty 1) (P/N 17-03778-01)

❸ Machine Screw 2.5 m (Qty 4) (P/N 90-10917-01)

❹ DSSI Terminator (Qty 2) (P/N 12-29258-01)

❺ Alignment Pin (Qty 4) (P/N 12-30363-01)

❻ Washer (Qty 4) (P/N 90-08877-00)

### Step 3: Convert the Desktop VAX 4000 Model 100 or 100A to a Rack-Mountable VAX 4000 Model 100A with Dual or Single DSSI

If you do not need to convert your desktop system to a Rack-Mountable VAX 4000 Model 100A proceed to **Step 4: Install the Shelf Assembly**.

To convert a desktop VAX 4000 Model 100 or 100A to a Rack-Mountable VAX 4000 Model 100A, perform the following procedure:

1. Ensure that the customer has backed up all data and shut down the system.
2. Install the VAX 4000 Model 100A Firmware Version 2.3 Upgrade Kit (P/N QZ-004AA-FW) if necessary. Use the instructions provided with the kit.
3. Install VMS Upgrade Version 5.5.2H4 (P/N QA-001AA-UW) if necessary. Use the instructions provided with the kit.
4. Turn the power ON/OFF switch, located on the rear of the unit, to the OFF (O) position.
5. Disconnect the power cable from the unit.
6. Refer to Figure 1–6 and remove the external cables:
   a. Remove the external Q–bus cables:
      - Slide clip to the left.
      - Remove cable.
      - Slide clip to the right.
   b. Remove the external SCSI cable or terminator.
   c. Remove the external DSSI cable or terminator.
   d. Remove the Ethernet cable if necessary.
7. Remove the desktop enclosure cover (see Figure 1–6):
   a. Loosen (do not remove) the two captive screws ❶ (P/N 12-30338-05) on the rear of the unit holding the cover in place.

❶ Top cover screws (P/N 12-30338-05)

❷ Q–bus mounting hardware

❸ Locking/release tabs (one each side of bustle)

❹ Q–bus connectors

❺ DSSI connector

❻ SCSI connector

❼ Rear external bustle cover

❽ DSSI alignment pins (P/N 12-30363-01)

❾ DSSI connector screws (P/N 90-10917-01)

❿ SCSI connector screws (P/N 90-09643-00)

8. **If you are upgrading a VAX 4000 Model 100A, proceed to step 9 of this procedure.** If you are upgrading a VAX 4000 Model 100, remove the external bustle cover as follows (refer to Figure 1–6):

   a. Remove the two internal Q–bus cables (P/N 17-03545-01) from the rear of the unit by removing the mounting hardware ❷ (P/N 12-18672-01) holding the two Q–bus connectors ❹ to the bustle cover. **Save the mounting hardware.**

   b. Remove the DSSI internal I/O cable (P/N 17-03544-01) from the rear of the unit by removing the two cable screws ❾ on the DSSI connector ❺ and then pulling the cable straight back. **Save the cable screws.**

   c. Remove the internal SCSI cable (P/N 17-02944-01) from the rear of the unit by removing the two screws ❿ on the SCSI connector ❻ and then pulling the cable straight back. **Save the screws.**

   d. Remove the rear external bustle assembly ❼:

      - Push in the tabs ❸ on each side of the bustle ❼ and then remove the bustle by pulling the bustle to the rear and up off the frame.

      - Refer to Figure 1–7 and slide the metal grommeting ❷ attaching the frame ❶ to the enclosure I/O openings and pull the frame off the enclosure.

   e. Refer to Figure 1–6 and remove the two DSSI alignment pins ❽ from the bustle box.

   f. Proceed to step 10.

❶ Frame ❷ Metal grommeting

9. If you are upgrading a VAX 4000 Model 100A, refer to Figure 1–8 and remove the port cover ❻ as follows:

   a. Push on the tabs ❺ on each side of the port cover, and pull the cover to the rear and then up.

   b. Remove the six alignment pins ❼ with a flat blade screwdriver. **Save the alignment pins.**

   c. Remove the four Q–bus locking posts ❽ with a nut driver, and slide the Q–bus cable ❷ back into the enclosure. **Save the locking posts.**

   d. Remove the two Phillips screws ❿ attaching the internal DSSI bus cable ❶ connector to the port cover ❻, and if present, the four Phillips screws ❿ attaching a second external DSSI bus cable ❸ connector to the port cover. Slide the cable(s) back into the enclosure. **Save the Phillips screws.**

   e. Remove the two screws ❾ from the internal SCSI cable ❹ connector, and slide the cable back into the enclosure. **Save the screws.**

❶ DSSI cable (P/N 17-03544-01)

❷ Q–bus cable (P/N 17-03545-01)

❸ DSSI cable (P/N 17-03778-01)

❹ SCSI cable (P/N 17-02944-01)

❺ Tabs

❻ Port cover

❼ Alignment pins (P/N 12-30363-01)

❽ Q–bus locking posts (P/N 12-18672-00)

❾ SCSI connector screws (P/N 90-09643-00)

❿ Phillips screws (DSSI connector) (P/N 90-10917-01)

❶ SCSI (Lower) I/O cutout

❷ DSSI (Upper I/O cutout

❶ Internal Q–bus cables (P/N 17-03545-01)

❷ Rackmount top cover (P/N 70-30948-01) bustle

❸ Screws (P/N 12-30338-05)

❹ Caution label (P/N 36-24385-01)

11. If you are converting a VAX 4000 Model 100 or 100A single DSSI to a Rack-Mountable VAX 4000 Model 100A dual DSSI, perform the following steps. **If you are not making this conversion, proceed to step 12.**

    a. Refer to Figure 1–11. Remove the upper and lower drive mounting shelves together as a single unit (it is not necessary to disassemble the shelves themselves). Unscrew all six screws from the shelves; leave the captive screws ❶ in position and save the Phillips screws ❷ for reinstallation of the shelves. Remove the internal power cables ❸.

❶ Captive Screws (4)

❷ Phillips Screws (2)

❸ Internal Power Cables

b. Disconnect the internal DSSI bus connectors from all drives mounted on the shelves. It is not necessary to disconnect the power cable from each drive. Figure Figure 1–12 shows one drive as an example.

**Figure 1–12: Disconnecting Internal DSSI Connectors**

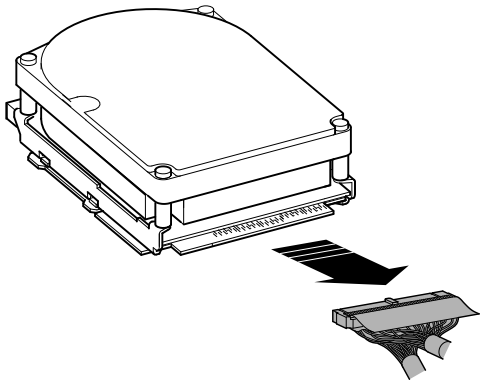

MLO-010804

c. Disconnect the internal SCSI cable from the backplane (see Figure 1–13:

- Release the memory module nearest the internal SCSI connector by pressing the tabs on each end, and tip it backward ❶.
- Disconnect the internal SCSI cable ❷ from its connector on the backplane.

d. Remove the shelves by sliding them forward ❸ and lifting them up ❹ and away from the enclosure (see Figure 1–13). Leave the memory module tipped backward until the shelves are reinstalled.

❶ Releasing the memory module and tipping it backward

❷ Internal SCSI cable

❸ Sliding the shelf forward

❹ Lifting the shelf up

e. Refer to Figure 1–14. Disconnect the DSSI cable from the DSSI connector ❶.

f. Remove the single DSSI card ❺ by gently prying it loose from the backplane connector ❹. Use a standoff tool ❷ to compress the post so that the corner of the card can be lifted off of the standoff ❸. Lift the card out and place it on an antistatic mat.

**Figure 1–14: Removing the Single DSSI Card**

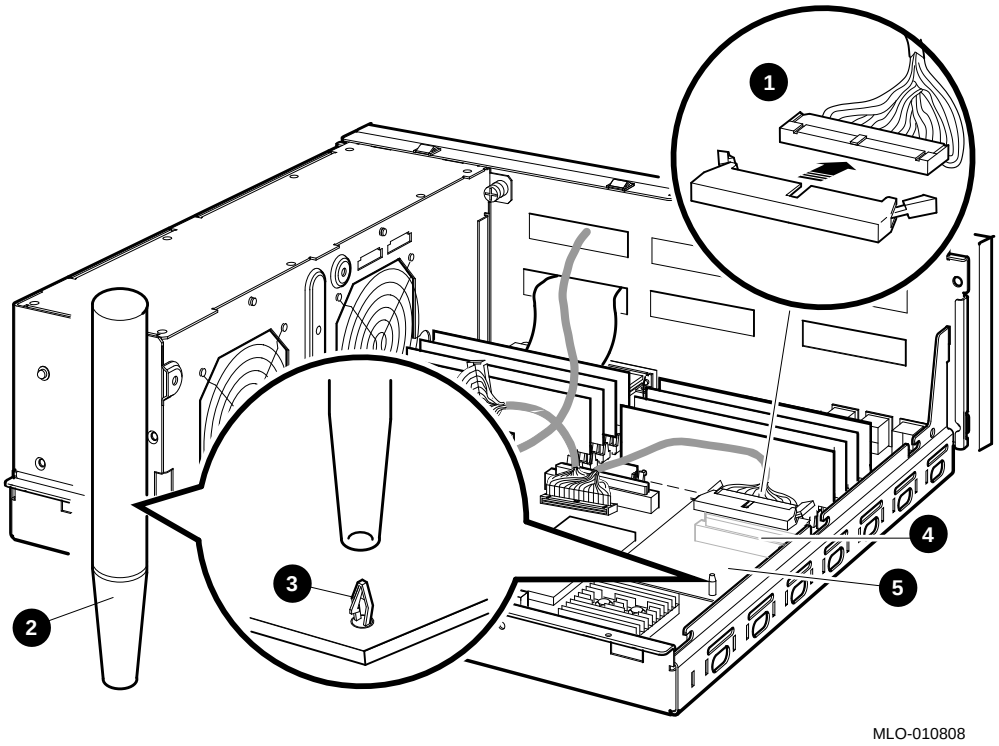


❶ DSSI Connector

❷ Standoff removal tool

❸ Standoff

❹ Backplane connector

❺ Single DSSI Card (P/N 54-21837-01)

g. Refer to Figure 1–15. Install the dual DSSI card ❶ (provided with the 2T-KFDDA-AF/DF kit) onto the backplane. Align the new card on the standoffs ❷ so that it is positioned above the backplane connector, then gently seat it onto the connector and the standoffs.

h. Connect the new external DSSI bus cable ❺ (provided with the 2T-KFDDA-AF/DF) into the DSSI card connector that is closest to the front of the system (see Figure 1–15).

i. Reconnect the internal DSSI bus cable ❹ into the DSSI card connector that is closest to the rear of the system (see Figure 1–15).

j. Replace the shelves by reversing step 11d.

k. Connect the internal SCSI connector by reversing step 11c.

l. Connect the internal DSSI bus connectors to all drives mounted on the shelves by reversing step 11b.

m. Connect the power cables by reversing step 11a.

❶ Dual DSSI Card (P/N 54-22444-01)

❷ Standoff

❸ Backplane Connector

❹ DSSI Connector (P/N 17-03544-01)

❺ DSSI Connector (P/N 17-03778-01)

12. Refer to Figure 1–16 and partially install the new rackmount top cover ❷.
13. If present, reinstall the DSSI connector for the DSSI cable (P/N 17-03778-01) (provided with the 2T-KFDDA-AF/DF kit) on the top cover using the screws saved in step 8b if you are upgrading a Model 100, or step 9d if you are upgrading a Model 100A, or provided with the 2T-KFDDA-AF/DF kit.
14. Connect the Q–bus cable to the CPU module (refer to Figure 4–5 for module locations).
15. Fully install the cover by tightening the two captive screws ❸ in the rear of the unit to hold the cover in place.

❶ DSSI/Q–bus cable connector ports

❷ Rackmount top cover (P/N 70-30948-01)

❸ Top cover screws (P/N 12-30338-05)

❹ Caution label (P/N 36-24385-01)

❶ VAX 4000 Model 100A medallion (P/N 74-37642-31)

❷ Rackmount top cover (P/N 70-30948-01)

### Step 4: Install the Shelf Assembly

**Warning**

**The VAX 4000 Model 100A system when mounted on the shelf weighs 27 kg (60 lbs) depending on the configuration. Ensure that you use the appropriate number of personnel when installing the shelf.**

**Note**

**If shelf is not assembled, see Appendix A for instructions.**

To install the shelf assembly, refer to Figure 1–18 and proceed as follows:

1. Lift the slide locking arms and the slide shelf out far enough to reach the screws ❶ and nuts ❷ holding the front mounting brackets ❺ to the slides ❹.
2. Ensure that the screws ❶ and nuts ❷ holding the front mounting brackets are tight. The front mounting bracket comes attached to the slide.
3. Install the rear mounting bracket ❸ to the slides ❹ as shown in Figure 1–18. Do not tighten the screws ❶.
4. Return the slides ❹ to the locked position.

**Note**

**Figure shows setup for standard cabinet depth (25 in). Slots used may differ depending on cabinet depth.**

❶ Screws (P/N 90-00063-22)

❷ Kep Nuts (P/N 90-06563-00)

❸ Rear Mounting Bracket (P/N 12-32829-01)

❹ Locking Slides (P/N 12-39896-01)

❺ Front Mounting Bracket (P/N 12-32831-01)

❻ Locking Slide Mechanism

2. Install the self-sticking bumpers ❺ (P/N 90-09538-01) on shelf as shown in Figure 1–21.
3. Position the system on the shelf with the I/O port facing the right side of the cabinet as viewed from the front.

❶ Slides

❷ Latch

❸ Shelf

❹ Screws (4) (P/N 90-09984-00)

❺ Bumpers (4) (P/N 90-09538-01)
**Use of bumpers is mandatory.**

### Step 6: Install Cable Management Bracket

Install the Cable Management Bracket in the rear of the cabinet (see Figure 1–22:

1. Install four U-nuts ❶ on cabinet rail.
2. Install cable management bracket ❸ to rails by inserting screws ❷ through the cable management bracket, then through the rail, then through the U-nuts.

**Note**

**Due to the large variety of available cabinets, it is beyond the scope of this manual to cover installation and dressing of cables within the cabinet, or placement of the cable management bracket. Refer to your system cabinet documentation or cabinet vendor for cabinet cabling instructions.**

❶ U-nuts (P/N 90-07785-01)

❷ Screws (P/N 90-00063-39)

❸ Cable Management Bracket (P/N 74-40319-01)

### Step 7: Install I/O Terminators and/or Option Cables

To install I/O terminators, console cable and power cord refer to Figure 1–23 and perform the following steps:

1. Connect the Console Terminal:
   a. Connect one end of the terminal cable ❶ to the modified modular jack (MMJ) port 3. The system is shipped with a label covering ports 0 and 1. After port 3 is properly identified as the console port, the OPA0 arrow label may be removed.
   b. Connect the other end of the terminal cable ❶ to the console terminal.
2. Connect the ThinWire Terminator:
   a. Assemble the T-connector and the two terminators to form a ThinWire terminator ❷.
   b. Connect the ThinWire terminator ❷ to the ThinWire Ethernet port.
3. Connect the SCSI Terminator:
   a. Connect the SCSI terminator ❸ to the SCSI port.
   b. Close the bail lock loops.
4. Connect the DSSI terminator ❹ to the DSSI port.
5. Connect the Power Cord:
   a. Ensure that the ON/OFF switch ❻ is in the OFF (O) position.
   b. Connect the power cord ❺ to the system unit.
   c. Connect the other end of the power cord to an ac power source.
6. Use four tie wraps (P/N 90-07880-00 Qty 2, and P/N 90-09617-00 Qty 2) to secure the console terminal cable and power cord to the cable management bracket.

❶ Terminal cable

❷ ThinWire terminator

❸ SCSI terminator

❹ DSSI terminator

❺ Power cord

❻ ON/OFF Switch

Refer to Appendix B and the *VAX 4000 Model 100A Operator Information Manual* for information on connecting cables to the system for the following options:

- Connect the I/O MMJ ports 0 through 1.
- Connect the I/O asynchronous connectors.
- Connect the I/O synchronous connectors.
- Connect the I/O RS232 full modem port.
- Connect the external DSSI cables.
- Connect the external SCSI cables.
- Connect the I/O Q–bus connectors.

**Note**

**Due to the large variety of available cabinets, it is beyond the scope of this manual to cover installation and dressing of cables within the cabinet, or placement of the cable management bracket. Refer to your system cabinet documentation or cabinet vendor for cabinet cabling instructions.**

❶ Cabinet rails

❷ Tabs (3)

❸ Cable barrier (P/N 74-47072-01)

❹ Screws (3) (P/N 90-00026-03)

❺ Rubber washer (3) (P/N 90-10837-01)

❻ Metal washer (3) (P/N 90-08200-00)

❼ Slides

❽ Shelf

### Step 9: Check the Power-Up Test Results

The power-up test can take several minutes to complete, depending on the number of options installed and the default console terminal settings you use.

To check the power-up test results:

1. Turn on the console terminal. Wait until the power-up test is complete. Refer to the terminal documentation for more information.
2. Check the terminal settings. Refer to the *VAX 4000 Model 100A Operator Information Manual* for the list of correct settings.
3. Refer to Figure 1–23 and turn on the system unit by setting the ON/OFF switch ❻ to the ON ( | ) position.
4. If the power-up test results on the screen are similar to the results in Example 1–1, the system has passed the power-up test. Go to step 10.
5. If the power-up test results on the screen are not similar to the results in Example 1–1, the system has not passed the power-up test. See Example 1–2 for a typical failure.

**Note**

**If a failure occurs, refer to *VAX 4000 Model 100A Troubleshooting and Diagnostics Information Manual.***

**Example 1–1: Successful Power-Up Test Screen**

```
KA52-A V1.1, VMB 2.14  ❶
Performing normal system tests.
72..71..70..69..68..67..66..65..64..63..62..61..60..59..58..57..
56..55..54..53..52..51..50..49..48..47..46..45..44..43..42..41..  ❷
40..39..38..37..36..35..34..33..32..31..30..29..28..27..26..25..
24..23..22..21..20..19..18..17..16..15..14..13..12..11..10..09..
08..07..06..05..04..03..
Tests completed.  ❸
>>>  ❹
```

❶ Central Processing Unit (CPU) Name, Firmware Version Number, and Virtual Memory Boot (VMB) Version Number

❷ Read-Only Memory (ROM) based diagnostics countdown

❸ Status Message

❹ Console Prompt

If SIMM_OD is not present or not plugged in correctly, the system responds with a display similar to the following example:

**Example 1–2: Unsuccessful Power-Up Test Screen**

```
KA52-A V1.1, VMB 2.14
Performing normal system tests.
72..71..70..69..68..67..66..65..64..63..62..
                                                        ❶
? Test_Subtest_DC_88  Loop_Subtest=05  Err_Type=FF   DE_NO_Memory_present.lis
Vec=0000  Prev_Errs=0000   P1=E04EE04E   P2=00000000   P3=00000000  P4=00001006
P5=00000000  P6=7F337F7F   P7=00000000   P8=00000000   P9=FFFF0000 P10=2006270C
r0=00000008  r1=21018000   r2=E04EE04E   r3=80000000   r4=01000000  r5=04000000
r6=00000002  r7=00000000   r8=00000000   r9=20140758  r10=FFFFFFFE r11=FFFFFFFF
 dser=0000 cesr=00000000 icsr=01 pcsts=F800 pcctl=FC00 cctl=00000006
 bcetsts=03E0 bcedsts=0400 cefsts=00007E80 nests=00 mmcdsr=01FFFE40
 mesr=00000000
                                                                  ❷
Error:  SIMM Set 0 (0A,0B,0C,0D), SSR = E04E
 SIMM_0A = 16MB      SIMM_0B = 16MB      SIMM_0C = 16MB      SIMM_0D = 00MB ??

Total of 0MB, 0 good pages, 0 bad pages, 0 reserved pages
Normal operation not possible. ❸

>>>
```

❶ Error Message

❷ Error Summary showing SIMM "0D" is missing

❸ Status Message

### Step 10: Install the Front Bezel

To install the front bezel:

1. Install four U-nuts ❶ and ball studs ❷ onto the cabinet rails ❹ as shown in Figure 1–25.

**Note**

**If the system is to be shipped in the cabinet, install the shipping strap and bracket (see Section 4.2).**

2. Lift the locks on the slides and slide the system into the cabinet.
3. Install the front bezel ❸ on the cabinet by aligning the mounting holes with the ball studs. Press the bezel against the ball studs.
4. If necessary, affix the self-adhesive medallion ❻ (provided with the system or with the 2T-KFDDA-AF kit) to the lower left corner of the bezel.

❶ U-nuts (P/N 90-07786-01)

❷ Ball studs (P/N 90-11337-01)

❸ Bezel (P/N 74-30961-01)

❹ Cabinet rails

❺ Bezel hand grips

❻ VAX 4000 Model 100A medallion (P/N 74-37642-31)

### Step 11: Connecting the System to a Network

For more information on connecting the system to a network, see the *VAX 4000 Model 100A Operator Information Manual.*

### Step 12: Connecting External Options to the System

For more information on connecting external options to the system, see the *VAX 4000 Model 100A Operator Information Manual.*

### Step 13: Booting the Operating System

If the hard disks are factory installed, then the system is supplied with factory installed software (FIS) on the system disk. Boot the operating system following the procedures in the *VMS Factory Installed Software User Guide*.

# Chapter 2

# Operator Access and Control Procedure

The Rack-Mountable VAX 4000 Model 100A is designed to be mounted in a cabinet enclosure. To access the operation and control switches, or to load media devices, the unit must be extended outside the cabinet by performing the following two steps:

1. Remove the front bezel by pulling on the bezel hand grips ❶ (see Figure 2–1).
2. Lift both slide locks and fully extend the slides.

For identification and description of all switches, indicators, operation of load media, and system setup for networks and external options, see the *VAX 4000 Model 100A Operator Information Manual* supplied with your system.

For a description of the Rack-Mountable VAX 4000 Model 100A console and boot device commands, as well as special system security features, refer to the *VAX 4000 Model 100A Customer Technical Information Manual* supplied with your system.

# Chapter 3

# Troubleshooting and Diagnostics

**Note**

**Before performing any troubleshooting or diagnostic tests, ensure that the end user has backed up all disks to their satisfaction and has shutdown the system software. It is the end user's responsibility to ensure all system software and data is backed up and the system is shutdown properly.**

Remove the cable barrier before installing any loopback or test cables. Refer to Figure 1–24.

For all troubleshooting and diagnostic information, refer to the *VAX 4000 Model 100A Troubleshooting and Diagnostics Information Manual*.

# Chapter 4

# Maintenance and FRU Replacement Procedures

**Note**

**Before performing any maintenance or FRU replacement procedures, ensure that the end user has backed up all disks to their satisfaction, and has shutdown the system software. It is the end user's responsibility to ensure that all system software and data has been backed up and the system is shutdown properly.**

This chapter provides procedures for:

- Accessing the Rack-Mountable VAX 4000 Model 100A
- Removing and installing the shipping strap and bracket
- Removing the enclosure cover
- Removing and replacing the internal Q–bus cables
- Removing and replacing the internal DSSI cable (P/N 17-03544-01)
- Removing and replacing the internal DSSI cable (P/N 17-03778-01)
- Removing and replacing the internal SCSI cable
- Removing and replacing the DSSI card (single or dual)

## 4.1 Access the Rack-Mountable VAX 4000 Model 100A

The Rack-Mountable VAX 4000 Model 100A is designed to be mounted in a cabinet enclosure. To access the unit, the unit must be extended outside the cabinet by performing the procedure described in Chapter 2.

## 4.2 Remove and Install the Shipping Strap and Bracket

To remove the shipping strap and bracket, perform the following steps:

**Note**

**The shipping bracket should be removed before removing the shipping strap, and the shipping strap should be installed before installing the shipping bracket.**

**Shipping Bracket**

- To install or remove the rear shipping bracket you must first access the rear of the cabinet (refer to your system cabinet documentation for the access procedure).
- To install the rear shipping bracket:
  a. Install four U-nuts ❷, ❺ to the cabinet rails on the right side of the cabinet, directly behind and above the system. See Figure 4–1 for hole locations.
  b. Install the rear shipping bracket ❶ to the cabinet rails using two Phillips head screws ❸.
  c. Attach the rear shipping bracket ❶ to the shelf assembly using two Phillips screws ❹.
- To remove the rear shipping bracket:
  a. Locate the rear shipping bracket ❶ on the right side of the cabinet, directly behind the system unit (see Figure 4–1).
  b. Remove two Phillips head screws ❹ attaching the rear shipping bracket to the shelf assembly. Install the screws into the empty U-nuts ❺ on the cabinet rail.

❶ Rear shipping bracket (P/N 74-46848-01)

❷ U-nuts (P/N 90-07786-00)

❸ Phillips screws (P/N 90-00063-39)

❹ Phillips screws (P/N 90-00063-39)

❺ U-nuts (P/N 90-07786-00)

### Shipping Strap

The shipping strap is held in place by a single screw (P/N 90-00063-39) located on top of the shelf. To remove the shipping strap, refer to Figure 4–2 and:

1. Remove the front bezel.
2. Pull the shelf out.
3. Remove the screw holding the strap in place.
4. Lift the strap from the end with the screw until it clears the top of the unit.
5. Push down on the strap at the front of the shelf to free the strap.

To install the shipping strap perform steps a through e in reverse order.

## 4.3 Remove the Rackmount Enclosure Cover (P/N 70-30948-01)

To remove the rackmount enclosure cover:

1. Fully extend the shelf containing the Rack-Mountable VAX 4000 Model 100A to be serviced from the cabinet. Observe the cables as the unit is being pulled out to ensure that they do not get pinched or caught in the cabinet.
2. Turn the power ON/OFF switch, located in the rear of the unit, to the OFF (O) position. Figure 1–23 shows the location of the ON/OFF switch.
3. Remove the cable barrier by loosening the three captive screws (see Figure 1–24.
4. Disconnect any cables that are connected to the enclosure cover I/O ports or any cables ❶ attached to the top cover ❷. Remove the ac power cord.
5. Loosen (do not remove) the two captive screws ❸ in the rear of the unit holding the cover in place (see Figure 4–3).

❶ Internal Q–bus cables and DSSI cables (two each, front and rear of bustle)

❷ Rackmount top cover (P/N 70-30948-01)

❸ Captive screws (P/N 12-30338-05)

❹ Caution label (P/N 36-24385-01)

6. Slide the top cover forward 4.4 cm (2 in) maximum and disconnect the internal Q–bus cables from the CPU module inside of the enclosure. Figure 4–5 shows the location of the internal Q–bus cable.
7. If present, remove the two DSSI connectors from the top cover by removing the four screws and pulling the cable straight back. See Figure 4–4.
8. Slide the cover completely off by pushing forward and upward. Ensure that the internal Q–bus and DSSI cables do not get caught on any modules or disk drives located inside of the enclosure.

To reinstall the cover:

1. Partially install the top cover.
2. If present, connect the two DSSI connectors by inserting them into the top cover bustle ports and installing the four screws that were removed in step 7 of the removal procedure (see Figure 4–4).
3. Install the top cover to within 4.4 cm (2 in) of the system unit.
4. Connect the internal Q–bus cables to the CPU module inside of the enclosure (see Figure 4–5 for module location).

❶ Q–bus connectors (P/N 17-03545-01)

❷ Q–bus mounting hardware (P/N 12-18672-01)

## 4.5 Remove and Replace the Internal DSSI Bus Cable (P/N 17-03544-01)

1. Access the unit according to the procedure in Section 4.1.
2. Remove the enclosure cover according to the procedure in Section 4.3.
3. Remove the DSSI external I/O cable by loosening the two cable screws and then pulling the cable straight back.
4. Remove the internal DSSI cable by removing the two screws (see Figure 4–7) and pulling the cable straight back.
5. Disconnect the internal DSSI cable from all internal drives and/or the DSSI card.

**Caution**

**Use the strain relief tabs on the cables when removing the cables. Failure to do so causes damage to the cables.**

6. Reinstall replacement cable by reversing steps 1 through 5.

## 4.6 Remove and Replace the External DSSI Bus Cable (P/N 17-03778-01)

To remove and replace the external DSSI bus cable (P/N 17-03778-01), perform the following procedure:

1. Access the unit according to the procedure in Section 4.1.
2. Remove the enclosure cover according to the procedure in Section 4.3.
3. Refer to Figure 4–8. Remove the upper and lower drive mounting shelves together as a single unit (it is not necessary to disassemble the shelves themselves). Unscrew all six screws from the shelves; leave the captive screws ❶ in position and save the Phillips screws ❷ for reinstallation of the shelves. Remove the internal power cables ❸.

❶ Captive Screws (4)

❷ Phillips Screws (2)

❸ Internal Power Cables

4. Disconnect the internal DSSI connectors from all drives mounted on the shelves. It is not necessary to disconnect the power cable from each drive. Figure 4–9 shows one drive as an example.

**Figure 4–9: Disconnecting Internal DSSI Connectors**

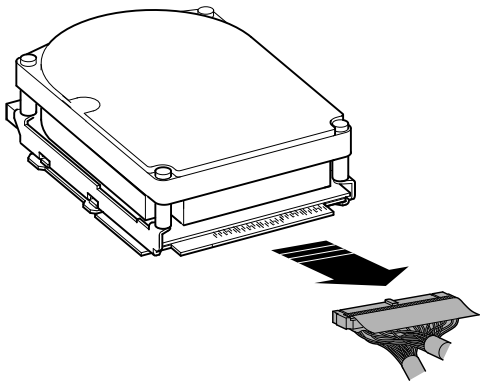

MLO-010804

5. Disconnect the internal SCSI cable from the backplane (see Figure 4–10):
   a. Release the memory module nearest the internal SCSI connector by pressing the tabs on each end, and tip it backward ❶.
   b. Disconnect the internal SCSI cable ❷ from its connector on the backplane.
6. Remove the shelves by sliding them forward ❸ and lifting them up ❹ and away from the enclosure (see Figure 4–10). Leave the memory module tipped backward until the shelves are reinstalled.

❶ Releasing the memory module and tipping it backward

❷ Internal SCSI cable

❸ Sliding shelves forward

❹ Lifting shelves up

❶ DSSI cable

❷ Removing DSSI cable from DSSI connector

8. To install the new cable, reverse this procedure.

## 4.8 Remove and Replace the DSSI Card

To remove and replace a DSSI card, either single or dual, follow this general procedure:

1. Access the unit according to the procedure in Section 4.1.
2. Remove the enclosure cover according to the procedure in Section 4.3.
3. Refer to Figure 4–13. Remove the upper and lower drive mounting shelves together as a single unit (it is not necessary to disassemble the shelves themselves). Unscrew all six screws from the shelves; leave the captive screws ❶ in position and save the Phillips screws ❷ for reinstallation of the shelves. Remove the internal power cables ❸.

❶ Captive Screws (4)

❷ Phillips Screws (2)

❸ Internal Power Cables

4. Disconnect the internal DSSI connectors from all drives mounted on the shelves. It is not necessary to disconnect the power cable from each drive. Figure Figure 4–14 shows one drive as an example.

**Figure 4–14: Disconnecting Internal DSSI Connectors**

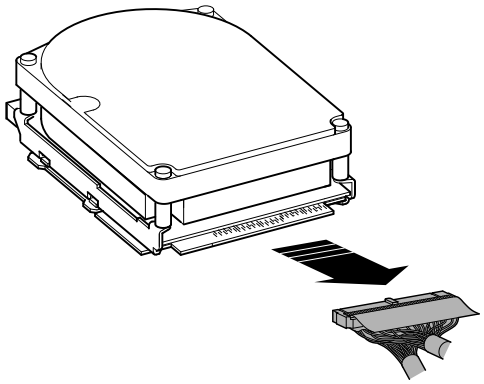

MLO-010804

5. Disconnect the internal SCSI cable from the backplane (see Figure 4–15):
   a. Release the memory module nearest the internal SCSI connector by pressing the tabs on each end, and tip it backward ❶.
   b. Disconnect the internal SCSI cable ❷ from its connector on the backplane.
6. Remove the shelves by sliding them forward ❸ and lifting them up ❹ and away from the enclosure (see Figure 4–15). Leave the memory module tipped backward until the shelves are reinstalled.

**Figure 4–15: Disconnecting the Internal SCSI Cable**

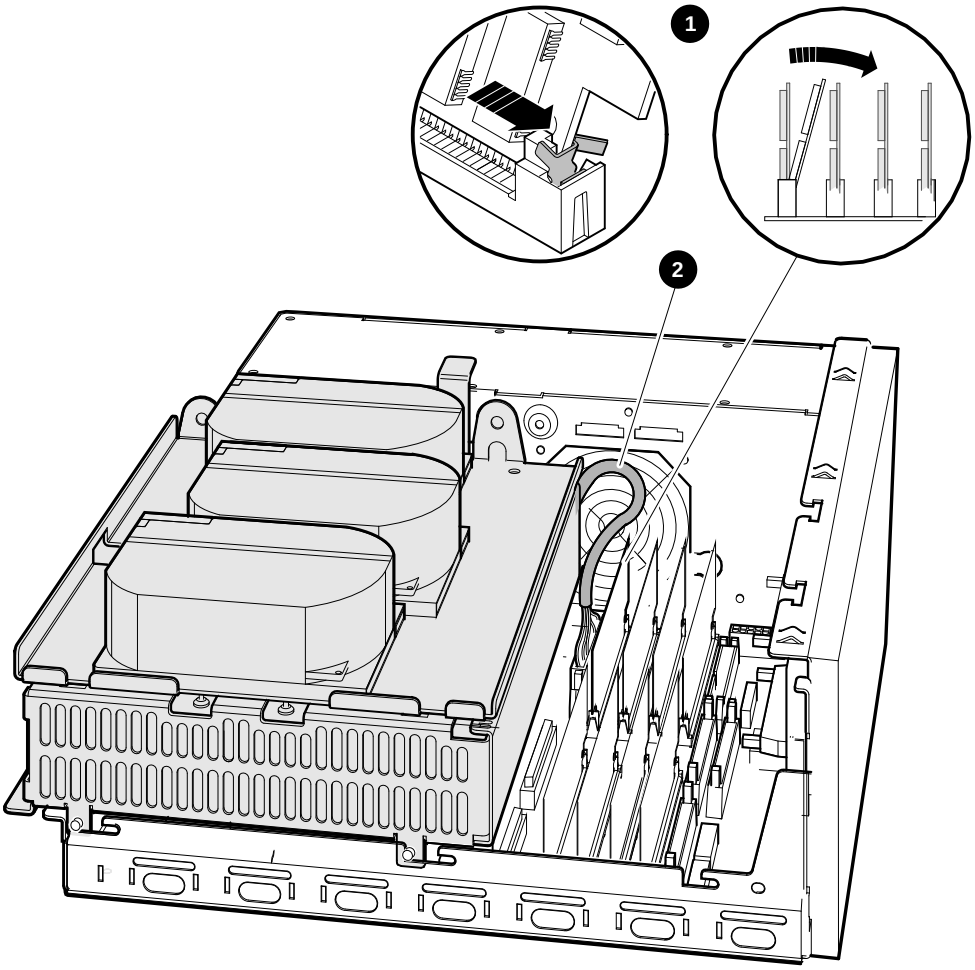


❶ Releasing the memory module and tipping it backward

❷ Internal SCSI cable

❸ Sliding shelves forward

❹ Lifting shelves up

❶ DSSI Connector

❷ Standoff removal tool

❸ Standoff

❹ Backplane connector

❺ Dual DSSI Card

9. Install the replacement DSSI card ❶ onto the backplane. Figure 4–17 shows installing a dual DSSI card. Align the new card on the standoffs ❷ so that it is positioned above the backplane connector, then gently seat it onto the connector and the standoffs.

10. Install the DSSI cables into the new DSSI card:

    a. Connect the external DSSI bus cable ❺, if present, into the DSSI connector that is closest to the front of the system. Figure 4–17 shows the installation of a dual DSSI card.

    b. Reconnect the internal DSSI bus cable ❹ into the DSSI connector that is closest to the rear of the system (see Figure 4–17).

11. Replace the shelves by reversing step 6.

12. Connect the internal SCSI connector by reversing step 5.

13. Connect the internal DSSI connectors to all drives mounted on the shelves by reversing step 4.

14. Connect the power cables by reversing step 3.

15. Reinstall the top cover by reversing the procedure in Section 4.3.

❶ Dual DSSI Card (P/N 54-22444-01)

❷ Standoff

❸ Backplane Connector

❹ DSSI Connector (P/N 17-03544-01)

❺ DSSI Connector (P/N 17-03778-01)

To remove and replace all other FRUs in the Rack-Mountable VAX 4000 Model 100A, refer to the following manuals:

- *VAX 4000 BA42B Enclosure Maintenance Manual*
- *VAX 4000 Model 100A KA52 CPU Maintenance Manual*
- *VAX 4000 BA42B Enclosure System Options Manual*

# Appendix A

# Shelf Assembly

This appendix describes how to assemble the shelf and slides that will be used to mount the Rack-Mountable VAX 4000 Model 100A in a cabinet.

The shelf assembly contains the following parts:

| Item | Description | Part Number |
|---|---|---|
| ❶ | Shelf | 74-46669-01 |
| ❷ | Slides | 12-39896-01 |
| ❸ | Mounting Brackets (Rear) | 12-32829-01 |
| ❹ | Mounting Brackets (Front) | 12-32831-01 |
| ❺ | Screws, #8, Qty 18 | 90-00063-22 |
| ❻ | Kep nuts, #8, Qty 8 | 90-06563-00 |
| ❼ | Interlock bracket, Qty 1[1] | 74-46988-01 |
| ❽ | Caution label, Qty 2 | 36-24385-01 |
| ❾ | Caution label, weight, Qty 1 | 36-32445-01 |
| ❿ | Part number label, Qty 1 | 36-13209-02 |

[1]**All systems are shipped with an interlock bracket. The interlock bracket only functions in systems containing a shelf interlock system.**

Use the procedure in this appendix to assemble the shelf.

❶ Screws (P/N 90-00063-22)

❷ Kep nuts (P/N 90-06563-00)

❸ Rear Mounting Bracket (P/N 12-32829-01)

❹ Locking Slides (P/N 12-39896-01)

❺ Front Mounting Bracket (P/N 12-32831-01)

❻ Slide Locking Mechanism

| | | | |
|---|---|---|---|
| ❶ | Shelf (P/N 74-46669-01) | ❻ | Shipping bracket mounting holes |
| ❷ | Slides | ❼ | Interlock bracket mounting holes |
| ❸ | Locking Latch | ❽ | Caution labels (Qty 2) (P/N 36-24385-01) |
| ❹ | Locking mechanism handle | ❾ | Caution label (P/N 36-32445-01) |
| ❺ | Screws (P/N 90-00063-22) (four each side) | ❿ | Part number label (P/N 36-13209-02) |

To install the shelf assembly in the cabinet, proceed with **Step 4: Install the Shelf Assembly** in Chapter 1.

# Appendix B

# Connecting Peripheral Device Cables

This appendix describes the procedures to connect cables for peripheral devices to the Rack-Mountable VAX 4000 Model 100A system:

- Connecting a peripheral cable to MMJ port 0 and 1
- Connecting a peripheral cable to asynchronous port A
- Connecting a peripheral cable to asynchronous port A (DHW42-CA)
- Connecting a peripheral cable to synchronous port 0 and 1
- Connecting a peripheral cable to the asynchronous modem control port
- Connecting cables to external SCSI ports
- Connecting cables to external DSSI ports
- Connecting cables to top cover bustle ports:
  - Q–bus cable ports
  - DSSI cable ports

## B.1 Connecting a Peripheral Cable to MMJ Port 0 and 1

To connect a peripheral to MMJ Port 0 and 1, insert cable as shown in Figure B–1.

## B.2 Connecting a Peripheral Cable to Asynchronous Port A

To connect a peripheral to asynchronous port A refer to Figure B–2 and:

1. Insert cable.
2. Close bail loops.

## B.3 Connecting a Peripheral Cable to Asynchronous Port A (DHW42-CA)

To connect a peripheral to asynchronous port A (DHW42-CA), refer to Figure B–3 and:

1. Slide clip ❷ to the left.
2. Insert cable ❶.
3. Slide clip ❷ to the right.

## B.4 Connecting a Peripheral Cable to Synchronous Port 0 and 1

To connect the cable to synchronous port 0 and 1, and the modem port, refer to Figure B–4 and perform the following steps:

1. Insert Cable
2. Screw clamping screws.

## B.5 Connecting a Peripheral Cable to the Asynchronous Modem Control Port

You can connect peripherals that use EIA-232 connectors to the asynchronous modem control port (port 2) on the back of the system unit. Alternatively, the supplied EIA-232 to DEC423 adapter (H8575-A) allows you to connect peripherals that use DEC423 connectors. To connect a peripheral to the asynchronous modem control port, refer to the following steps:

1. If you are connecting a peripheral using EIA-232 cables:
   a. Set the ON/OFF switch on the peripheral to the OFF (O) position.
   b. Connect the 25-pin D-sub connector of the peripheral cable to the asynchronous modem control port.
   c. If the connector has screws on either side, tighten them using a small screwdriver.
   d. Connect the other end of the peripheral cable to the correct port on the peripheral.
   e. Set the ON/OFF switch on the peripheral to the ON ( | ) position.
2. If you are connecting a peripheral using DEC423 cables:
   a. Set the ON/OFF switch to the OFF (O) position.
   b. Connect the 25-pin D-sub connector of the peripheral cable to the asynchronous modem control port.
   c. Tighten the screws on each side of the adapter using a small screwdriver.
   d. Connect the EIA-232 to DEC423 adapter to the asynchronous cable.
   e. Connect the DEC423 cable to the the MMJ port on the adapter.
   f. Connect the other end of the DEC423 cable to the correct port on the peripheral.
   g. Set the ON/OFF switch on the peripheral to the ON ( | ) position.

The following EIA-232 cable is available: 2T-BC22F-10. The peripheral you are using may require a null-modem extension cable. See the peripheral documentation or contact your local Digital Sales Representative for information on the correct null-modem cable you would use.

## B.6 Connecting Cables to SCSI Cable Ports

To connect the SCSI cable ports, refer to Figure B–5 and:

1. Remove the SCSI terminator from the SCSI port ❶
2. Insert cable ❷.

   To disconnect the SCSI cables, reverse the steps in this procedure.

## B.7 Connecting External DSSI Bus Cables to Internal DSSI Bus Cable Port

To connect the DSSI cable port, refer to Figure B–6 and:

1. Remove the DSSI terminator from the DSSI port ❶
2. Insert cable ❷ and tighten screws.

   To disconnect the DSSI cables, reverse the steps in this procedure.

# Appendix C

# Single to Dual DSSI Upgrade Procedure

To upgrade the Rack-Mountable VAX 4000 Model 100 or 100A single DSSI to a Rack-Mountable VAX 4000 Model 100A dual DSSI follow the procedure in this appendix. **If you are upgrading a VAX 4000 Model 100 or 100A desktop model to a Rack-Mountable VAX 4000 Model 100A, you must make the conversion by following the procedure described in Chapter 1, Step 3: Convert the Desktop VAX 4000 Model 100 or 100A to a Rack-Mountable VAX 4000 Model 100A.**

To upgrade a Rack-Mountable VAX 4000 Model 100 single DSSI to a Rack-Mountable VAX 4000 Model 100A dual DSSI you need the following kit:

- 2T-KFDDA-CF Single to Dual DSSI Upgrade Kit (see Figure C–1 for kit contents)

To upgrade a Rack-Mountable VAX 4000 Model 100A single DSSI to a Rack-Mountable VAX 4000 Model 100A dual DSSI you need the following kit(s):

- 2T-KFDDA-AF Single to Dual DSSI Upgrade Kit (see Figure C–2 for kit contents)

❶ Dual DSSI Card (Qty 1) (P/N 54-22444-01)

❷ Remote DSSI Bus Cable (Qty 1) (P/N 17-03778-01)

❸ Machine Screw 2.5 m (Qty 4) (P/N 90-10917-01)

❹ DSSI Terminator (Qty 2) (P/N 12-29258-01)

❺ Alignment Pin (Qty 4) (P/N 12-30363-01)

❻ Washer (Qty 4) (P/N 90-08877-00)

❼ Medallion, VAX 4000 Model 100A (Qty 1) (P/N 74-37642-31)

❽ Firmware Version 2.3 Upgrade Kit (Qty 1) (P/N QZ-004AA-FW) (refer to packing slip for kit contents)

❾ VMS Upgrade Version 5.5.2H4 Kit (Qty 1) (P/N QA-001AA-UW) (refer to packing slip for kit contents)

❿ VAX 4000 Model 100A Documentation Kit (Qty 1) (P/N QA-00HAA-GZ) (refer to packing slip for kit contents)

⓫ Rackmount Cover Assembly (P/N 70-30948-01)

⓬ Caution Label (Qty 1) (P/N 36-24385-01)

⓭ Installation manual (Qty 1) (P/N EK-465RA-IN)

❶ Dual DSSI Card (Qty 1) (P/N 54-22444-01)

❷ Remote DSSI Bus Cable (Qty 1) (P/N 17-03778-01)

❸ Machine Screw 2.5 m (Qty 4) (P/N 90-10917-01)

❹ DSSI Terminator (Qty 2) (P/N 12-29258-01)

❺ Alignment Pin (Qty 4) (P/N 12-30363-01)

❻ Washer (Qty 4) (P/N 90-08877-00)

1. Unpack and inspect all upgrade kits, and report any missing or damaged items to your local Digital sales representative.
2. Ensure the customer has backed up all data and shut down the system.
3. If required, install Firmware Version 2.3 Upgrade Kit (P/N QZ-004AA-FW) or a higher version per instructions included with the kit.
4. If required, install VMS Upgrade Version 5.5.2H4 (P/N QZ-001AA-UW) per instructions included with the kit.
5. Access the unit by extending the system outside the cabinet as described in Section 4.1.
6. Remove the enclosure cover as described in Section 4.3.
7. Refer to Figure C–3. Remove the upper and lower drive mounting shelves together as a single unit (it is not necessary to disassemble the shelves themselves). Unscrew all six screws from the shelves; leave the captive screws ❶ in position and save the Phillips screws ❷ for reinstallation of the shelves. Remove the internal power cables ❸.

❶ Captive Screws (4)

❷ Phillips Screws (2)

❸ Internal Power Cables

8. Disconnect the internal DSSI connectors from all drives mounted on the shelves. It is not necessary to disconnect the power cable from each drive. Figure Figure C–4 shows one drive as an example.

**Figure C–4: Disconnecting Internal DSSI Connectors**

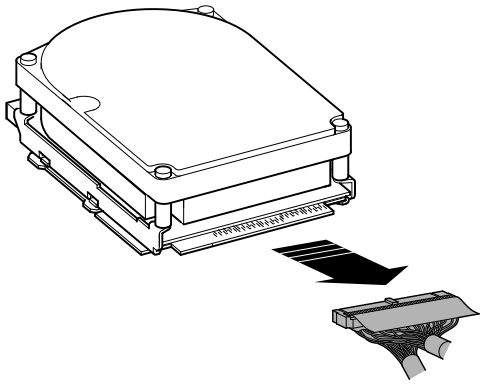

MLO-010804

9. Disconnect the internal SCSI cable from the backplane (see Figure C–5):
   - Release the memory module nearest the internal SCSI connector by pressing the tabs on each end, and tip it backward ❶.
   - Disconnect the internal SCSI cable ❷ from its connector on the backplane.
10. Remove the shelves by sliding them forward ❸ and lifting them up ❹ and away from the enclosure (see Figure C–5). Leave the memory module tipped backward until the shelves are reinstalled.

❶ Releasing the memory module and tipping it backward

❷ Internal SCSI cable

❸ Sliding shelves forward

❹ Lifting shelves up

11. Refer to Figure C–6. Disconnect the DSSI cable from the DSSI connector ❶.
12. Remove the single DSSI card ❺ by gently prying it loose from the backplane connector ❹. Use a standoff tool ❷ to compress the post so that the corner of the card can be lifted off of the standoff ❸. Lift the card out and place it on an antistatic mat.

**Figure C–6: Removing the Single DSSI Card**

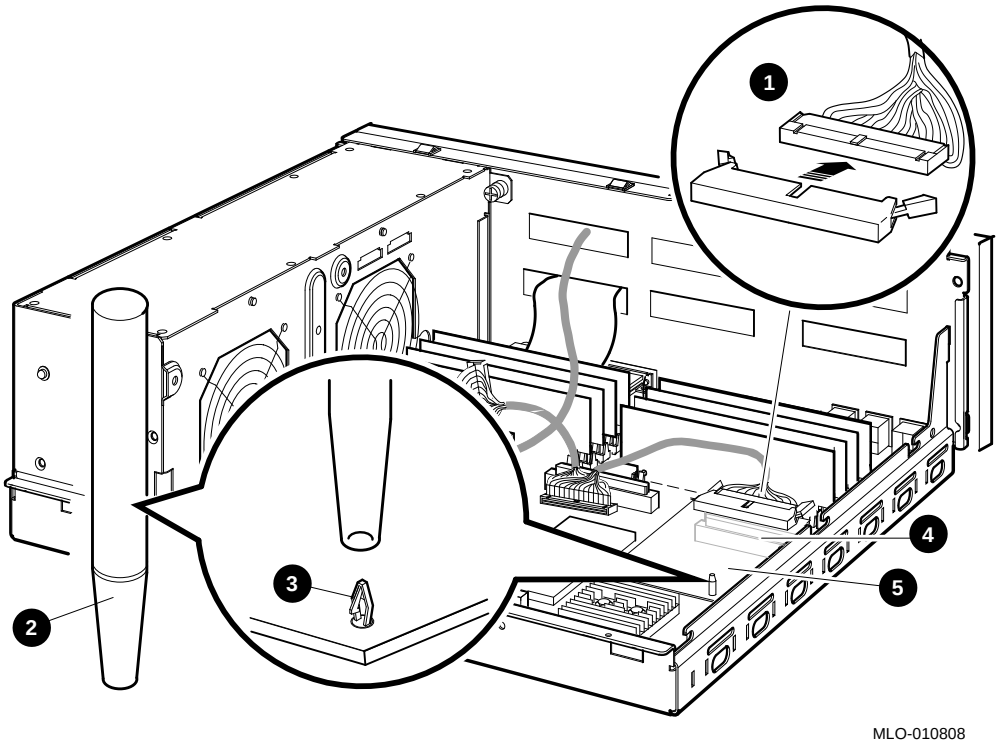


❶ DSSI Connector (P/N 17-03544-01)

❷ Standoff removal tool

❸ Standoff

❹ Backplane connector

❺ Single DSSI Card (P/N 54-21837-01)

13. Refer to Figure C–7. Install the dual DSSI card ❶ onto the backplane connector ❸. Align the new card on the standoffs ❷ so that it is positioned above the backplane connector, then gently seat it onto the connector and the standoffs.
14. Connect the new external DSSI bus cable ❺ into the DSSI connector that is closest to the front of the system (see Figure C–7).
15. Reconnect the internal DSSI bus cable ❹ into the DSSI connector that is closest to the rear of the system (see Figure C–7).
16. Replace the shelves by reversing step 11d.
17. Connect the internal SCSI connector by reversing step 11c.
18. Connect the internal DSSI connectors from all drives mounted on the shelves.
19. Connect the dc power cables by reversing step 11a.
20. Reinstall the enclosure cover by reversing the procedure in Section 4.3.
21. If necessary, install the caution label (P/N 36-24385-01) on the center of new top cover bustle so that it can be read when facing the rear of the unit.

❶ Dual DSSI Card (P/N 54-22444-01)

❷ Standoff

❸ Backplane Connector

❹ DSSI Connector (P/N 17-03544-01)

❺ DSSI Connector (P/N 17-03778-01)

# Appendix D

# Hardware Specifications

This chapter lists the hardware specifications of the following devices:

- System unit
- Internal SCSI device
- KA52-AA CPU
- Internal DSSI device

## D.1 System Unit Specifications

The following tables list the specifications for the Rack-Mountable VAX 4000 Model 100A.

**Table D–1: System Specifications: Rack-Mountable VAX 4000 Model 100A**

| Subject | Description |
|---|---|
| Processor | KA52 (NVAX). |
| Boot and diagnostic firmware ROM | 512KB. |
| DRAM memory | Expandable from 16MB using one set of four 4MB SIMMs to a maximum of 128MB using two sets of four 16MB SIMMs. These are MS44 memory options. |
| Hard disk | RF35, RF36 and RF31T (the system supports a maximum of three disk devices in the enclosure.) |
| Tape drive | TZ30, TZK10, TLZ06. |
| Compact disc drive | RRD42. |
| Terminals | Supports the VT series. |
| Interfaces | One or two DSSI buses, one synchronous SCSI bus, one ThinWire Ethernet port[1], one standard Ethernet port[1] (thickwire), three MMJ ports, one modem port. Optional: 8 or 16 additional asynchronous DEC423 MMJ ports or 8 additional synchronous modem ports, 2 synchronous ports. |
| Input voltage | Automatically adjusting ac input. Range: 100 V ac to 120 V ac or 220 V ac to 240 V ac. |
| Maximum inrush current | 2.0 amperes (A) at 220 V ac. |
| Maximum running current | 2.2 A at 110 V ac, 1.1 A at 220 V ac. |
| Steady state current | 2.2 A at 100 V ac, 1.1 A at 220 V ac. |
| Maximum power consumption | 200 watts (W). |
| Frequency | 49 Hz to 61 Hz. |

[1]Both Ethernet types cannot be used simultaneously.

**Table D–2: System Unit Metrics**

| System Unit | Weight[1] kg (lb) | Height cm (in) | Width cm(in) | Depth cm (in) |
|---|---|---|---|---|
| System | 18.0 (40.0) | 17.78 (7.0) | 46.35 (18.26) | 38.74 (15.25) |
| System with shelf | 27 (60) | 22.2 (8.75) | 48.3 (19.0) | 63.5 (25.0) |

[1]Depends on configuration

**Table D–3: System Storage Conditions**

| Storage Condition | Range or Value |
|---|---|
| Temperature range | 5°C to 50°C (41°F to 122°F) |
| Relative humidity | 10% to 95% at 66°C (noncondensing) |
| Altitude | 0 m to 2400 m (0 ft to 8000 ft) |
| Maximum wet bulb temperature | 32°C (90°F) |
| Minimum dew point | 2°C (36°F) |

**Table D–4: System Operating Conditions and Nonoperating Conditions**

| Operating Conditions | Range or Value |
|---|---|
| Temperature range | 10°C to 32°C (50°F to 90°F) with TZ30 tape drive; otherwise 10°C to 35°C (50°F to 97°F) |
| Temperature change rate | 11°C (20°F) per hour maximum |
| Relative humidity | 10% to 90% noncondensing (20% to 80% if tape device installed) |
| Altitude | 2400 m (8000 ft) at 36°C (96°F) |
| Maximum wet bulb temperature | 28°C (82°F) |
| Minimum dew point | 2°C (36°F) |

**Table D–4 (Cont.): System Operating Conditions and Nonoperating Conditions**

| Nonoperating Conditions | Range or Value |
|---|---|
| Temperature range | -40°C to 66°C (-40°F to 151°F) |
| Relative humidity | 10% to 95% at 66°C (151°F) |
| Altitude | 4900 m (16 000 ft) |
| Maximum wet bulb temperature | 28°C (82°F) |
| Minimum dew point | 2°C (36°F) |

## D.2 Internal DSSI Device Specifications

The following tables list the specifications for the internal DSSI devices.

**Table D–5: Hard Disk Drive Specifications**

| Formatted Storage Capacity | RF31T | RF35 | RF36 |
|---|---|---|---|
| Per Drive (MB) | 381 | 852 | 1600 |
| Blocks per track | 57 | 57 | 54-108 |
| Blocks per drive | 744 534 | 1 664 628 | 3 125 408 |
| Buffer size (KB) | 512 | 512 | 512 |
| **Performance** | **RF31T** | **RF35** | **RF36** |
| Transfer rate to or from media (MB/second) | 3.3 | 3.3 | 3.3 |
| Data transfer rate (MB /second) | 4.0 | 4.0 | 5.0 |
| Average seek time (milliseconds) | 5.5 | 9.5 | 9.7 |
| Maximum seek time, full stroke (milliseconds) | – | 19 | 19 |

**Table D–5 (Cont.): Hard Disk Drive Specifications**

| Performance | RF31T | RF35 | RF36 |
|---|---|---|---|
| Average latency (milliseconds) | 5.6 | 5.6 | 5.6 |
| Average access (milliseconds) | 11.1 | 15.1 | 15.3 |

**Table D–6: TZ30 Tape Drive Specifications**

| Subject | Description |
|---|---|
| Mode of operation | Streaming |
| Media | 12.77 mm (0.5 in) unformatted magnetic tape |
| Bit density | 2624 bits/cm (6667 bits/in) |
| Number of tracks | 22 |
| Transfer rate (at host) | 62.5Kb/s |
| Tape speed | 190 cm/s (75 in/s) |
| Track format | Multiple track serpentine recording |
| Cartridge capacity | 95MB, formatted (approximate) |

**Table D–7: TZK10 QIC Tape Drive Specifications**

| Subject | Description |
|---|---|
| Mode of operation | Streaming |
| Media | DC6320, DC6525, or Digital approved equivalent. See the *VAX 4000 Model 100A Operator Information Manual* |
| Track width: write | 0.1778 mm +0.0000, -0.0127 mm (0.0070 in +0.000, -0.0005 in) |
| Track width: read | 0.1270 mm +0.0127, -0.0000 mm (0.0050 in +0.0005, -0.0000 in) |

**Table D–7 (Cont.): TZK10 QIC Tape Drive Specifications**

| Subject | Description |
|---|---|
| Bit density | 16Kb/in |
| Number of tracks | 26 |
| Transfer rate | 200K bytes/s at average streaming mode, 1.5MB/s at SCSI maximum |
| Tape speed | 305 cm/s (120 in/s) |
| Track format | Multiple track serpentine recording |
| Cartridge capacity | 320MB or 525MB, formatted (approximate), depending on the QIC tape used. |

**Table D–8: TLZ06 Cassette Tape Drive Specifications**

| Subject | Description |
|---|---|
| Mode of operation | Streaming and start/stop |
| Media | TLZ04-CA, TLZ06-CA, or Digital approved equivalent. See the *VAX 4000 Model 100A Operator Information Manual* |
| Bit density | 114Mb/in |
| Transfer rate (sustained) | 183KB/s noncompression |
| Recording format | Digital Data Storage (DDS, DC) |

**Table D–9: RRD42 Compact Disc Drive Specifications**

| Subject | Description |
|---|---|
| Acceptable discs | CS-ROM mode-1 data discs<br>CD-ROM mode-2 data discs |
| Disc capacity | 600MB |
| Rotation speed: innermost track | 530 r/min at CLV = 1.4 m/s |
| Rotation speed: outermost track | 200 r/min at CLV = 1.2 m/s |
| Sustained data transfer rate | 150KB/s |
| Burst data transfer rate | 1.5MB/s |
| Access time: full stroke | 650 ms |
| Access time: average | 380 ms |

## KA52-AA CPU Specifications

The Model 100A system uses the timesharing KA52-AA CPU (54-21797-01).

| Central Processing Unit | |
|---|---|
| Addressing modes | General register: 8<br>Program counter: 4<br>Index: 9 |
| Clock rate | 286 MHz (14 ns cycle) |
| Data path width | 64 bits |
| Number of data types | Hardware: 9<br>Software emulated: 7 |
| Number of instructions | Hardware: 242<br>Microcode assisted: 21<br>Software emulated: 41 |

| **Central Processing Unit** | |
|---|---|
| General purpose registers | 16 (32-bit wide)<br>Interval timer: 1 (programmable)<br>Programmable timers: 2 |
| I/O bus interface | One Q22–bus interface with 8192 entry scatter/gather map |
| Q–bus backplane termination | 123 ohms |
| **Memory Management and Control** | |
| Page size | 512 bytes |
| Virtual address space | 4GB |
| Physical memory space | 128MB |
| Number of memory sets | 2 sets |
| **Architecture** | |
| Instruction prefetch buffer size | 16 bytes |
| Primary Cache | |
| Data stored | Instruction and data |
| Write algorithm | Write-through |
| Size | 8KB |
| Speed | 14 nanoseconds (READ) |
| Associativity | Two-way |
| Backup Cache | |
| Data stored | Instruction stream and data |
| Write algorithm | Write-back |
| Size | 128 Kbytes |
| Speed | 42 nanoseconds |
| Associativity | Direct mapped |

| Architecture | |
|---|---|
| Translation buffer | |
| Size | 96 entry |
| Associativity | Fully associative |
| Q22–bus address translation Q22–bus map cache | |
| Size | 16 entry |
| Associativity | Fully associative |
| Q22–bus I/O bus buffer size | |
| Input | 32 bytes |
| Output | 4 bytes |
| Q22–bus Maximum I/O bandwidth | |
| Block mode DMA read | 2.4MB/second |
| Block mode DMA write | 3.3MB/second |

| Ethernet Port | |
|---|---|
| Supported protocols | Ethernet V2.0 (IEEE 802.3) |
| Supported media types | Standard or ThinWire |
| Data path width | 1 bit |
| Data rate | 10Mb/second |
| Buffer size | |
| Transmit buffer | 128 bytes |
| Receiver buffer | 128 bytes |

| **Digital Storage System Interconnect (DSSI)** | |
|---|---|
| Number of DSSI interfaces | 1 (or 2 with KFDDA option) |
| Maximum number of supported devices | 7 (or 14 with KFDDA option) |
| Data path width | 8 bits |
| Maximum bandwidth | 4MB/second |
| Maximum queue I/O rate | 1200/second |
| Buffer size | |
| Transmit buffer | 256 bytes |
| Reciever buffer | 256 bytes |

| **Console Serial Lines** | |
|---|---|
| Interface standards | EIA RS-423-A/CCITT V.10 X.25 |
| | EIA RS-232-C/CCITT V.28 |
| | DEC-423 |
| Data format | 1 start bit, 8 data bits, 0 parity bits, 1 stop bit |
| Baud rates | 300; 600; 1200; 2400; 4800; 9600; 19 200; 38 400 |

| **Ordering Information** | |
|---|---|
| Included as part of base system. | |
| **Operating System Support** | |
| VMS | Version 5.5.2H4 |
| **Diagnostic Support** | |
| MicroVAX Diagnostic Monitor | Release 137A and later |
| Self-tests | Yes |
| **Related Documentation** | |
| EK-473AA-MG | *KA52 CPU System Maintenance* |

# Appendix E

# Upgrade and Return Forms

The Customer Service Engineer who performs an upgrade that requires returns must complete and return each of the three forms contained in this appendix.

Return the Customer Service Worksheet to the local contracts administrator.

Return one copy of the Customer Service Installation Receipt to the local CAS group and one copy to the customer.

Return one copy of the Returns Material Checklist with each module and item that you return.

Call your local CAS office to obtain the Return Authorization Number and the address for returning the modules and items.

Call the Sales Support Team (1-800-832-6277 or DTN 264-8990) if you need help.

The items to be returned are dependent on the upgrade and may be:

- M7606, KA630, KA650, KA655, or KA660 CPU Modules
- M7608, M7609, MS630, MS650-AA, MS650-BA, or MS650-BB Memory Modules
- Whole systems

All labor activity associated with this upgrade must be charged in the following manner:

- System type: DV-41RXX-XX or 2T-41TXX-XX
- Activity code: I
- Type of call: I
- Action taken: D
- P/L segment code: HPS