"THE MATERIAL HEREIN IS FOR INFORMATION PURPOSES ONLY AND IS SUBJECT TO CHANGE WITHOUT NOTICE. DIGITAL EQUIPMENT CORPORATION ASSUMES NO RESPONSIBILITY FOR ANY ERRORS WHICH MAY APPEAR HEREIN."

FIELD MAINTENANCE PRINT SET

"THIS DRAWING AND SPECIFICATIONS, HEREIN, ARE THE PROPERTY OF DIGITAL EQUIPMENT CORPORATION AND SHALL NOT BE REPRODUCED OR COPIED OR USED IN WHOLE OR IN PART AS THE BASIS FOR THE MANUFACTURE OR SALE OF ITEMS WITHOUT WRITTEN PERMISSION. COPYRIGHT © 1983 , DIGITAL EQUIPMENT CORPORATION."

TABLE OF CONTENTS

B-TC-877-0-1	FIELD MAINTENANCE PRINT SET
B-DD-877-0	877 POWER CONTROLLER (DD)
E-UA-877-0-DBU	877 POWER CONTROLLER
K-PL-877-0-DBP	877 POWER CONTROLLER (PL)
D-CS-877-0-DBU	877 POWER CONTROLLER (CS)
E-AD-7019938-0-DBU	FRONT PANEL ASSY
K-PL-7019938-0-DBP	FRONT PANEL ASSY (PL)
D-IA-7020657-0-DBU	HARNESS, CONTROL BOARD
K-PL-7020657-0-DBP	HARNESS, CONTROL BOARD
D-UA-5415690-0-0	A.C. CONTROL BOARD
K-PL-5415690-0-DBP	A.C. CONTROL BOARD (PL)
D-CS-5415690-0-1	A.C. CONTROL BOARD (CS)
A-SP-877-0-2	877 POWER CONTROLLER ENGINEERING SPECIFICATION

UNIT VARIATIONS COVERED BY THIS PRINT SET
877-A
877-B
877-C
877-D
877-E

Field Maintenance Print Set

Digital Equipment Corporation

PRINT SET ORDER NO.
MPØ1598

REVISIONS		
REV.	CHG. NO.	DATE
A	INITIAL	-
B	877-ML001	3/30/83

USED ON OPTION/MODEL

SHEET I OF 1

DRN. P. FAVINI	DATE 7SEP82	TITLE: 877 POWER CONTROLLER
CHK'D E. MCCULLOUGH	DATE 14JAN83	
PROJ. ENG. A. BARON	DATE 20JAN83	
FIELD SERV. R. KLABIS	DATE 20JAN83	

digital

SIZE	CODE	NUMBER	REV.
B	TC	877-0-1	B

DIST.

EN-01124-16-N675-(327)

DRB 124

" THE MATERIAL HEREIN IS FOR INFORMATION PURPOSES ONLY AND IS SUBJECT TO CHANGE WITHOUT NOTICE. DIGITAL EQUIPMENT CORPORATION ASSUMES NO RESPONSIBILITY FOR ANY ERRORS WHICH MAY APPEAR HEREIN."

DRAWING DIRECTORY

" THIS DRAWING AND SPECIFICATIONS, HEREIN, ARE THE PROPERTY OF DIGITAL EQUIPMENT CORPORATION AND SHALL NOT BE REPRODUCED OR COPIED OR USED IN WHOLE OR IN PART AS THE BASIS FOR THE MANUFACTURE OR SALE OF ITEMS WITHOUT WRITTEN PERMISSION." COPYRIGHT © 1983 DIGITAL EQUIPMENT CORPORATION.

UNIT VARIATIONS

VAR	TITLE
877-A	POWER CONTROLLER, 120V, 12A
877-B	POWER CONTROLLER, 240V, 12A
877-C	POWER CONTROLLER, 120V, 16A
877-D	POWER CONTROLLER, 120V, 24A
877-E	POWER CONTROLLER, 240V, 24A

REVISIONS

CHK	CHANGE NO.	REV.
—	INITIAL	A
EM	877-ML001	B

P.GAGNE 5 APR 83

A.BARON

USED ON OPTION/MODEL

SHEET 1 OF 3

DRN. P. FAVINI	DATE 7SEPT82	TITLE 877 POWER CONTROLLER
CHK'D E. McCULLOUGH	DATE 19JAN83	
PROJ. ENG. A. BARON	DATE 19JAN83	
PROD. R. KENNEDY	DATE 19JAN83	

digital

SIZE	CODE	NUMBER	REV.
B	DD	877-0-DBUO	B

DIST.

ML 1

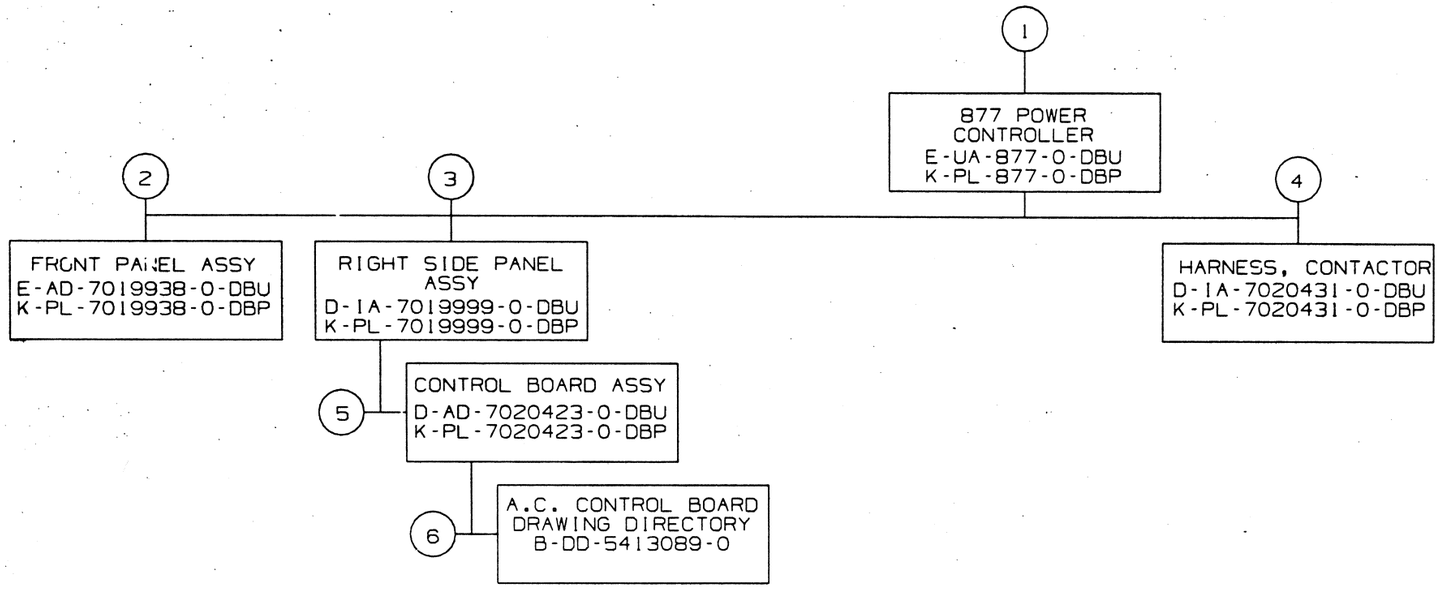

TITLE:		SIZE	CODE	NUMBER	REV.
877 POWER CONTROLLER	SHEET 2 OF 3	B	DD	877-0-DBU0	B

ML 1

FIND NO.	DRAWING NO.	DESCRIPTION	TYPE
1	MP01598	FIELD MAINTENANCE PRINT SET (MP)	—
	B-TC-877-0-1	877 POWER CONTROLLER	—
	E-UA-877-0-DBU	877 POWER CONTROLLER	E/M
	K-PL-877-0-DBP	877 POWER CONTROLLER (PL)	E/M
	D-CS-877-0-1	877 POWER CONTROLLER (CS)	E
	A-SP-877-0-2	POWER CONTROLLER SPECIFICATION-877	E/M
	D-MD-7427398-0-DBU	COVER, TOP	M
	D-IA-7427401-0-DBU	PANEL, LEFT SIDE	M
	C-MD-7427396-0-DBU	COVER	M
	D-IA-7427397-0-DBU	PANEL, REAR	M
	K-PL-7427397-0-DBP	PANEL, REAR (PL)	M
	A-PA-3700718-0-0	PACKAGING INSTRUCTION	—
2	E-AD-7019938-0-DBU	FRONT PANEL ASSY	E/M
	K-PL-7019938-0-DBP	FRONT PANEL ASSY (PL)	E/M
	D-MD-7427399-0-DBU	PANEL, FRONT	M
	K-PL-7427399-0-DBP	PANEL, FRONT (PL)	M
	C-IA-7422924-0-0	COVER PLATE	M
	C-IA-7428237-0-DBU	BRACKET	M
3	D-IA-7019999-0-DBU	RIGHT SIDE PANEL ASSY	E/M
	K-PL-7019999-0-DBP	RIGHT SIDE PANEL ASSY (PL)	E/M
	D-IA-7427400-0-DBU	PANEL, RIGHT SIDE	M
4	D-IA-7020431-0-DBU	HARNESS, CONTACTOR	E/M
	K-PL-7020431-0-DBP	HARNESS, CONTACTOR (PL)	E/M

FIND NO.	DRAWING NO.	DESCRIPTION	TYPE
5	D-AD-7020423-0-DBU	CONTROL BOARD ASSY	E/M
	K-PL-7020423-0-DBP	CONTROL BOARD ASSY (PL)	E/M
6	B-DD-5413089-0	A.C. CONTROL BOARD DRAWING DIRECTORY	E

TYPE: E ELECTRICAL
M MECHANICAL
E/M ELECTRO/MECHANICAL

digital

TITLE: 877 POWER CONTROLLER

SHEET 3 OF 3 | SIZE B | CODE DD | NUMBER 877-0-DBU0 | REV. B

DRB 108A

ML 1

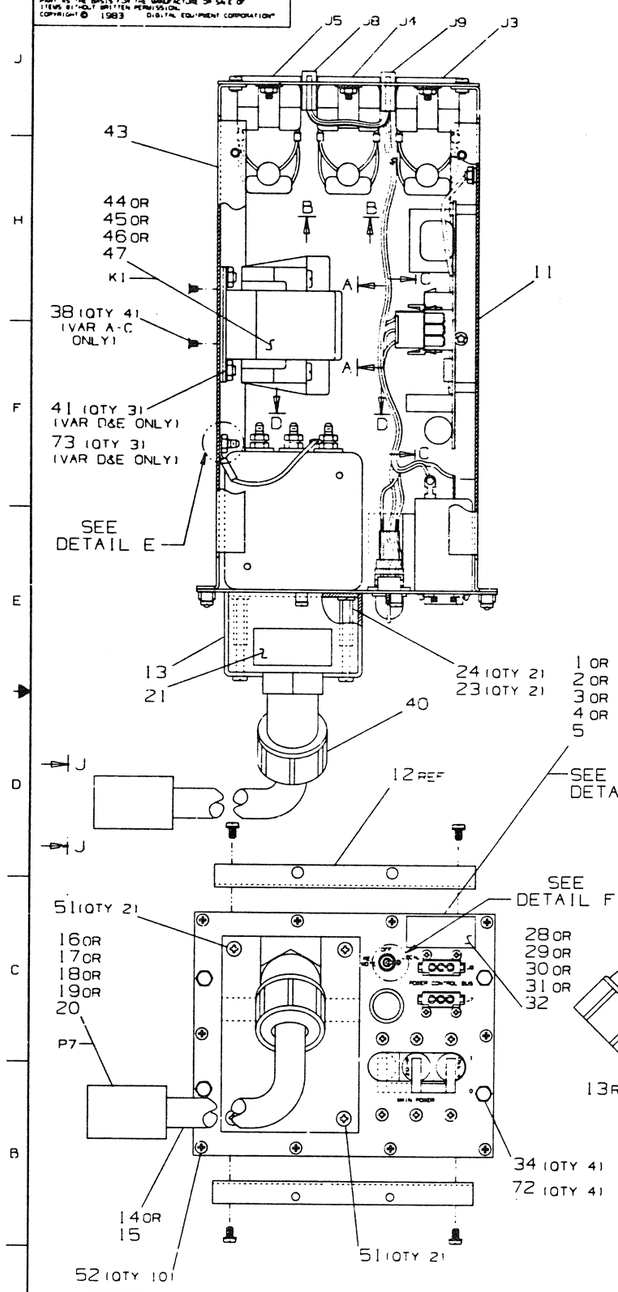

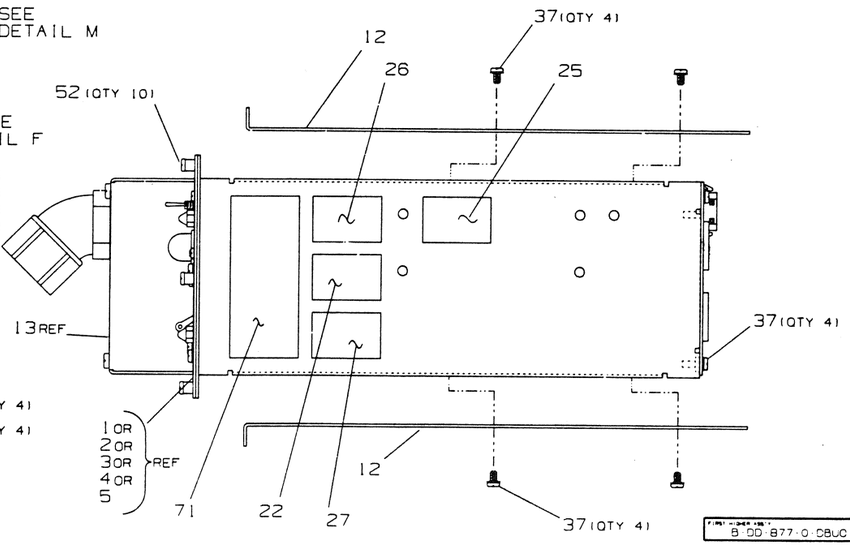

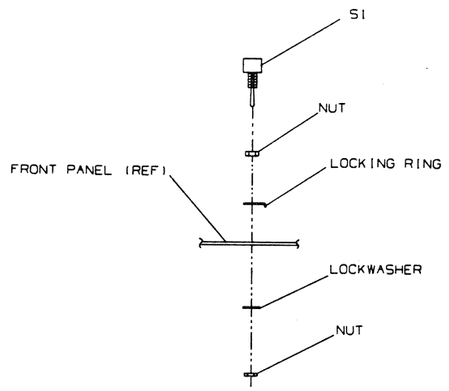

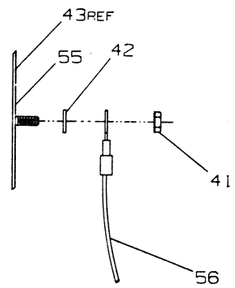

"THIS DRAWING AND SPECIFICATIONS, HEREIN, ARE THE PROPERTY OF DIGITAL EQUIPMENT CORPORATION AND SHALL NOT BE REPRODUCED OR COPIED OR USED IN WHOLE OR IN PART AS THE BASIS FOR THE MANUFACTURE OR SALE OF ITEMS WITHOUT WRITTEN PERMISSION.
COPYRIGHT © 1983 DIGITAL EQUIPMENT CORPORATION"

J5
J8
J4
J9
J3
43
44 OR
45 OR
46 OR
47
K1
B
A
C
D
11
38 (QTY 4)
(VAR A-C ONLY)
41 (QTY 3)
(VAR D&E ONLY)
73 (QTY 3)
(VAR D&E ONLY)
SEE DETAIL E
13
21
24 (QTY 2)
23 (QTY 2)
1 OR
2 OR
3 OR
4 OR
5
40
J
12 REF
SEE DETAIL M
SEE DETAIL F
51 (QTY 2)
16 OR
17 OR
18 OR
19 OR
20
P7
28 OR
29 OR
30 OR
31 OR
32
MAIN POWER
POWER CONTROL BUS
34 (QTY 4)
72 (QTY 4)
14 OR
15
52 (QTY 10)
51 (QTY 2)
S1
NUT
LOCKING RING
FRONT PANEL (REF)
LOCKWASHER
NUT
DETAIL "F"
SCALE: NONE
43 REF
55
42
41
56
DETAIL E
SCALE: NONE
VAR -A THRU -E
37 (QTY 4)
12
26
25
52 (QTY 10)
13 REF
37 (QTY 4)
1 OR
2 OR
3 OR
4 OR
5
REF
71
22
27
12
37 (QTY 4)

LEGEND

PART NO.	REV	VARIATION
877-A	C1	377-A POWER CONTROLLER, 120V, 12A
877-B	C1	877-B POWER CONTROLLER, 240V, 12A
877-C	C1	877-C POWER CONTROLLER, 120V, 16A
877-D	C1	877 D POWER CONTROLLER, 120V, 24A
877-E	C1	877-E POWER CONTROLLER, 240V, 24A

NOTES:

1. FOR 877 CIRCUIT SCHEMATIC SEE DWG D-CS-877-0-1.
2. THE BLU AND BRN WIRES FROM CONTACTOR (K1) TO CIRCUIT BREAKER (CB1) ARE TO BE ROUTED IN SUCH A MANNER AS TO NOT COME IN CONTACT WITH THE CONTROL BOARD ON THE RIGHT SIDE PANEL.
3. REQUIRED TORQUE LEVELS FOR CERTAIN ELECTRO-MECHANICAL CONNECTIONS:
   - A) 18±2 INCH LBS FOR TERMINALS ON LINE FILTER AND GROUND STUD.
   - B) 14±2 INCH LBS FOR 8-32 SCREW CONNECTIONS ON CIRCUIT BREAKER (CB1), OUTLETS J3-J5 (ITEMS 60 OR 61) AND LAMP SOCKET.
   - C) 60±5 INCH LBS FOR STRAIN RELIEF.
   - D) 12±2 INCH LBS FOR LOCAL-REMOTE SWITCH.
4. ~~TO ENSURE PROPER WIRE ALIGNMENT TO THE CONNECTOR, THE PLUG END OF THE CABLE SHOULD BE PER SECTION H-H.~~
5. LEADS ON CAPACITOR (ITEM 7OR 10) AND VARISTOR (ITEM 8 OR 9) TO BE APPROX. 1.125 IN. LONG. SEE WIRE TABLE.
6. LENGTHS IN WIRE TABLE ARE IN INCHES UNLESS OTHERWISE SPECIFIED. TOL ±.50.
7. VIEWS SHOWN ARE FOR REFERENCE ONLY. SEE WIRE TABLES AND PARTS LIST FOR CORRECT VARIATION REQUIREMENTS.
8. ~~PLACE SHRINK TUBING (ITEM 74) OVER PILOT LIGHT TERMINALS AND POWER BUS FILTER TERMINALS.~~
9. PLACE CAPACITORS C2 AND C3 (ITEMS 7 OR 10) AND MOV'S (ITEMS 8 OR 9) NO CLOSER THAN .10 INCHES FROM SIDE PANELS.
10. ~~WIRING FROM CONTROL BOARD HARNESS 3-1A-7020857-0-0BU. PUT SHRINK TUBING (ITEM 78) OVER S1 CONNECTORS~~
11. LABEL "P8" USING ITEM 77.

LAYER #6: FORMAT SHEETS 2 & 3
LAYER #5: WORK SHEET 3
LAYER #4: WORK SHEET 2
LAYER #3: FORMAT SHEET 1
LAYER #2: WORK SHEET 1
LAYER #1: INFORMATION
PLOT SCALE: 1.00
SYSTEM #20
PROGRAM VERSION: UGRAF D4.0
FILE NAME: 877-0-DBUC
TITLE: 877 POWER CONTROLLER
Z NO.: 5270

CAUTION: OFF SHEET PARTS LIST
SEE K-PL-877-0-DBP.

REVISIONS		
CHG	CHANGE NO.	REV.
/	INITIAL	A
LM	877 ML001	B
P. GAGNE 4/01/83		
A. BARON		
WM	877-ML003	C
M. JOSEPH 1SEPT83		
A. BARON		

DESCRIPTION	DRAWING NO.	PART NO.	ITEM NO.

UNLESS OTHERWISE SPECIFIED DIMENSIONS ARE IN INCHES AND THE FOLLOWING TOLERANCES APPLY (PER DEC STD ...)

FIRST USED ON B-DD-877-0-DBUC

THIRD ANGLE PROJECTION
DO NOT SCALE DRAWING
REMOVE BURRS AND BREAK SHARP CORNERS
MATERIAL SEE K-PL

DRN K.DAVAN	DATE 19JAN83	TITLE 877 POWER CONTROLLER
CHK'D E. McCULLOUGH	DATE 19JAN83	digital
DES. ENG. I. KRISHTAL	DATE 19JAN83	
RESP. ENG. A. BARON	DATE 19JAN83	
MFG. ENG. R. KENNEDY	DATE 19JAN83	
TOP DOC. B-DD-877-0-DBUO		

DOCUMENT NUMBER

SIZE	CODE	NUMBER	REV.
E	UA	877-0-DBU	C

SCALE NONE SHEET 1 OF 3

E UA 877-0-DBU C

"THIS DRAWING AND SPECIFICATIONS, HEREIN, ARE THE PROPERTY OF DIGITAL EQUIPMENT CORPORATION AND SHALL NOT BE REPRODUCED OR COPIED OR USED IN WHOLE OR IN PART AS THE BASIS FOR THE MANUFACTURE OR SALE OF ITEMS WITHOUT WRITTEN PERMISSION.
COPYRIGHT © 1983 DIGITAL EQUIPMENT CORPORATION"

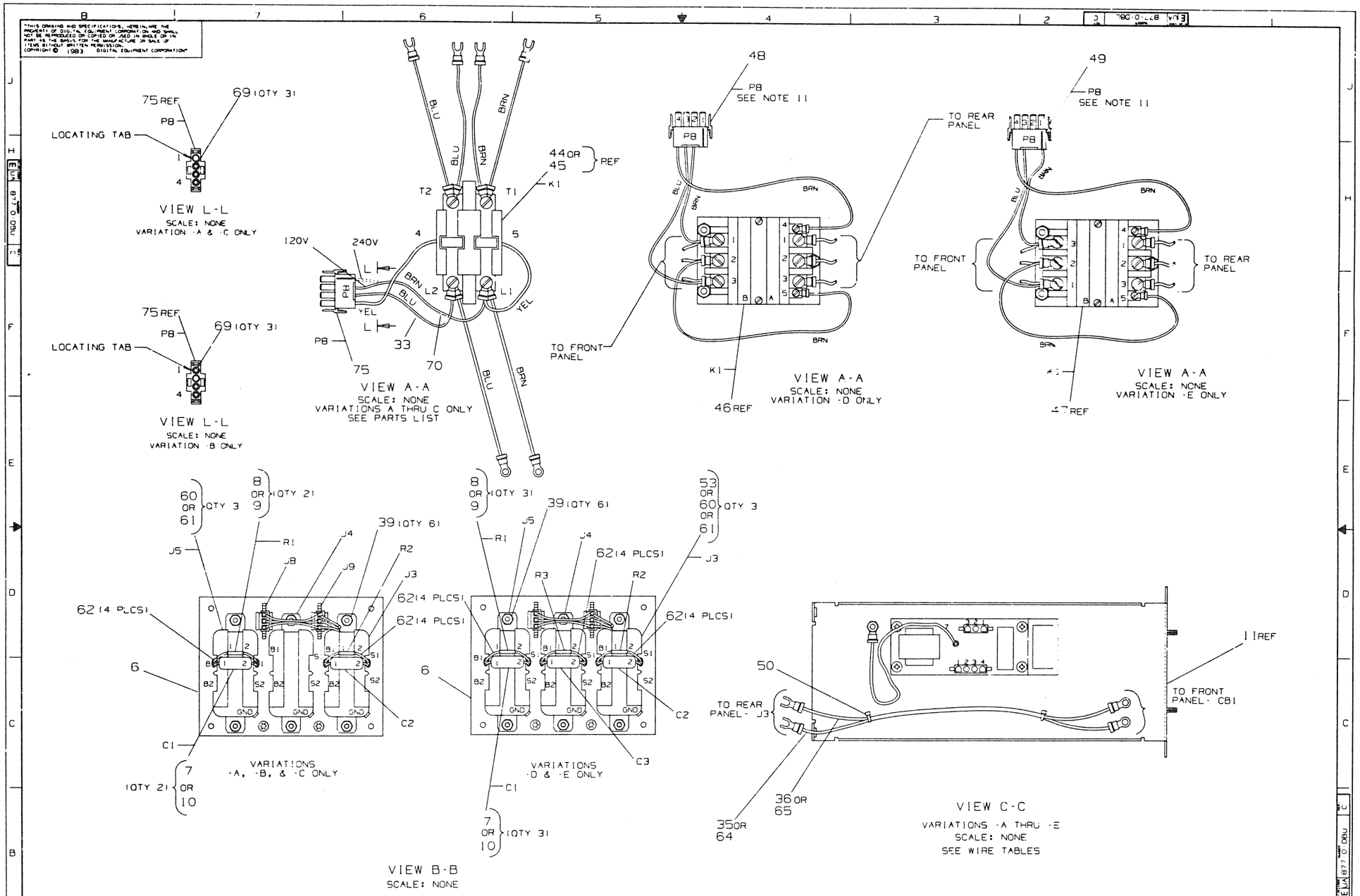

REVISION HISTORY		
DATE	ECO HISTORY	REV

TITLE 877 POWER CONTROLLER

DOCUMENT NUMBER		
S-CODE	NUMBER	REV
E LA	877 0 CBU	C

SCALE NONE SHEET 2 OF 3

ML1

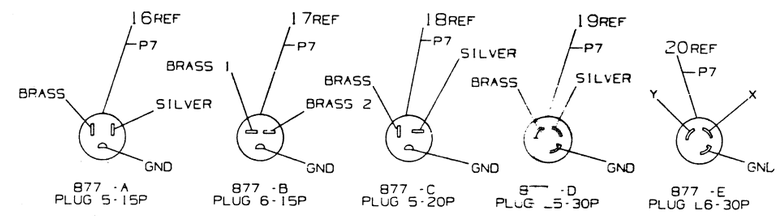

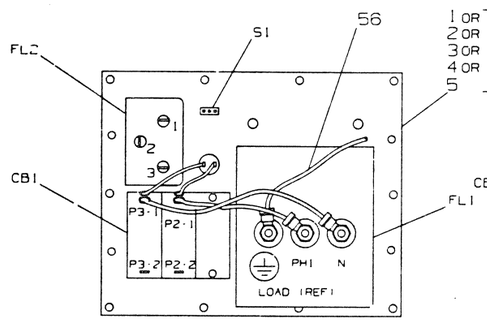

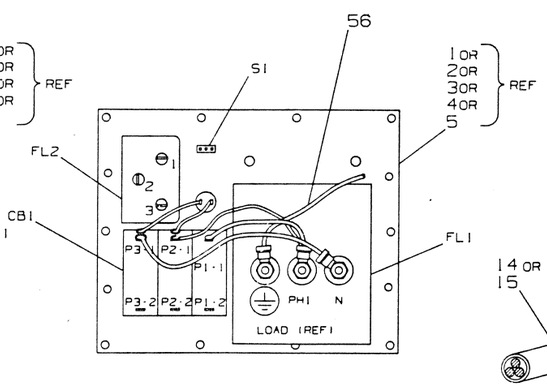

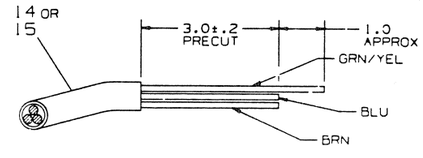

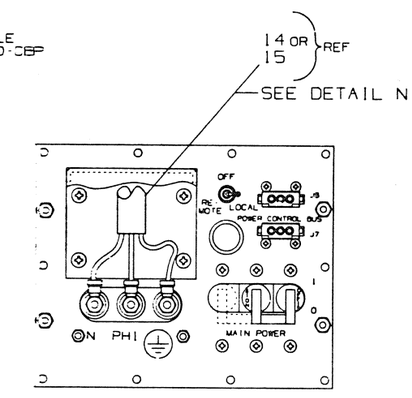

"THIS DRAWING AND SPECIFICATIONS, HEREIN, ARE THE PROPERTY OF DIGITAL EQUIPMENT CORPORATION AND SHALL NOT BE REPRODUCED OR COPIED OR USED IN WHOLE OR IN PART AS THE BASIS FOR THE MANUFACTURE OR SALE OF ITEMS WITHOUT WRITTEN PERMISSION.
COPYRIGHT © 1983 DIGITAL EQUIPMENT CORPORATION"

WIRE TABLE

ITEM NO.	DESCRIPTION			FROM		TO		REMARKS
	AWG	COLOR	LENGTH	CONNECTION	WITH	CONNECTION	WITH	
56	10	GRN/YEL	6.0	LF LOAD GND	54	ITEM 43 GND	54	SEE DETAIL E
11	22	ORN		POINT·1		FL2·1	SOLDER	VAR ·A THUR ·E
11	22	RED		POINT·2		FL2·1	SOLDER	
11	22	BLK		POINT·3		FL2·2	SOLDER	
36	12	BRN	9.0	CB1·P2·2	54	J3·B2	57	VAR ·A, ·B & ·C ONLY
35	12	BLU	9.0	CB1·P3·2	54	J3·S2	57	
36	12	BRN	5.5	K1·L1	54	CB1·P2·2	54	
35	12	BLU	5.5	K1·L2	54	CB1·P3·2	54	
36	12	BRN	4.0	K1·T1	57	J5·B2	57	
36	12	BRN	4.0	K1·T1	57	J4·B2	57	
35	12	BLU	4.0	K1·T2	57	J5·S2	57	
35	12	BLU	4.0	K1·T2	57	J4·S2	57	
64	10	BLU	9.0	CB1·P3·2	54	J3·S2	59	VAR ·D & ·E ONLY
65	10	BRN	9.0	CB1·P2·2	54	J3·B2	59	
65	10	BRN	5.5	K1·B·1	54	CB1·P2·2	54	
65	10	BRN	5.5	K1·B·2	54	CB1·P1·2	54	
64	10	BLU	5.5	K1·B·3	54	CB1·P3·2	54	
65	10	BRN	4.5	K1·A·1	54	J4·B2	59	
65	10	BRN	4.5	K1·A·2	54	J5·B2	59	
64	10	BLU	4.5	K1·A·3	54	J4·S2	59	
64	10	BLU	4.5	K1·A·3	54	J5·S2	59	
70	18	BRN	7.0	K1·5	58	K1·B·2	66	
48 OR 49	18	BRN		K1·4		P8·4		
	18	BLU		K1·B·3		P8·3		
48	18	BRN		K1·B·1		P8·2		VAR ·D ONLY
49	18	BRN		K1·B·1		P8·1		VAR ·E ONLY
7			SEE NOTE 5	C1·1	62	J5·B1	63	VAR ·A, ·C & ·D ONLY
8				R1·1				
7				C1·2	62	J5·S1	63	
8				R1·2				
7				C2·1	62	J3·B1	63	
8				R2·1				
7				C2·2	62	J3·S1	63	
8				R2·2				
10				C1·1	62	J5·B1	63	VAR ·B & ·E ONLY
9				R1·1				
10				C1·2	62	J5·S1	63	
9				R1·2				
10				C2·1	62	J3·B1	63	
9				R2·1				
10				C2·2	62	J3·S1	63	
9				R2·2				
7				C3·1	62	J4·B1	63	VAR ·D ONLY
8				R3·1				
7				C3·2	62	J4·S1	63	
8				R3·2				
10				C3·1	62	J4·B1	63	VAR ·E ONLY
9				R3·1				
10				C3·2	62	J4·S1	63	
9				R3·2				

WIRE TABLE

ITEM NO.	DESCRIPTION			FROM		TO		REMARKS
	AWG	COLOR	LENGTH	CONNECTION	WITH	CONNECTION	WITH	
15	12	GRN/YEL	15 FT.	FL1·LINE·GND	54	P7·GND	—	VAR ·A, ·C SEE DETAILS M&N
	12	BRN		FL1·LINE·PH1	54	P7·BRASS	—	
	12	BLU		FL1·LINE·N	54	P7·SILVER	—	
	12	GRN/YEL		FL1·LINE·GND	54	P7·GND	—	VAR ·B SEE DETAILS M&N
	12	BRN		FL1·LINE·PH1	54	P7·BRASS1	—	
	12	BLU		FL1·LINE·N	54	P7·BRASS2	—	
14	10	GRN/YEL		FL1·LINE·GND	54	P7·GND	—	VAR ·D SEE DETAILS M&N
	10	BRN		FL1·LINE·PH1	54	P7·BRASS	—	
	10	BLU		FL1·LINE·N	54	P7·SILVER	—	
	10	GRN/YEL		FL1·LINE·GND	54	P7·GND	—	VAR ·E
	10	BRN		FL1·LINE·PH1	54	P7·Y	—	
	10	BLU		FL1·LINE·N	54	P7·X	—	
				P8		J8 (CONTR BD)		VAR ·A THRU ·E
44	18	YEL	4.0	K1·5	—	K1·L1	67	VAR ·A & ·C ONLY
44	18	YEL	6.0	K1·4	—	P8·4	69	
33	18	BLU	4.0	K1·L2	68	P8·3	69	
70	18	BRN	4.0	K1·L1	67	P8·2	69	
45	18	YEL	4.0	K1·5	—	K1·L1	67	VAR ·B ONLY
45	18	YEL	6.0	K1·4	—	P8·4	69	
33	18	BLU	4.0	K1·L2	68	P8·3	69	
70	18	BRN	4.0	K1·L1	67	P8·1	69	
11	22	BLK		POINT·4		FL·2	SOLDER	VAR ·A THRU ·E
11	22	GRN		POINT·5		FL2·3	SOLDER	
11	22	GRN		POINT 6		FL2·3	SOLDER	
11	22	ORN		POINT·7		S1·1	SOLDER	
11	22	GRN		POINT·9		S1·3	SOLDER	
11	22	RED		POINT·8		S1·2	SOLDER	

16REF
P7
BRASS
SILVER
GND
17REF
P7
BRASS 1
BRASS 2
GND
18REF
P7
BRASS
SILVER
GND
19REF
P7
SILVER
BRASS
GND
20REF
P7
Y
X
GNL

877·A PLUG 5·15P

877·B PLUG 6·15P

877·C PLUG 5·20P

877·D PLUG L5·30P

877·E PLUG L6·30P

VIEW J-J
SCALE: NONE
SEE SHEET 1 & WIRE TABLE
REF TO LEGEND & K·PL·877·0·CBP

14 OR 15 REF
SEE DETAIL N
OFF
REMOTE
LOCAL
J8
POWER CONTROL BUS
J7
I
O
MAIN POWER
N
PH1

DETAIL M
FRONT PANEL
(ITEM 13 REMOVED)
SCALE: NONE

FL2
S1
56
1 OR
2 OR
3 OR
4 OR
5
REF
CB1
FL1
P3·1
P2·1
P3·2
P2·2
PH1
N
LOAD (REF)
1
2
3
FL2
S1
56
1 OR
2 OR
3 OR
4 OR
5
REF
CB1
FL1
P3·1
P2·1
P1·1
P3·2
P2·2
P1·2
PH1
N
LOAD (REF)
1
2
3

VARIATIONS
·A, ·B & ·C ONLY

VARIATIONS
·D & ·E ONLY

VIEW D-D
SCALE: NONE
(FRONT PANEL, REAR)
SEE WIRE TABLE

14 OR
15
3.0±.2
PRECUT
1.0
APPROX
GRN/YEL
BLU
BRN

DETAIL N
SCALE: NONE

REVISION HISTORY

DATE	ECO HISTORY	REV

TITLE	SIZE	CODE	NUMBER	REV
877 POWER CONTROLLER ASSY	E	UA	877·0·DBL	C
	SCALE NONE		SHEET 3 OF 3	

ML1

AUTOMATED BY PRTLST.4Q(50)

P A R T S L I S T

LINE	ITEM	DOCUMENT NUMBER	PART NUMBER	DESCRIPTION	QUANTITY PER VARIATION A	B	C	D	E
1	1	E-AD-7019938-0-DBU	7019938-00	FRONT PANEL ASSY. (877-A)	1	-	-	-	-
2	2	E-AD-7019938-0-DBU	7019938-01	FRONT PANEL ASSY (877-B)	-	1	-	-	-
3	3	E-AD-7019938-0-DBU	7019938-02	FRONT PANEL ASSY (877-C)	-	-	1	-	-
4	4	E-AD-7019938-0-DBU	7019938-03	FRONT PANEL ASSY (877-D)	-	-	-	1	-
5	5	E-AD-7019938-0-DBU	7019938-04	FRONT PANEL ASSY (877-E)	-	-	-	-	1
6	6	D-IA-7427397-0-DBU	7427397-01	PANEL,REAR	1	1	1	1	1
7	7	A-PS-1014430-0-0	1014430-01	.1 MFD 270V 20% M.POLYPROP	2	-	2	3	-
8	8	A-PS-1311996-0-0	1311996-00	VARISTOR 150VAC VOLT TRANS SUP	2	-	2	3	-
9	9	A-PS-1311996-0-0	1311996-02	VARISTOR 275VAC VOLT TRANS SUP	-	2	-	-	3
10	10	A-PS-1018866-0-0	1018866-00	.1 MFD 800V 20% POLYPROP	-	2	-	-	3
11	11	D-IA-7019999-0-DBU	7019999-00	PANEL, RIGHT SIDE ASSY.	1	1	1	1	1
12	12	D-MD-7427398-0-DBU	7427398-01	COVER,TOP	2	2	2	2	2
13	13	C-MD-7427396-0-DBU	7427396-01	COVER	1	1	1	1	1
14	14	A-PS-1700025-0-0	1700025-00	PWR CORDAGE 3COND 12AWG STO	1	1	1	-	-
15	15		9107548-00	PWR CORDAGE 3COND 10AWG ST	-	-	-	1	1
16	16		9008938-00	CONN,POWER 02P3W PLUG NEMA 05-1	1	-	-	-	-
17	17	A-PS-1215183-0-0	1215183-00	CONN,POWER 02P03W PLUG NEMA 05-	-	-	1	-	-
18	18		9008853-00	CONN,POWER 02P03W PLUG NEMA 06-1	-	1	-	-	-
19	19	A-PS-1211193-0-0	1211193-00	CONN,POWER 02P03W PLUG NEMA L05-	-	-	-	1	-
20	20	A-PS-1216886-0-0	1216886-00	CONN,POWER 02P03W PLUG NEMA LG -	-	-	-	-	1
21	21	A-PS-3617676-0-0	3617696-01	LABEL,DANGER HIGH VOLTAGE	1	1	1	1	1
22	22	A-PS-3613210-0-0	3613210-02	LABEL, UL FOIL ADH BACK	1	1	1	1	1
23	23		9006690-00	WASHER,HELICAL SPLIT SST	2	2	2	2	2
24	24		9000001-23	STANDOFF,MALE/FEMALE HEX 10-32	2	2	2	2	2
25	25	A-PS-3612063-0-0	3612063-00	LABEL, ,ADHESIVE I.D. FOR UL C	1	1	1	1	1
26	26	A-PS-3613211-0-0	3613211-01	DECAL,CLEAR PREPRINTED CSA 1-1/4	1	1	1	1	1
27	27	A-PS-3617614-0-0	3617614-00	LABEL,CAUTION OVER CURRENT PROTE	-	-	-	1	1
28	28	A-PS-3621131-0-0	3621131-01	LABEL,877A PWR CONTROL	1	-	-	-	-
29	29	A-PS-3621131-0-0	3621131-02	LABEL,877B PWR CONTROL	-	1	-	-	-
30	30	A-PS-3621131-0-0	3621131-03	LABEL,877C PWR CONTROL	-	-	1	-	-

REVISION HISTORY			BASIC PART NO: 00877										
ENG	ECO NUMBER	REV	SECTION A OF A	DRN: P. FAVINI	DATE: 07-OCT-82	D	I	G	I	T	A	L
A.B	INITIAL 877-ML001	A B	SECTION. VARIATION INDEX [A] A ,B ,C ,D ,E	CHK'D: E. MCCULLOUGH	DATE: 21-JAN-83	TITLE PARTS LIST 877 POWER CONTROLLER						
			[B]	DES.ENG.: I. KRISHTAL	DATE: 21-JAN-83							
			[C]	RESP.ENG.: A. BARON	DATE: 21-JAN-83	DOCUMENT NUMBER						
			[D]			SIZE	CODE	NUMBER			REV	
			[E]	MFG.ENG.: R. KENNEDY	DATE: 21-JAN-83	K	PL	877-0-DBP			B	
			[F]	ASSEMBLY NUMBER: E-UA-877-0-DBU	TOP DOCUMENT NUMBER: #B-DD-877-0-DBU	FILE NAME: Z5270B.PLS					EDIT # 21	

"THIS DRAWING AND SPECIFICATIONS HEREIN, ARE THE PROPERTY OF DIGITAL EQUIPMENT CORPORATION AND SHALL NOT BE REPRODUCED OR COPIED OR USED IN WHOLE OR IN PART AS THE BASIS FOR THE MANUFACTURE OR SALE OF ITEMS WITHOUT WRITTEN PERMISSION.
COPYRIGHT (C) 1983. DIGITAL EQUIPMENT CORPORATION "

PSC F82 2168

AUTOMATED BY PRTLST.4Q(50)

P A R T S   L I S T

SHEET A2 OF A2

LINE	ITEM	DOCUMENT NUMBER	PART NUMBER	DESCRIPTION	QUANTITY PER VARIATION A	B	C	D	E
31	31	A-PS-3621131-0-0	3621131-04	LABEL,877D PWR CONTROL	-	-	-	1	-
32	32	A-PS-3621131-0-0	3621131-05	LABEL,877E PWR CONTROL	-	-	-	-	1
33	33		9107786-66	WIRE, 18AWG(19/30)IPVC 300V1	A/R	A/R	A/R	-	-
34	34		9010439-01	NUT,CAP 6-32X 5/16AF	4	4	4	4	4
35	35		9107380-66	WIRE, 12AWG19/.0185IPVC 300V1	A/R	A/R	A/R	-	-
36	36		9107380-11	WIRE, 12AWG19/.0185IPVC 300V1	A/R	A/R	A/R	-	-
37	37		9010174-00	SCREW,SEMS PAN PHIL 6-	12	12	12	12	12
38	38		9000039-06	SCREW,MACH FLAT PHIL 4-	4	4	4	-	-
39	39		9006560-00	NUT,HEX EXT TOOTH LCKWSHR 6-32	6	6	6	6	6
40	40	A-PS-1214574-0-0	1214574-02	STRAIN RELIEF,PWR CORD	1	1	1	1	1
41	41		9006565-00	NUT,HEX EXT TOOTH LCKWSHR 10-32	1	1	1	4	4
42	42		9007651-00	WASHER,LOCK EXTERNAL STEEL	1	1	1	1	1
43	43	D-IA-7427401-0-DBU	7427401-01	PANEL,LEFT SIDE	1	1	1	1	1
44	44	A-PS-1214283-0-0	1214283-00	CONTACTOR, 20A,2P ,120V C	1	-	1	-	-
45	45	A-PS-1214283-0-0	1214283-01	CONTACTOR, 20A,2P ,240V C	-	1	-	-	-
46	46	A-PS-1211147-0-0	1211147-00	CONTACTOR, 30A,3P DBL BRK,600V,1	-	-	-	1	-
47	47	A-PS-1211147-0-0	1211147-01	CONTACTOR, 30A,3P DBL BRK,600V,2	-	-	-	-	1
48	48	D-IA-7020431-0-DBU	7020431-01	HARNESS CONTACTOR (877-D)	-	-	-	1	-
49	49	D-IA-7020431-0-DBU	7020431-02	HARNESS CONTACTOR (877-E)	-	-	-	-	1
50	50		9007031-00	TIE,CABLE BUNDL.DIA 0- 3/4"=101	A/R	A/R	A/R	A/R	A/R
51	51		9010174-01	SCREW,SEMS PAN PHIL 8-	4	4	4	4	4
52	52	A-PS-1221361-0-0	1221361-01	SCREW,CAPTIV PHIL 6-32	10	10	10	10	10
53	53	A-PS-1216885-0-0	1216885-01	CONN,POWER 02P05W RCPT NEMA 06-2	-	-	-	-	3
54	54		9007926-01	TERM,RING #10STUD CRIMP 10-1	19	19	19	17	17
55	55	A-PS-3612680-0-0	3612680-00	DECAL, GROUND SIGN PER 3E6 *	1	1	1	1	1
56	56		9107779-54	WIRE, 10AWG(105/30)IPVC 300V1	A/R	A/R	A/R	A/R	A/R
57	57		9009695-07	*** THIS ITEM IS NOT USED ***	-	-	-	-	-
58	58		9007970-00	TERM,QUICK .300TAB CRIMP 18-2	-	-	-	1	1
59	59		9009695-02	TERM,SPADE #8STUD CRIMP 10-1	6	6	6	-	-
60	60	A-PS-1212265-0-0	1212265-00	CONN,POWER 02P03W RCPT NEMA 05-2	3	-	3	3	-
61	61	A-PS-1211204-0-0	1211204-03	CONN,POWER 02P03W RCPT NEMA 06-1	0	3	-	-	-
62	62		9107278-09	TUBING,TEFLON .042ID	A/R	A/R	A/R	A/R	A/R
63	63		9009695-00	TERM,SPADE #8STUD CRIMP 14-1	4	4	4	6	6
64	64		9107390-66	WIRE, 10AWG(105/30)IPVC 300V1	-	-	-	A/R	A/R
65	65		9107390-11	WIRE, 10AWG(105/30)IPVC 300V1	0	-	-	A/R	A/R
66	66		9006999-00	TERM,RING #10STUD FLAG 16-1	0	-	-	1	1
67	67		9007928-00	TERM,RING #10STUD CRIMP 14-1	2	2	2	-	-
68	68		9007930-00	TERM,RING #10STUD CRIMP 16-2	1	1	1	-	-
69	69	A-PS-1212170-0-0	1212170-00	MATE-N-LOK 01SKT 20-14AWG .0850D	3	3	3	-	-
70	70		9107786-11	WIRE, 18AWG(19/30)IPVC 300V1	A/R	A/R	A/R	A/R	A/R
71	71	A-PS-3616073-0-0	3616073-00	LABEL,ID W/COPY VERTICAL	1	1	1	1	1
72	72		9006633-00	WASHER,LOCK INTERNAL STEEL	4	4	4	4	4
73	73		9006664-00	WASHER,FLAT SST	-	-	-	3	3
74	74		9107305-02	TUBING,SHRINK .187ID EXP	A/R	A/R	A/R	A/R	A/R
75	75	A-PS-1212167-0-0	1212167-01	MATE-N-LOK 04SKT(1X04).250CC HSG	1	1	1	-	-
76	76	A-PS-9107714-0-0	9107714-00	TUBING,SHRINK .093ID EXP	A/R	A/R	A/R	A/R	A/R

D	I	G	I	T	A	L	TITLE 877 POWER CONTROLLER	SECTION A OF A	SIZE	CODE	DOCUMENT NUMBER	REV
									K	PL	877-0-DBP	B

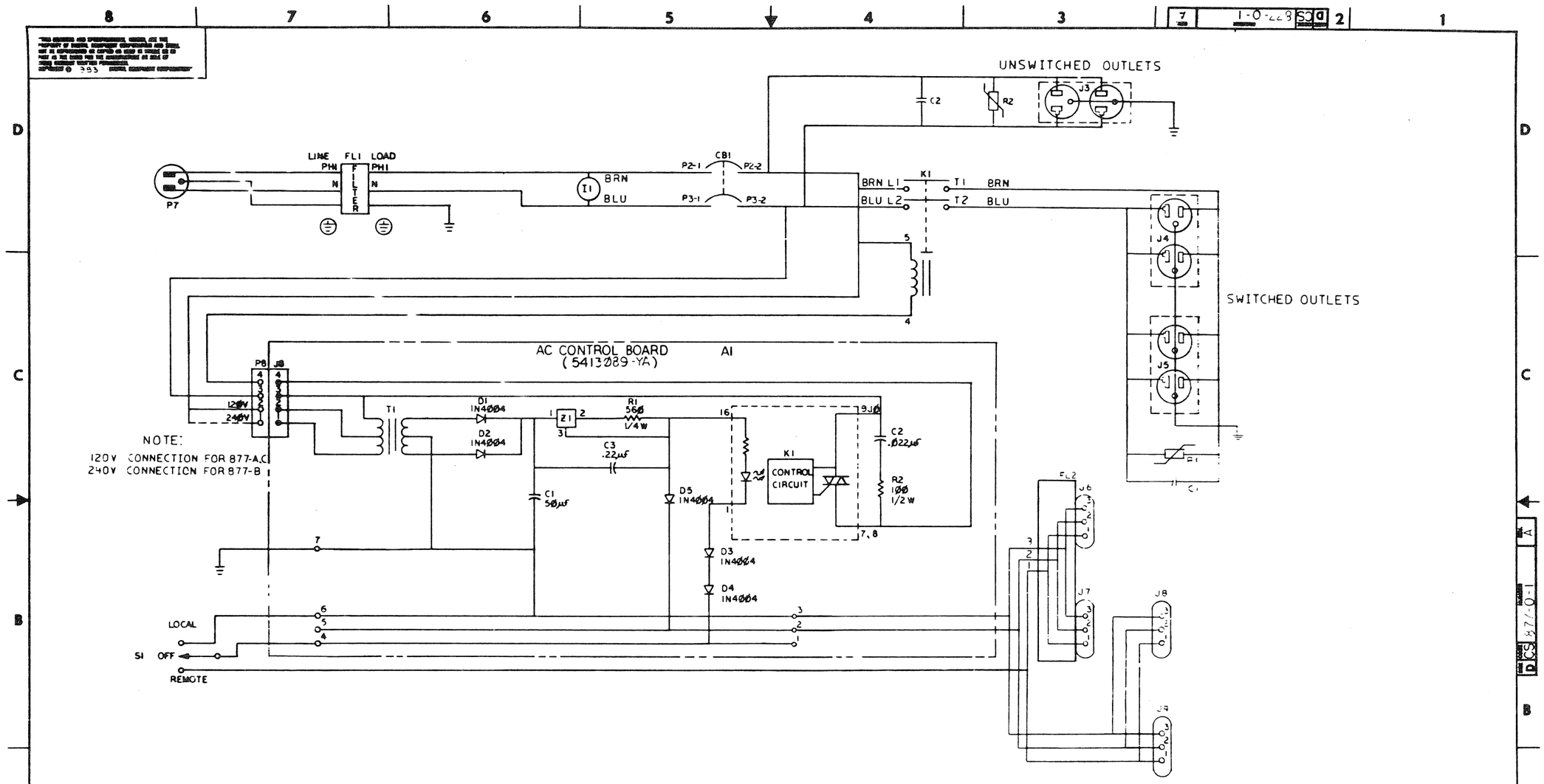

FOR VARIATIONS 877-A,B&C ONLY

(PLUGS AND RECEPTACLES SHOWN ARE FOR 877-A,C)

REVISIONS		
CHR	CHANGE NO.	REV
	INITIAL	A

DRAWN		FIRST USED ON 877
CHECKED		TITLE POWER CONTROL (877)
ENG		
PROJ ENG		
PROD		
NEXT HIGHER ASSY		
[illegible]-877-0-0		SIZE D CODE CS NUMBER 877-0-1 REV A
SCALE NONE		
SHEET 1 OF 2		DIST

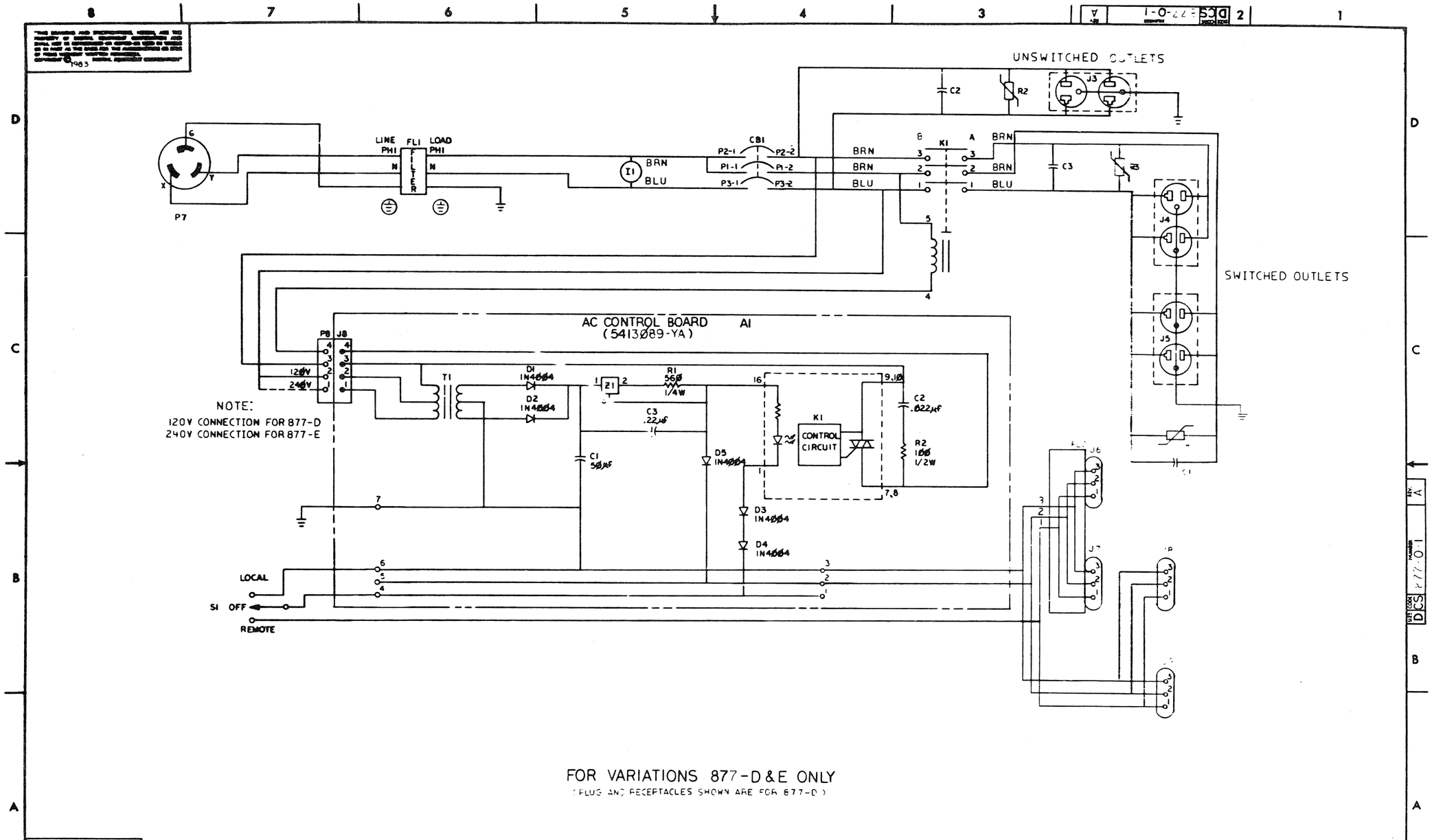

[illegible] © 1983 [illegible]

UNSWITCHED OUTLETS
SWITCHED OUTLETS
J3
J4
J5
J6
J7
R2
C2
C3
C1
P7
6
X
Y
LINE
PH1
FL1
FILTER
LOAD
PH1
N
N
I1
BRN
BLU
CB1
P2-1
P1-1
P3-1
P2-2
P1-2
P3-2
BRN
BRN
BLU
B
K1
A
BRN
BRN
BLU
1
2
3
4
5
AC CONTROL BOARD
(5413089-YA)
A1
P8
J8
120V
240V
T1
D1
1N4004
D2
1N4004
Z1
R1
560
1/4W
C3
.22µf
C1
50µf
D5
1N4004
D3
1N4004
D4
1N4004
16
K1
CONTROL
CIRCUIT
9,10
7,8
C2
.022µf
R2
100
1/2W
7
6
5
4
LOCAL
S1 OFF
REMOTE

NOTE:
120V CONNECTION FOR 877-D
240V CONNECTION FOR 877-E

FOR VARIATIONS 877-D&E ONLY

(PLUG AND RECEPTACLES SHOWN ARE FOR 877-D)

REVISIONS		
CHK	CHANGE NO.	REV

TITLE	SIZE	CODE	NUMBER	REV
POWER CONTROL (877)	D	CS	877-0-1	A
SCALE NONE	SHEET 2 OF 2	DIST.		

"THIS DRAWING AND SPECIFICATIONS, HEREIN, ARE THE PROPERTY OF DIGITAL EQUIPMENT CORPORATION AND SHALL NOT BE REPRODUCED OR COPIED OR USED IN WHOLE OR IN PART AS THE BASIS FOR THE MANUFACTURE OR SALE OF ITEMS WITHOUT WRITTEN PERMISSION. COPYRIGHT © 1983 DIGITAL EQUIPMENT CORPORATION"

WIRE TABLE

ITEM NO.	DESCRIPTION AWG	COLOR	LENGTH	FROM CONNECTION	WITH	STRIP	TO CONNECTION	WITH	STRIP	REMARKS
14	10	BRN	5.5	FL1-LOAD-PHI	13		CB1-P1-1	13		VAR 03&04 ONLY
15	10	BLU	6.5	FL1-LOAD-N	13		CB1-P3-1	13		
14	10	BRN	6.5	FL1-LOAD-PHI	13		CB1-P2-1	13		
18	12	BRN	5.5	FL1-LOAD-PHI	13		CB1-P2-1	13		VAR 00, 01, & 02 ONLY
16	12	BLU	5.5	FL1-LOAD-N	13		CB1-P3-1	13		
22	18	BRN	3.0	11 (+)	SOLDER		CB1-P2-1	19		VAR 00 THRU 04
21	18	BLU	3.0	11 (-)	SOLDER		CB1-P3-1	19		

LEGEND

PART NO.	REV	VARIATION
7019938-00	B1	FRONT PANEL ASSY FOR 877-A
7019938-01	B1	FRONT PANEL ASSY FOR 877-B
7019938-02	B1	FRONT PANEL ASSY FOR 877-C
7019938-03	B1	FRONT PANEL ASSY FOR 877-D
7019938-04	B1	FRONT PANEL ASSY FOR 877-E

NOTES:

1. REQUIRED TORQUE LEVELS:
   A. 18±2 INCH LBS FOR TERMINALS ON LINE FILTER (ITEM 5).
   B. 14±2 INCH LBS FOR SCREW CONNECTIONS ON CIRCUIT BREAKER CB1 (ITEM 2,3 OR 4)& LAMP MTG NUT.
   C. 12±2 INCH LBS FOR LOCAL-REMOTE SWITCH.
2. LENGTHS GIVEN IN WIRE TABLE ARE IN INCHES. TOL ±.50.

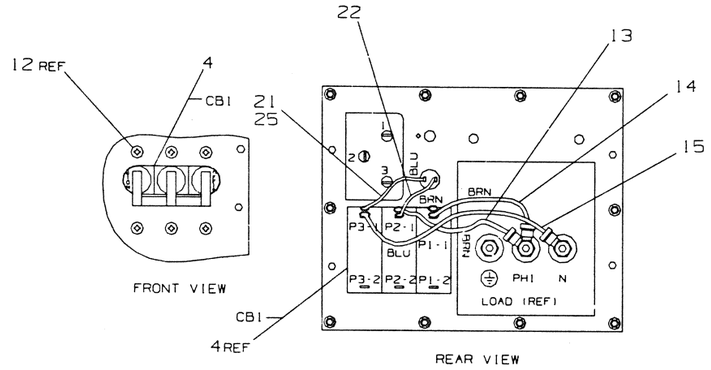

VARIATIONS 03 & 04 ONLY

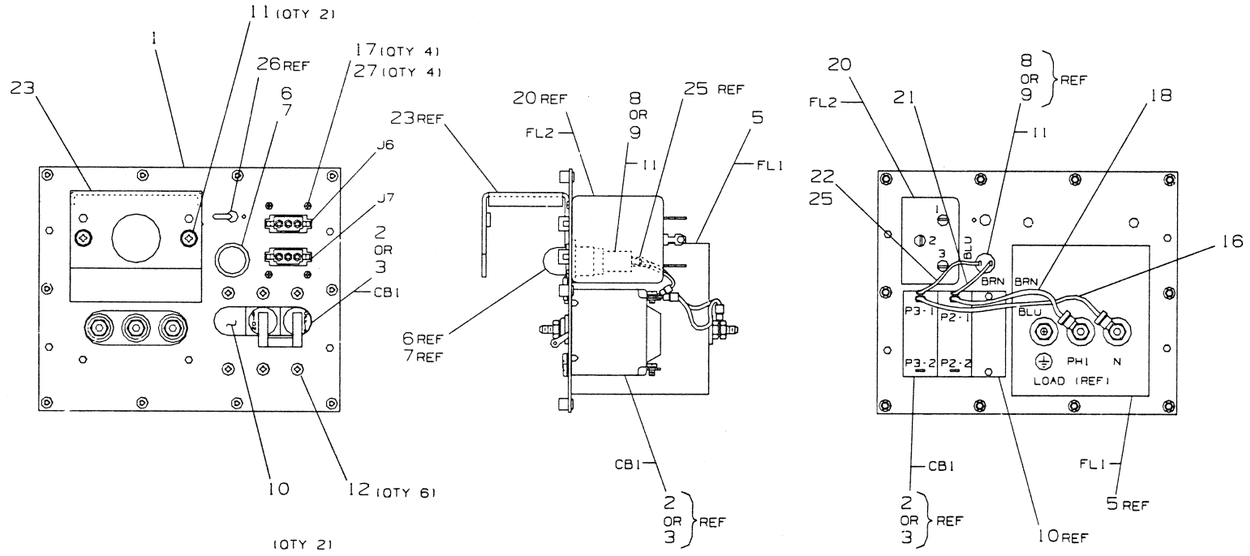

VARIATIONS 00,01,&02 ONLY

LAYER #3: FORMAT
LAYER #2: WORK
LAYER #1: INFORMATION
PLOT SCALE: 1.00
SYSTEM #20
PROGRAM VERSION: UGRAF D3.0
FILE NAME: 7019938-0-DBUA
TITLE: FRONT PANEL ASSY (877)
Z NO.: 5214

CAUTION: OFF SHEET PARTS LIST SEE K-PL-7019938-0-DBP.

REVISIONS			
SYM	DESCRIPTION	REV.	
	INITIAL	A	
	E.M 877 ML001	B	
	P. GAGNE 4/1/83		
	A. BARON		

DESCRIPTION	DRAWING NO.	PART NO.	ITEM NO.
UNLESS OTHERWISE SPECIFIED DIMENSIONS ARE IN INCHES AND THE FOLLOWING TOLERANCES APPLY PER DEC STD 114			

DIMENS ON RANGE IN INCHES

E-CA-877-0-DBU

DO NOT SCALE DRAWING
REMOVE BURRS AND BREAK ALL SHARP CORNERS
SEE K-PL

DRN P. FAVINI	DATE 30JUN82	TITLE FRONT PANEL ASSY (877)
DES ENG E. MCCOLLOUGH	DATE 19JAN83	
MECH ENG I. KRISHTAL	DATE 19JAN83	
PROJ ENG A. BARON	DATE 19JAN83	DOCUMENT NUMBER
MFG ENG R. KENNEDY	DATE 19JAN83	SIZE E CODE AD NUMBER 7019938-0-DBU REV. B
TOP SEC. E-AD-7019938-0-DBU		SCALE NONE SHEET 1 OF 1

MLI

AUTOMATED BY PRTLST.4Q(50)

P A R T S   L I S T

SHEET A1 OF A1

LINE	ITEM	DOCUMENT NUMBER	PART NUMBER	DESCRIPTION	QUANTITY PER VARIATION 00	01	02	03	04
1	1	D-MD-7427399-0-DBU	7427399-01	PANEL,FRONT	1	1	1	1	1
2	2	A-PS-1212124-0-0	1212124-08	CKT BKR 15.0 A 240V 2P SERIES TR	1	1	-	-	-
3	3	A-PS-1212124-0-0	1212124-07	CKT BKR 20.0 A 240V 2P SERIES TR	-	-	1	-	-
4	4	A-PS-1211196-0-0	1211196-04	CKT BKR 20,20,30A 250V SERIES TR	-	-	-	1	1
5	5	A-PS-1213070-0-0	1213070-00	FILTER,LINE 110-220V,50-60HZ 112	1	1	1	1	1
6	6	A-PS-1219281-0-0	1219281-00	LAMP NEON W/RESISTOR FOR 115-230	1	1	1	1	1
7	7	A-PS-1219295-0-0	1219295-01	LENS,LAMP HOLDER USE W/12-19294-	1	1	1	1	1
8	8	A-PS-1219294-0-0	1219294-01	HOLDER,NEON LAMP W/RESISTOR 2TER	1	-	1	1	-
9	9	A-PS-1219294-0-0	1219294-02	HOLDER,NEON LAMP W/68KOHM RESIST	-	1	-	-	1
10	10	C-IA-7422924-0-0	7422924-00	COVER PLATE	1	1	1	-	-
11	11		9010174-01	SCREW,SEMS PAN PHIL 8-	2	2	2	2	2
12	12		9010174-00	SCREW,SEMS PAN PHIL 6-	6	6	6	6	6
13	13		9007926-01	TERM,RING #10STUD CRIMP 10-1	4	4	4	6	6
14	14		9107390-11	WIRE, 10AWG(105/30)IPVC 300V1	-	-	-	A/R	A/R
15	15		9107390-66	WIRE, 10AWG(105/30)IPVC 300V1	-	-	-	A/R	A/R
16	16		9107380-66	WIRE, 12AWG19/.0185IPVC 300V1	A/R	A/R	A/R	-	-
17	17		9008301-01	SCREW,MACH PAN PHIL 4-	4	4	4	4	4
18	18		9107380-11	WIRE, 12AWG19/.0185IPVC 300V1	A/R	A/R	A/R	-	-
19	19		9000009-01	TERM,RING #3,4STUD CRIMP 16-2	2	2	2	2	2
20	20	A-PS-1221099-0-0	1221099-01	FILTER,POWER BUS	1	1	1	1	1
21	21		9107786-66	WIRE, 18AWG(19/30)IPVC 300V1	A/R	A/R	A/R	A/R	A/R
22	22		9107786-11	WIRE, 18AWG(19/30)IPVC 300V1	A/R	A/R	A/R	A/R	A/R
23	23	C-IA-7428237-0-DBU	7428237-01	BRACKET	1	1	1	1	1
24	24		9009545-01	SCREW,SEMS PAN PHIL 8-	2	2	2	2	2
25	25		9107305-02	TUBING,SHRINK .187ID EXP	A/R	A/R	A/R	A/R	A/R

REVISION HISTORY

ENG	ECO NUMBER	REV
---	INITIAL	A

BASIC PART NO: 7019938

SECTION A OF A

SECTION. VARIATION INDEX
[A] 00,01,02,03,04
[B]
[C]
[D]
[E]
[F]

DRN: P. FAVINI — DATE: 29-JUN-82
CHK'D: E. MCCULLOUGH — DATE: 21-JAN-83
DES.ENG.: I. KRISHTAL — DATE: 21-JAN-83
RESP.ENG.: A. BARON — DATE: 21-JAN-83
MFG.ENG.: R. KENNEDY — DATE: 21-JAN-83
ASSEMBLY NUMBER: E-AD-7019938-0-DBU
TOP DOCUMENT NUMBER: E-AD-7019938-0-DBU

D I G I T A L

TITLE PARTS LIST
FRONT PANEL ASS' (377)

DOCUMENT NUMBER

SIZE	CODE	NUMBER	REV
K	PL	7019938-0-DBP	A

FILE NAME: Z5211A.PLS
EDIT # 18

"THIS DRAWING AND SPECIFICATIONS HEREIN, ARE THE PROPERTY OF DIGITAL EQUIPMENT CORPORATION AND SHALL NOT BE REPRODUCED OR COPIED OR USED IN WHOLE OR IN PART AS THE BASIS FOR THE MANUFACTURE OR SALE OF ITEMS WITHOUT WRITTEN PERMISSION.
COPYRIGHT (C) 1983. DIGITAL EQUIPMENT CORPORATION "

"THIS DRAWING AND SPECIFICATIONS, HERE IN, ARE THE PROPERTY OF DIGITAL EQUIPMENT CORPORATION AND SHALL NOT BE REPRODUCED OR COPIED OR USED IN WHOLE OR IN PART AS THE BASIS FOR THE MANUFACTURE OR SALE OF ITEMS WITHOUT WRITTEN PERMISSION.
COPYRIGHT© 1983 DIGITAL EQUIPMENT CORPORATION"

WIRE TABLE

ITEM NO.	DESCRIPTION AWG	COLOR	FROM POINT	CONN	STRIP	WITH	TO POINT	CONN	STRIP	WITH	LENGTHS
10	22	ORG	1	FL2-1	.25	SOLDER	7	S1-1	.25	SOLDER	5.00
5	↑	RED	2	FL2-1	↑	↑	18	J8-1		ITEM4	11.75
6		BLK	3	FL2-2			12	P5-2		ITEM3	6.00
6		BLK	4	FL2-2			20	J8-2		ITEM4	11.75
7		GRN	5	FL2-3			11	P5-3		ITEM3	6.00
7		GRN	6	FL2-3			22	J8-3		ITEM4	11.75
5		RED	8	S1-2	↓	↓	13	P5-1		ITEM3	7.75
7		GRN	9	S1-3	.25	SOLDER	10	P5-3		ITEM3	7.75
5		RED	14	J9-1		ITEM4	17	J8-1		ITEM4	4.50
6	↓	BLK	15	J9-2		ITEM4	19	J8-2		ITEM4	4.50
7	22	GRN	16	J9-3		ITEM4	21	J8-3		ITEM4	4.50

LEGEND

PART NO.	REV	VARIATION
7020657-01	B1	AS SHOWN

NOTES:

1. USE TIE WRAPS (X) ITEM 9 APPROXIMATELY EVERY 3 INCHES WHEN NECESSARY AND AT EVERY BREAKOUT POINT.
2. CONNECTORS TO BE LABELED WITH COMPONENT IDENTIFIERS ITEMS 11 & 12.
3. UNLESS OTHERWISE NOTED ALL LENGTHS ARE IN INCHES.
4. POSITION OF KEYING SLOT ON SWITCH BARREL DETERMINES PIN 1 (AS SHOWN).
5. PLACE SHRINK TUBING (ITEM 16) OVER SWITCH TERMINALES.

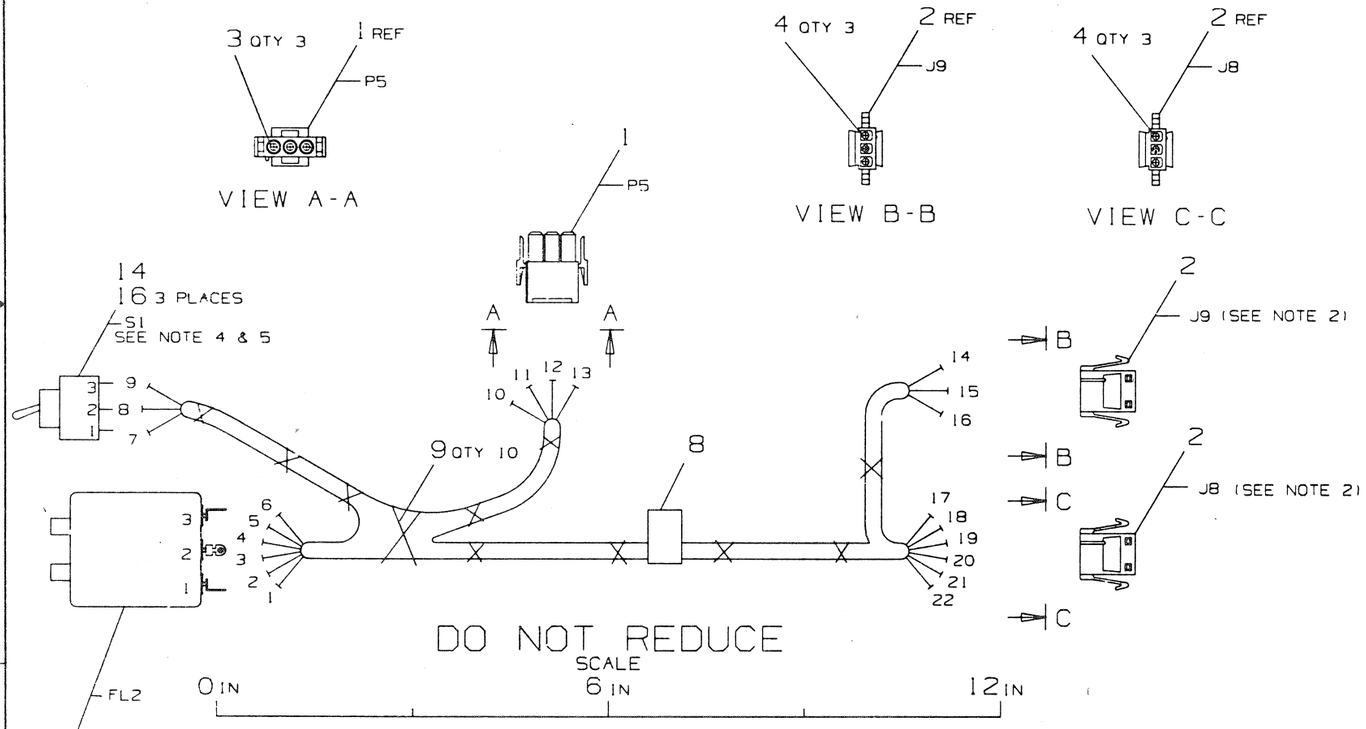

DO NOT REDUCE
SCALE

FOR MANUFACTURING PURPOSES ONLY.

LAYER #2 : FORMAT LAYER
LAYER #1 : WORK LAYER

PLOT AT: 1.00

CAUTION: OFF SHEET PARTS LIST
REFER TO K-PL-7020657-0-DBP
(Z6444)

REVISIONS			
CHK	CHANGE NO.	REV.	
EM	877-ML001	A	P.GAGNE 4/07/83
			A. BARON
WM	877-ML003	B	M.JOSEPH 31AUG83
			A. BARON

FIRST HIGHER ASS'Y: E-AD-7019938-0-DBU

QUANTITY & VARIATION

THIRD ANGLE PROJECTION

DO NOT SCALE DRAWING

REMOVE BURRS AND BREAK SHARP CORNERS

MATERIAL: SEE PARTS LIST

FINISH: NONE

DESCRIPTION	DRAWING NO.	PART NO.	ITEM NO.

UNLESS OTHERWISE SPECIFIED DIMENSIONS ARE IN INCHES AND THE FOLLOWING TOLERANCES APPLY (PER DEC STD 114)

INCHES TOLERANCES	ANGLES ±0°30'	APPLICABLE DIMENSION RANGE (CHECK ONE)	DIMENSION RANGE IN INCHES: OVER 0 TO 0.3	OVER 0.3 TO 1.2	OVER 1.2 TO 4.0	OVER 4.0 TO 12.0	OVER 12.0 TO 40.0	OVER 40.0 TO 80.0
.XX ± .1	SURFACE QUALITY	☐	±.02		±.03	±.05	±.10	
.XXX ± .032		☐	±.004	±.008	±.012	±.016	±.024	±.04
.XXXX ± .0016	MICROINCHES	☐						

DRN	KEN DAVAN	DATE	28JAN83
CHK'D	E. McCULLOUGH	DATE	10MAR83
DES. ENG.	AL BARON	DATE	10MAR83
RESP. ENG.	AL BARON	DATE	10MAR83
MFG. ENG.	R. KENNEDY	DATE	10MAR83
TOP DOC.	D-IA-7020657-0-DBU		

TITLE: HARNESS, CONTROL BOARD

digital

DOCUMENT NUMBER

SIZE	CODE	NUMBER	REV.
D	IA	7020657-0-DBU	B

SCALE 1/1 SHEET 1 OF 1

ML1

NHHAG3AUTOMATED BY PRTLST.4Q(50)

P A R T S L I S T

SHEET A1 0

LINE	ITEM	DOCUMENT NUMBER	PART NUMBER	DESCRIPTION	QUANTITY PER VARIATION 01
1	1	A-PS-1212167-0-0	1212167-00	MATE-N-LOK 03SKT(1X03).250CC HSG	1
2	2	A-PS-1209350-0-0	1209350-03	MATE-N-LOK 03SKT(1X03).200CC HSG	2
3	3	A-PS-1212170-0-0	1212170-03	MATE-N-LOK 01SKT 24-18AWG .0850D	3
4	4	A-PS-1209379-0-0	1209379-06	MATE-N-LOK 01SKT 24-18AWG .0820D	6
5	5		9107796-22	WIRE, 22AWG(07/30)IPVC 300V1	A/R
6	6		9107796-00	WIRE, 22AWG(07/30)IPVC 300V1	A/R
7	7		9107796-55	WIRE, 22AWG(07/30)IPVC 300V1	A/R
8	8		9009532-00	LABEL, CABLE IDENTIFICATION	1
9	9		9007031-00	TIE,CABLE BUNDL.DIA 0- 3/4"=101	A/R
10	10		9107796-33	WIRE, 22AWG(07/30)IPVC 300V1	A/R
11	11		7409872-02	PWR HARNESS DECAL, BLACK ON CLEA	1
12	12		7409873-02	PWR CONN DECAL BLACK ON CLEAR	1
13	13		1221099-01	FILTER,POWER BUS	1
14	14		1221067-01	SW,TOG 1PDT ON/OFF/ON 5A	1
15	15		9107305-02	TUBING,SHRINK .187ID EXP	A/R
16	16		9107714-00	TUBING,SHRINK .093ID EXP	A/R

REVISION HISTORY			BASIC PART NO: 7020657		
ENG	ECO NUMBER	REV	SECTION A OF A		
---	INITIAL	A	SECTION. VARIATION INDEX		
A.B	877-ML003	B	[A] 01		
			[B]		
			[C]		
			[D]		
			[E]		
			[F]		

DRN: KEN DAVAN	DATE: 02-FEB-83	D I G I T A L
CHK'D: E. MCCULLOUGH	DATE: 02-FEB-83	TITLE PARTS LIST HARNESS, CONTROL BOARD
DES.ENG.: AL BARON	DATE: 02-FEB-83	
RESP.ENG.: AL BARON	DATE: 02-FEB-83	DOCUMENT NUMBER
		SIZE: K CODE: PL NUMBER: 7020657-0-DBP REV: B
MFG.ENG.: R. KENNEDY	DATE: 29-APR-83	
ASSEMBLY NUMBER: E-AD-7019938-0-DBU	TOP DOCUMENT NUMBER: D-IA-7020657-0-DBU	FILE NAME: Z6444B.PLS EDIT #: 9

"THIS DRAWING AND SPECIFICATIONS HEREIN, ARE THE PROPERTY OF DIGITAL EQUIPMENT CORPORATION AND SHALL NOT BE REPRODUCED OR COPIED OR USED IN WHOLE OR IN PART AS THE BASIS FOR THE MANUFACTURE OR SALE OF ITEMS WITHOUT WRITTEN PERMISSION.
COPYRIGHT (C) 1983. DIGITAL EQUIPMENT CORPORATION "

CHK HH G3

THIS DRAWING AND SPECIFICATIONS, HEREIN, ARE THE PROPERTY OF DIGITAL EQUIPMENT CORPORATION AND SHALL NOT BE REPRODUCED OR COPIED OR USED IN WHOLE OR IN PART AS THE BASIS FOR THE MANUFACTURE OR SALE OF ITEMS WITHOUT WRITTEN PERMISSION.
COPYRIGHT © 1983 DIGITAL EQUIPMENT CORPORATION

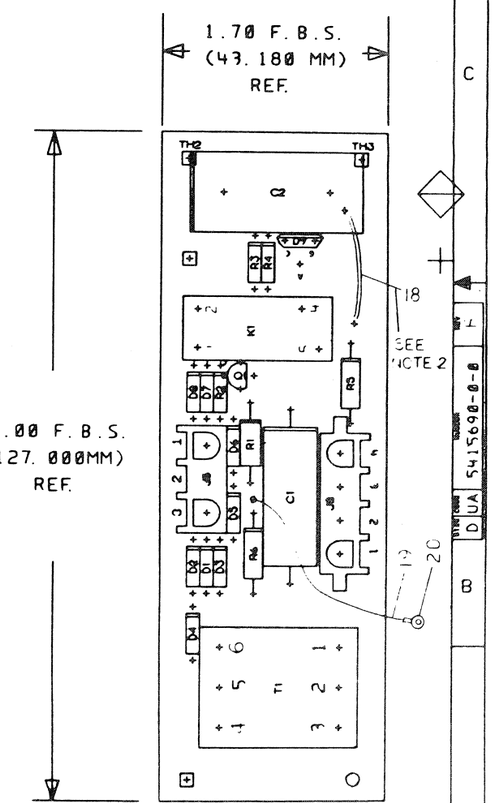

NOTES:

1. THIS BOARD MEETS REQUIREMENTS FOR U.L. TYPE HPWR.
2. ADD JUMPER TO FEEDTHRU TO RIGHT OF C2-2 AND TO FEEDTHRU ABOVE R5-1

STEP E	↑ Y AXIS _____	STEP ___ TIMES
REPEAT	→ X AXIS _____	STEP ___ TIMES

CHK	CHANGE NO	REV
	5415690-M1.001	B
S D	3/25/83	
AL BARON		
A. Baron	5/24/83	

ETCH REV. C1

SIGNATURES	DATE
DRN. JOE LIZOTTE	12-8-83
CHK D.	12-8-83
MECH. ENG.	12-8-83
PROJ. ENG.	12-8-83
PROD.	12-8-83

digital

TITLE
AC CONTROL BOARD

SCALE 2:1	SIZE	CODE	NUMBER	REV
SHT. 1 OF 1	D	UA	5415690-0-0	B

TOP DOC NUMBER: 0-DD-5415690-0-0

1 MS# 182048C

```
AUTOMATED BY  PRTLST.4Q(50)                              P A R T S   L I S T                                    SHEET A1  OF A1
                                                                                          QTY PER VARIATION
LINE ITEM  DOCUMENT NUMBER        PART NUMBER     DESCRIPTION                              00              REFERENCE DESIGNATOR


  1    1   D-MD-5015689-0-0       5015689-00      CIRCUIT DRILL AND ETCH                    1
  2    2                          1000080-00        50  MFD     50V +75-10%   AL EL         1              C1
  3    3                          1018866-01      .022  MFD   800V 20%     POLYPROP         1              C2
  4    4                          1105796-00      PIV= 400 IO= 1.00A 1N4004  DO-41          7              D1-D4,D6-D8
  5    5                          1212297-01      MATE-N-LOK 04PIN(1X04).250CC HDR          1              J8
  6    6                          1218087-00      RLY,G.P., 24V COIL,    ,10A               1              K1
  7    7                          1301969-00       22.0        .25 W 5.0 %       CF         1              R2
  8    8                          1621344-01      XFMR  P=120/240 S=38V,47-63HZ             1              T1
  9    9                          1300271-00      220.0        .25 W 5.0 %       CF         1              R3
 10   10                          1212297-03      MATE-N-LOK 03PIN(1X03).250CC HDR          1              J5
 11   11                          1110856-00      VZ= 24.0  5% 400 MW 1N970B                1              D5
 12   12                          1510705-00      XA   05   NPN 500MW SI 60 50 P            1              Q1
 13   13                          1518101-00      TRIAC PIV= 500 IO=  .80A                  1              D9
 14   14                          1321151-01        2.0  K  1.50 W 5.0 %       WW           1              R1
 15   15                          1300447-00        4.70 K   .25 W 5.0 %       CF           1              R4
 16   16                          1300228-00      100.0      .50 W 5.0 %       CF           1              R5
 17   17                          1316506-00      100.0  K   .50 W 5.0 %       CF           1              R6
 18   18   SEE NOTE               9107796-55      WIRE,     22AWG( 07/30)IPVC 300V1        A/R
 19   19                          9107400-54      WIRE,     22AWG( 07/30)IPVC 150V         A/R
 20   20                          9007930-00      TERM,RING      #10STUD CRIMP  16-2        1


 21 NOTE:   CUT ITEM 18 APPROX 1 1/2" LONG


!-----------------------------------------------------------------------------------------------------------------------------!
!    REVISION HISTORY          !BASIC PART NO: 5415690   !                              !                    !   ! D ! I ! G ! I ! T ! A ! L !
!------------------------------!-------------------------!DRN:        J. LIZOTTE        !DATE: 01-JAN-83     !   !   !   !   !   !   !   !   !
!ENG!    ECO NUMBER     !REV   !SECTION A  OF A          !------------------------------!--------------------!-------------------------------!
!---!-------------------!------!-------------------------!                              !                    !TITLE        PARTS LIST        !
!---! INITIAL           !A     !SECTION.VARIATION INDEX  !CHK'D:      D. BARRIERE       !DATE: 08-NOV-82     !                               !
!A.B!5415690-ML001      !B     !   [A] 00                !------------------------------!--------------------!  A.C. CONTROL BOARD           !
!   !                   !      !   [B]                   !                              !                    !                               !
!   !                   !      !   [C]                   !DES.ENG:    A. BARON          !DATE: 08-NOV-82     !                               !
!   !                   !      !   [D]                   !------------------------------!--------------------!-------------------------------!
!   !                   !      !   [E]                   !                              !                    !        DOCUMENT NUMBER        !
!   !                   !      !   [F]                   !RESP.ENG.: A. BARON           !DATE: 08-NOV-82     !-------------------------------!
!   !                   !      !   [H]                   !------------------------------!--------------------!SIZE!CODE! NUMBER         ! REV !
!   !                   !      !   [J]                   !                              !                    !    !    !                !     !
!   !                   !      !   [K]                   !MFG.ENG.:   B. KENNEDY        !DATE: 08-NOV-82     ! K  ! PL ! 5415690-0-DBP  ! B   !
!   !                   !      !   [L]                   !------------------------------!--------------------!----!----!----------------!-----!
!   !                   !      !   [M]                   !ASSEMBLY NUMBER:              !TOP DOCUMENT NUMBER:          ! FILE NAME:     !EDIT #!
!   !                   !      !   [N]                   !D-UA-5415690-0-0              !B-DD-5415690-0-0              ! Z5849B.PLS     !   4  !
!---!-------------------!------!-------------------------!------------------------------!------------------------------!----------------!------!
!        "THIS DRAWING AND SPECIFICATIONS HEREIN, ARE THE PROPERTY OF DIGITAL EQUIPMENT CORPORATION AND SHALL NOT BE REPRODUCED       !
!         OR COPIED OR USED IN WHOLE OR IN PART AS THE BASIS FOR THE MANUFACTURE OR SALE OF ITEMS WITHOUT WRITTEN PERMISSION.         !
!                               COPYRIGHT (C) 1983. DIGITAL EQUIPMENT CORPORATION "                                                   !
!-----------------------------------------------------------------------------------------------------------------------------!
```

"THIS DRAWING AND SPECIFICATIONS, HEREIN, ARE THE PROPERTY OF DIGITAL EQUIPMENT CORPORATION AND SHALL NOT BE REPRODUCED OR COPIED OR USED IN WHOLE OR IN PART AS THE BASIS FOR THE MANUFACTURE OR SALE OF ITEMS WITHOUT WRITTEN PERMISSION.
COPYRIGHT © 1982
DIGITAL EQUIPMENT CORPORATION"

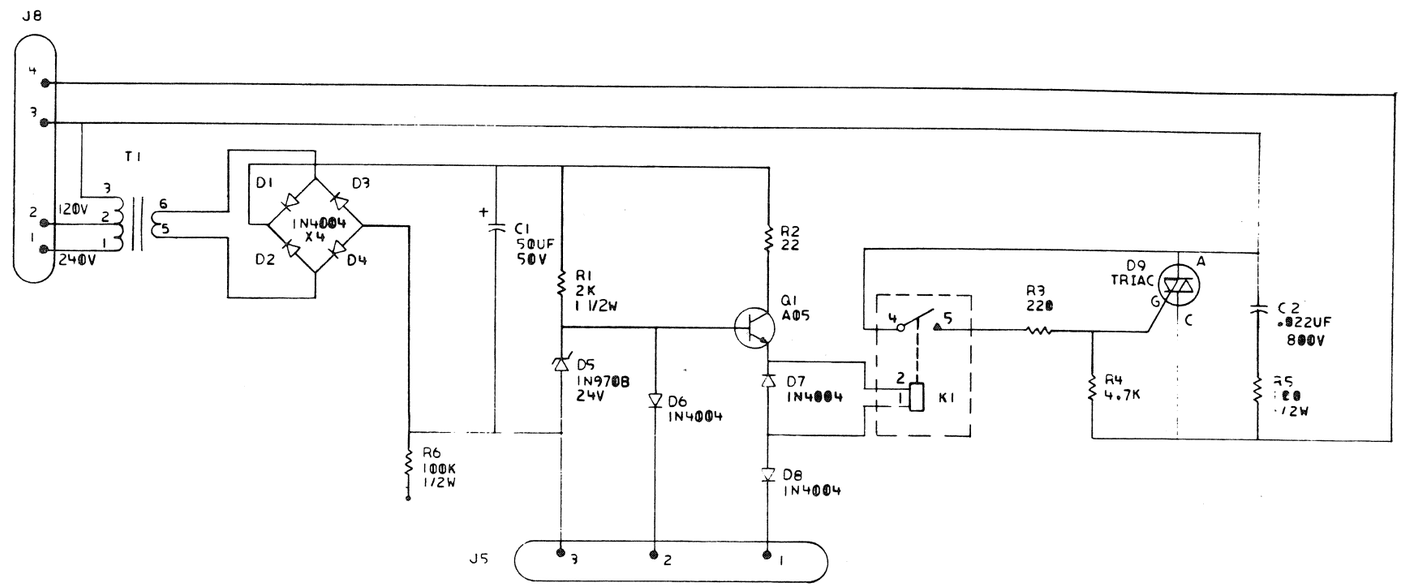

NOTE:

1. UNLESS NOTED ALL RESISTORS ARE 1/4W, 5%

REVISION HISTORY			
DATE	ECO NUMBER		REV
3/25/83	S. D'Angelo	ML001	B
	AL BARON		

877

DRN. S. D'Angelo	DATE 3 DEC 82	TITLE digital
CHK'D. A. Baron	DATE 3 DEC 82	A.C. CONTROL BOARD
DES. ENG. A. Baron	DATE 3-1-83	
PROJ. ENGR. A. Baron	DATE 3-1-83	DOCUMENT NUMBER
MFG. ENGR. B.A. Lind B.L.	DATE 4-15-83	SIZE D CODE CS NUMBER 5415690-0-1 REV. B
NEXT HIGHER DOC. B-DD-5415690-0-0		SCALE — SHEET 1 OF 1

SIZE D CODE CS NUMBER 5415690-0-1 REV B

DIGITAL EQUIPMENT CORPORATION

MAYNARD, MASSACHUSETTS

ENGINEERING SPECIFICATION DATE: 13 JANUARY 1983

TITLE: POWER CONTROLLER SPECIFICATION - 877

REVISIONS

REV	DESCRIPTION	CHG NO	ORIG	DATE	APPD BY	DATE
A	INIT RELEASE		Alfred Baron	1/25/83		
B	Doc. Change	877-ML002		5/26/83	Alfred Baron	5-26-83

This document contains confidential and proprietary information to Digital. This information shall not be disclosed to persons outside the employ of DEC, except by DEC personnel so authorized by DEC, and only for use by such other persons in the design, production or manufacture of products for DEC.
Copyright (C) 1983 Digital Equipment Corporation.

ENG.	APPD	SIZE	CODE	NUMBER	REV
A. BARON	A.BARON	A	SP	877-0-2	B
A. Baron	A. Baron				

TABLE OF CONTENTS

1.0 GENERAL DESCRIPTION
2.0 APPLICABLE DOCUMENTS
3.0 ELECTRICAL DESCRIPTION
4.0 INPUT OVERVOLTAGE SURGE RATING & CIRCUIT BREAKER RATING
5.0 POWER CONTROL BUS
7.0 RIDE THROUGH CAPABILITY
8.0 MECHANICAL AND ENVIRONMENTAL SPEC
9.0 PRODUCT SAFETY
10.0 RELIABILITY

1.0 GENERAL DESCRIPTION

1.1 MECHANICAL

The 877 power controller consists of five variations: 877-A,B,C,D and E. All have two switched duplex outlets and one unswitched duplex (total of 6 outlets). All variations include an ac line filter. The 877's application is to distribute and control ac power in cabinets. All variations include a line cord and a suitable connector.

2.0 APPLICABLE DOCUMENTS

DEC STD.	002	AC Power Wiring, Grounding, Receptacles Rev. C
DEC STD.	102	Environmental Standard Rev. D
DEC STD.	122	AC Power Line Standard Rev. D
DEC STD.	123	Power Control Bus Standard Rev. A
DEC STD.	119	Product Safety Standard Rev. D

3.0 ELECTRICAL

The power controller serves four functions:

a) To control large amounts of power with low signal power.

b) To provide a convenient ac power distribution point.

c) To disconnect power for servicing and in case of overload.

A block diagram of the basic power controller is shown in Figure

There are five (5) configurations of the power controller listed, all are single phase (see table I).

ELECTRICAL SPECIFICATIONS All values are rms unless otherwise specified.

TABLE I

877 TYPE	RATED INPUT VOLT.	INPUT RANGE	RATED CURRENT	INRUSH (PEAK I)	INPUT VA FULL LOAD	CIRCUIT BREAKER RATING	POWER CORD AWG	NEMA PLUG	OUTPUT NEMA RECPT.
A	120	90-132	12A	300A	1440	15-15A	#12	5-15P	5-20R
B	240	180-264	12A	300A	2880	15-15A	#12	6-15P	6-20R
C	120	90-132	16A	400A	1920	20-20A	#12	5-20P	5-20R
D	120	90-132	24A	500A	2880	20-20-30A	#10	L5-30P	5-20R
E	240	180-264	24A	500A	5760	20-20-30A	#10	L6-30P	6-20R

GENERAL SPECIFICATIONS - All versions
Input and output connections are single phase 2 wire plus ground
Frequency range is 47 Hertz to 63 Hertz
Input power at no load - 10 Watts maximum
Line Filter - See A-PS-12-13070-0-0
Leakage current contribution of the Power Controller - 1.5mA max @ 250 V 60 Hz
Output Voltage - Same as input less voltage drop through unit not to exceed 2 volts

4.0 INPUT OVERVOLTAGE SURGE FOR THE POWER CONTROLLER ALONE

VERSION	PHASE TO NEUTRAL
877-A,C,D	150V, 1 SECOND
877-B,E	300V, [illegible] OND

CIRCUIT BREAKER TRIP CHARACTERISTICS

VERSIONS	DEC PART NUMBER	DELAY CURVE
877-A,B	1212124-0-8	FIG. II
877-C	1212124-0-7	FIG. II
877-D,E	1211196-0-4	FIG. III

5.0 POWER CONTROL BUS

The power control bus consists of two parallel connected three pin Mate-N-Lok connectors going to the control board. Each of these connectors feeds two three pin Mate-N-Lok connectors mounted on the power controller. The pin connections are as follows:

Pin 1 Power Request
Pin 2 Power Inhibit
Pin 3 Return

The two Mate-N-Lok connectors on the front panel are part of a power bus filter designed to reduce noise appearing at the front panel power bus Mate-N-Lok connectors.

Input signal current levels:

High $\leq$ 20 uA*
Low $\geq$ 20 mA*

* For worst case line voltage.

Input signal voltage levels:

High $\leq$ 35V at 132V line voltage
Low $\leq$ 1.6V

6.0 LOADS

No loads external to the cabinet are to be plugged into the power controller.

7.0 RIDE THROUGH CAPABILITY

Less than 1 millisecond.

8.0 MECHANICAL AND ENVIRONMENTAL

8.1 DIMENSIONS

6 9/16 (16.7cm) x 11 1/16 (28.1cm) x 5 5/16 (12.5cm)

8.2 WEIGHT

15 lbs. (6.8kg) max.

8.3 APPLICATION

To be used only in H9640 cabinet series with H9544-S series bulkhead panels in which the outlet receptacles will not be operator accessible.

8.4 TEMPERATURE

Per DEC STD.102 Rev. C DEC Class B (10°C To 40°C) OPERATING
(-40°C To 65°C) STORAGE

8.5 RELATIVE HUMIDITY

Per DEC STD.102 Rev. C DEC Class B

8.6 VIBRATION

Per DEC STD.102 REV. C DEC Class C.

8.7 SHOCK

Per DEC STD.102 Paragraph 2.0

8.8 ALTITUDE

Per DEC STD.102 Paragraph 3.0

8.9 COOLING

Convection cooled.

9.0 PRODUCT SAFETY

The 877 power controller shall conform to DEC STD.119 (Product Safety).

10.0 PRODUCT RELIABILITY

The MCBF of the 877 power controller shall be 2500. Based on one ON/OFF cycle per day (24 hours/cycle), this relates to an MTBF of 60,000 hours.

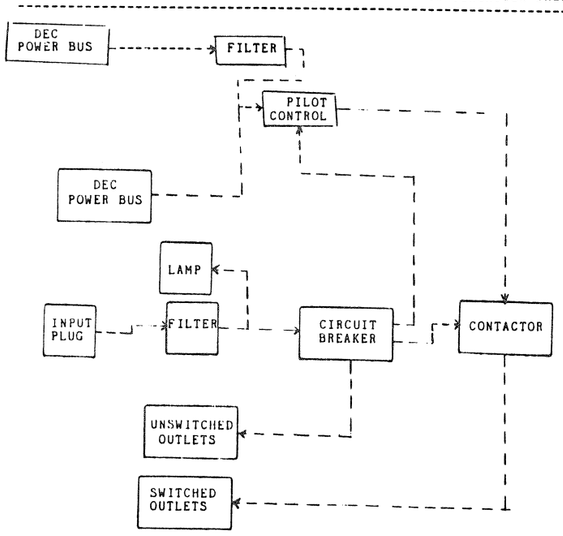

FIGURE I

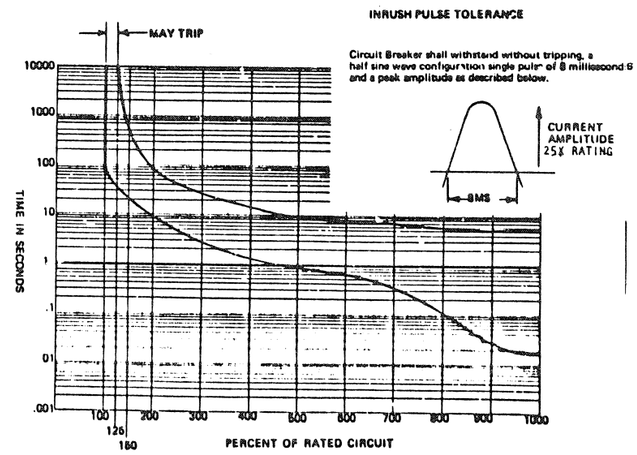

TIME-DELAY CURVE

FIG. II

INRUSH PULSE TOLERANCE

Circuit Breaker shall withstand without tripping, a half sine wave configuration single pulse of 10 milliseconds and a peak amplitude as described below.

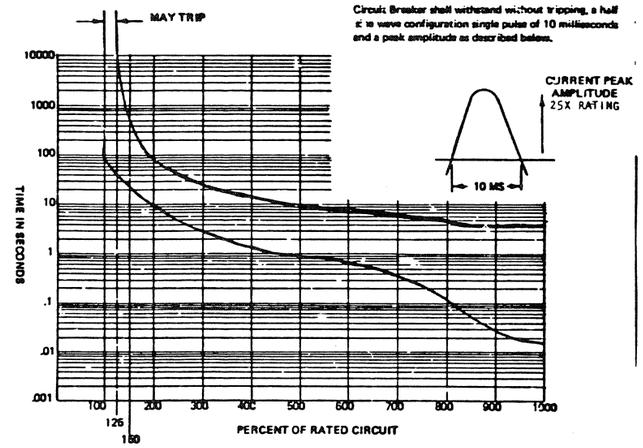

FIGURE III

TIME-DELAY CURVE