digital EQUIPMENT CORPORATION
MAYNARD, MASSACHUSETTS

DRAWING DIRECTORY

CUSTOMER PRINT SET INDEX

SEQUENCE		
DRAWING DIRECTORY	B-DD-KB11-Ø	(SHEET ONE ONLY)
MODULE UTILIZATION	E-MU-KB11-A-1	
BLOCK DIAGRAM	D-BD-KB11-A-Ø2	
KB11-A FLOW DIAGRAMS	D-FD-KB11-A-Ø3	
DATA PATHS (DAP)	E-CS-M81ØØ-Ø-1	
GENERAL REGS & ALU CNTL(GRA)	E-CS-M81Ø1-Ø-1	
IR DECODE & COND CODES(IRC)	E-CS-M81Ø2-Ø-1	
PROC DATA & UNIBUS REG(PDR)	E-CS-M81Ø4-Ø-1	
ROM & ROM CONTROL(RAC)	E-CS-M81Ø3-Ø-1	
SYSTEM JUMPER BOARD(SJB)	E-CS-M8116-Ø-1	
TIMING GENERATOR(TIG)	E-CS-M81Ø9-Ø-1	
TRAP & MISC CNTL(TMC)	E-CS-M81Ø5-Ø-1	
UNIBUS & CONSOLE CNTL (UBC)	E-CS-M81Ø6-Ø-1	
BUS CABLES & GRANT CHAIN	D-IC-KB11-A-BG	
CIRCUIT SCHEMATIC	C-CS-M93Ø-Ø-1	
CIRCUIT SCHEMATIC	C-CS-M92Ø-Ø-1	
CIRCUIT SCHEMATIC	E-CS-5409910-0-1	
CIRCUIT SCHEMATIC	E-CS-5409912-0-1	
CIRCUIT SCHEMATIC(TIG)	**E-CS-M81Ø9-0-1**	
SPECIAL REVISION		

THIS IS PRINT SET

UNIT VARIATIONS

VARIATION	TITLE	PRINT SET TYPE: KB11-1
KB11-A	16 BIT PROCESSOR	X

REVISIONS		
DATE	CHG. NO.	REV
5/72	7008871-00002	A
	7008871-00003	B
	KBIIA-6	C
	KBIIA-7	D
	KBIIA-8	E
	KBIIA-9	F
	KBIIA-11	H
	KBIIA-12A	J
	KBIIA-13	K
1/73	KBIIA-14	L
3/73	KBIIA-15	M
5/73	KBIIA-16	N
5/73	KBIIA-17	P
8/73	KBIIA-18	R
12/73	KBIIA-19	S
3-74	KBIIA-20	T
6-74	KBIIA-21	U

USED ON OPTION/MODEL
11/45

DRN. R. COOK	DATE 3/30/72	TITLE 16 BIT PROCESSOR	
CHK'D. R.COOK	DATE 3/30/72		
PROJ ENG.	DATE 4/28/72		
PROD.	DATE 5-1-72	SIZE B	CODE DD
FIELD SERV.	DATE 5/1/72	NUMBER KB11-Ø	REV
SHEET 1 OF 5		DIST	

DRB 106

This drawing and specifications, herein, are the property of Digital Equipment Corporation and shall not be reproduced or copied or used in whole or in part as the basis for the manufacture or sale of items without written permission.

	1	2	3	4	5	6	7	8	9	10	11	12	13	14	15	16	17	18	19	20	21	22	23	24	25	26	27	28
	M930	M8114	M8115	M8112	M8113	M8100	M8101	M8102	M8103	M8104	M8105	M8106		M8116		M8110					M8110							
		FRA	FRL	FRM	FXP	DAP	GRA	IRC	RAC	PDR	TMC	UBC		SUB		MEM CNTRL					MEM CNTRL							
A																	G401 G401 YA M8111 M8111 YA					G401 G401 YA M8111 M8111 YA				NOTE 3		
B													NOTE 5 *	NOTE 5 *														
		*	*	*	*										M8109 TIG													
C	SPACE RESERVED FOR KW11 L OPTION	SPACE RESERVED FOR FP11 OPTION (SLOTS 2 THRU 5)														*	*	*	*	*	*	*	*	*	*	*	*	*
																SPACE RESERVED FOR SEMICONDUCTOR MEMORY OPTIONS (SLOTS 16 THRU 25)												
D																										SPACE RESERVED FOR SMALL PERIPHERAL CONTROLLERS		
E	SPACE RESERVED FOR FPP MAINT CARD																											
F	SPACE RESERVED FOR CP MAINT CARD																											

* DESIGNATES OPTION

NOTES:

1. POWER TO MOS AND BIPOLAR MEMORY REMAINS ON WITH THE CONSOLE ON/OFF SWITCH IN THE OFF POSITION. THIS IS INDICATED BY THE LED ON THE MOS CONTROL BOARD. ~~IF THERE IS NO MEMORY MANAGEMENT (M8107 AND M8108) INSTALLED, THE SYSTEM JUMPER BOARD (M8116) MUST BE INSTALLED IN SLOT #14.~~
2. CAUTION MUST BE OBSERVED WHEN INSTALLING THE BOARDS INTO THE BACKPANEL SLOTS BECAUSE OF NON-STANDARD VOLTAGES PRESENT IN SLOTS Ø1, Ø2 AND 15 THRU 28.
3. IF ONLY ONE UNIBUS IS USED:
   A. THE UNIBUS PLUGS IN SLOT #28.
   B. PLUG AN INTERNAL BUS CONNECTOR JUMPER (M92ØØ) INTO SLOTS #26 AND #27.
   C. PLUG A BUS TERMINATOR (M93Ø) INTO SLOT #1.

   IF TWO UNIBUSES ARE USED:
   A. UNIBUS A PLUGS IN SLOT #26
   B. TERMINATOR (M93Ø) FOR UNIBUS A PLUGS INTO SLOT #1
   C. UNIBUS B PLUGS IN SLOT #27.
   D. TERMINATOR (M93Ø) FOR UNIBUS B PLUGS INTO SLOT #28.
4. MODULES IN SLOTS 17-20 MUST BE SAME TYPE; MODULES IN SLOTS 22-25 MUST BE SAME TYPE.
5. IF KT11 OPTION IS PRESENT M8108 GOES IN SLOT 13 & M8107 GOES IN SLOT 14, IF NO KT11 M8116 GOES IN SLOT 14 & SLOT 13 IS EMPTY.

QTY.	DESCRIPTION	PART NO.	ITEM NO.
*	SYSTEM MAINT TOOLS	B-DD-SP45-KA	
*	FLOATING POINT PROC.	B-DD-FP11-B	
*	64 WORD BOOTSTRAP	B-DD-MR11-D	
*	INTERVAL CLOCK	A-ML-KW11-D	
*	BIPOLAR MEMORY	B-DD-MS11-C	
*	MOS MEMORY	B-DD-MS11-B	
*	MEM. MANAGEMENT UNIT	B-DD-KT11-C	
1	INT. BUS CONN ASSY	M9200	
2	BUS TERMINATOR	M93Ø	
1	SYSTEM JUMPER BD	M8116	
1	TIMING GENERATOR	M8109	
1	UNIBUS & CONSOLE CNTL	M8106	
1	TRAP & MISC. CONTROL	M8105	
1	PROC. DATA & UNIBUS REG	M8104	
1	ROM & ROM CONTROL	M8103	
1	IR DECOD & COND. CODES	M8102	
1	GENERAL REGS & ALU CNTL	M8101	
1	DATA PATHS	M8100	

PARTS LIST

FIRST USED ON OPTION/MODEL	
11145	

UNLESS OTHERWISE SPECIFIED DIMENSION IN INCHES. TOLERANCES
DECIMALS: .XXX = .005, .XX = .02, .X = .1
ANGLES: ±0° 30'
REMOVE BURRS AND BREAK SHARP CORNERS SURFACE QUALITY ✓
MATERIAL
FINISH

REVISIONS: REV. A — CHANGE NO. — CHK. — KBIIA. OVDOT — 7/8/72 — JOHNSON

DRN. — DATE 9-5-72
CHK. — DATE 9/12/72
ENG. — DATE 9/14/72
PROJ. ENG. — DATE 9/14/72
PROD. — DATE 9-15-72
NEXT HIGHER ASSY. B-DD-KB11-Ø
SCALE
SHEET 1 OF 1

digital EQUIPMENT CORPORATION MAYNARD, MASSACHUSETTS

TITLE: MODULE UTILIZATION

SIZE	CODE	NUMBER	REV.
E	MU	KB11-A-Ø1	A

DIST.

DEC FORM NO. DNE 180

This drawing and specifications, herein, are the property of Digital Equipment Corporation and shall not be reproduced or copied or used in whole or in part as the basis for the manufacture or sale of items without written permission.

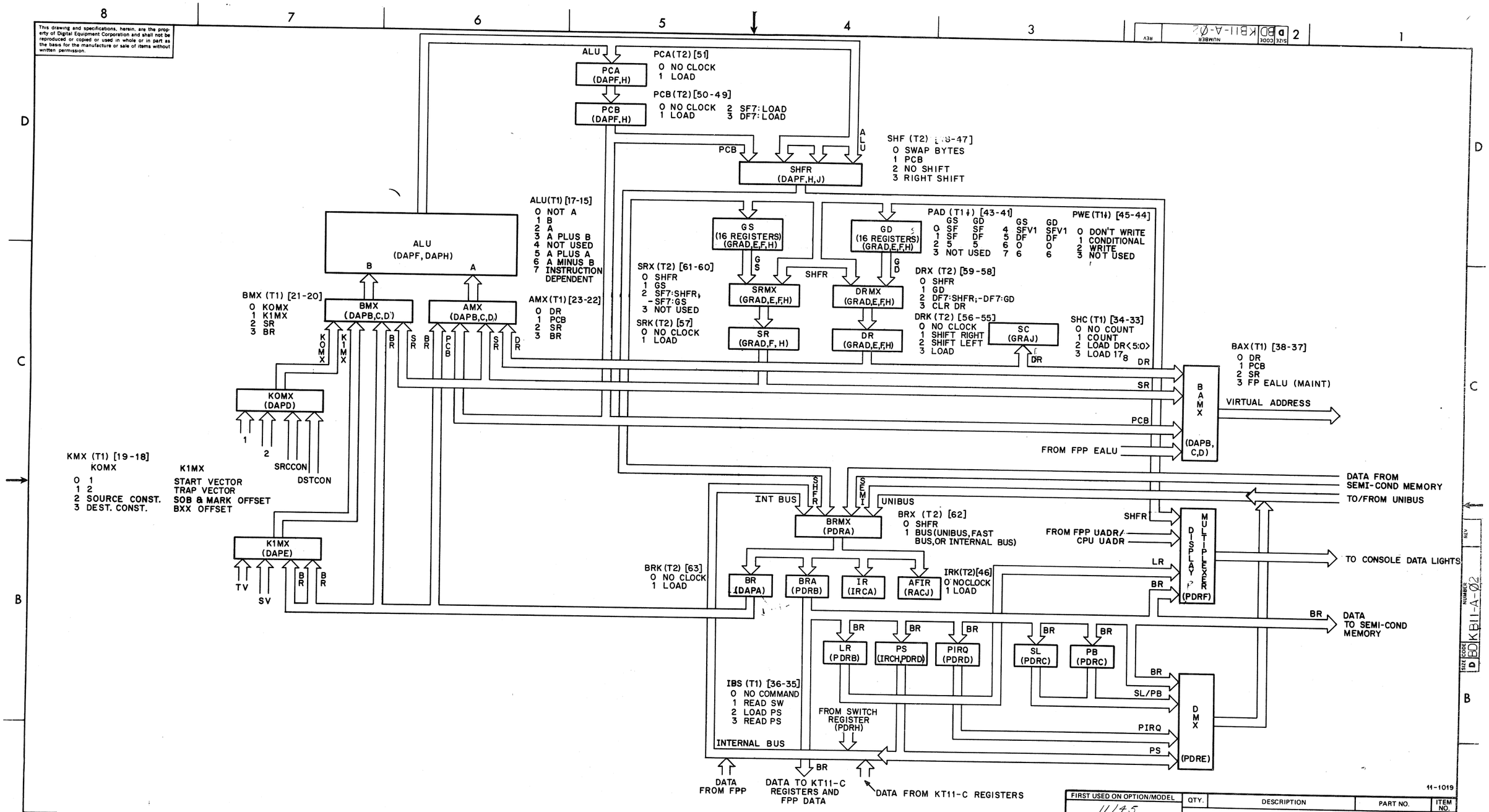

11-1019

FIRST USED ON OPTION/MODEL	QTY.	DESCRIPTION	PART NO.	ITEM NO.
11/45		PARTS LIST		

UNLESS OTHERWISE SPECIFIED DIMENSION IN INCHES. TOLERANCES

DECIMALS	ANGLES
.XXX = .005	±0° 30'
.XX = .02	
.X = .1	

REMOVE BURRS AND BREAK SHARP CORNERS SURFACE QUALITY ✓

MATERIAL

FINISH

		DATE
DRN.	[illegible]	4-6-72
CHK'D.	[illegible]	4/14/72
ENG.	[illegible]	4/14/72
PROJ. ENG.	[illegible]	4/17/72
PROD.		

digital EQUIPMENT CORPORATION MAYNARD MASSACHUSETTS

TITLE

BLOCK DIAGRAM

NEXT HIGHER ASSY. B-DD-KB11-Ø

SCALE

SHEET 1 OF 2

SIZE	CODE	NUMBER	REV.
D	BD	KB11-A-Ø2	

DIST.

REVISIONS

CHANGE NO	CHK	REV

BRUNING 40-522 15940

DEC FORM NO DRD 102-B

This drawing and specifications, herein, are the property of Digital Equipment Corporation and shall not be reproduced or copied or used in whole or in part as the basis for the manufacture or sale of items without written permission.

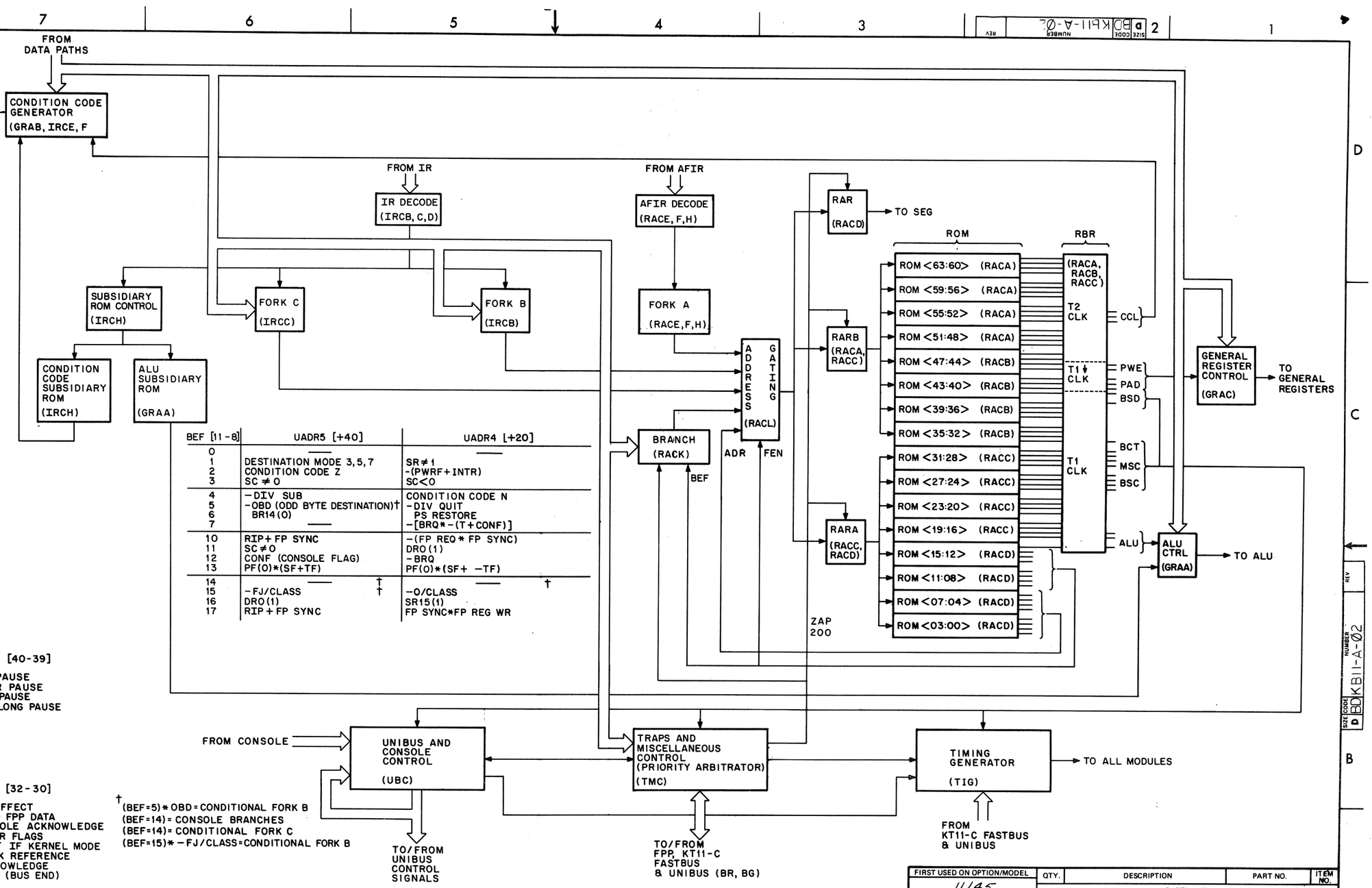

CCL (T2) [54-52]

0 NO CHANGE
1 INSTRUCTION DEPENDENT
2 SET/CLR FROM IR (CCOP)
3 LOAD FROM FPP IF ENABLED
4 CCLD4
5 CCLD5
6 CCLD6
7 CCLD7

FEN [14-12]

FEN 14 ENABLE FORK C
FEN 13 ENABLE FORK B
FEN 12 ENABLE FORK A

ADR [07-00]

TO ADDRESS GATING

BEF [11-8]	UADR5 [+40]	UADR4 [+20]
0	—	—
1	DESTINATION MODE 3,5,7	SR≠1
2	CONDITION CODE Z	-(PWRF+INTR)
3	SC≠0	SC<0
4	-DIV SUB	CONDITION CODE N
5	-OBD (ODD BYTE DESTINATION)†	-DIV QUIT
6	BR14(0)	PS RESTORE
7	—	-[BRQ*-(T+CONF)]
10	RIP+FP SYNC	-(FP REQ*FP SYNC)
11	SC≠0	DRO(1)
12	CONF (CONSOLE FLAG)	-BRQ
13	PF(0)*(SF+TF)	PF(0)*(SF+ -TF)
14	—	—
15	-FJ/CLASS †	-O/CLASS †
16	DRO(1)	SR15(1)
17	RIP+FP SYNC	FP SYNC*FP REG WR

MSC (T1) [29-27]

0 NO AFFECT
1 ENA FP ATTN
2 NOT USED
3 SET CONF IF KERNEL MODE
4 SPL (SET PRIORITY LEVEL)
5 CONDITIONAL BUST
6 BRQ STROBE
7 BUST (BUS START)

BSD (T1) [40-39]

0 NO PAUSE
1 INTR PAUSE
2 BUS PAUSE
3 BUS LONG PAUSE

BSC (T1) [26-24]

0 DATI
1 SRC1 DATI
2 KERNEL DATI
3 SRC2 DATI
4 FC (CONTROLLED BY FPP)
5 DATO
6 BSOP1
7 BSOP2

BCT (T1) [32-30]

0 NO AFFECT
1 READ FPP DATA
2 CONSOLE ACKNOWLEDGE
3 CLEAR FLAGS
4 INIT IF KERNEL MODE
5 STACK REFERENCE
6 ACKNOWLEDGE
7 BEND (BUS END)

†(BEF=5)*OBD=CONDITIONAL FORK B
(BEF=14)=CONSOLE BRANCHES
(BEF=14)=CONDITIONAL FORK C
(BEF=15)*-FJ/CLASS=CONDITIONAL FORK B

FIRST USED ON OPTION/MODEL	QTY.	DESCRIPTION	PART NO.	ITEM NO.
11/45		PARTS LIST		

UNLESS OTHERWISE SPECIFIED DIMENSION IN INCHES. TOLERANCES

DECIMALS	ANGLES
.XXX = .005	±0° 30'
.XX = .02	
.X = .1	

REMOVE BURRS AND BREAK SHARP CORNERS SURFACE QUALITY ✓

MATERIAL

FINISH

DRN.		DATE 4-6-72
CHK'D.		DATE 4/14/72
ENG.		DATE 4/14/72
PROJ. ENG.		DATE 4/14/72
PROD.		DATE 4-6-72

NEXT HIGHER ASSY. B-DD-KB11-Ø

SCALE

SHEET 2 OF 2

digital EQUIPMENT CORPORATION MAYNARD MASSACHUSETTS

TITLE BLOCK DIAGRAM

SIZE	CODE	NUMBER	REV.
D	BD	KB11-A-Ø2	

DIST.

REVISIONS | CHANGE NO. | CHK | REV

BRUNING 40-522 15840

DEC FORM NO DRD 102-B

This drawing and specifications, herein, are the property of Digital Equipment Corporation and shall not be reproduced or copied or used in whole or in part as the basis for the manufacture or sale of items without written permission.

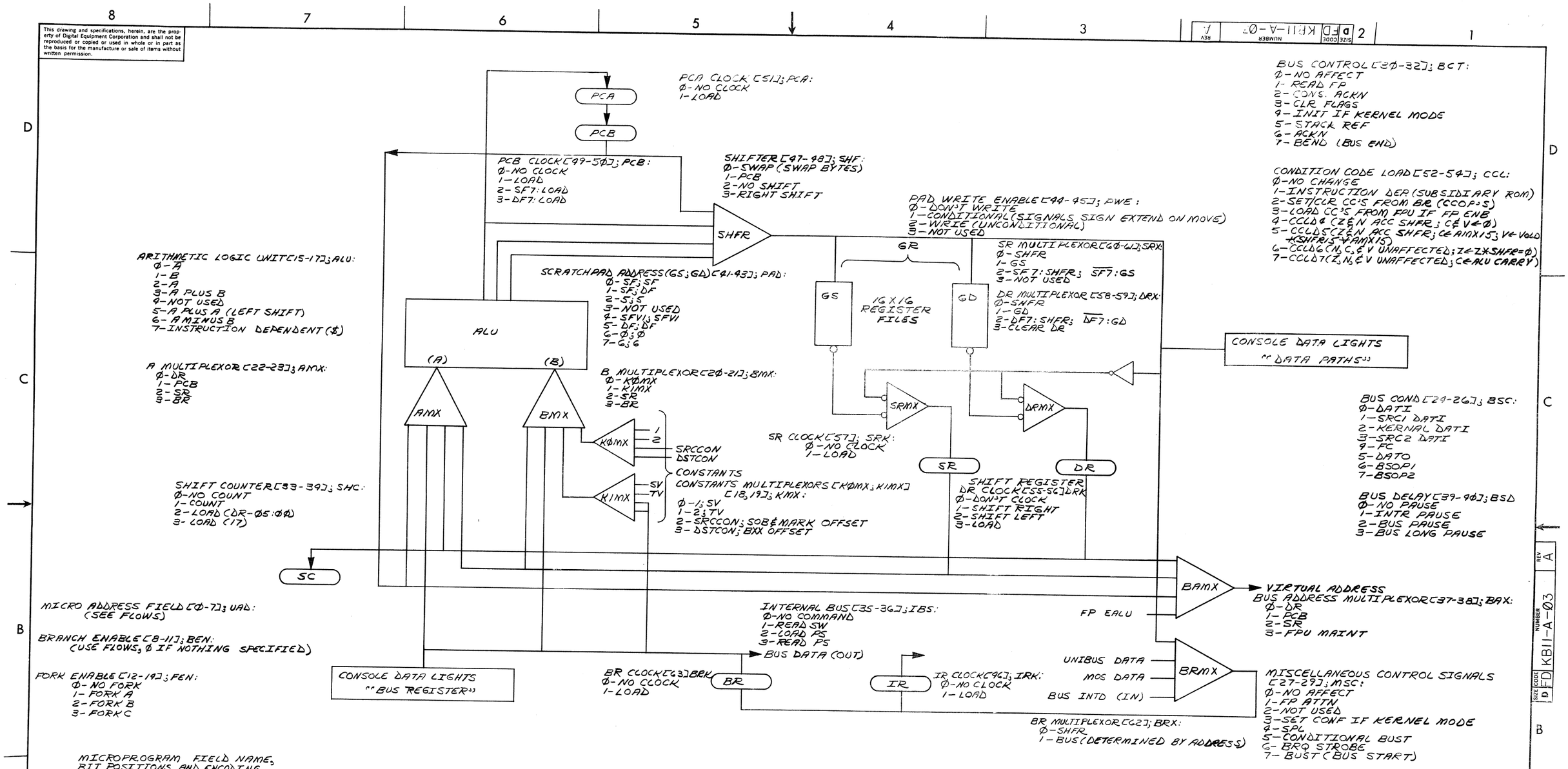

REVISIONS			
CHK	CHANGE NO	REV	
	KBII-CC014	A	S JENKINS 3-1-72

FIRST USED ON OPTION/MODEL	QTY.	DESCRIPTION	PART NO.	ITEM NO.
11/45		PARTS LIST		

UNLESS OTHERWISE SPECIFIED DIMENSION IN INCHES. TOLERANCES

DECIMALS	ANGLES
.XXX = .005 .XX = .02 .X = .1	±0° 30'

REMOVE BURRS AND BREAK SHARP CORNERS SURFACE QUALITY ✓

MATERIAL

FINISH

DRN.	DATE 10/18/71	digital EQUIPMENT CORPORATION MAYNARD, MASSACHUSETTS
CHK'D.	DATE	
ENG.	DATE 4-3-72	TITLE KBII-A FLOW DIAGRAMS
PROJ. ENG.	DATE 4-72	
PROD.	DATE 4-13-72	
NEXT HIGHER ASSY. B-DD-KBII-Ø		SIZE D CODE FD NUMBER KBII-A-Ø3 REV. A
SCALE		
SHEET 1 OF 1		DIST.

DATA PATHS

DEC FORM NO DRD 102-B

This drawing and specifications, herein, are the property of Digital Equipment Corporation and shall not be reproduced or copied or used in whole or in part as the basis for the manufacture or sale of items without written permission.

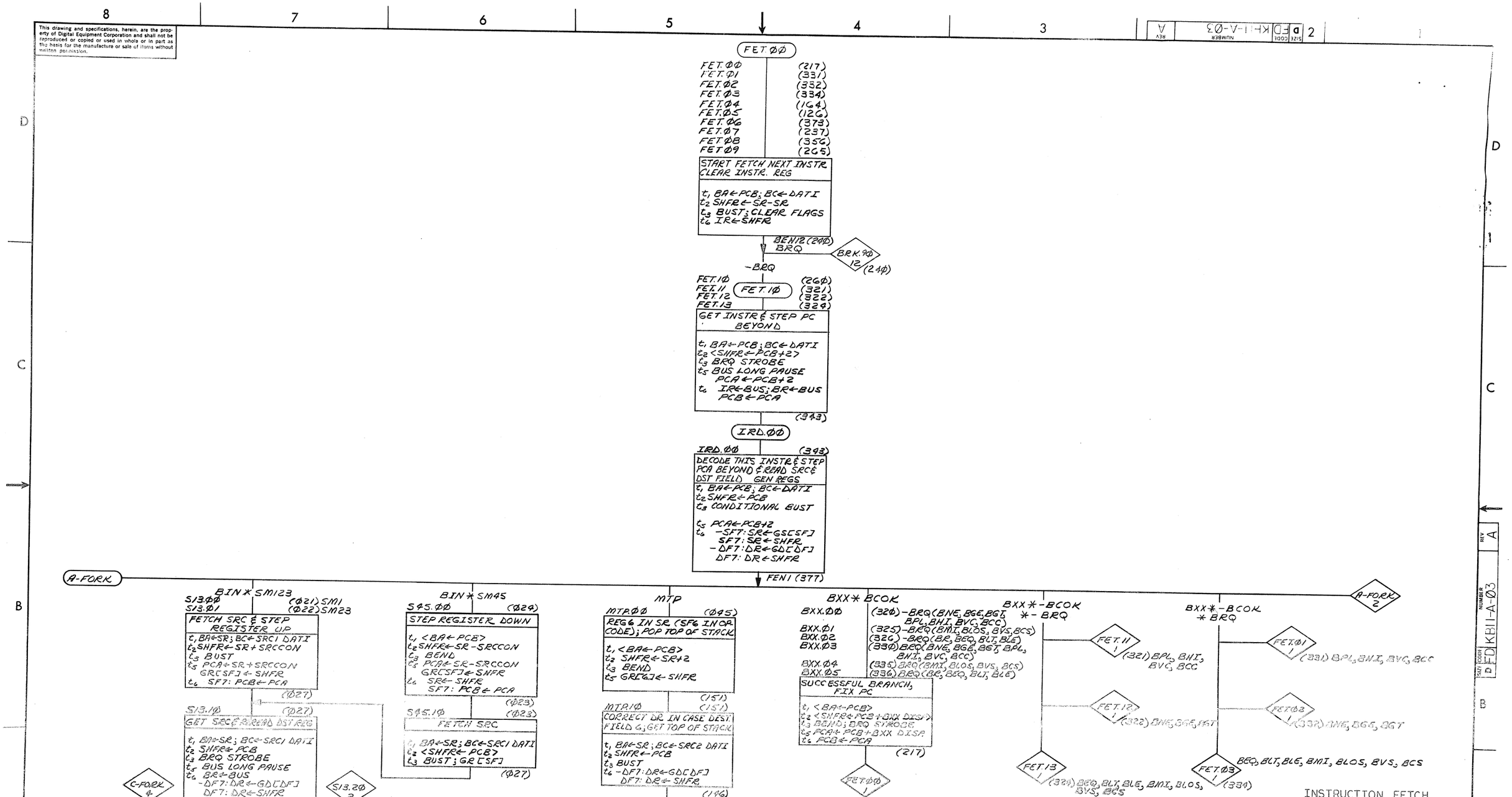

INSTRUCTION FETCH

FIRST USED ON OPTION/MODEL	QTY.	DESCRIPTION	PART NO.	ITEM NO.
11/45		PARTS LIST		

UNLESS OTHERWISE SPECIFIED DIMENSION IN INCHES. TOLERANCES
DECIMALS .XXX = .005, .XX = .02, .X = .1; ANGLES ±0° 30'
REMOVE BURRS AND BREAK SHARP CORNERS SURFACE QUALITY ✓
MATERIAL
FINISH

DRN. [illegible] DATE 1-5-71
CHK'D. DATE
ENG. DATE
PROJ. ENG. DATE
PROD. DATE

digital EQUIPMENT CORPORATION MAYNARD MASSACHUSETTS

TITLE KB11-A FLOW DIAGRAMS (FLOWS 1)

NEXT HIGHER ASSY. P-DD-KB11 Ø
SCALE
SHEET 2 OF 15

SIZE	CODE	NUMBER	REV
D	FD	KB11-A-Ø3	A

DIST.

REVISIONS: REV | CHANGE NO | CHK

DEC FORM NO. DRD 102-B

This drawing and specifications, herein, are the property of Digital Equipment Corporation and shall not be reproduced or copied or used in whole or in part as the basis for the manufacture or sale of items without written permission.

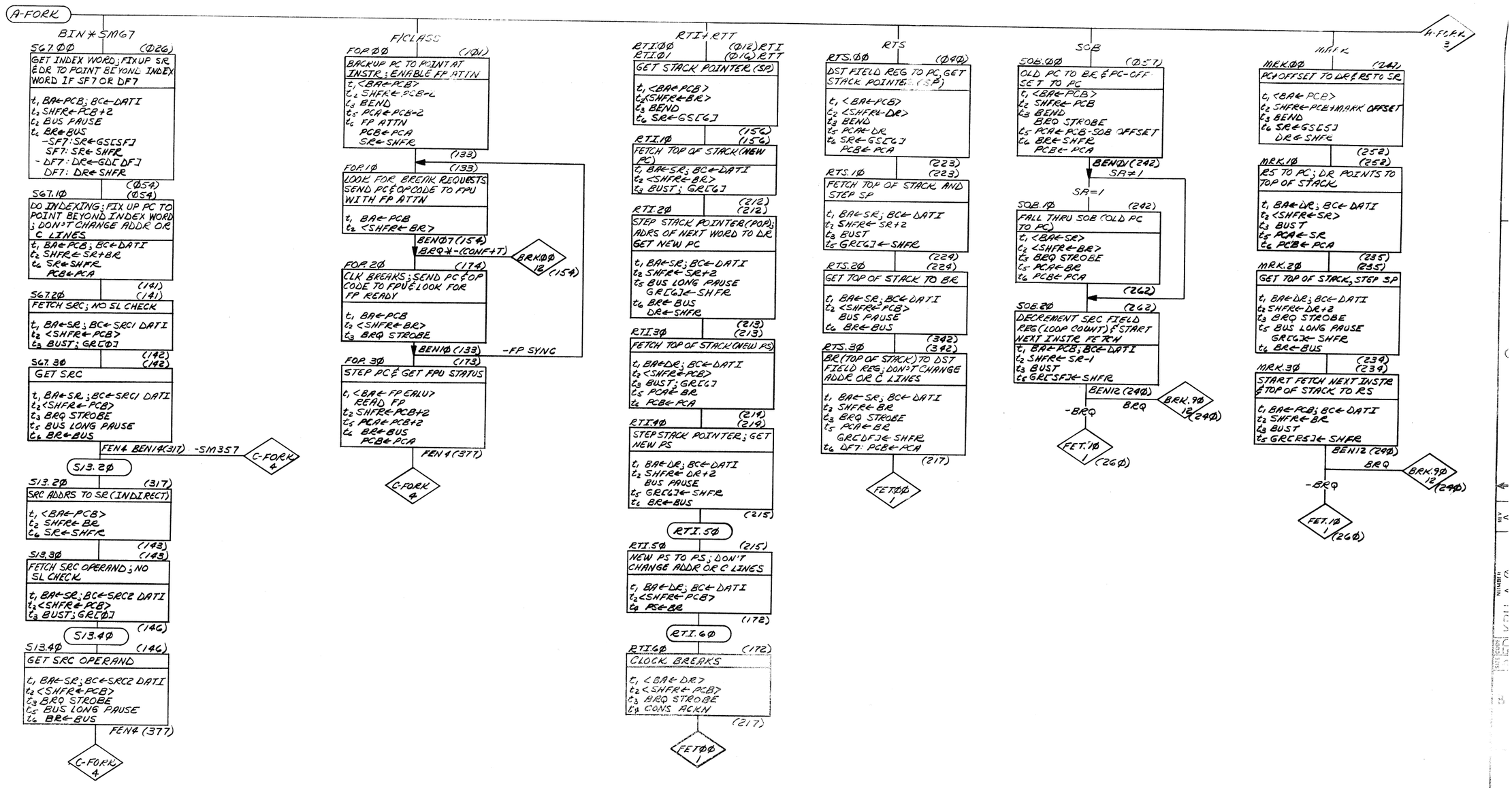

CONTROL; FLOATING; INDEXED SOURCE

FIRST USED ON OPTION/MODEL	QTY.	DESCRIPTION	PART NO.	ITEM NO.
11/45		PARTS LIST		

UNLESS OTHERWISE SPECIFIED DIMENSION IN INCHES. TOLERANCES

DECIMALS	ANGLES
.XXX = .005	±0° 30'
.XX = .02	
.X = .1	

REMOVE BURRS AND BREAK SHARP CORNERS SURFACE QUALITY ✓

MATERIAL

FINISH

DRN. Akibert	DATE 3-13-72	digital EQUIPMENT CORPORATION MAYNARD MASSACHUSETTS
CHK'D.	DATE	
ENG.	DATE 4-3-72	TITLE KB11-A FLOW DIAGRAMS (FLOW 2)
PROJ. ENG.	DATE 4-3-72	
PROD.	DATE 4-13-72	

NEXT HIGHER ASSY. B-DD-KB11-Ø

SCALE

SHEET 3 OF 15

SIZE	CODE	NUMBER	REV.
D	FD	KB11-A-03	A

DIST.

REV.	REVISIONS	CHK
	CHANGE NO	

BRUNING 40-522 15840

DRD 102-B

This drawing and specifications, herein, are the property of Digital Equipment Corporation and shall not be reproduced or copied or used in whole or in part as the basis for the manufacture or sale of items without written permission.

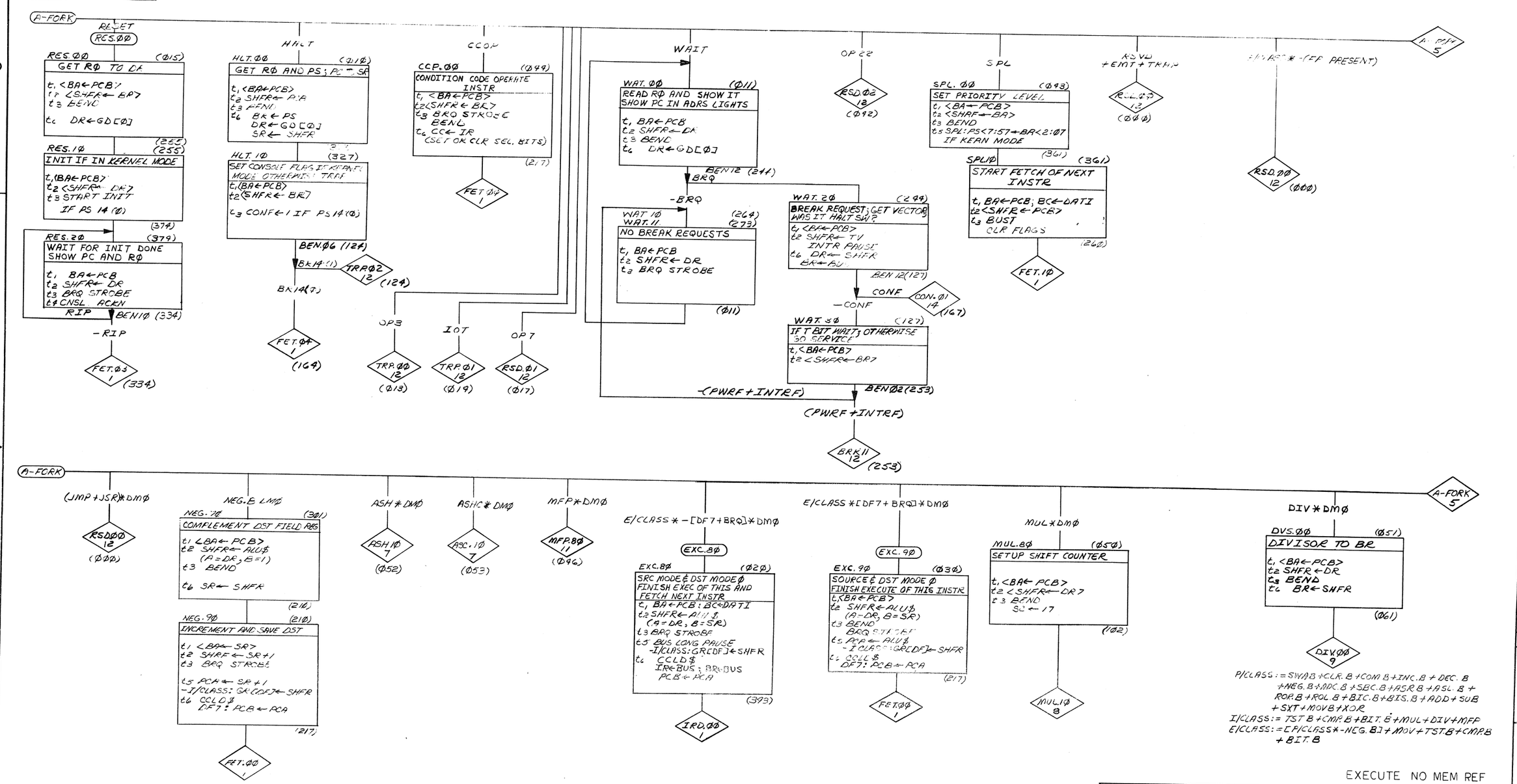

EXECUTE NO MEM REF

FIRST USED ON OPTION/MODEL	QTY.	DESCRIPTION	PART NO.	ITEM NO.
11/45		PARTS LIST		

UNLESS OTHERWISE SPECIFIED

UNLESS OTHERWISE SPECIFIED
DIMENSION IN INCHES
TOLERANCES
DECIMALS ± .005 FRACTIONS ± 1/64 ANGLES ± 0°30'
FINAL SURFACE QUALITY
REMOVE BURRS AND BREAK SHARP CORNERS

MATERIAL

FINISH

DRN.		DATE 9-6-71
CHK'D.		DATE
ENG.		DATE 4-5-72
PROJ. ENG.		DATE 4-5-72
PROD.		DATE 4-12-72
NEXT HIGHER ASSY	B-DD-KB11-Ø	
SCALE		
SHEET 4 OF 15		

digital EQUIPMENT CORPORATION MAYNARD, MASSACHUSETTS

TITLE KB11-A FLOW DIAGRAMS (FLOWS 3)

SIZE D CODE FD NUMBER KB11-A-03 REV A

DIST.

REVISIONS | CHANGE NO. | REV | CHK

DEC FORM NO DRD 102A

This drawing and specifications, herein, are the property of Digital Equipment Corporation and shall not be reproduced or copied or used in whole or in part as the basis for the manufacture or sale of items without written permission.

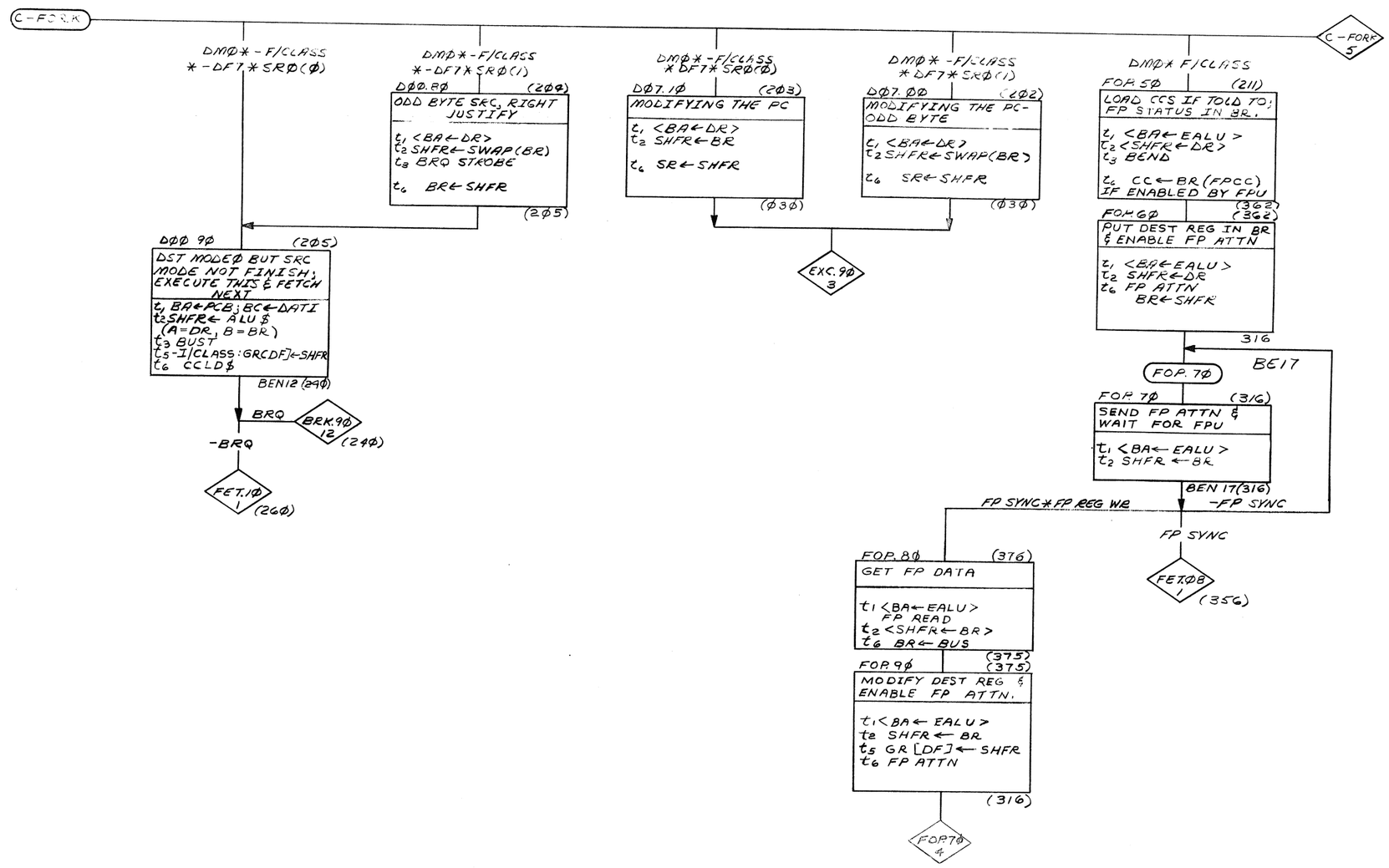

DESTINATION MODE Ø

FIRST USED ON OPTION/MODEL	QTY.	DESCRIPTION	PART NO.	ITEM NO.
11/45		PARTS LIST		

UNLESS OTHERWISE SPECIFIED DIMENSION IN INCHES. TOLERANCES

DECIMALS	ANGLES
.XXX = .005	±0° 30'
.XX = .02	
.X = .1	

REMOVE BURRS AND BREAK SHARP CORNERS SURFACE QUALITY ✓

MATERIAL: //

FINISH: //

		DATE
DRN.	Abbott	11-6-72
CHK'D.		
ENG.		4-3-72
PROJ. ENG.		4-3-72
PROD.		4-13-72

NEXT HIGHER ASSY.: B-DD-KB11-Ø

SCALE: //

SHEET 5 OF 15

digital EQUIPMENT CORPORATION MAYNARD MASSACHUSETTS

TITLE: KB11-A FLOW DIAGRAMS (FLOWS 4)

SIZE	CODE	NUMBER	REV
D	FD	KB11-A-Ø3	A

DIST.

This drawing and specifications, herein, are the property of Digital Equipment Corporation and shall not be reproduced or copied or used in whole or in part as the basis for the manufacture or sale of items without written permission.

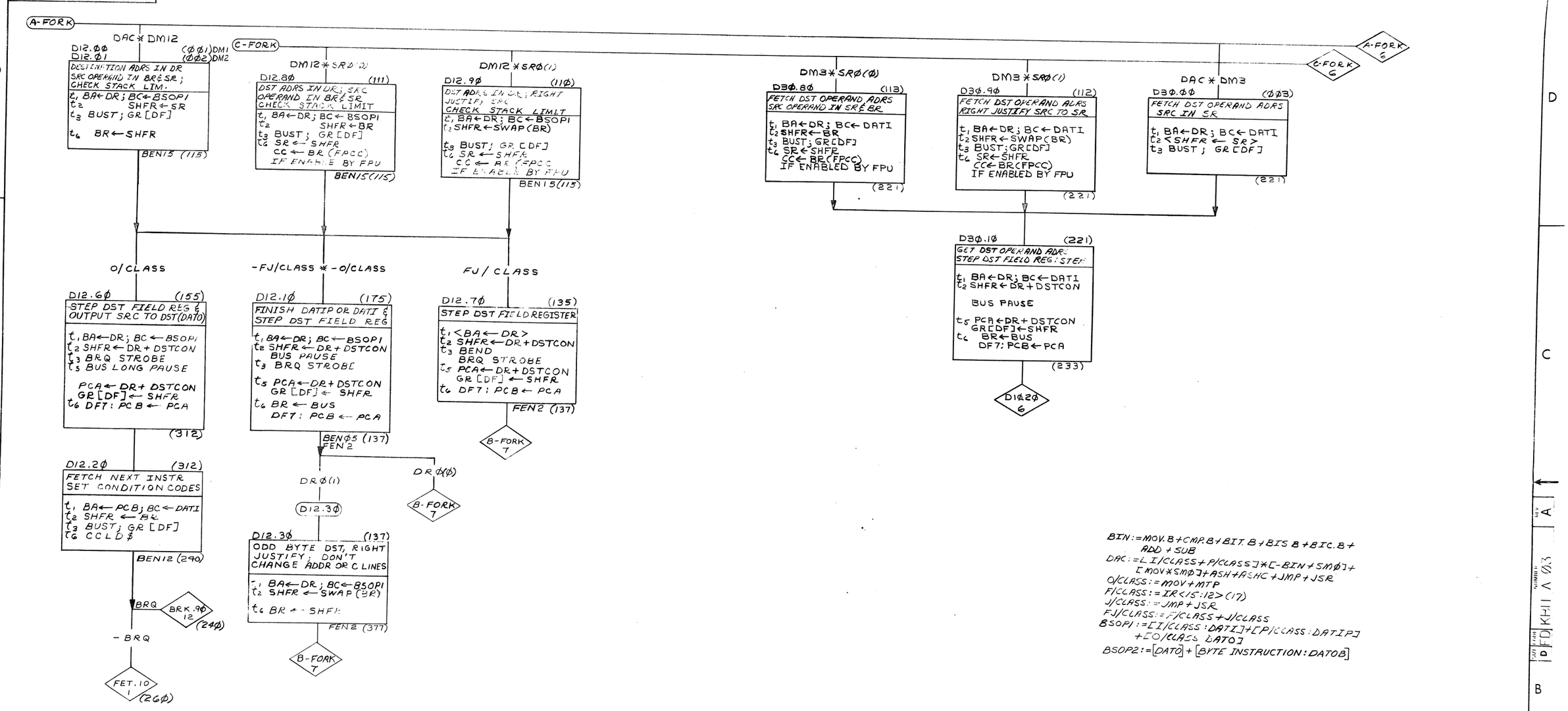

BIN:=MOV.B+CMP.B+BIT.B+BIS.B+BIC.B+ADD+SUB
DAC:=[I/CLASS+P/CLASS]*[-BIN+SMØ]+[MOV*SMØ]+ASH+ASHC+JMP+JSR
O/CLASS:=MOV+MTP
F/CLASS:=IR<15:12>(17)
J/CLASS:=JMP+JSR
FJ/CLASS:=F/CLASS+J/CLASS
BSOP1:=[I/CLASS:DATI]+[P/CLASS:DATIP]+[O/CLASS:DATO]
BSOP2:=[DATO]+[BYTE INSTRUCTION:DATOB]

DESTINATION MODES 1-3

FIRST USED ON OPTION/MODEL	QTY.	DESCRIPTION	PART NO.	ITEM NO
11/45		PARTS LIST		

UNLESS OTHERWISE SPECIFIED

UNLESS OTHERWISE SPECIFIED
DIMENSION IN INCHES
TOLERANCES
DECIMALS ± .005 FRACTIONS ± 1/64 ANGLES ± 0°30'
FINAL SURFACE QUALITY
REMOVE BURRS AND BREAK SHARP CORNERS

MATERIAL

FINISH

DRN. DATE
CHK'D DATE
ENG. DATE
PROJ. ENG. DATE
PROD. DATE
NEXT HIGHER ASSY. B-DD-KB11-Ø
SCALE
SHEET 6 OF 15

digital EQUIPMENT CORPORATION MAYNARD, MASSACHUSETTS

TITLE KB11-A FLOW DIAGRAMS (FLOWS 5)

SIZE D CODE FD NUMBER KB11-A-Ø3 REV A

DIST.

REVISIONS
REV. CHANGE NO. CHK.

This drawing and specifications herein are the property of Digital Equipment Corporation and shall not be reproduced or copied or used in whole or in part as the basis for the manufacture or sale of items without written permission.

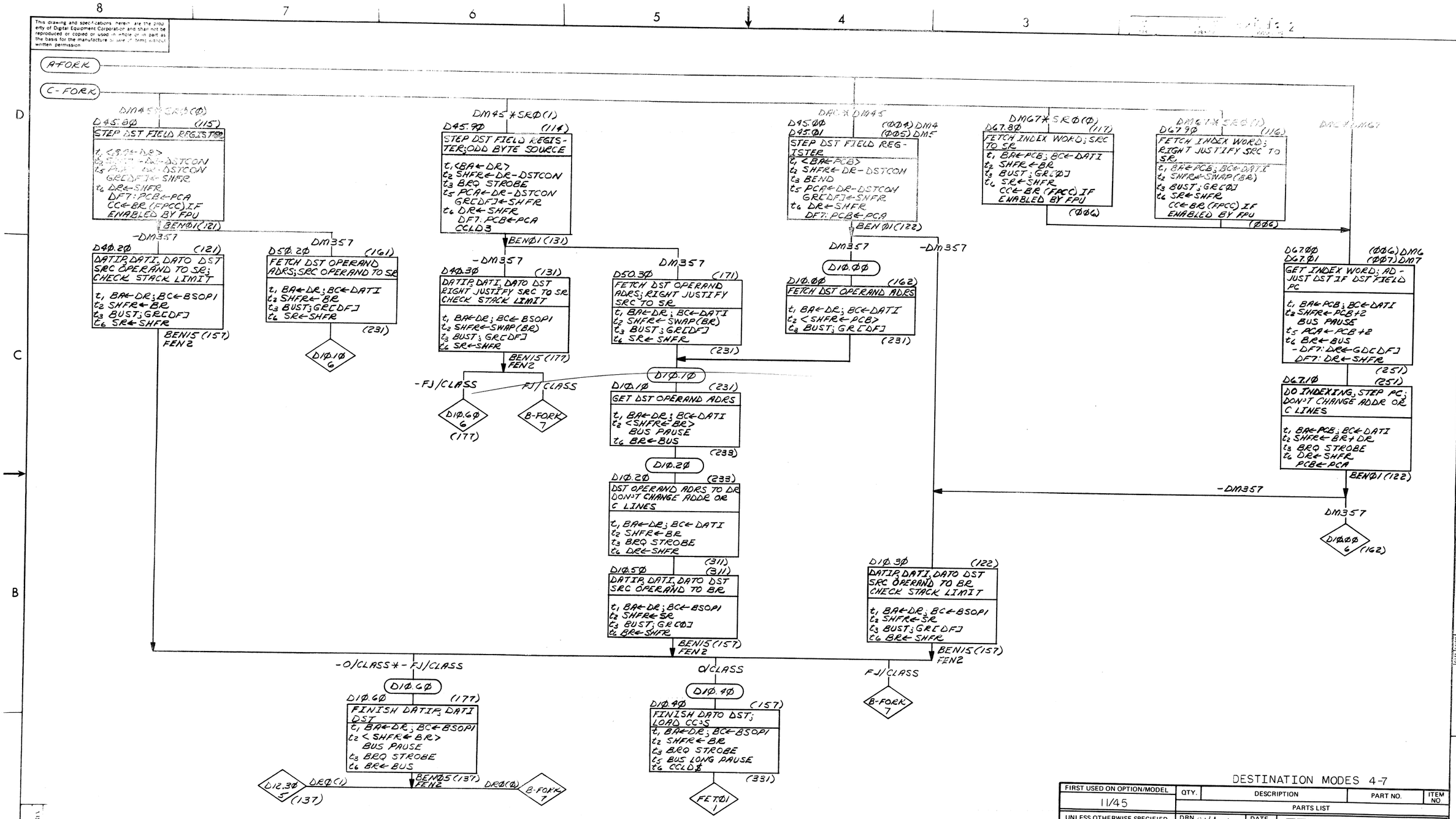

DESTINATION MODES 4-7

FIRST USED ON OPTION/MODEL	QTY.	DESCRIPTION	PART NO.	ITEM NO.
11/45		PARTS LIST		

UNLESS OTHERWISE SPECIFIED DIMENSION IN INCHES. TOLERANCES

DECIMALS	ANGLES
.XXX = .005 .XX = .02 .X = .1	±0° 30'

REMOVE BURRS AND BREAK SHARP CORNERS SURFACE QUALITY ✓

MATERIAL

FINISH

		DATE
DRN.	Wilcox	5-13-72
CHK'D		
ENG.		
PROJ. ENG.		
PROD.		

NEXT HIGHER ASSY. B-DD-KB11-0

SCALE

SHEET 7 OF 15

digital EQUIPMENT CORPORATION MAYNARD MASSACHUSETTS

TITLE KB11-A FLOW DIAGRAMS (FLOWS 6)

SIZE	CODE	NUMBER	REV
D	FD	KB11-A-03	A

DIST.

REV A

NUMBER D FD KB11-A-03

BRUNING 46.522 (1966)

This drawing and specifications, herein, are the property of Digital Equipment Corporation and shall not be reproduced or copied or used in whole or in part as the basis for the manufacture or sale of items without written permission.

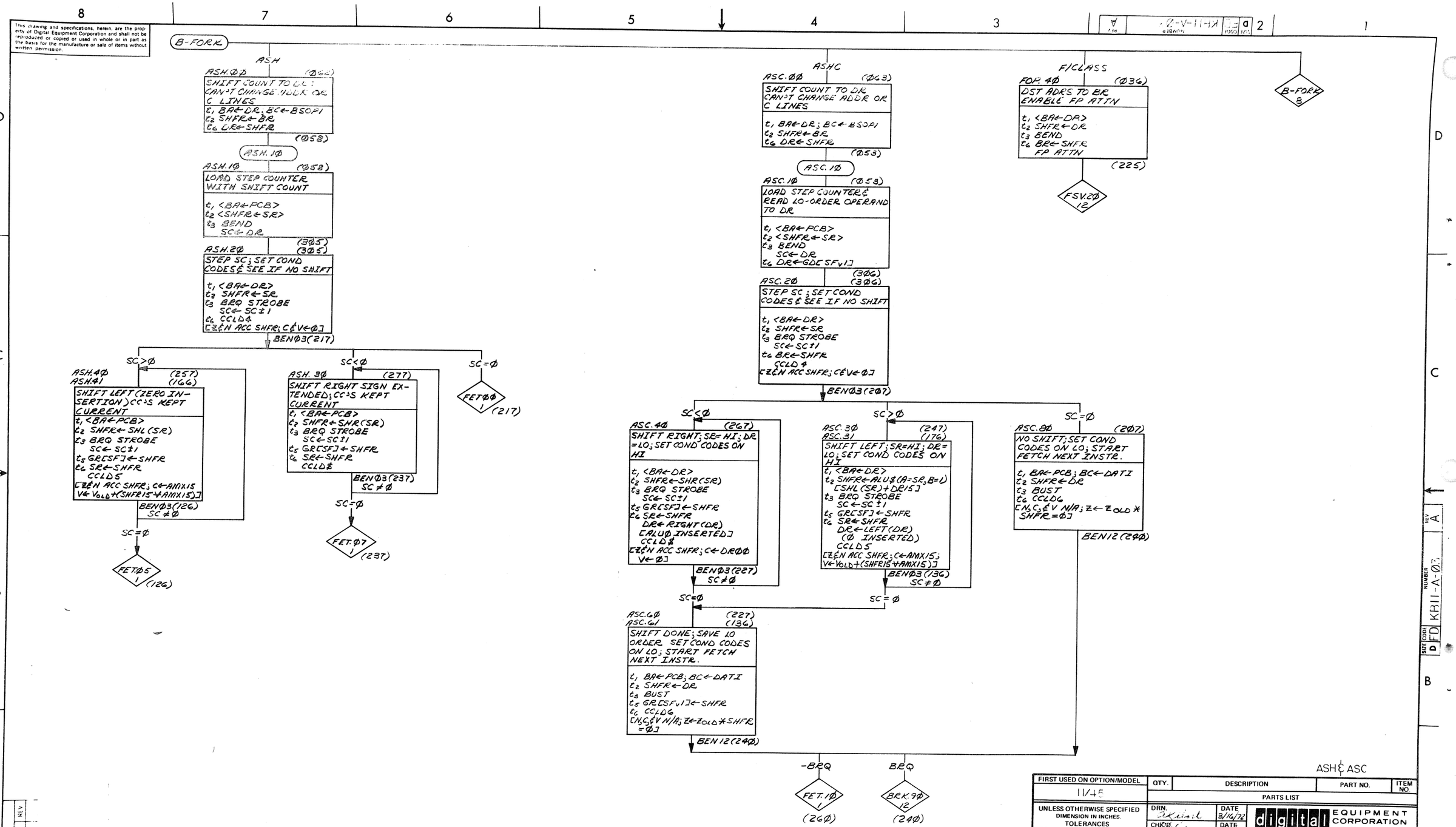

ASH & ASC

FIRST USED ON OPTION/MODEL	QTY.	DESCRIPTION	PART NO.	ITEM NO.
11/45		PARTS LIST		

UNLESS OTHERWISE SPECIFIED DIMENSION IN INCHES. TOLERANCES

DECIMALS	ANGLES
.XXX = .005	±0° 30'
.XX = .02	
.X = .1	

REMOVE BURRS AND BREAK SHARP CORNERS SURFACE QUALITY ✓

MATERIAL

FINISH

DRN.	DATE 3/16/72	digital EQUIPMENT CORPORATION MAYNARD MASSACHUSETTS
CHK'D	DATE	TITLE KB11-A FLOW DIAGRAMS (FLOWS 7)
ENG.	DATE	
PROJ. ENG.	DATE	
PROD.	DATE	
NEXT HIGHER ASSY.		
F-DD-KB11-Ø		SIZE D CODE FD NUMBER KB11-A-Ø3 REV A
SCALE		
SHEET 8 OF 15		DIST.

REVISIONS: REV | CHANGE NO | CHK

BRUNING 40.522 15840

SIZE D CODE FD NUMBER KB11-A-Ø3 REV A

This drawing and specifications, herein, are the property of Digital Equipment Corporation and shall not be reproduced or copied or used in whole or in part as the basis for the manufacture or sale of items without written permission.

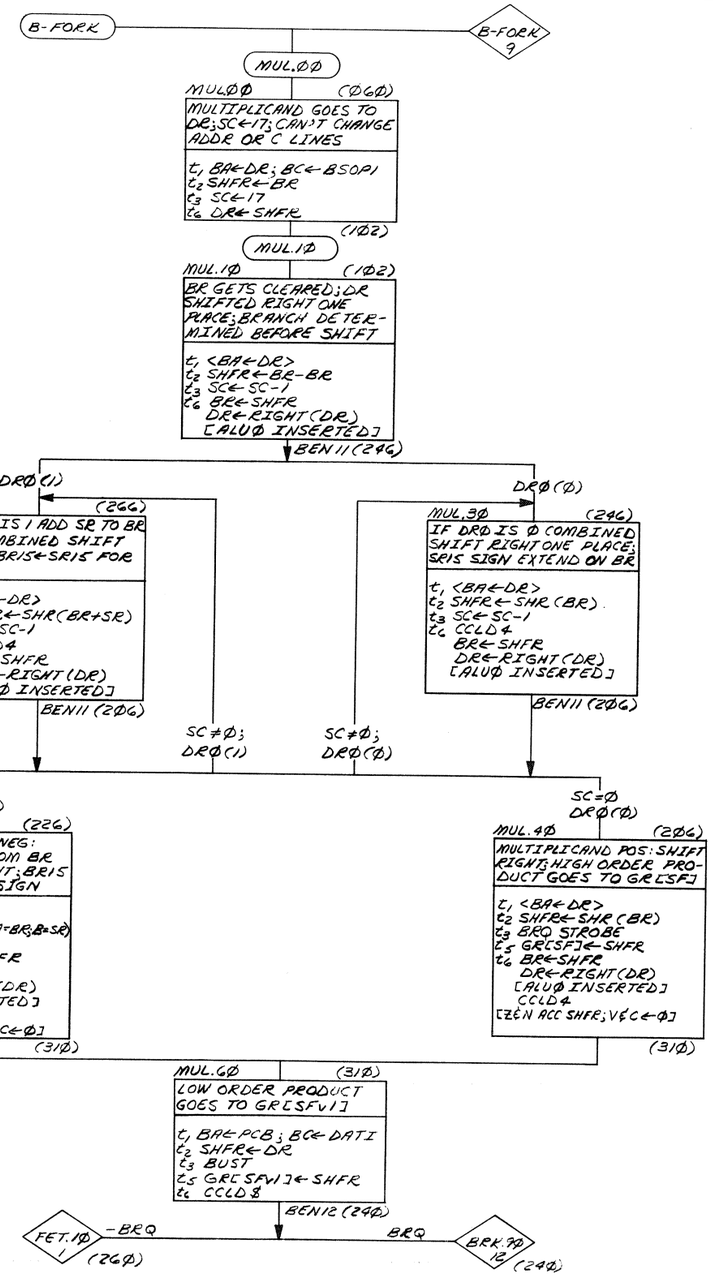

FIRST USED ON OPTION/MODEL	QTY.	DESCRIPTION	PART NO.	ITEM NO.
11/45		PARTS LIST		

UNLESS OTHERWISE SPECIFIED
DIMENSION IN INCHES
TOLERANCES

DECIMALS	ANGLES
.XXX = .005 .XX = .02 .X = .1	±0° 30'

REMOVE BURRS AND BREAK SHARP CORNERS SURFACE QUALITY ✓

MATERIAL

FINISH

DRN. Akilent	DATE 3/16/72	digital EQUIPMENT CORPORATION MAYNARD MASSACHUSETTS
CHK'D.	DATE 7/14	TITLE KB11-A FLOW DIAGRAM (FLOW 8)
ENG.	DATE	
PROJ. ENG.	DATE 1/72	
PROD.	DATE	

NEXT HIGHER ASSY. B-DD-KB11-Ø

SCALE

SHEET 9 OF 15

SIZE	CODE	NUMBER	REV.
D	FD	KB11-A-Ø3	A

DIST.

MULTIPLY

This drawing and specifications, herein, are the property of Digital Equipment Corporation and shall not be reproduced or copied or used in whole or in part as the basis for the manufacture or sale of items without written permission.

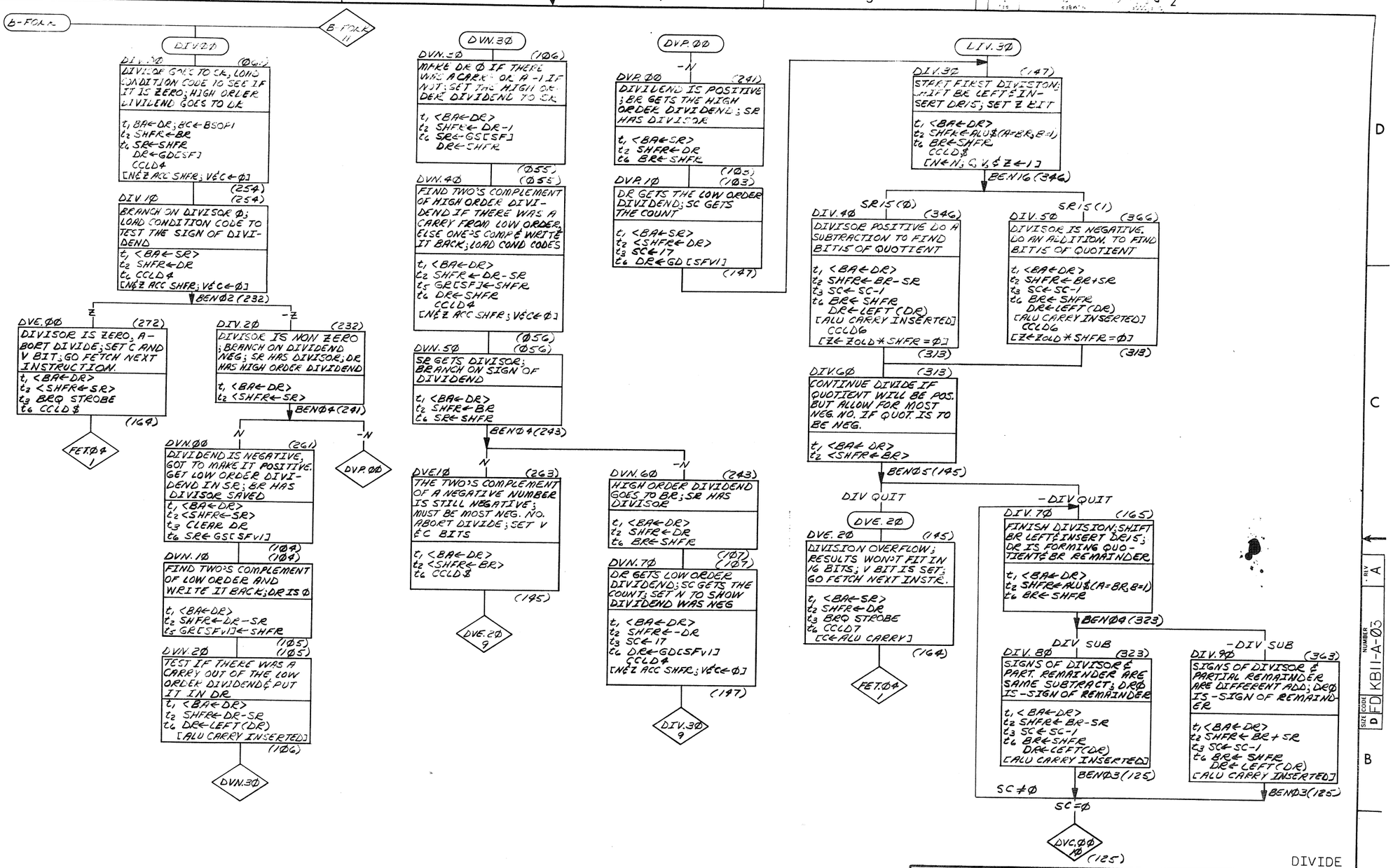

DIVIDE

FIRST USED ON OPTION/MODEL	QTY.	DESCRIPTION	PART NO.	ITEM NO.
11/45		PARTS LIST		

UNLESS OTHERWISE SPECIFIED DIMENSION IN INCHES. TOLERANCES

DECIMALS	ANGLES
.XXX = .005 .XX = .02 .X = .1	±0° 30'

REMOVE BURRS AND BREAK SHARP CORNERS SURFACE QUALITY ✓

MATERIAL #

FINISH —

DRN.	DATE 3/17/72	digital EQUIPMENT CORPORATION MAYNARD MASSACHUSETTS
CHK'D.	DATE	
ENG.	DATE	TITLE KB11-A FLOW DIAGRAMS (FLOWS 9)
PROJ. ENG.	DATE	
PROD.	DATE	

NEXT HIGHER ASSY. B-DD-KB11-Ø

SCALE

SHEET 10 OF 15

SIZE	CODE	NUMBER	REV.
D	FD	KB11-A-05	A

DIST.

SIZE D CODE FD NUMBER KB11-A-05 REV. A

This drawing and specifications, herein, are the property of Digital Equipment Corporation and shall not be reproduced or copied or used in whole or in part as the basis for the manufacture or sale of items without written permission.

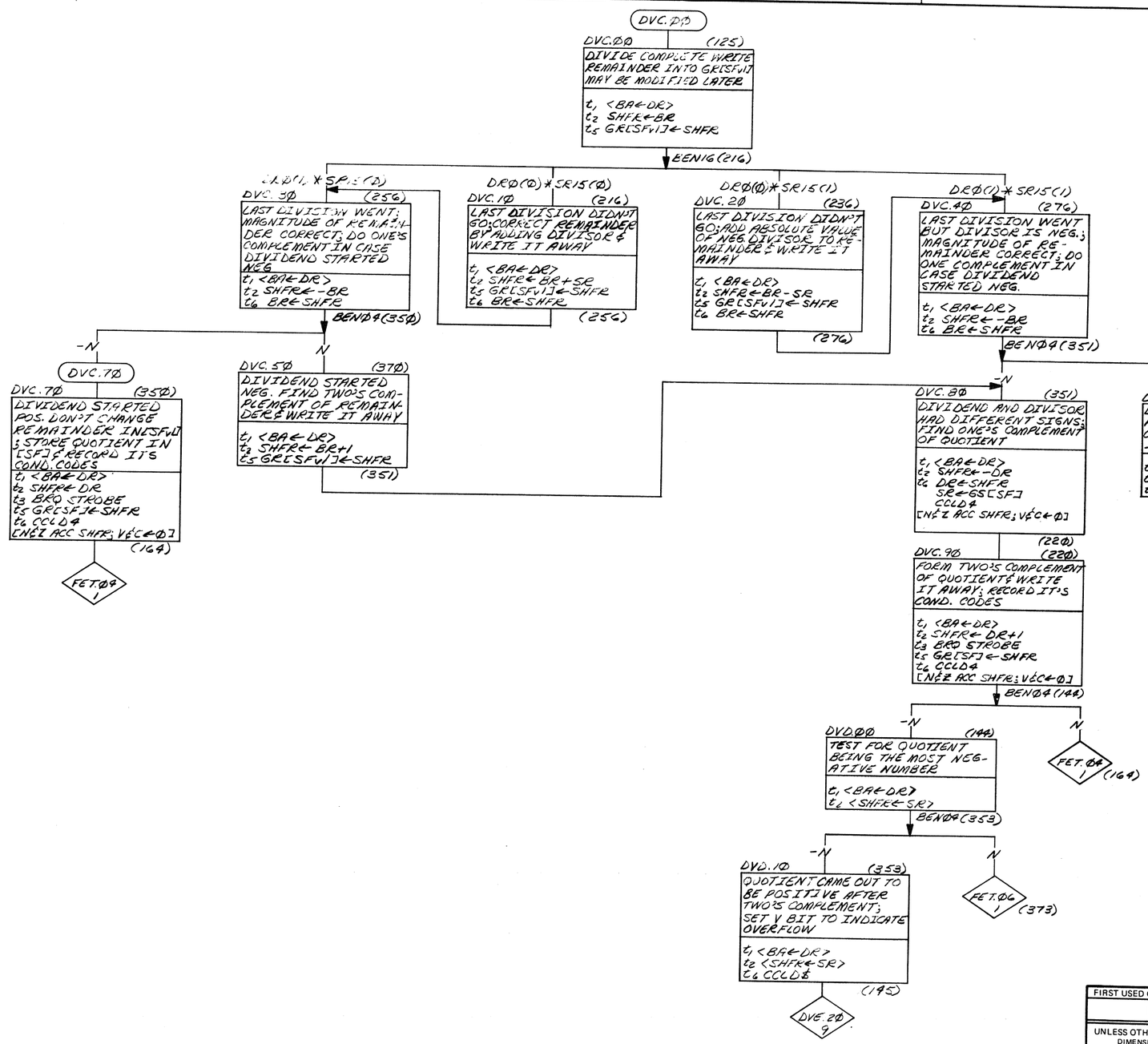

DIVIDE

FIRST USED ON OPTION/MODEL	QTY.	DESCRIPTION	PART NO.	ITEM NO.
11/45		PARTS LIST		

UNLESS OTHERWISE SPECIFIED DIMENSION IN INCHES. TOLERANCES

DECIMALS	ANGLES
.XXX = .005 .XX = .02 .X = .1	±0° 30'

REMOVE BURRS AND BREAK SHARP CORNERS SURFACE QUALITY ✓

MATERIAL

FINISH

		DATE
DRN.	Arlint	3/23/72
CHK'D.		7/12/72
ENG.		7 3 72
PROJ. ENG.		7 3 72
PROD.		

digital EQUIPMENT CORPORATION MAYNARD MASSACHUSETTS

TITLE KBII-A FLOW DIAGRAMS (FLOWS 1Ø)

NEXT HIGHER ASSY. B-DD-KBII-Ø

SCALE

SHEET 11 OF 15

SIZE	CODE	NUMBER	REV.
D	FD	KBII-A-Ø3	A

DIST.

This drawing and specifications, herein, are the property of Digital Equipment Corporation and shall not be reproduced or copied or used in whole or in part as the basis for the manufacture or sale of items without written permission.

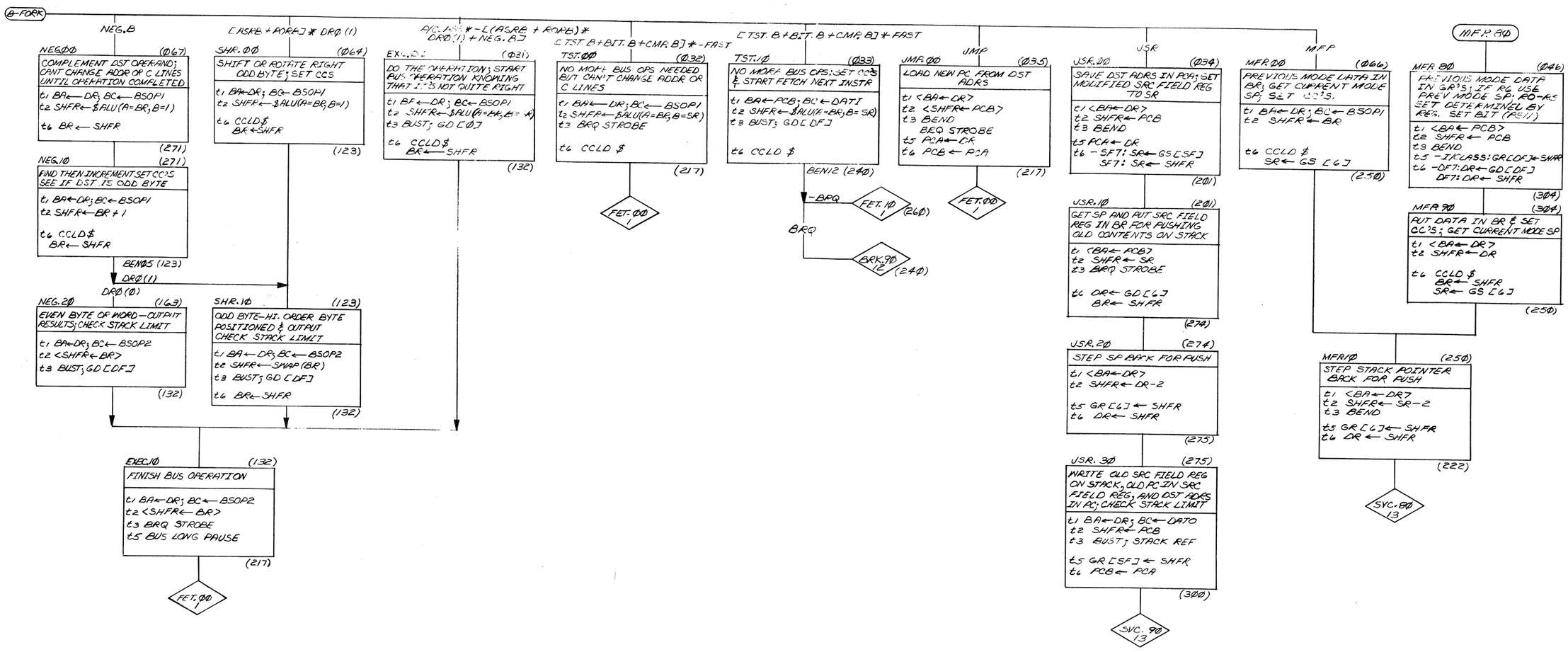

EXECUTE – MEM REF

FIRST USED ON OPTION/MODEL	QTY.	DESCRIPTION	PART NO.	ITEM NO.
11/45		PARTS LIST		

UNLESS OTHERWISE SPECIFIED DIMENSION IN INCHES. TOLERANCES

DECIMALS	ANGLES
.XXX = .005 .XX = .02 .X = .1	±0° 30'

REMOVE BURRS AND BREAK SHARP CORNERS SURFACE QUALITY ✓

MATERIAL —

FINISH —

		DATE
DRN.	M. Pe...	3/2/72
CHKD.	[illegible]	4/14/72
ENG.	[illegible]	4-2-72
PROJ. ENG.	[illegible]	4-2-72
PROD.	[illegible]	4-13-72

NEXT HIGHER ASSY. B-DD-KB11-Ø

SCALE —

SHEET 12 OF 15

digital EQUIPMENT CORPORATION MAYNARD MASSACHUSETTS

TITLE KB11-A FLOW DIAGRAMS (FLOWS 11)

SIZE	CODE	NUMBER	REV
D	FD	KB11-A-Ø3	A

DIST.

This drawing and specifications, herein, are the property of Digital Equipment Corporation and shall not be reproduced or copied or used in whole or in part as the basis for the manufacture or sale of items without written permission.

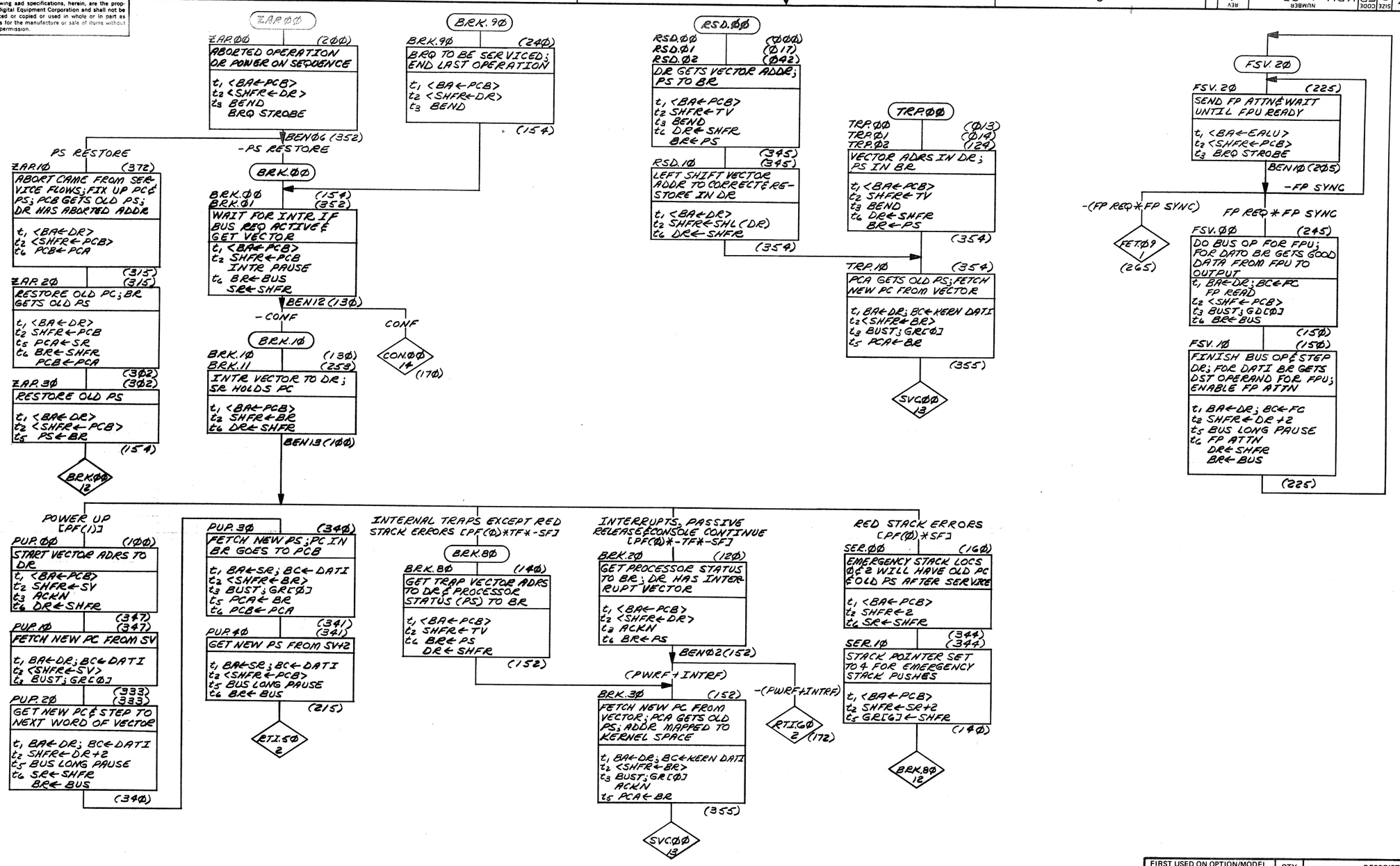

BREAK CONDITIONS

FIRST USED ON OPTION/MODEL	QTY.	DESCRIPTION	PART NO.	ITEM NO.
11/45		PARTS LIST		

UNLESS OTHERWISE SPECIFIED DIMENSION IN INCHES. TOLERANCES

DECIMALS	ANGLES
.XXX = .005 .XX = .02 .X = .1	±0° 30'

REMOVE BURRS AND BREAK SHARP CORNERS SURFACE QUALITY ✓

MATERIAL —/—

FINISH —/—

		DATE
DRN.	Wistant	3/22/72
CHK'D	Ted Stearns	4/17/72
ENG.	Steve Jenkins	4-3-72
PROJ. ENG.	Steve Jenkins	4-3-72
PROD.	Jack Hannan	4-13-72

NEXT HIGHER ASSY. B-DD-KB11-0

SCALE —/—

SHEET 13 OF 15

digital EQUIPMENT CORPORATION MAYNARD MASSACHUSETTS

TITLE KB11-A FLOW DIAGRAMS (FLOWS 12)

SIZE	CODE	NUMBER	REV.
D	FD	KB11-A-03	A

DIST.

REVISIONS: REV. / CHANGE NO. / CHK

BRUNING 40-522 15640

DEC FORM NO DRD 102-B

This drawing and specifications, herein, are the property of Digital Equipment Corporation and shall not be reproduced or copied or used in whole or in part as the basis for the manufacture or sale of items without written permission.

SVC.00

SVC.00 (355)
GET NEW PC TO BR; STEP DR FOR VECTOR +2 FETCH; PCA HAS OLD PS
t1 BA←DR; BC←KERN DATI
t2 SHFR←DR+2
t5 BUS LONG PAUSE
t6 BR←BUS
DR←SHFR

SVC.10 (065) (065)
FETCH NEW PS FROM VECTOR +2; ADDR MAPPED TO KERNEL SPACE; SP GETS OLD PC; PCB GETS OLD PS
t1 BA←DR; BC←KERN DATI
t2 SHFR←PCB
t3 BUST; GR[0]
t4 SR←SHFR
PCB←PCA

SVC.20 (357) (357)
GET NEW PS TO BR; DR GETS OLD PS; PCA←PCB GET NEW PC
t1 BA←DR; BC←KERN DATI
t2 SHFR←PCB
t5 BUS LONG PAUSE
PCA←BR
t6 BR←BUS
DR←SHFR
PCB←PCA

SVC.30 (360) (360)
PS GETS NEW PS; LOAD PREV MODE FROM CURRENT MODE; PCA & BR GET OLD PS; SP HAS OLD PC
t1 <BA←DR>; BC←KERN DATI
t2 SHFR←DR
t4 PS←BR; GR[6]
t5 PCA←DR
t6 BR←SHFR

SVC.40 (367) (367)
DR GETS NEW CURRENT MODE STACK POINTER; PCB HAS NEW PC; BR HAS OLD PS
t1 <BA←DR>
t2 <SHFR←PCB>
t6 DR←GD [6]

SVC.50 (037) (037)
STEP SP FOR PUSH; DR GETS SP-2; BR HAS OLD PS
t1 <BA←DR>
t2 SHFR←DR-2
t5 GR[6]←SHFR
t6 DR←SHFR

SVC.60 (025) (025)
PUSH OLD PS ONTO CURRENT MODE STACK; CHECK FOR STACK LIMIT; STEP SP FOR NEXT PUSH
t1 BA←DR; BC←DATO
t2 SHFR←DR-2
t3 BUST
t5 GR[6]←SHFR

(041)

SVC.70
13

SVC.70

SVC.70 (041)
FINISH PUSH; BR GETS OLD PC; DR GETS SP
t1 BA←DR; BC←DATO
t2 SHFR←SP
t5 BUS LONG PAUSE
t6 DR←GD[6]
BR←SHFR

(222)

SVC.80

SVC.80 (222)
DO PUSH ONTO STACK; CHECK FOR STACK LIMIT; IF INTR OR TRAP SERVICE; BR HAS OLD PC; PCB HAS NEW PC
t1 BA←DR; BC←DATO
t2 <SHFR←PCB>
t3 BUST; GR[6]

(300)

SVC.90

SVC.90 (300)
FINISH PUSH & STROBE BREAK REQUESTS
t1 BA←DR; BC←DATO
t2 <SHFR←BR>
t3 BRQ STROBE
t5 BUS LONG PAUSE

(217)

FET00
1

XXX.XX (337)
HARDWARE FAILURE! UNUSED ROM LOCATION
<BA←PCB>
<SHFR←DR>
(337)

XXX.XX (364)
HARDWARE FAILURE! UNUSED ROM LOCATION
<BA←PCB>
<SHFR←DR>
(364)

XXX.XX (365)
HARDWARE FAILURE! UNUSED ROM LOCATION
<BA←PCB>
<SHFR←DR>
(365)

XXX.XX (377)
HARDWARE FAILURE! UNUSED ROM LOCATION
<BA←PCB>
<SHFR←DR>
(377)

SERVICE SEQUENCE

FIRST USED ON OPTION/MODEL	QTY.	DESCRIPTION	PART NO.	ITEM NO.
11/45		PARTS LIST		

UNLESS OTHERWISE SPECIFIED DIMENSION IN INCHES. TOLERANCES

DECIMALS	ANGLES
.XXX = .005 .XX = .02 .X = .1	±0° 30'

REMOVE BURRS AND BREAK SHARP CORNERS SURFACE QUALITY ✓

MATERIAL —/—/—

FINISH —/—/—

		DATE
DRN.	W. Chroft	3/14/72
CHK'D	[illegible]	4/5/72
ENG.	Steve Jenkins	4-3-72
PROJ. ENG.	Steve Jenkins	4-3-72
PROD.	Jack Norman	4-13-72

NEXT HIGHER ASSY. B-DD-KB11-0

SCALE —/—

SHEET 14 OF 15

digital EQUIPMENT CORPORATION MAYNARD MASSACHUSETTS

TITLE KB11-A FLOW DIAGRAMS (FLOWS 13)

SIZE D CODE FD NUMBER KB11-A-03 REV. A

DIST.

REVISIONS | CHANGE NO. | REV | CHK

BRUNING 40-522 15840

DEC FORM NO DRD 102-B

This drawing and specifications, herein, are the property of Digital Equipment Corporation and shall not be reproduced or copied or used in whole or in part as the basis for the manufacture or sale of items without written permission.

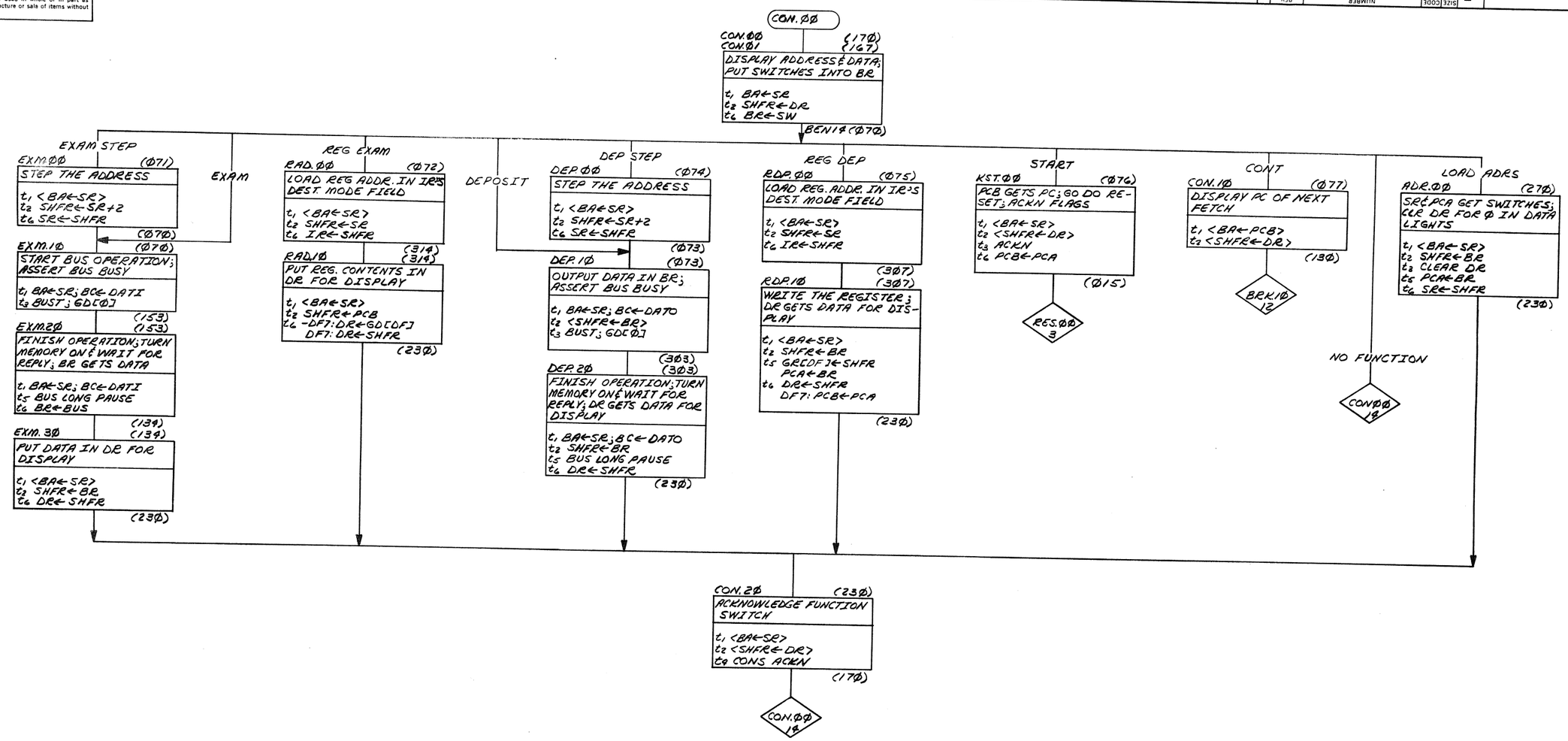

FIRST USED ON OPTION/MODEL	QTY.	DESCRIPTION	PART NO.	ITEM NO.
11/45		PARTS LIST		

CONSOLE

UNLESS OTHERWISE SPECIFIED DIMENSION IN INCHES. TOLERANCES

DECIMALS	ANGLES
.XXX = .005 .XX = .02 .X = .1	±0° 30'

REMOVE BURRS AND BREAK SHARP CORNERS SURFACE QUALITY ✓

MATERIAL —/—/—

FINISH —/—/—

		DATE
DRN.	akhart	3/21/72
CHK'D	[illegible]	3/22/72
ENG.	Steve Jenkins	4-3-72
PROJ. ENG.	Steve Jenkins	4-3-72
PROD.	[illegible]	4-13-72

NEXT HIGHER ASSY. B-DD-KB11-Ø

SCALE —/—/—

SHEET 15 OF 15

digital EQUIPMENT CORPORATION MAYNARD MASSACHUSETTS

TITLE KB11-A FLOW DIAGRAMS (FLOWS 14)

SIZE	CODE	NUMBER	REV.
D	FD	KB11-A-Ø3	A

DIST.

REVISIONS		
CHANGE NO		REV
CHK		

BRUNING 40-522 15840

DEC FORM NO DRD 102-B

SIZE D CODE FD NUMBER KB11-A-Ø3 REV A