digital EQUIPMENT CORPORATION
MAYNARD MASSACHUSETTS

DRAWING DIRECTORY

CUSTOMER PRINT SET INDEX

THIS IS PRINT SET

	SEQUENCE
DRAWING DIRECTORY	B-DD-H744-Ø
CIRCUIT SCHEMATIC	D-CS-H744-Ø-1
UNIT ASS'Y	E-U/-H744-0-0

SEQUENCE

MFG. SET

TEST PROCEDURE	A-SP-H744-Ø-3
MFG. SPE	A-SP-H744-Ø-8
PACKAGING INSTRUCTIONS	A-PI-3700074-0-0

UNIT VARIATIONS

VARIATION	TITLE	PRINT SET TYPE: H744-1
H744	+5V REGULATOR	X

REVISIONS			
DATE	CHG. NO.	REV	
	00005	A	S. Blake 10-6-7. J. W. LAWRENCE
	00007	B	C. Charles 4-11-74 R. WOLF 4-24-74

USED ON OPTION/MODEL	
11/45	

DRN. D. FONTAINE	DATE 3-4-72	TITLE +5V REGULATOR
CHK'D. D. FONTAINE	DATE 3-4-72	
PROJ ENG.	DATE 2-25-72	
PROD.	DATE	SIZE B / CODE DD / NUMBER H744-Ø / REV B
FIELD SERV.	DATE	
SHEET 1 OF 2		DIST

DRB 106

12251-1062-1-N871

ELECTRICAL

CUSTOMER PRINT SET						MFG SET	FIND NO.	DRAWING NO.	REV	NO OF SHT	DESCRIPTION	OPTION NO.
H744-1												
X							1	D-CS-H744-Ø-1	#	1	CIRCUIT SCHEMATIC	H744
						X		A-SP-H744-Ø-3			TEST PROCEDURE	H744
						X		A-SP-H744-Ø-8			MFG. SPEC	H744

MECHANICAL

CUSTOMER PRINT SET						MFG SET	FIND NO.	DRAWING NO.	REV	NO OF SHT	DESCRIPTION	OPTION NO.
H744-1												
X							1	E-UA-H744-Ø-Ø	K	1	UNIT ASSY	H744
								D-PS-1210737-0-0		1	HEAT SINK	H744
								D-IA-5309756-0-0		1	REGULATOR BRK'T	H744
								C-IA-5309761-0-0		1	2 - 5 CAP HOLDER	H744
								C-IA-5309760-0-0		1	COMPONENT COVER	H744
								C-MD-5309759-0-0		1	CAPACITOR STRAP	H744
							2	A-PI-3700074-0-0	-	2	PACKAGING INSTRUCTION	H744
								A-PS-9905211-0-0	-	2	OUTER CARTON	
								A-PS-9905212-0-0	-	2	INNER PACKAGE	

TITLE		SIZE	CODE	NUMBER	REV
+5V REGULATOR	SHEET 2 OF 2	B	DD	H744-Ø	B

DRB 108

DEC 16-(325)-1062-2-N871

This drawing and specifications herein are the property of Digital Equipment Corporation and shall not be reproduced or copied or used in whole or in part as the basis for the manufacture or sale of items without written permission

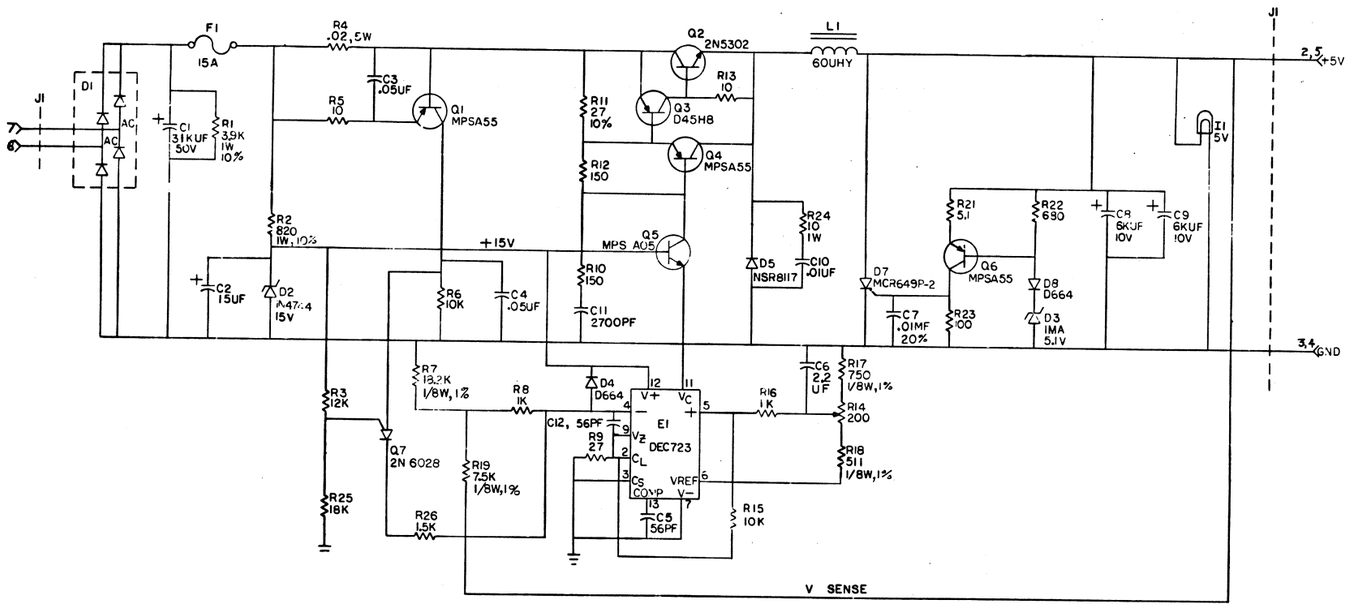

UNLESS OTHERWISE INDICATED:

RESISTORS ARE 1/4W, 5%

QTY	REF DESIGNATION	DESCRIPTION	PART NO.	ITEM NO.
		PARTS LIST		
	ETCH BOARD REV	F H		

DEC NO.	EIA NO.	DEC NO.	EIA NO.
1N904A	SAME	MPSA55	
D664	1N3606	2N5302	
[illegible]		D45H8	
1N744	SAME	MPSA05	
1N4744	SAME		
NSR8117			
2N6028			

SEMICONDUCTOR CONVERSION CHART

REV	CHANGE NO.	CHK	REVISIONS
K	H744-00005		[illegible]
J	H744-00004-48		[illegible]
H	H744-00003		[illegible]
F	H744-00002		[illegible]
E	H744-00001		[illegible]

DRN. [illegible] DATE 11-5-71
CHK'D. [illegible] DATE 11-5-71
ENG. [illegible] DATE 11/9/72
PROJ. ENG. [illegible] DATE [illegible]
PROJ. [illegible] DATE 11/3/72
NEXT HIGHER ASSY
SCALE
SHEET 1 OF 1

digital EQUIPMENT CORPORATION MAYNARD, MASSACHUSETTS

TITLE 5V REGULATOR

SIZE	CODE	NUMBER	REV.
D	CS	H744 -0-1	L

DIST.

DEC FORM NO DRD-136

This drawing and specifications herein are the property of Digital Equipment Corporation and shall not be reproduced or copied or used in whole or in part as the basis for the manufacture or sale of items without written permission.

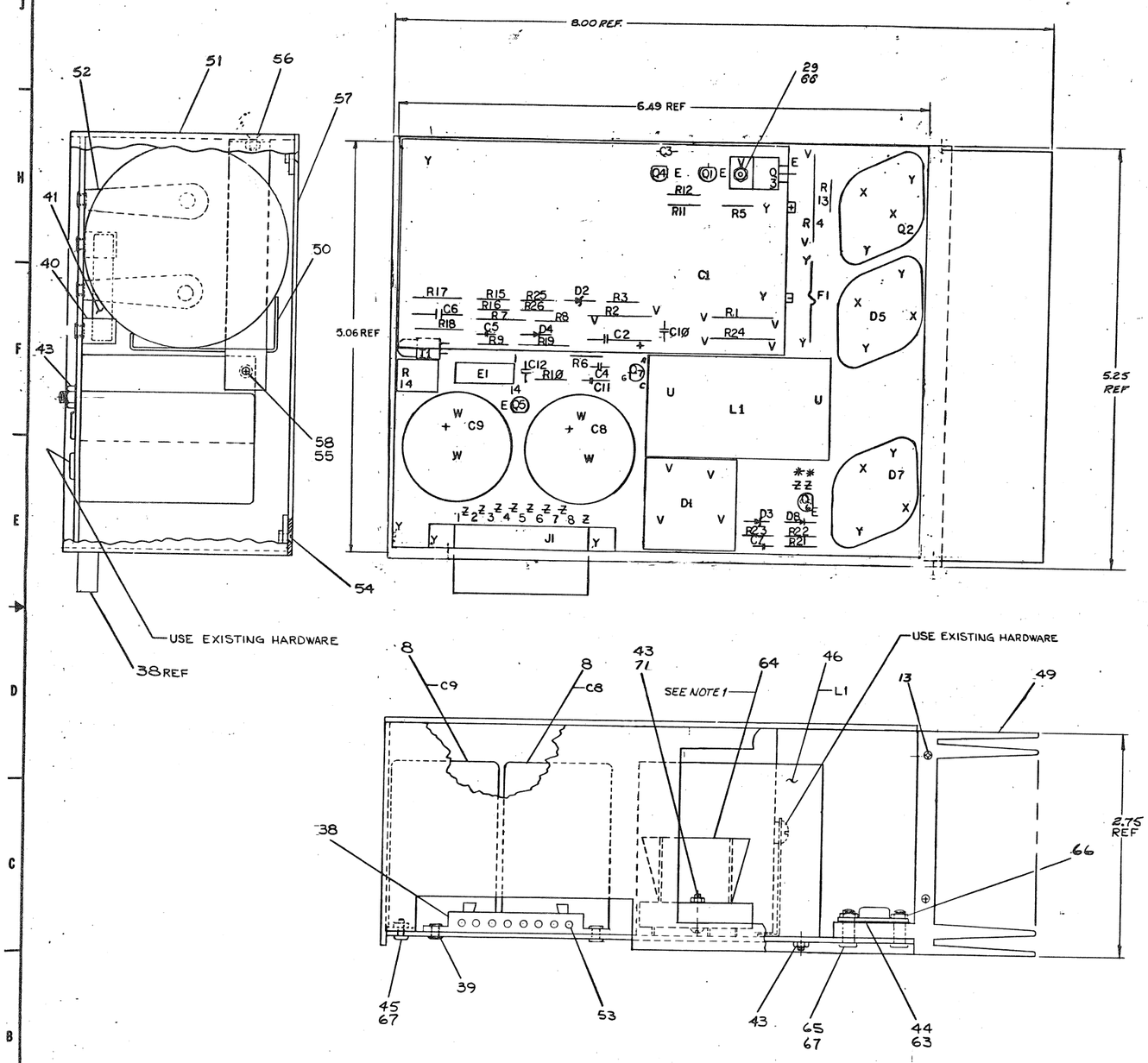

NOTES:

1. APPLY ITEM #63 (COMPOUND) BETWEEN TRANSISTOR (Q2) DIODES (D5, D7) AND ITEM #44 (WASHER) ALSO BETWEEN ITEM #44 (WASHER) AND HEAT SINK (ITEM #49). ALSO APPLY ITEM #63 (COMPOUND) BETWEEN ITEM #9 (DIODE BRIDGE) AND ITEM #64 (HEAT SINK BRIDGE).

QTY.	REF DESIGNATION	DESCRIPTION	PART NO.	ITEM NO.
1	I1	5 VOLT LAMP	12-09219-1	68
8		L WASHER #4	9006632	67
7		NUT KEPS #4-40	9006657	66
6		SCR. PHL PAN HD. #4-40 x 3/16 LG	9008033-1	65
1		HEAT SINK BRIDGE	1210907	64
NR		COMPOUND THERMAL JOINT	8008268	63
1	R26	RESISTOR 1.5K 1/4 W 5%	1300391	62
1	R19	RESISTOR 7.5K 1/8W 1%	1305322	61
1	R3	RESISTOR 12K 1/4W 5%	1300488	60
1	Q7	TRANSISTOR, UNIJUNCTION 2N6028	1310877	59
1		SCR. PHL PAN HD #6-32 X 1/4 LG	9006020-1	58
1		COVER	C-MD-5309760-0-0	57
1		SCR. PHL FLT HD #6-32 X 1/4 LG	9006020-2	56
1		WASHER, LOCK #6	9007649	55
4		SCR. PHL FLT. HD #4-40 x 5/16 LG	9006010-2	54
8		CONTACT FEMALE	1209456	53
2		STRAP, CAPACITOR	C-MD-5309759-0-0	52
1		BRACKET, REGULATOR	D-IA-5309756-0-0	51
1		HOLDER, CAPACITOR 2.5	C-IA-5309761-0-0	50
1		HEAT SINK REGULATOR	D-PS-1210737-0-0	49
2	C6, C12	CAP 56 PF	1000012	48
1	R24	RESISTOR 10 1W	1300171	47
1	L1	REACTOR 60 µHY MMC4347	1610850	46
2		SCR, PHL PAN HD #4-40. 1/4 LG	9006009-1	45
3		WASHER, INSULATOR	9006721	44
3		NUT, KEPS #6-32	9008185	43
				42
1	F1	FUSE 15 AMP	9007226	41
2		FUSE CLIP	9007203	40
6		EYELET GS-4-7	9006732	39
1	J1	MATE-N-LOCK CONN. 8 PIN	1209340	38
1	E1	INTEGRATED CIRCUIT DEC 723C	1910415	37
1	Q5	TRANSISTOR A05	1310705	36
1	Q3	TRANSISTOR D45H8	1310708	35
3	Q1, Q6, Q4	TRANSISTOR MPSA55 MOT	1310706	34
1	Q2	TRANSISTOR 2N5302	1310196	33
1	R14	RES, VARIABLE 200	1310852	32
1	R21	RES. 5.1 1/4W 5%	1309422	31
1	R23	RES, 100 1/4W 5%	1300229	30
1		SCR, PPH #4-40 X 5/16 LG	9006010	29
1	R11	RES 27 1/4W 10%	1301420	28
1	R17	RES 750 1/8W, 1%	1302955	27
1	R9	RES 27 1/4W 5%	1301522	26
1	R7	RES 18.2K 1/8W, 1%	1309412	25
2	R8, R16	RES 1K 1/4W 5%	1300365	24
1	R18	RES 511 1/8W 1%	1302411	23
1	R25	RES 18 K 1/4W 5%	1302465	22
2	R6, R15	RES 10 K 1/4W 5%	1300479	21
1	R4	RES .02 5W 3%	1310876	20
1	R2	RES 820. 1W 10%	1300358	19
1	R1	RES 3.9K 1W 10%	1302927	18
2	R5, R13	RES 10 1/4W 5%	1301317	17
2	R12, R10	RES 150 1/4W 5%	1300250	16
1	D3	DIODE ZENER 1 MA 5.1V	1110925	15
1	D7	SCR MCR 649P-2	1109465	14
4		SCR, PFH #4 X 5/16 LG, SELF TAP	9009142	13
1	D5	DIODE PWR NSR 8117	1110718	12
2	D4, D8	DIODE PWR D664	1100114	11
1	D2	DIODE ZENER IN4744	1105648	10
1	D1	DIODE BRIDGE	1110714	9
2	C8, C9	CAP 6K µf 10V	1010704	8
1	C1	CAP 31 K µf 50V	1010858	7
2	C4, C3	CAP .05 µf 25 V	1001774	6
1	C2	CAP 15 µf 20V 10%	1004812	5
1	C11	CAP 2700PF 100V 5% DM	1001637	4
2	C7, C10	CAP .01 µF 100V 20% DISC	1001610	3
1	C6	CAP 2.2 UF, 20V, 10%	1002627	2
1		ETCHED CIRCUIT BOARD	5009725	1
		ASSY/DRILLING HOLE LAYOUT	D-AH-H744-0-5	
		X-Y COORDINATE HOLE LOCATION	K-CO-H744-0-4	REF
		MODULE ECO HISTORY	D-MH-H744-0-6	REF
		CIRCUIT SCHEMATIC	D-CS-H744-0-1	REF

PARTS LIST

QTY.	REF DESIGNATION	DESCRIPTION	PART NO.	ITEM NO.
1		SCR, PHL PAN HD #6-32 5/8 LG.	9006025-1	71
1		PACKING INSTRUCTIONS	API-3700074-0-0	70
1	R22	RES 680 1/4W 5%	1301424	69

ETCH BOARD REV H

FIRST USED ON OPTIMOD D-UA-H742A-0-0

D664	IN3606		
IN4744			
DEC NO.	EIA NO.	DEC NO.	EIA NO.

SEMICONDUCTOR CONVERSION CHART

IC TYPE	GND	+15V
GND AND 5V ARE USUALLY PIN 7 AND 14 RESPECTFULLY EXCEPTIONS ARE STATED ABOVE		
IC PIN LOCATIONS		

ITEM NO	AWG	FROM PT	TO PT
JUMPER LIST			

µA 723C	7	12	

REV	DESCRIPTION	DATE	BY
L	ECO H744-0-0	11-6-73	R. WOLF
K	ECO H744-0-0	11-6-72	J. W. LAWRENCE
K	ECO H744-00005	9-9-72	G. POTTER
J	ECO H744-00004	8-4-72	G. POTTER
H	H744-00003	2-28-72	G. POTTER
F	H744-00002	8-29-72	G. POTTER
E	H744-00001	1-14-72	G. POTTER

DIGITAL EQUIPMENT CORPORATION MAYNARD, MASSACHUSETTS

TITLE: 5V REGULATOR

SIZE: E | CODE: UA | NUMBER: H744-0-0 | REV: L

SCALE: 2/1 | SHEET 1 OF 1 | DIST.

digital EQUIPMENT CORPORATION
MAYNARD MASSACHUSETTS

DRAWING DIRECTORY

CUSTOMER PRINT SET INDEX

THIS IS PRINT SET

	SEQUENCE		SEQUENCE
DRAWING DIRECTORY	B-DD-H745-Ø		
CIRCUIT SCHEMATIC	D-CS-H745-Ø-1		
UNIT ASS'Y	E-UA-H745-Ø-Ø		

MFG. SET

TEST PROCEDURE	A-SP-11/45-TA-2
MFG. SPEC.	A-SP-H745-Ø-B
PACKAGING INSTRUCTION	A-PI-3700074-0-0

UNIT VARIATIONS

VARIATION	TITLE	PRINT SET TYPE
H-Ø	-15V REGULATOR	

REVISIONS			
DATE	CHG. NO.	REV	
	00004	A	
			G. POTTER
	00005	B	S. Blake 10-6-72
			J. W. LAWRENCE
	00006	C	11-14-72
			G. POTTER
	00007	D	B. Hale 2-15-73
			G. POTTER
	00010	E	4-11-74
			R. WOLF
			4-24-74

USED ON OPTION/MODEL
11/45

DRN.	DATE	TITLE
CHK'D.	DATE 2-17-72	-15V REGULATOR
PROJ. ENG.	DATE 2-25-72	
PROD.	DATE	
FIELD SERV.	DATE	
SHEET 1 OF	DIST	

SIZE	CODE	NUMBER	REV
B	DD	H745-Ø	E

DRB 100

DEC 16-(325)-1062-1-N871

ELECTRICAL

CUSTOMER PRINT SET H745-1	MFG SET	FIND NO.	DRAWING NO.	REV	NO OF SHT	DESCRIPTION	OPTION NO.
X		1	D-CS-H745-Ø-1	#	1	CIRCUIT SCHEMATIC	H745
	X		A-SP-H745-TA-2			TEST PROCEDURE	H745
	X		A-SP-H745-Ø-8			MFG SPEC	H745

MECHANICAL

CUSTOMER PRINT SET H745-1	MFG SET	FIND NO.	DRAWING NO.	REV	NO OF SHT	DESCRIPTION	OPTION NO.
X		1	E-UA-H745-Ø-Ø	X1	1	UNIT ASS'Y	H745
			D-PS-1210737-0-0		1	HEAT SINK	H745
			D-IA-5309756-0-0		1	REGULATOR BRKT	H745
			D-IA-5309761-0-0		1	2 - 5 CAP BRKT	H745
			C-IA-5309760-0-0		1	COMPONENT COVER	H745
			C-MD-5309759-0-0		1	CAPACITOR STRAP	H745
		2	A-PI-3700074-0-0	-	2	PACKAGING INSTRUCTIONS	H745
			A-PS-990521H-0-0	-	2	OUTER CARTON	H745
			A-PS-990521J-0-0	-	2	INNER PACKAGE	H745

TITLE	SHEET 2 OF 2	SIZE	CODE	NUMBER	REV
-15V REGULATOR		B	DD	H745-Ø	E

DRB 108

DEC 16-(325)-1062-2-N871

This drawing and specifications, herein, are the property of Digital Equipment Corporation and shall not be reproduced or copied or used in whole or in part as the basis for the manufacture or sale of items without written permission

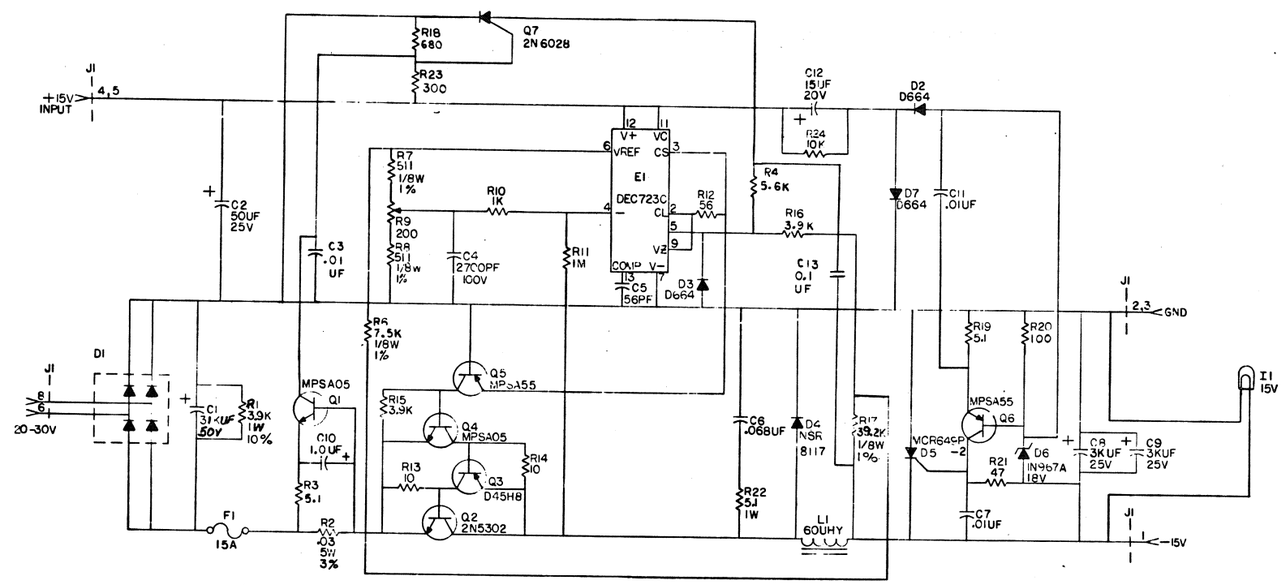

UNLESS OTHERWISE INDICATED:
RESISTORS = 1/4W, 5%

QTY	REF DESIGNATION	DESCRIPTION	PART NO.	ITEM NO.
		PARTS LIST		
	ETCH BOARD REV	E		

DEC NO.	EIA NO.	DEC NO.	EIA NO.
D664	IN 3606	D45H8	
NSR 8117		2N 6028	
MCR 649P − 2			
IN 967A	SAME		
2N 5302			
MPS A05			
MPS A55			

SEMICONDUCTOR CONVERSION CHART

REV	CHANGE NO.	CHK
L	H745-00009	R.J.WOLF 4/19/72
K	H745-00007	G.POTTER 12-15-72
J	H745-00006	G.POTTER 11-14-72
H	H745-00005	J.W. LAWRENCE 10/6/72
F	H745-00004	G.POTTER 10-5-72
E	H745-00003A	G.POTTER 6-26-72
D	H745-00002A	G.POTTER 5-11-72
C	H745-00001	G.POTTER 3-22-72

DRN. 11-4-71
CHK'D. 11-4-71
ENG. 11/11/72
PROJ. ENG. 11/11/72
PROG. 11/13/72
NEXT HIGHER ASSY
SCALE
SHEET 1 OF 1

digital EQUIPMENT CORPORATION MAYNARD MASSACHUSETTS

TITLE −15V REG.

SIZE D CODE CS NUMBER H745 −Ø−1 REV. L

DIST.

DEC FORM NO D1B2-158

This drawing and specifications, herein, are the property of Digital Equipment Corporation and shall not be reproduced or copied or used in whole or in part as the basis for the manufacture or sale of items without written permission.

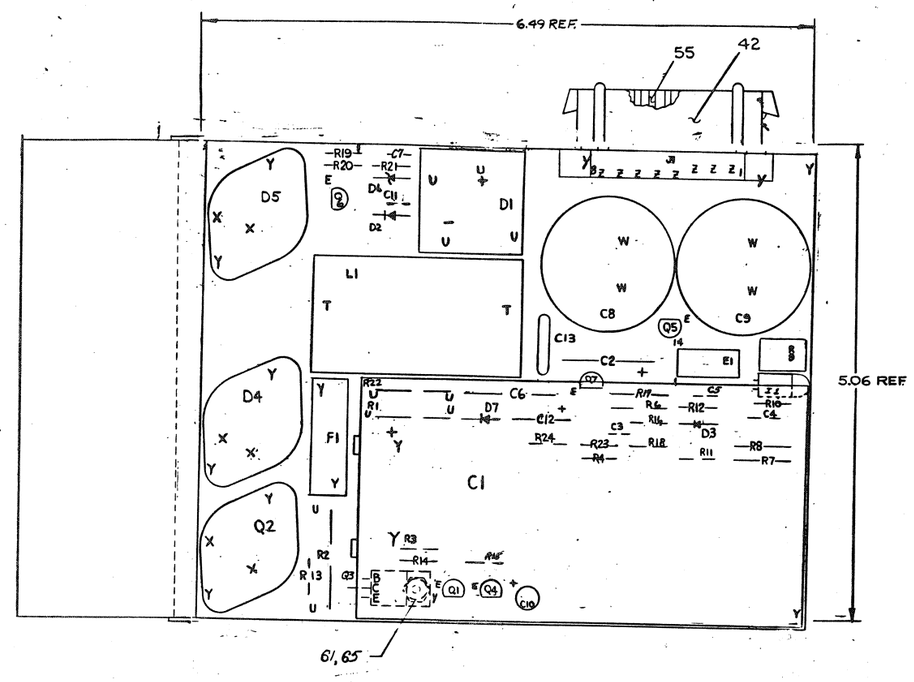

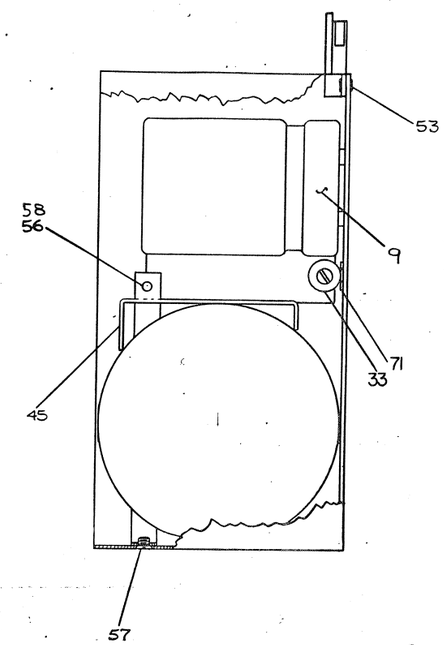

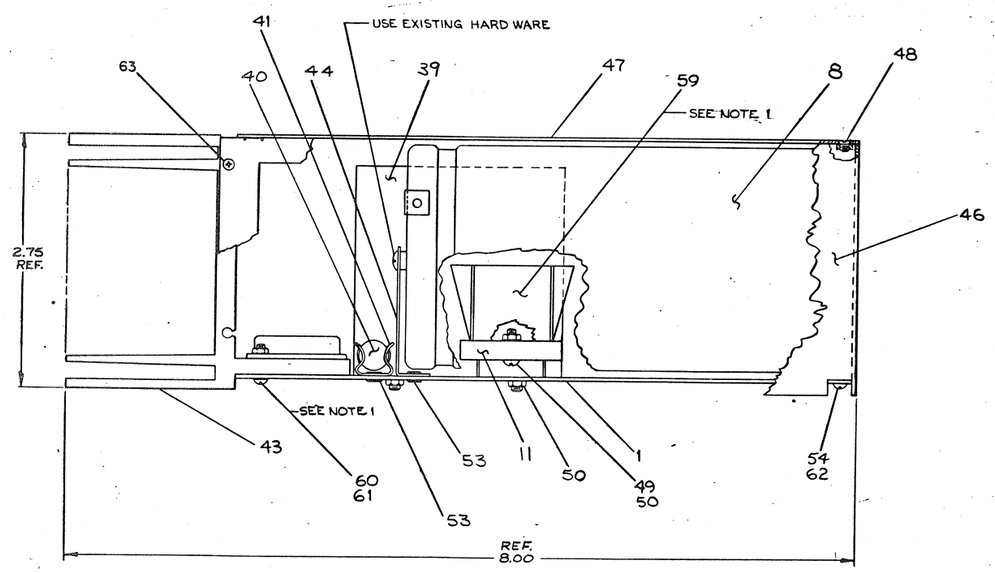

NOTE:

1. APPLY ITEM# 51 (THERMAL COMPOUND) BETWEEN TRANSISTOR AND INSULATOR, WASHER (ITEM# 52) ALSO BETWEEN WASHER & HEAT SINK FOR Q2, Q4 & D5 ALSO APPLY ITEM# 51 (COMPOUND) BETWEEN ITEM #11 (DIODE BRIDGE AND ITEM# 59 (HEAT SINK).
2. 1010621 MAY BE SUBSTITUTED FOR C13 (1000030).

QTY.	REF DESIGNATION	DESCRIPTION	PART NO.	ITEM NO.
		ASSY/DRILLING HOLE LAYOUT	D-AM-H745-0-5	70
1		PACKING INSTRUCTIONS	API-3700074-0-0	69
1	R18	RES. 680 1/4 W 5%	1301424	68
1	R23	RES. 300 1/4 W 5%	1301423	67
1	C13 (SEE NOTE 2)	CAP. 0.1 UF 100V 20%	1000030	66
1		SCR PH #4-40 X 5/16 LG	9006010-1	65
1	I1	LAMP 15V	1205169	64
4		SCR. PFH #4-4 X 5/16 LG. SELF TAPPING	9009412	63
2		L. WASHER #4	9006632	62
7		NUT KEPS #4-40	9008567	61
8		SCR PHL PAN HD #4-40 X 1/4 LG	9006013-1	60
1		HEAT SINK BRIDGE RECT	1210807	59
1		SCR PHL PAN HD #6-32 X 1/4 LG	9006020-1	58
1		SCR PHL FLT HD #6-32 X 1/4 LG	9006020-2	57
1		WASHER LOCK #6	9007649	56
8		CONTACT FEMALE	1209458	55
2		SCR PHL PAN HD#4-40 X 1/4 LG	9006009-1	54
8		EYELET 03-4-7	9005732	53
3		INSULATOR, WASHER	9008721	52
A/R		THERMAL COMPOUND	9008288	51
3		NUT KEPS 6-32	9008185	50
1		SCREW PHL PAN HD 6-32 X 1/4 LG	9006024-1	49
4		SCREW PHL FLT HD 4-40 X 5/16 LG	9006010-2	48
1		COVER/COMPONENT	C-HD-5300769-0-0	47
1		INSULATOR BRACE	D-IA-5300758-0-2	46
1		2.5 HOLDER CAPACITOR	C-IA-5300761-0-0	45
2		STRAP CAPACITOR	C-HD-5300758-0-0	44
1		HEAT SINK	D-PS-1210737-0-0	43
1	J1	CONN. MATE-N-LOK 8 PIN	1200940	42
2		FUSE CLIP	9007203	41
1	F1	FUSE AGC 15	9007226	40
1	L1	REACTOR 60 UHY	1610850	39
1	E1	INTEGRATED CIRCUIT LM723C	1910415	38
1	Q3	TRANSISTOR D45H8	1510703	37
2	Q5, Q6	TRANSISTOR A55	1510705	36
2	Q1, Q4	TRANSISTOR A65	1510706	35
1	Q2	TRANSISTOR 2N5302	1510755	34
1	R9	RES VARIABLE 200 Ω 20%	1310952	33
1	R20	RES 100 1/8 5%	1300229	32
1	R11	RES 1.8E6 1/8 5%	1309595	31
1	R4	RES. 5.6K 1/4 W 5%	1301874	30
2	R15, R16	RES 3.8K 1/8 5%	1300444	29
2	R19, R3	RES 5.1 1/8 5%	1300422	28
1	R12	RES 56 1/8 5%	1302802	27
1	R21	RES 47 1/8 5%	1300202	26
1	R17	RES 39.2K 1/8 W 1%	1301265	25
1	R10	RES 1K 1/8 5%	1300305	24
2	R13, R14	RES 10 1/8 5%	1301317	23
1	R6	RES 7.5K 1/8W 1%	1309322	22
2	R7, R8	RES 511 1/8W 1%	1302411	21
1	R22	RES 5.1 1W 5%	1302138	20
1	R24	RES 10K 1/8 5%	1300479	19
1	R2	RES .033 Ω 5W 3%	1310876-1	18
1	R1	RES 3.9K 1W 10%	1302927	17
1	D6	DIODE 1N967	1110068	16
1	D5	SCR MCR649P-2	1109485	15
1	D4	DIODE MSR8117	1110715	14
3	D3, D7, D2	DIODE D554	1100114	13
1	Q7	TRANSISTOR UNI JUNCTION 2N6028	1510877	12
1	D1	DIODE BRIDGE	1110714	11
1	C12	CAP 15UF 20V 10%	1004812	10
2	C8, C9	CAP 3.0K UF 25V	1010703	9
1	C1	CAP 31K UF 50V	1010858	8
1	C10	CAP 1.0 UF 25V	1010866-01	7
1	C2	CAP 50 UF 25V -10+75%	1001366	6
1	C6	CAP .068 UF 100V 10%	1000052	5
1	C4	CAP 2700PF 100V 5%	1001637	4
3	C7, C11, C3	CAP .01UF 100V 20%	1001610	3
1	C5	CAP 5K 100V	1000012	2
1		ETCHED CIRCUIT BOARD	5009723	1
		MATILE FOR HISTORY	D-AF-H745-0-A	REF
		CIRCUIT SCHEMATIC	CS-H745-0-1	REF
		X-Y COORDINATE HOLE LOCATION	X-Y-H745-0-A	REF

PARTS LIST

IC TYPE	GND	+15V
GND AND 5V ARE USUALLY PIN 7 AND 14 RESPECTFULLY EXCEPTIONS ARE STATED ABOVE		

IC PIN LOCATIONS

	7	11,12

ITEM NO	AWG	FROM PT	TO PT

JUMPER LIST

DEC. NO.	EIA NO.	DEC. NO.	EIA NO.
064	1N3606		

SEMICONDUCTOR CONVERSION CHART

REV.	CHANGE NO.	REVISIONS	CHK.
L	H745-00009	G. POTTER 12-20-72	
K	H745-00007	G. POTTER 12-15-72	
J	H745-00006	R. WOLF 11-14-72	
H	H745-00005	J.W. LAWRENCE 10-5-72	
F	H745-00004	G. POTTER 8-21-72	
P	H745-00003	G. POTTER 6-23-72	
E	H745-00003	G. POTTER 6-23-72	
D	H745-00002	G. POTTER 5-24-72	
C	H745-00001	G. POTTER 3-22-72	
B	H745-00001	G. POTTER 5-17-72	
A		G. POTTER 1-7-72	

TRANSIPAD	9008206	71	ETCH BOARD REV E

	DATE
DRAWN	12/29/70
CHECKED	1/11/71
ENGR.	1/11/71
PROJ. ENGR.	1/12/72
PROD. ENGR.	1/12/72
FIRST USED ON	1/13/72

SCALE: 1=1

SHEET 1 OF 1

DIGITAL EQUIPMENT CORPORATION
MAYNARD, MASSACHUSETTS

TITLE: -15 REGULATOR

SIZE	CODE	NUMBER	REV.
E	UA	H745-0-0	L

DIST.

digital EQUIPMENT CORPORATION
MAYNARD, MASSACHUSETTS

DRAWING DIRECTORY

CUSTOMER PRINT SET INDEX

	SEQUENCE
DRAWING DIRECTORY	B-DD-H746-Ø
CIRCUIT SCHEMATIC	D-CS-H746-Ø-1
UNIT ASSY	E-UA-H746-Ø-Ø

MFG SET

	SEQUENCE
TEST PROCEDURE	A-SP-H746-Ø-3
MFG SPEC.	A-SP-H746-Ø-8
PACKAGING INSTRUCTION	A-PI-3700074-0-0

THIS IS PRINT SET

UNIT VARIATIONS		PRINT SET TYPE
VARIATION	TITLE	H746-1
H746	MOS REGULATOR	X

REVISIONS

DATE	CHG. NO.	REV
2-23-72	-00005	A
3-27-72	-00006	B
7-24-73	-00007	C
4-24-74	-00012	D

USED ON OPTION/MODEL
11/45

DRN. D. FONTAINE	DATE 2-7-72	TITLE MOS REGULATOR	
CHK'D	DATE 2-11-72		
PROJ ENG.	DATE 2-25-72		
PROD.	DATE 2-25-72	SIZE B / CODE DD	NUMBER H746-Ø / REV D
FIELD SERV.	DATE 2-25-72		
SHEET 1 OF 2		DIST	

DRB 106

DEC 16—(325)—1062—1—N871

ELECTRICAL

CUSTOMER PRINT SET H746-1	MFG SET	FIND NO.	DRAWING NO.	REV	NO OF SHT	DESCRIPTION	OPTION NO.
X		1	D-CS-H746-Ø-1	K	1	CIRCUIT SCHEMATIC	H746
	X		A-SP-H746-Ø-3	#		TEST PROCEDURE	H746
	X		A-SP-H746-Ø-8	#		MFG. SPEC	H746

MECHANICAL

CUSTOMER PRINT SET H746-1	MFG SET	FIND NO.	DRAWING NO.	REV	NO OF SHT	DESCRIPTION	OPTION NO.
X		1	E-UA-H746-Ø-Ø	K	1	UNIT ASSY	H746
			D-PS-1210737-0-0	#	1	HEAT SINK	H746
			D-IA-5309756-0-0	#	1	REGULATOR BRK'T	H746
			C-IA-5309758-0-0	#	1	1.5.CAP BRK'T	H746
			C-IA-5309760-0-0	#	1	COMPONENT COVER	H746
			C-MD-5309759-0-0	#	1	CAPACITOR STRAP	H746
			A-PI-3700074-0-0	–	2	PACKAGING INSTRUCTION	H746
			A-PS-9905211-0-0	–	2	OUTER CARTON	
			A-PS-9905212-0-0	–	2	INNER PACKAGE	

TITLE		SIZE	CODE	NUMBER	REV
MOS REGULATOR	SHEET 2 OF 2	B	DD	H746-Ø	D

DRB 108

This drawing and specifications, herein, are the property of Digital Equipment Corporation and shall not be reproduced or copied or used in whole or in part as the basis for the manufacture or sale of items without written permission.

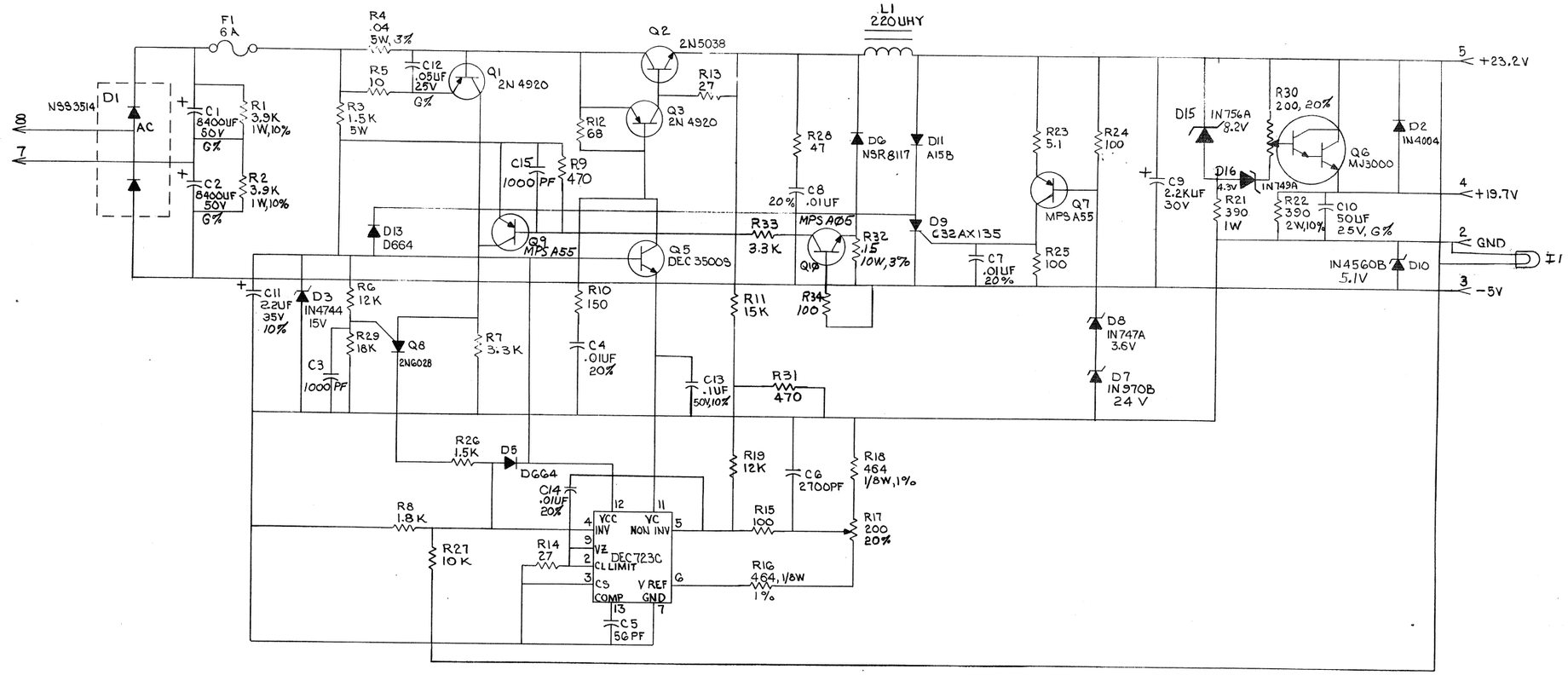

UNLESS OTHERWISE INDICATED:
CAPACITORS = 100V, 5%
RESISTORS = 1/4W, 5%
G% = -10% + 75%

QTY	REF DESIGNATION	DESCRIPTION	PART NO.	ITEM NO.

PARTS LIST

ETCH BOARD REV H

DEC NO.	EIA NO.	DEC NO.	EIA NO.

SEMICONDUCTOR CONVERSION CHART

REV	CHANGE NO.	REVISIONS
P	H746-00011	
N	H746-00010	
M	H746-00009	
L	H746-00008	
K	H746-00007	
J	H746-00006	
H	H746-00005	
F	H746-00004-4C	
E	H746-00003	
D	H746-00002	
C	H746-00001+1A	

CHK

DRN. Roger V. Doucette DATE 18 JAN 72
CHK'D DATE 2/1/72
ENG. DATE
PROJ. ENG. DATE
PROD. DATE 2/3/72
NEXT HIGHER ASSY
SCALE
SHEET 1 OF 1

digital EQUIPMENT CORPORATION MAYNARD, MASSACHUSETTS

TITLE MOS REGULATOR

SIZE D CODE CS NUMBER H746-0-1 REV. P

DIST.

DEC FORM NO. DRD-135

This drawing and specifications herein are the property of Digital Equipment Corporation and shall not be reproduced or copied or used in whole or in part as the basis for manufacture or sale of items without written permission.

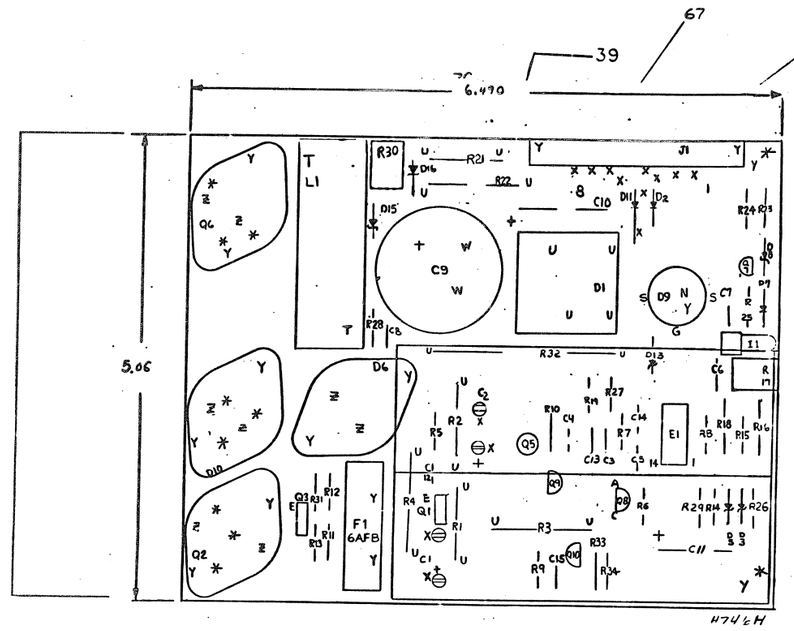

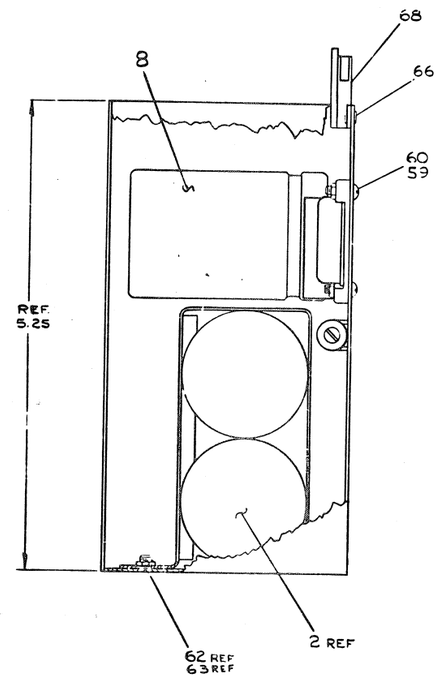

NOTES
APPLY ITEM #71 (COMPOUND) ON:
1. BOTH SIDES OF INSULATOR WASHERS FOR Q2, Q8, D6, D10.
2. BETWEEN ITEM #11 DIODE BRIDGE (D1) AND ITEM #65 HEAT SINK.

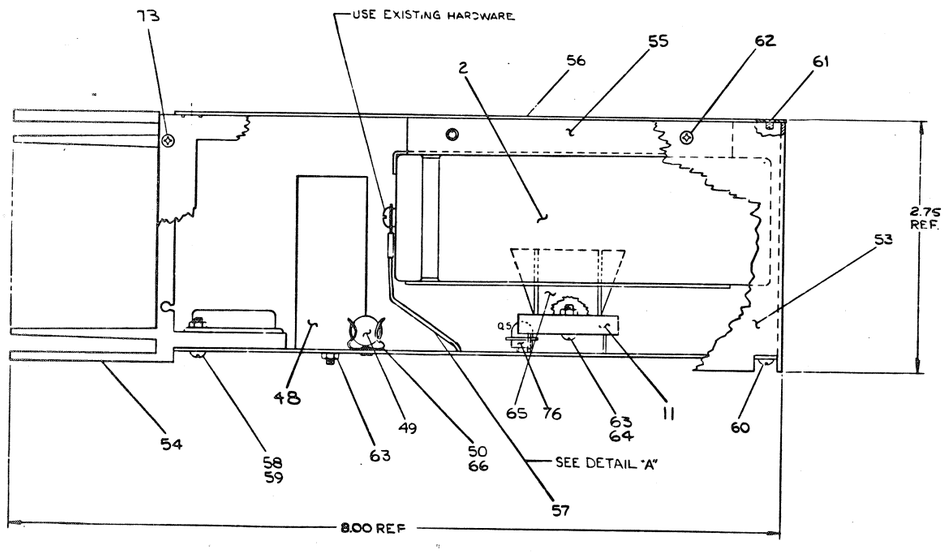

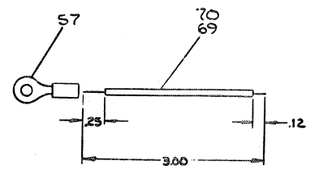

DETAIL "A"
SCALE: NONE
RED WIRE GOES TO POSITIVE TERMINAL
BLK WIRE GOES TO NEGATIVE TERMINAL

QTY	REF DESIGNATION	DESCRIPTION	PART NO.	ITEM NO.
2	R7, R33	RES. 3.3K, 1/4W, 5%	13-00439	29
1	R8	RES. 1.8K, 1/4W, 5%	13-00398	74
1	R32	RES. .15Ω 10W 3%	13-11625	28
1	D9	SCR C32AX135	15-10928	15
1	Q10	TRANSISTOR A05 (MOT)	15-10705	84
2	C3, C15	CAP. 1000PF, 100V DM	10-00042	85
1	C13	CAP. .1UF, 50V, 10%	10-10978-36	92
1	R12	RES 68, 1/4W, 5%	13-00219	81

PARTS LIST

QTY	REF DESIGNATION	DESCRIPTION	PART NO.	ITEM NO.
		ASSY/DRILLING HOLE LAYOUT	1-AH-746-0-5	PLF
1		PACKING INSTRUCTIONS	API-370074-0-0	80
1	D15	DIODE IN456A	[illegible]	[illegible]
1	R21	RES 390 1W 5%	[illegible]	[illegible]
1	I1	LAMP 24V	[illegible]	77
2		TRANSIPAD	[illegible]	76
1	D8	DIODE IN747A	1105672	75
4		SCR PHL FLAT HD. #4 SELF TAPPING	9009142-02	73
4		WASHER INSULATOR	9001721	72
A R		COMPOUND THERMAL	9008358	71
A R		#18 AWG STRD TLF INS (BLK)	9101280 00	70
A R		#18 AWG STRD TLF INS (RED)	9101280 22	69
1		MATE-N-LOCK CONN 8 PIN	1109340	68
8		CONTACT FEMALE	1109458	67
4		SPLLT LG-4-7	9018132	66
1		HEAT SINK, DRILLED	12 0007	65
1		SCR PHL PAN HD 8 32 X 3/8	9096025.1	64
5		KLPS NUT 8-32	9051189	63
2		SCR PHL FLAT HD 8 32 X 5/16	9001721-2	62
4		SCR PHL FLAT HD 4 40 X 1/4	9CC 009-2	61
4		SCR PHL PAN HD. 6 40 X 3/8	9006011-1	60
8		KLPS NUT 4-40	9009557	59
6		SCR PHLPAN HD 4 40 X 1/2	9006013-1	58
4		TERMINAL RING	8001830	57
1		COVER COMP	C-HD-5209760 0 0	56
1		I S CFP BRKT	C-IA 5209750-0-0	55
1		HEAT SINK, REGULATOR	C-PS 1210731 0 0	54
1		BRACKET, REG	C-IA 5209756-0-5	53
4		SPLIT LGS	9008735	52
1	Q8	TRANSISTOR 2N6028	15 10377	51
2		FUSE CLIP	9007203	50
1	F1	FUSE 6AFB	9007808	49
1	L1	REACTOR 220UH	16 10889	48
1	I1	INTEGRATED CIRCUIT UA723C	18-10415	47
2	Q7 Q9	TRANSISTOR A55 (MOT)	15-10[illegible]	46
1	Q8	TRANSISTOR MJ3000 (MOT)	15-11349	45
1	Q5	TRANSISTOR 2N3505	15-03259	44
1	Q2	TRANSISTOR 2N5010	15-10218D	43
2	Q1, Q3	TRANSISTOR 2N4920	15 08105	42
2	R17, R30	RES VARIABLE 200, 20%	13-10352	41
1	R23	RES 5.1 Ω 5%	13 09422	40
2		#10 LOCKWASHER EXTERNAL TOOTH	9007651	39
2	R31 P9	RES 470 Ω ¼W 5%	13-00316	38
1	R11	RES 15K Ω 5%	13-00426	37
1	R10	RES 150 Ω 5%	13-00250	36
1	R27	RES 10Ω 1/4W 5%	13-00479	34
2	R8, R19	RES 1.2K Ω 5%	13 00408	33
4	R15, R25, R24, R34	RES 100 Ω 5%	13-00228	32
2	R13, R14	RES 22 1/4W 5%	13-01522	31
1	R5	RES 18 Ω 5%	13-01317	30
				29
				28
2	R18, R18	RES 4641 Ω 1%	13-09047	27
1	R29	RES 18K Ω 5%	13-02405	26
1	C11	CAP. 2.2UF 35V 10%	10-02431	25
1	R4	RES .04 5W 3%	13-11362	24
1	R3	RES 1-0W 5%	13-01897	23
1	R22	RES 300 2W 10%	13-01880	22
1	R28	RES 1.5Ω 1/2W 5%	13-00391	21
2	R1, R2	RES 3 2W 1% 10%	13-02927	20
1	R20	RES 47 Ω 5%	13-00202	19
1	C11	DIODE IN5624	11-10420	18
1	C2	DIODE 1N4006	11-05796	17
1	C10	DIODE IN4580B	11-10355	16
1	C7	DIODE IN3700	11-10354	14
1	C8	DIODE TRANSPB117	11-10715	13
1	C3	DIODE IN4744	11-03648	12
1	C1	DIODE MSS 3514	11-10714	11
2	D5, D13	DIODE D004	11-00114	10
1	C10	CAP 50UF 25V -10+75	10-01788	8
1	C9	CAP 2 2K UF 30V	10-10859	9
4	C1/C2/C4/C14	CAP .01UF 100V 20%	10-01610	7
1	C6	CAP 2200PF 100 5%	10-01837	6
1	C5	CAP 560PF 100V 5%	10-00012	5
1	D16	DIODE IN749A	11-05377	4
1	C12	CAP 60UF 25V	10-01714	3
2	C1 C2	CAP 8 4UF 50V	10-10851	2
1		ETCHED CIRCUIT BOARD	9008721	1
		MODULE ECO HISTORY	B-MH-10-0-0	PLF
		X-Y COORDINATE HOLE LOCATION	X-CO-H746-0-0	PLF
		CIRCUIT SCHEMATIC	C-CS-H746-0-1	PLF

PARTS LIST

CTY	REF DESIGNATION	DESCRIPTION	PART NO.	ITEM NO.

ETCH BOARD REV H

DEC NO.	EIA NO.	DEC NO.	EIA NO.
D664	1N3606		
1N4001	SEE MR2004		

SEMICONDUCTOR CONVERSION CHART

REV	REVISIONS	CHANGE NO.
A	H746-00001	
B	H746-00010	
C	H746-00003	
D	H746-00002	
E	H746-00005	
F	H746-00007	
G	H746-00008	
H	H746-00009	
J	H746-00011	
K	H746-00012	
L	H746-00013	
M	H746-00014	
N	H746-00015	
P	H746-00016	

IC TYPE	GND	+5V
GND AND 5V ARE USUALLY PIN 7 AND 14 RESPECTIVELY EXCEPTIONS ARE STATED ABOVE		

IC PIN LOCATIONS

ITEM NO.	AWG	FROM PT	TO PT

JUMPER LIST

DRN. R. WOLF 3/27/74
CHK'D. 3/27/74
LTR'D. 12 12 73
PROJ. R. WOLF 12/11/73
PROD. 12/11/73
ENG. 12/11/73
NEXT HIGHER ASSY

DIGITAL EQUIPMENT CORPORATION MAYNARD, MASSACHUSETTS

TITLE MOS REGULATOR

SIZE E CODE 1 DIJA MODEL H746-0-0 REV. P

SCALE NONE
SHEET 1 OF 1
DIST.

This drawing and specifications herein, are the property of Digital Equipment Corporation and shall not be reproduced or copied or used in whole or in part as the basis for the manufacture or sale of items without written permission.
COPYRIGHT © 1972 DIGITAL EQUIPMENT CORPORATION

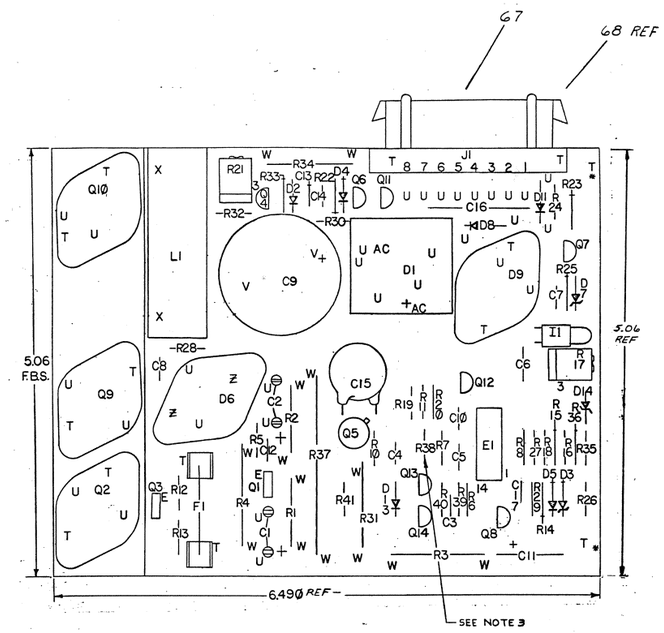

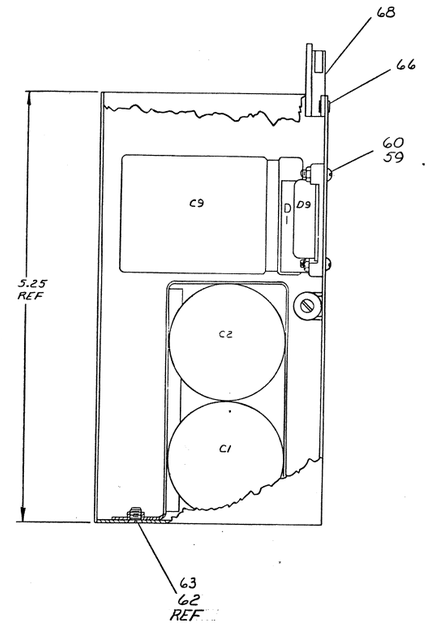

NOTES:
1. APPLY ITEM #71 (COMPOUND) ON BOTH SIDES OF ITEM #72 (INSULATOR WASHER) FOR Q2, Q9, Q10. ALSO APPLY BETWEEN ITEM # 11 (DIODE BRIDGE D1). AND ITEM # 65 (HEAT SINK, BRIDGE RECT.).
2. UNLESS OTHERWISE INDICATED: RESISTORS ARE 1/4W, ±5%. CAPACITORS ARE 100V, ±5%.
3. ADD INSULATION (9107256-11) TO BOTH LEADS OF R38 TO AVOID SHORT TO ETCH.

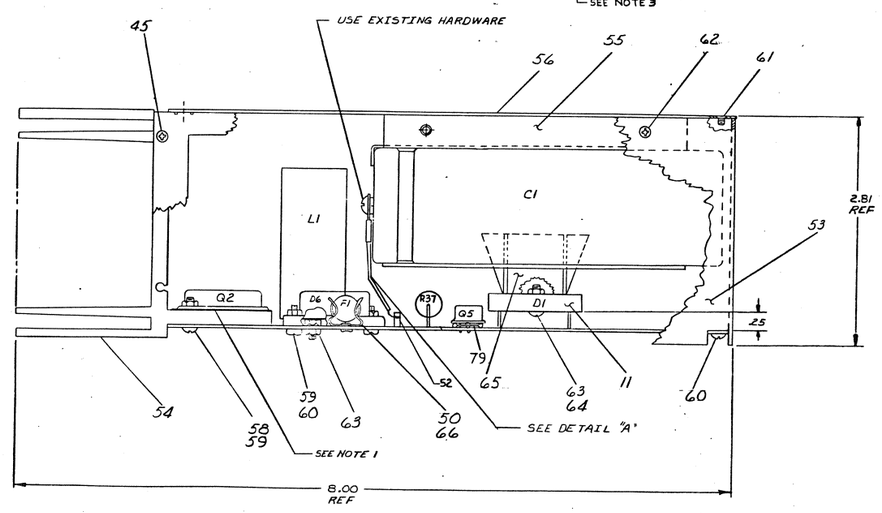

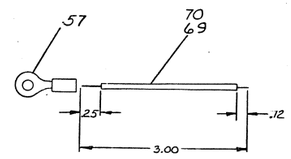

DETAIL "A"
SCALE: NONE
RED WIRE GOES TO POSITIVE TERMINAL
BLK WIRE GOES TO NEGATIVE TERMINAL

DELETED COMPONENTS	
RESISTORS	R9
DIODES	D10, D12

QTY	REF DESIGNATION	DESCRIPTION	PART NO.	ITEM NO.
A/R		INSULATION	9107256-11	90
1	R39	RES 220 1/4W 5%	1300271	89
1	R37	RES. .1 10W 1%	1309108	88
1	R38	RES.1K 1% THERMISTOR	1310071	87
1	C16	CAP. 1000UF 25V	1002781	86
1	Q10	TRANSISTOR MJ900	1510772	85
1	Q9	TRANSISTOR MJ3000	1511349	84
1	C13	CAP. 100 PF 100V ±5% DM	1000016	83
				82
2	Q4, Q14	TRANSISTOR MPS A05	1500765	81
1	D2	DIODE 0003	1100120	80
2	(UNDER Q5 & R2)	TRANSIPAD	9207205	79
1	R31	RES .15Ω 2W 10%	1310147	78
2	C14, C17	CAP, 1000 PF 100V ±5% DM	1000032	77
1	R22	RES 383Ω 1/8W 1%	1305725	76
2	R33, R8	RES 1.78K 1/8W 1%	1302612	75
1	R11	RES 15K 1/4W 5%	1300496	74
1	R20	RES 470R 1/4W 5%	1300316	73
				REF
3		WASHER INSULATOR	9008121	72
A/R		COMPOUND, THERMAL	9008268	71
A/R		WIRE, TINNED STEEL, 19W, 18G (BLK)	9107360-00	70
A/R		WIRE #18AWG, STEL, 19W, 18G (RED)	9107360-22	69
1	J1	MATE-N-LOCK CONN. 8 PIN	1200340	68
8		PIN, SOCKET, MATE-N-LOCK	1209456	67
4		EYELET 06-6-1	9006132	66
1		HEAT SINK BRIDGE RECTIFIER	1210907	65
1		SCR PHL PAN HD 6-32 X ½	9006024-1	64
5		KEPS NUT 8-32 SS	9008185	63
2		SCR PHL FLAT HD 8-32 X 5/16	9006021-2	62
4		SCR PHL FLAT HD 4-40 X 1/4	9000209-2	61
10		SCR PHL PAN HD 4-40 X 3/8	9006011-1	60
6		KEPS NUT 4-40	9006557	59
6		SCR PHL PAN HD 4-40 X ¾	9006013-1	58
4		TERMINAL SOLDERLESS, #10	9007830	57
1		COVER COMP	C-MD-5309760-0-0	56
1		I.S. CAP BRKT	C-IA-5309758-0-0	55
1		HEAT SINK REGULATOR	D-PS-1210737-0-0	54
1		BRACKET REG.	D-IA-5309756-4-0	53
4		SPLIT LUG	9006135	52
1	Q8	TRANSISTOR 2N6028	15-10877	51
2		FUSE CLIP	9007203	50
1	F1	FUSE 10 AMP	90-08838	49
1	L1	REACTOR 170 UHY	16-10849	48
1	E1	INTEGRATED CIRCUIT 723	13-10415	47
6	Q7, Q6, Q11, Q12, Q13	TRANSISTOR MPS A55	15-10706	46
4		SCR PHL FLAT HD #4-40 SELF TAPPING	9005142	45
1	Q5	TRANSISTOR DEC2500	15-03009	44
1	Q2	TRANSISTOR 2N5038	15-10969	43
2	Q1, Q3	TRANSISTOR 2N4920	15-09605	42
2	R17, R21	RES VARIABLE 200Ω ±20% POT	13-10852	41
2	R29, R36	RES 5.1 1/8 5%	13-09422	40
1	R18	RES 237 1/8W 1%	1304657	39
REF		ELECTRICAL SCHEMATIC	E-CS-H754-0-1	38
3	R14, R13, R5	RES 1/8 5% 27	13-01522	37
1	R10	RES 150 1/8 5%	13-00250	36
REF		ASSY/DRILLING HOLE LAYOUT	D-AH-H754-0-5	35
2	R7, R40	RES. 2K 1/4W 5%	1302388	34
2	R6, R19	RES 12K 1/8 5%	13-00488	33
6	R15, R25, R30, R24, R35, R41	RES 100 1/8 5%	13-00229	32
1	R12	RES 68Ω 1/4W 5%	13-00219	31
				30
1	R27	RES 10K 1/8W 1%	1303312	29
1	R32	RES 8.87K 1/4W 5%	13-00444	28
1	R16	RES 287Ω 1/8W 1%	13-05124	27
1	R29	RES 18K 1/8 5%	13-02485	26
1	C11	CAP 2.2 UF 35V 10% S TANT	10-02431	25
1	R4	RES 56.2Ω 64Ω	1311362	24
1	R3	RES 1.5K 5W 5%	13-01897	23
1	R34	RES 47 2W 5%	13-05258	22
1	R28	RES 1.5K 1/8 5%	13-00391	21
2	R1, R2	RES 3.3K 1W 10%	13-02927	20
1	R28	RES 47 1/8 5%	13-00202	19
2	D11, D8	DIODE 1N5624	1110420	18
				17
1	D14	DIODE 752A ZENER	1102808	16
1	D9	DIODE MCR 649 P-2	11-09485	15
1	D7	DIODE 1N3018 24V	11-10956	14
1	D6	DIODE, 20 AMP FAST REC.	11-10115	13
1	D3	DIODE 1N4744 ZENER, 15V	11-05648	12
1	D1	DIODE MDS 3514	11-10114	11
3	D5, D13, D4	DIODE D664	11-20114	10
1	C15	CAP .1UF 100V 20% DISC	1000030	9
1	C3	CAP 2.2K UF 30V 6% AL.EL.	10-10858	8
5	C7, C8, C4, C10, C9	CAP .01UF 50V 20% DISC.	10-01610	7
1	C6	CAP 2700PF 100V 5% DM	10-01637	6
1	C5	CAP 560PF 100V 5% DM	10-00012	5
1	I1	LAMP 28V, 40 MA	12-11239	4
1	C12	CAP .05UF 25V DISC	10-01774	3
2	C1, C2	CAP 5.6 UF 50V 6% AL.EL.	10-01563	2
1		ETCHED CIRCUIT BOARD	501G471	1
		MODULE ECO HISTORY	B-MH-H754-0-6	REF
		X-Y COORDINATE HOLE LOCATION	K-CO-H754-0-4	REF

PARTS LIST

IC TYPE	GND	+5V
GND AND 5V ARE USUALLY PIN 7 AND 14 RESPECTIVELY. EXCEPTIONS ARE STATED ABOVE		

IC PIN LOCATIONS

ITEM NO.	AWG	FROM PT	TO PT

JUMPER LIST

REVISIONS					

This drawing and specifications herein are the property of Digital Equipment Corporation and shall not be reproduced or copied or used in whole or in part as the basis for the manufacture or sale of items without written permission.

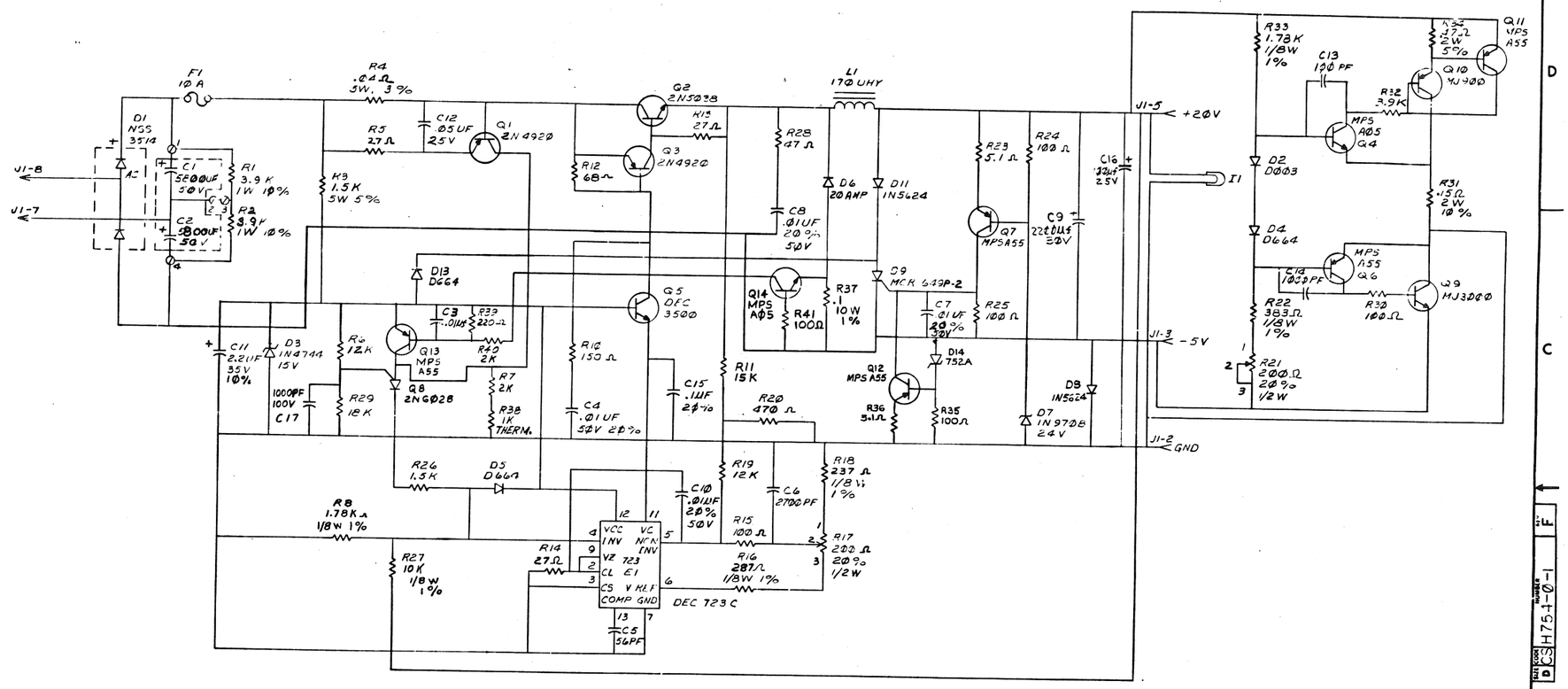

REV	CHANGE NO	CH
F	H754-005	

REVISIONS

DRAWING 40-423 7649

DEC FORM NO DRD 107-B

FIRST USED ON OPTION-MODEL	QTY.	DESCRIPTION	PART NO.	ITEM NO.
H754		PARTS LIST		

UNLESS OTHERWISE SPECIFIED DIMENSION IN INCHES TOLERANCES

DECIMALS	ANGLES
.XXX ± .005	± 0° 30'
.XX ± .02	
.X ± .1	

REMOVE BURRS AND BREAK SHARP CORNERS SURFACE QUALITY ✓

MATERIAL —

FINISH —

DRN.		DATE
CHK'D		DATE
ENG.		DATE
PROJ. ENG.		DATE
PROD.		DATE
NEXT HIGHER ASSY		
SCALE		
SHEET OF		

digital EQUIPMENT CORPORATION MAYNARD MASSACHUSETTS

TITLE +20 VOLT REGULATOR

SIZE	CODE	NUMBER	REV
D	CS	H754-0-1	F

DIST

DCS H754-0-1

This drawing and specifications, herein, are the property of Digital Equipment Corporation and shall not be reproduced or copied or used in whole or in part as the basis for manufacture or sale of items without written permission.

WIRE TABLE

ITEM NO.	DESCRIPTION AWG	COLOR	FROM POINT	FROM CONNECTION	FROM TERM	TO POINT	TO CONNECTION	TO TERM	SIGNAL
5	14 TWP	RED	3	P3-10	SOLD	15	P1-1	3	+5V
		BLK	4	P3-8	SOLD	14	P1-7	3	GND
9	14	GRY	5	P3-4	SOLD	16	P1-2	3	-15V
6	14 TWP	BLK	1	P3-12	SOLD	13	P1-9	3	GND
		BLU	2	P3-11	SOLD	12	P1-13	3	-15V
8	18	BRN	8	P3-1	SOLD	11	P2-2	3	LTc
7	18 TWP	VIO	6	P3-3	SOLD	9	P2-3	3	DcLo
		YEL	7	P3-2	SOLD	10	P2-4	3	AcLo
11	22	-	-	P3-13	SOLD	-	P3-14	SOLD	DcLo
11	22	-	-	P3-15	SOLD	-	P3-16	SOLD	AcLo

NOTES:
1. USE TIE WRAPS (X) ITEM #4 APPROXIMATELY EVERY THREE (3) INCHES WHEN NECESSARY AND AT EVERY BREAKOUT POINT.
2. DOT (•) INDICATES NAIL LOCATIONS FOR ASSEMBLY USE ONLY. COVER NAILS WITH SHRINK TUBING TO PREVENT CUTTING HARNESS.
3. USE CONN BRKT C-MD-9305761-H6-0 MOUNT WITH WOOD SCREWS. USE MATING CONN 1209350-15.
4. USE CONN BRKT C-MD-9305761-H6-0 MOUNT WITH WOOD SCREWS. USE MATING CONN 1209350-06
5. USE CONN. HOLD DOWN B-MD-9305767-0-0 WITH PLATE B-MD-9305767-0-1, USE TAPE DEC #9008734 & CONN HBO7 DEC# (1209123) REMOVE PINS & FLANGES AS SHOWN IN DETAIL "A". MOUNT WITH WOOD SCREWS.

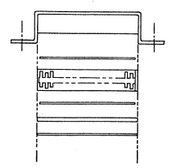

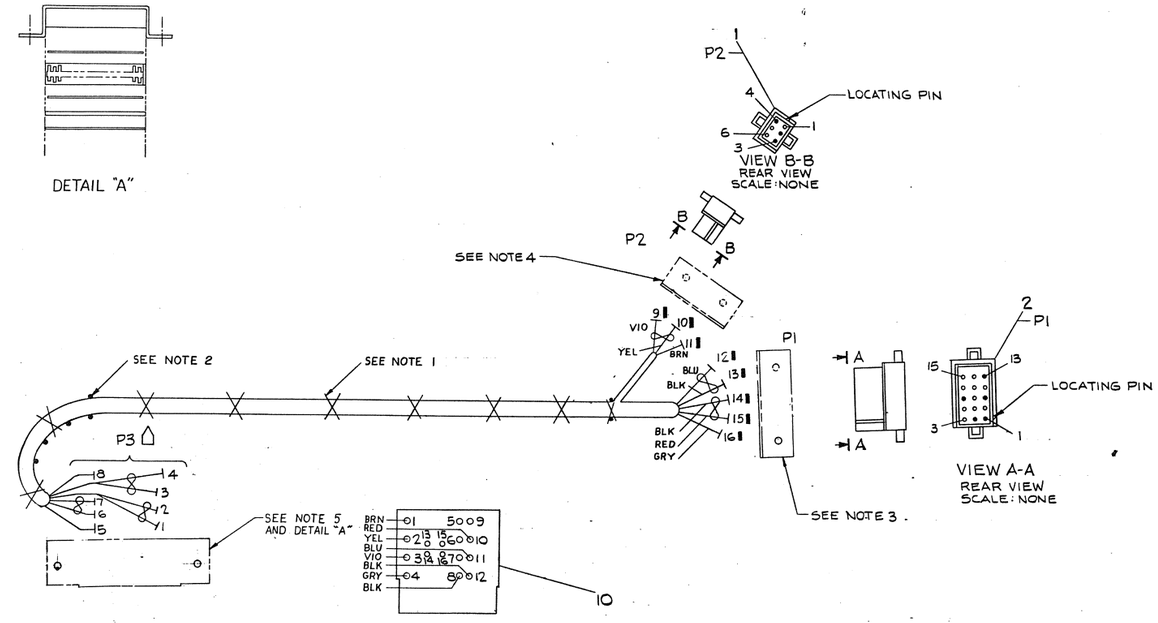

0 IN. SCALE 6 IN. 12 IN.

DO NOT REDUCE
DO NOT BUILD FROM REDUCED PRINT

	QTY.	DESCRIPTION	PART NO.	ITEM NO.
	A/R	BUSS WIRE #22 AWG	9107560-01	11
	1	POWER CONN	G772	10
	A/R	WIRE #14 AWG GRY	9107370-88	9
	A/R	WIRE #18 AWG BRN	9107360-11	8
	A/R	WIRE #18 TWP YEL/VIO	9107430-47	7
	A/R	WIRE #14 TWP BLK/BLU	9107440-06	6
	A/R	WIRE #14 TWP BLK/RED	9107440-02	5
X	A/R	WRAP, TIE	9007031	4
■	8	PIN, MALE	1209378-00	3
	1	HOUSING, CONN. 15 PIN	1209351-15	2
SYM	1	HOUSING, CONN. 6 PIN	1209351-06	1

PARTS LIST

FIRST USED ON OPTION/MODEL

UNLESS OTHERWISE SPECIFIED DIMENSION IN INCHES. TOLERANCES
DECIMALS .XXX ± .005 .XX ± .02 .X ± .1
ANGLES ±0° 30'
REMOVE BURRS AND BREAK SHARP CORNERS. SURFACE QUALITY ✓

MATERIAL: SEE PARTS LIST
FINISH: #

DRN. DATE
CHK'D DATE
ENG. DATE
PROJ. ENG. DATE
PROD. DATE
NEXT HIGHER ASSY.
SCALE 1/1
SHEET 1 OF 1

REV. | CHANGE NO. | REVISIONS | CHK.

digital EQUIPMENT CORPORATION
MAYNARD, MASSACHUSETTS

TITLE: G772 SYSTEM UNIT HARNESS

SIZE	CODE	NUMBER	REV.
E	A	7009562-0-0	

DIST.

DEC FORM NO. BPR 3800

7009562-0-0 REV A

DIGITAL EQUIPMENT CORPORATION
MAYNARD, MASSACHUSETTS

ACCESSORY LIST

MADE BY J. Hornan DATE 6-15-72	CHECKED J. Rogers DATE 6-15-72	SECTION
ENG DATE 6/20/72	PROD Jack Hornan DATE 6-20-72	ISSUED SECT.

LEGEND

- D DOCUMENT
- DN DOCUMENT CHANGE NOTICE
- PA PAPER TAPE ASCII
- PB PAPER TAPE BINARY
- PM PAPER TAPE READ-IN-MODE

ITEM NO.	DWG NO./PART NO.	DESCRIPTION	QUANTITY/VARIATION Basic								KIT CHECK BY ____ DATE ____	INSTALLATION CHECK BY ____ DATE ____
	Lib Kit 11-Bas 45-B-K	System Software Kit	1									
	Dec 11-H45B-D	11/45 Systems and installation Manual	1									
	112-01071-1854-D-09-25	11 Peripherals and interfacing Handbook	1									
	112-01071-1876-D-09	11/45 Processor Handbook	1									
	Dec 11-HKBA-D	KB11 Maintenance Manual	1									
	B-DD-11/45-0	PDP-11/45 Systems Eng. Drawings	1									
		Dec Supplies List	1									
		Log Book	1									
		PDP-11 Instruction Card	1									
		H960C Cab Filter	1									
	9007221	AGC 5 A Fuse	5									
	9007226	AGC 15A Fuse	5									
	9009039	Fuse 2/10A SB	5									
		Key on off Switch	2									
	7008855	POWER CABLE, SYSTEM UNIT	3									

TITLE	ASSY. NO.	SIZE	CODE	NUMBER	REV.	ECO NO
Central Processor	SHEET 1 OF 1	A	AL	11/45 - 003	A	11/45-00038
		DIST.				

DEC 16-(325)-1075-N172 DRA 121