PDP-11/45
system
engineering drawings

R. Tinga. 23786.

digital equipment corporation · maynard, massachusetts

digital EQUIPMENT CORPORATION MAYNARD MASSACHUSETTS

DRAWING DIRECTORY

"THIS DRAWING AND SPECIFICATIONS, HEREIN, ARE THE PROPERTY OF DIGITAL EQUIPMENT CORPORATION AND SHALL NOT BE REPRODUCED OR COPIED OR USED IN WHOLE OR IN PART AS THE BASIS FOR THE MANUFACTURE OR SALE OF ITEMS WITHOUT WRITTEN PERMISSION. COPYRIGHT © , DIGITAL EQUIPMENT CORPORATION"

CUSTOMER PRINT SET INDEX

SEQUENCE	
DRAWING DIRECTORY	B-DD-11/45-0 (SHT. ONE ONLY)
CONSOLE PHYSICAL LAYOUT	E-IA-5409684-0-0
CIRCUIT SCHEMATIC	D-CS-5409684-0-1
DRAWING DIRECTORY	B-DD-KB11-0 (SHT. ONE ONLY)
POWER SYSTEM CONFIGURATION	D-IC-11/45-0-1
11/45 BACK PANEL PC BOARD	D-IC-11/45-0-2
WIRE LIST	K-WL-7009540-0-2
DRAWING DIRECTORY	B-DD-861-0 (SHT. ONE ONLY)
DRAWING DIRECTORY	B-DD-H742-0 (SHT. ONE ONLY)
DRAWING DIRECTORY	B-DD-H744-0 (SHT. ONE ONLY)
DRAWING DIRECTORY	B-DD-H745-0 (SHT. ONE ONLY)
DRAWING DIRECTORY	B-DD-H746-0 (SHT. ONE ONLY)
CIRCUIT SCHEMATIC	E-CS-H754-0-1
G772-OPTION HARNESS	E-IA-7009562-0-0
ACCESSORY LIST	A-AL-11/45-0-3
ARRANGEMENT DRAWING	D-AR-11/45-0-4
ARRANGEMENT PARTS LIST	C-PL-11/45-0-4
DRAWING DIRECTORY	B-DD-DL11-1

SEQUENCE

THIS IS PRINT SET

UNIT VARIATIONS

VAR	TITLE	PRINT SET 11/45-1			
11/45-CA	BASIC ASSY (PDP-11/45) 115V	X			
11/45-CB	BASIC ASSY (PDP-11/45) 230V	X			
11/45-CC	BASIC ASSY + LA3Ø 115V	X			
11/45-CD	BASIC ASSY + LA3Ø 230V	X			
11/45-CE	BASIC ASSY + VTØ5B 115V	X			
11/45-CF	BASIC ASSY + VTØ5B 230V	X			
11/45-CH	BASIC ASSY + LA3Ø 115V	X			
11/45-CJ	BASIC ASSY + LA3Ø 230V	X			
11/45-CK	BASIC ASSY + VTØ5B 115V	X			
11/45-CL	BASIC ASSY + VTØ5B 230V	X			
11/45-FA	BASIC ASSY 115V	X			
11/45-FB	BASIC ASSY 230V	X			
11/45-GA	BASIC ASSY + LA3Ø 115V	X			
11/45-GB	BASIC ASSY + LA3Ø 230V	X			
11/45-GE	BASIC ASSY + LA3Ø 115V		X		
11/45-GF	BASIC ASSY + LA3Ø 230V	X			

REVISIONS		
DATE	CHG. NO.	REV
3/74	11/45-57	Y
6/74	11/45-58	Z

USED ON OPTION/MODEL	
PDP-11	

SHEET 1 OF 4

DRN. R. COOK	DATE 4/72	TITLE BASIC ASSY (PDP11/45)
CHK'D. R. COOK	DATE 4/72	
PROJ ENG. B. DELAGI	DATE 4/72	
PROD. A. HIRSCH	DATE 5/72	SIZE B · CODE DD · NUMBER 11/45-0 · REV Z
FIELD SERV. ART ZINS	DATE 5/72	DIST

DEC 16-13251-1062-1A-R972

DRB 106

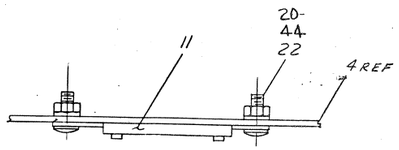

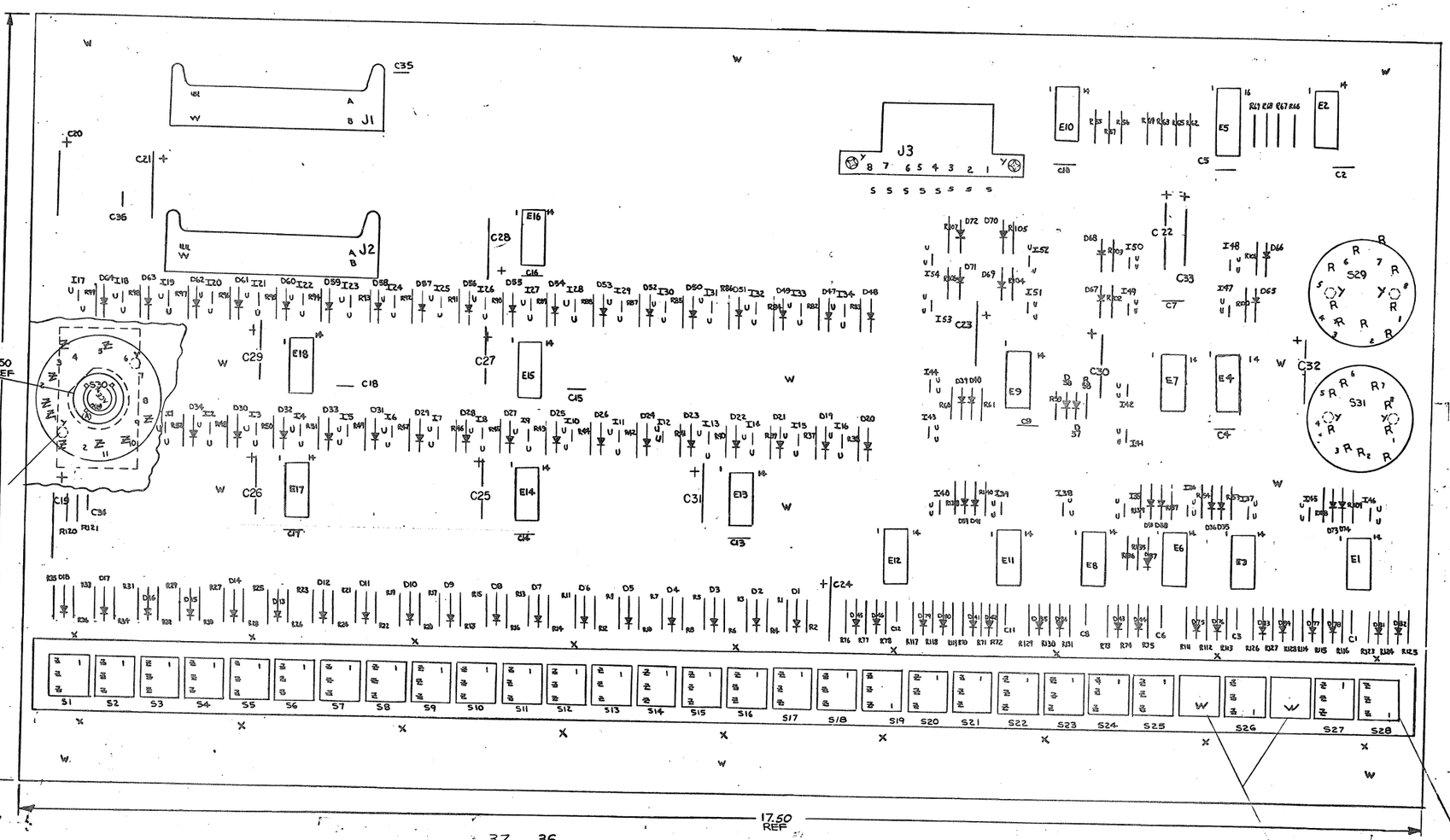

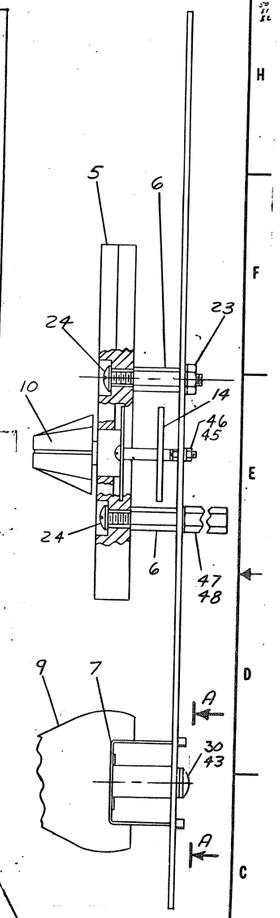

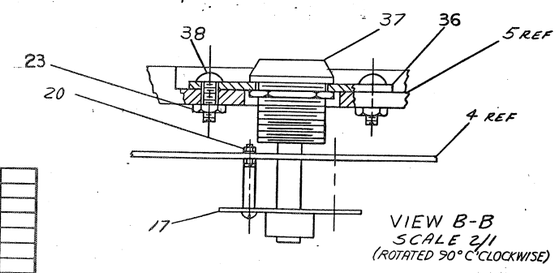

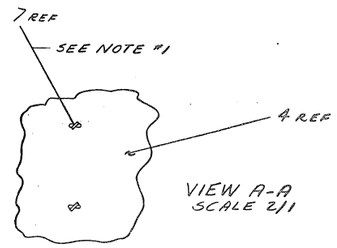

This drawing and specifications, herein, are the property of Digital Equipment Corporation and shall not be reproduced or copied or used in whole or in part as the basis for the manufacture or sale of items without written permission.

KNOB LOCATIONS

ITEM NO.	REFERENCE DESIGNATIONS
8	S1-S3,S7-S9,S13-S15, S20,S22,S24,S26,S28
40	S4-S6,S10-S12,S16-S18, S21,S23,S25,S27
41	S19

NOTES CONT

3. IN ORDER TO GET THE PROPER ALIGNMENT BETWEEN ROTARY SWITCH #17 AND POWER LOCK #37, MOUNT ITEM #17 ON P.C. BOARD AND TURN SHAFT C'CLOCKWISE (LEFT) TO STOP. MOUNT ITEM #37 TO SUPPORT BRACKET ITEM #5 WITH 'D' HOLE IN POSITION INDICATED. ROTATE KEY POSITION INDICATED AS "B" OF ITEM #37 TO LINE UP WITH KEY POSITION INDICATED AS "A" OF ITEM #37.

20-
44
22
11
4 REF

NOTES

1. AFTER ASSEMBLING ITEM #7 TO ITEM #4, THE TABS OF ITEM #7 ARE TO BE TWISTED AS SHOWN IN VIEW A-A
2. ON S1-S19, S26, S28, THE SWITCH ARM IS TO FLIP UP.
THE SWITCH ARM TO FLIP DOWN ON 20-25/27.

J1
J2
J3
C35
C36
C20
C21
C2
C5
C18
C22
C33
C7
C4
C9
C30
C23
C32
C28
C16
C29
C27
C15
C26
C25
C31
C13
C14
C17
C19
C34
C24
E1
E2
E3
E4
E5
E6
E7
E8
E9
E10
E11
E12
E13
E14
E15
E16
E17
E18
S29
S31
S30
S1
S2
S3
S4
S5
S6
S7
S8
S9
S10
S11
S12
S13
S14
S15
S16
S17
S18
S19
S20
S21
S22
S23
S24
S25
S26
S27
S28
B
B
TOP VIEW-
37 REF
SEE NOTE
3
9.50
REF
REF 36
17.50
REF

5
6
23
24
14
46
45
10
24
6
47
48
9
7
A
30
43
A
FOR INFORMATION
ON COLOR OF KNOB
SEE TABLE
9

38
37
36
5 REF
23
20
4 REF
17

VIEW B-B
SCALE 2/1
(ROTATED 90° C'CLOCKWISE)

7 REF
SEE NOTE #1
4 REF

VIEW A-A
SCALE 2/1

SEE SHEET 2 FOR PARTS LIST

IC TYPE	GND	+5V

GND AND 5V ARE USUALLY PIN 7 AND 14 RESPECTIVELY EXCEPTIONS ARE STATED ABOVE

IC PIN LOCATIONS

ITEM NO.	AWG	FROM PT	TO PT

JUMPER LIST

REV	CHANGE NO.			CHK
E	5409684-00004	H. Dinsmore 2/23/73	J. SWANSON	3/2/73
D	5409684-00003	7-31-72	J. SWANSON	8-1-72
C	5409684-00002	6/11/72	J. SWANSON	6/6/72
B	5409684-00001	4-18-72	J. SWANSON	4-19-72
A	ORIGINATED			

REVISIONS

DEC NO.	EIA NO.	DEC NO.	EIA NO.

SEMICONDUCTOR CONVERSION CHART

QTY	REF DESIGNATION	DESCRIPTION	PART NO.	ITEM NO.

PARTS LIST

ETCH BOARD REV D

	DATE
DRN.	1-24-72
CHK'D	2/3/72
ENG.	3/29/72
PROJ. ENG.	3/28/72
PROD.	3-30-72

NEXT HIGHER ASSY E-11A-KB11-A-0

digital EQUIPMENT CORPORATION MAYNARD, MASSACHUSETTS

TITLE ETCH BOARD ASSY (11/45 CONSOLE)

SIZE	CODE	NUMBER	REV.
E	IA	5409684-0-0	E

SCALE 2/1
SHEET 1 OF 2
DIST

E IA 5409684-0-0 E

This drawing and specifications, herein, are the property of Digital Equipment Corporation and shall not be reproduced or copied or used in whole or in part as the basis for the manufacture or sale of items without written permission.

QTY	REF DESIGNATION	DESCRIPTION	PART NO.	ITEM NO.
1	R120	RES. 68 1/4W 10%	1300221	51
1	R121	RES. 56 1/4W 10%	1301429	50
				49
3		LOCKWASHER INT TOOTH #6	9006633	48
3		SPACER .25 A.F. #6-32X.88L6	9006861	47
4		LOCKWASHER #2 INT TOOTH	9006631	46
4		NUT, HEX #2-56	9006555	45
2		SCR. PHL HD PAN #4-40 X .38	9006011-1	44
2		LOCKWASHER #8 INT TOOTH	9006634	43
REF		ASSY/DRILLING HOLE LAYOUT	E-MH-5409684-0-3	42
1		KNOB, SWITCH GRAY	D-PS-1210736-3-0	41
13		KNOB, SWITCH MAGENTA	D-PS-1210736-2-0	40
1	E8	I.C. DEC 7404	1309686	39
2		SCR. PHL PAN HD #6-32X.38L6	9006022-1	38
1		POWER LOCK	1210734	37
1		STRAP, LOCK MTG	B-1A-7409984-00	36
1	E9	I.C. MC 3001	1909514	35
7	E7, E13-E18	I.C DEC 7416	1909928	34
1	E5	I.C DEC 9318	1910454	33
2	E2, E4	I.C DEC 7417	1909929	32
6	E1,E3,E6,E10-E12	I.C DEC 7400	1905575	31
2		8-32 X1/4 SELF TAPPING SCR.	9008143	30
54	R37-R54, R58-R61, R82-R109, R137-R140	RES. 220Ω 1/4W, 10%	1300275	29
76	R1-R36, R55-R57, R62-R78, R141-R179, R123-R131, R135, R136	RES. 2.2K 1/4W, 10%	1300418	28
15	C19-C33	CAP. 6.8 µf 35V 20% STANT	1000067	27
21	C1-C18, C34-C36	CAP. .01 µf 100V 20%	1001610	26
91	D1-D91	DIODE DG64	1100117	25
6		SCR. PHL PAN HD #6-32X.50L6	9006024-1	24
5		NUT, KEPS #6-32	9006360	23
2		WASHER, FIBER H.H.SMITH 2162	9006673	22
4		NUT, NYLON #4-40	9007992	20
108		LAMP SOCKET	9007812	19
54	I1-I54	LAMP 2309G HUDSON BLUE	1209219	18
1	S36	SWITCH ROTORY (LEDEX) 3 POS	1210753	17
8	S19-S22, S25-S28	SWITCH SPDT MOMENTARY (C&K)	1210841	16
20	S1-S18, S23, S24	SWITCH SPDT (C&K)	1210840	15
2	S29, S31	SWITCH ROTARY (LEDEX) 8 POS	1210775	14
2	J1, J2	CONN. RIGHT ANGLE HEADER	1209991	13
8		PIN SOCKET AMP 61320-1	1209456	12
1	J3	PIN HOUSING	1209390-00	11
2		KNOB, FUNCTION BLK	1210773	10
2		KNOB, DUMMY GRAY	D-PS-1210825-0-0	9
14		KNOB, SWITCH ROSE	D-PS-1210796-1-0	8
1		SUPPORT, SWITCH	D-MD-7409270-1-0	7
6		STANDOFF, MALE/FEMALE 6-32	9009120-2	6
1		SUPPORT, INDICATOR PANEL	D-MD-7409985-0-0	5
1		ETCHED CIRCUIT BOARD	5009683	4
REF		MODULE ECO HISTORY	B-MH-5409684-0-6	3
REF		CIRCUIT SCHEMATIC	D-CS-5409684-0-1	2
REF		X-Y COORDINATE HOLE LOC	K-CO-5409684-0-4	1

PARTS LIST

~~ETCH BOARD REV~~

IC TYPE	GND	+5V
DEC 9318	8	16

GND AND 5V ARE USUALLY PIN 7 AND 14 RESPECTIVELY EXCEPTIONS ARE STATED ABOVE

IC PIN LOCATIONS

ITEM NO.	AWG	FROM PT	TO PT

JUMPER LIST

DEC NO.	EIA NO.	DEC NO.	EIA NO.
DG64	1N3606		

SEMICONDUCTOR CONVERSION CHART

CHK	CHANGE NO.	REV

REVISIONS

DRN. DATE 1/24/72
CHK'D. DATE 2/3/72
ENG. DATE 2/7/72
PROJ. ENG. DATE 2/14/72
PROD. DATE
NEXT HIGHER ASSY E-UA-K011-A-4
SCALE 2/1
SHEET 2 OF 2

DIGITAL EQUIPMENT CORPORATION MAYNARD, MASSACHUSETTS

TITLE ETCH BOARD ASSY (11/45 CONSOLE)

SIZE E CODE IA NUMBER 5409684-0-0 REV. E

DIST.

DEC FORM NO. DRE 104

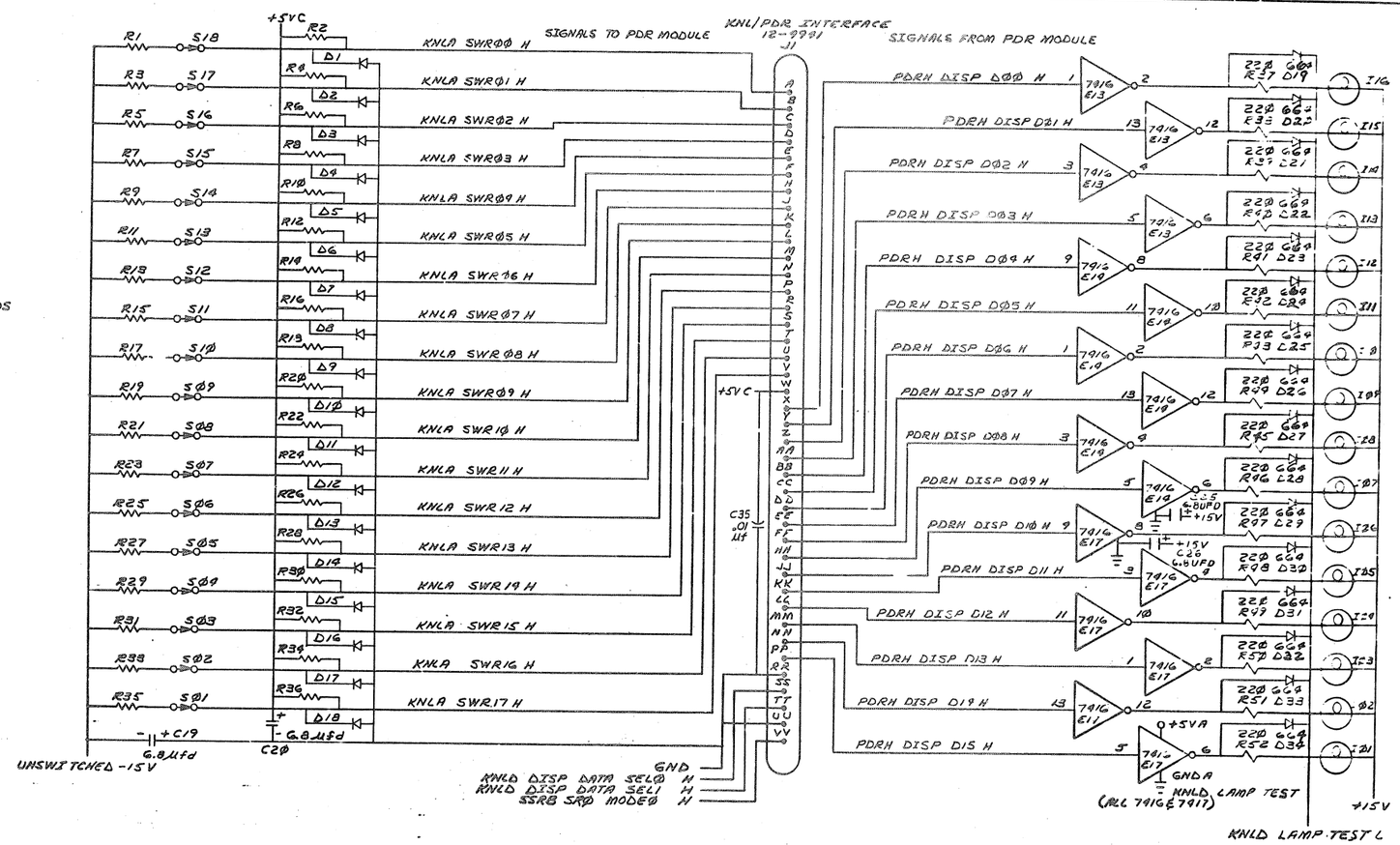

This drawing and specifications, herein, are the property of Digital Equipment Corporation and shall not be reproduced or copied or used in whole or in part as the basis for the manufacture or sale of items without written permission.

"SWITCH REGISTER" SWITCHES
SHOWN IN LOGICAL "0" STATE (DOWN)

NOTES:
1. CONTROL LOGIC AND DISPLAY GROUNDS MUST BE KEPT SEPARATE.
2. ALL RESISTORS ARE 2.2K UNLESS MARKED OTHERWISE.
3. ALL UNMARKED DIODES ARE D664

KNL/PDR INTERFACE
12-9991
J1
SIGNALS TO PDR MODULE
SIGNALS FROM PDR MODULE
+5VC
R1 S18 KNLA SWR00 H
R3 S17 KNLA SWR01 H
R5 S16 KNLA SWR02 H
R7 S15 KNLA SWR03 H
R9 S14 KNLA SWR04 H
R11 S13 KNLA SWR05 H
R13 S12 KNLA SWR06 H
R15 S11 KNLA SWR07 H
R17 S10 KNLA SWR08 H
R19 S09 KNLA SWR09 H
R21 S08 KNLA SWR10 H
R23 S07 KNLA SWR11 H
R25 S06 KNLA SWR12 H
R27 S05 KNLA SWR13 H
R29 S04 KNLA SWR14 H
R31 S03 KNLA SWR15 H
R33 S02 KNLA SWR16 H
R35 S01 KNLA SWR17 H
R2 R4 R6 R8 R10 R12 R14 R16 R18 R20 R22 R24 R26 R28 R30 R32 R34 R36
D1 D2 D3 D4 D5 D6 D7 D8 D9 D10 D11 D12 D13 D14 D15 D16 D17 D18
C19 6.8μfd
C20 6.8μfd
UNSWITCHED -15V
GND
KNLD DISP DATA SEL0 H
KNLD DISP DATA SEL1 H
SSRB SR0 MODE0 H
+5VC
C35 .01 μf
A B C D E F H J K L M N P R S T U V W X Y Z AA BB CC DD EE FF HH JJ KK LL MM NN PP RR SS TT UU VV
PDRH DISP D00 H
PDRH DISP D01 H
PDRH DISP D02 H
PDRH DISP D03 H
PDRH DISP D04 H
PDRH DISP D05 H
PDRH DISP D06 H
PDRH DISP D07 H
PDRH DISP D08 H
PDRH DISP D09 H
PDRH DISP D10 H
PDRH DISP D11 H
PDRH DISP D12 H
PDRH DISP D13 H
PDRH DISP D14 H
PDRH DISP D15 H
7416 E13
7416 E14
7416 E17
7416 E11
C25 6.8UFD +15V
C26 6.8UFD +15V
+5VA
GNDA
KNLD LAMP TEST
(ALL 7416 & 7417)
220 664
R37 D19
R38 D20
R39 D21
R40 D22
R41 D23
R42 D24
R43 D25
R44 D26
R45 D27
R46 D28
R47 D29
R48 D30
R49 D31
R50 D32
R51 D33
R52 D34
I16 I15 I14 I13 I12 I11 I10 I09 I08 I07 I06 I05 I04 I03 I02 I01
+15V
KNLD LAMP TEST L

REVISIONS		
CHK	CHANGE NO	REV
	5409684-00001	B
B. J. Haile 4-14-72		
J. SWANSON		
4-19-72	5409684-00002	C
5/31/72		
J. SWANSON		
6/6/72	5409684-00003	D
B. J. Haile 7-31-72		
J. SWANSON		
8-1-72	5409684-00004	E
H. Stenmore 2/23/73		
J. SWANSON		
3/12/73		

DEC FORM NO

FIRST USED ON OPTION/MODEL	QTY.	DESCRIPTION	PART NO.	ITEM NO
11/45	PARTS LIST			

UNLESS OTHERWISE SPECIFIED DIMENSION IN INCHES. TOLERANCES	DRN.	DATE 6-16-71	digital EQUIPMENT CORPORATION MAYNARD MASSACHUSETTS
DECIMALS .XXX = .005 .XX = .02 .X = .1 / ANGLES ±0° 30'	CHK'D	DATE	TITLE 11/45 CONSOLE BOARD KNLA
REMOVE BURRS AND BREAK SHARP CORNERS SURFACE QUALITY ✓	ENG.	DATE	
	PROJ. ENG.	DATE 2/29/72	
	PROD.	DATE	
MATERIAL	NEXT HIGHER ASSY. 8-DD-11/45-0		SIZE D CODE CS NUMBER 5409684-0-1 REV E
FINISH	SCALE		
	SHEET 1 OF 4		DIST.

D CS 5409684-0-1 E

This drawing and specifications herein are the property of Digital Equipment Corporation and shall not be reproduced or copied or used in whole or in part as the basis for the manufacture or sale of items without written permission.

NOTES:
CONTROL SWITCHES ARE SHOWN IN THEIR "NORMAL" OR NON OPERATING POSITION. SWITCHES WITH ARROWS POINTING UP ARE PUSHED DOWN TO OPERATE. THOSE WITH ARROWS DOWN ARE LIFTED TO OPERATE.
CONTROL SWITCHES S25 THRU S28, S19 THRU S22 ARE MOMENTARY SPDT.
ALL 7400 ON SHEETS 1 THRU 3 ARE TO BE CONNECTED TO +5VB AND FUNCTION SW GND RETURN.

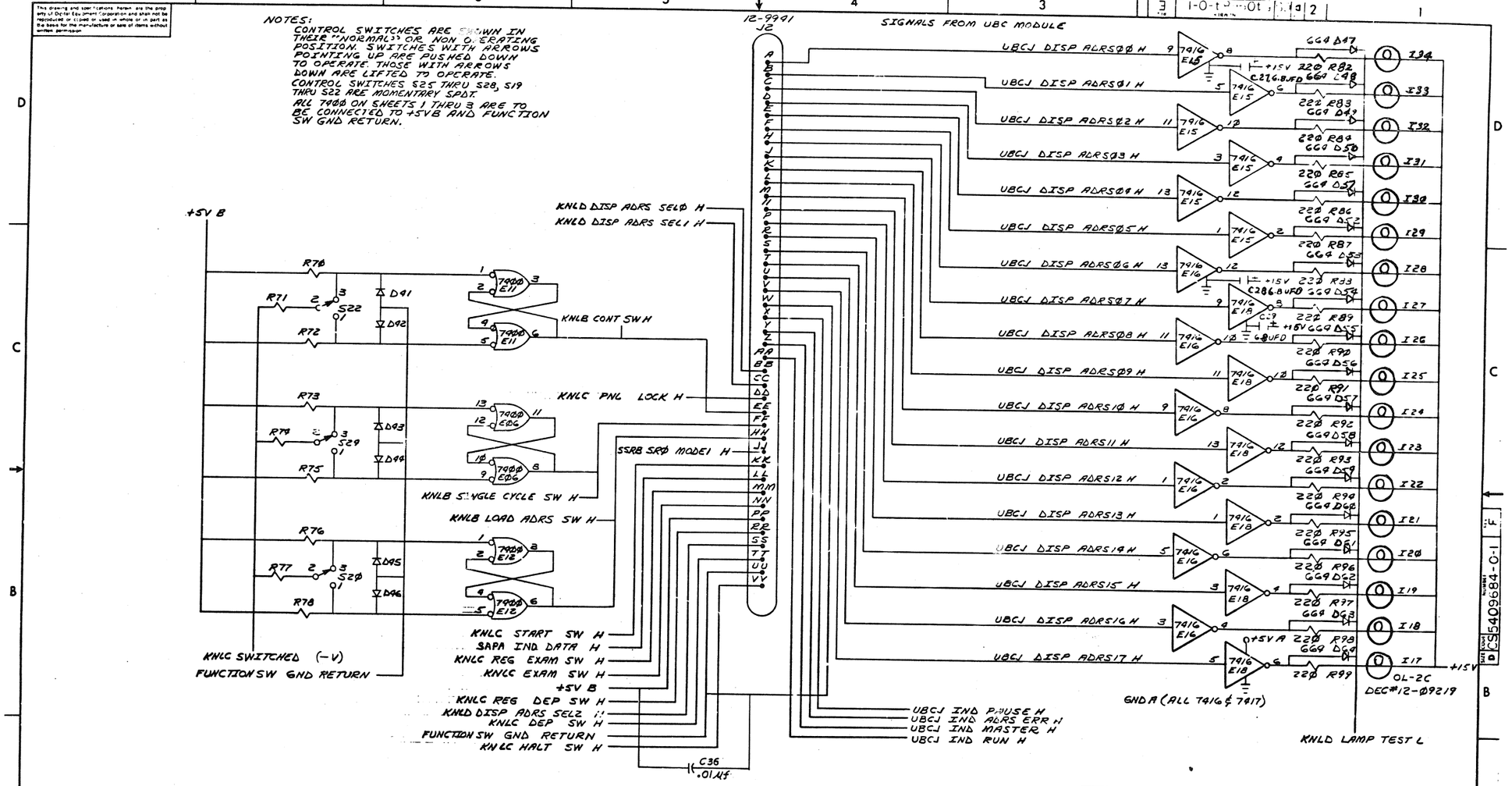

FIRST USED ON OPTION/MODEL	QTY	DESCRIPTION	PART NO.	ITEM NO.
11/45		PARTS LIST		

UNLESS OTHERWISE SPECIFIED DIMENSION IN INCHES. TOLERANCES
DECIMALS .XXX = .005 .XX = .02 .X = .1
ANGLES ±0° 30'
REMOVE BURRS AND BREAK SHARP CORNERS SURFACE QUALITY ✓
MATERIAL
FINISH

DRN. DATE
CHK'D DATE 7/24/72
ENG DATE
PROJ. ENG DATE 3/22/72
PROD. DATE

digital EQUIPMENT CORPORATION MAYNARD MASSACHUSETTS

TITLE 11/45 CONSOLE BOARD KNLB

NEXT HIGHER ASSY. 8-DD-11/45-0
SCALE NONE
SHEET 2 OF 4

SIZE	CODE	NUMBER	REV.
D	CS	5409684-0-1	E

DIST

DRAWING 40-523 19840 REVISIONS REV CHANGE NO CHK
DIC FORM NO ORD 102-B

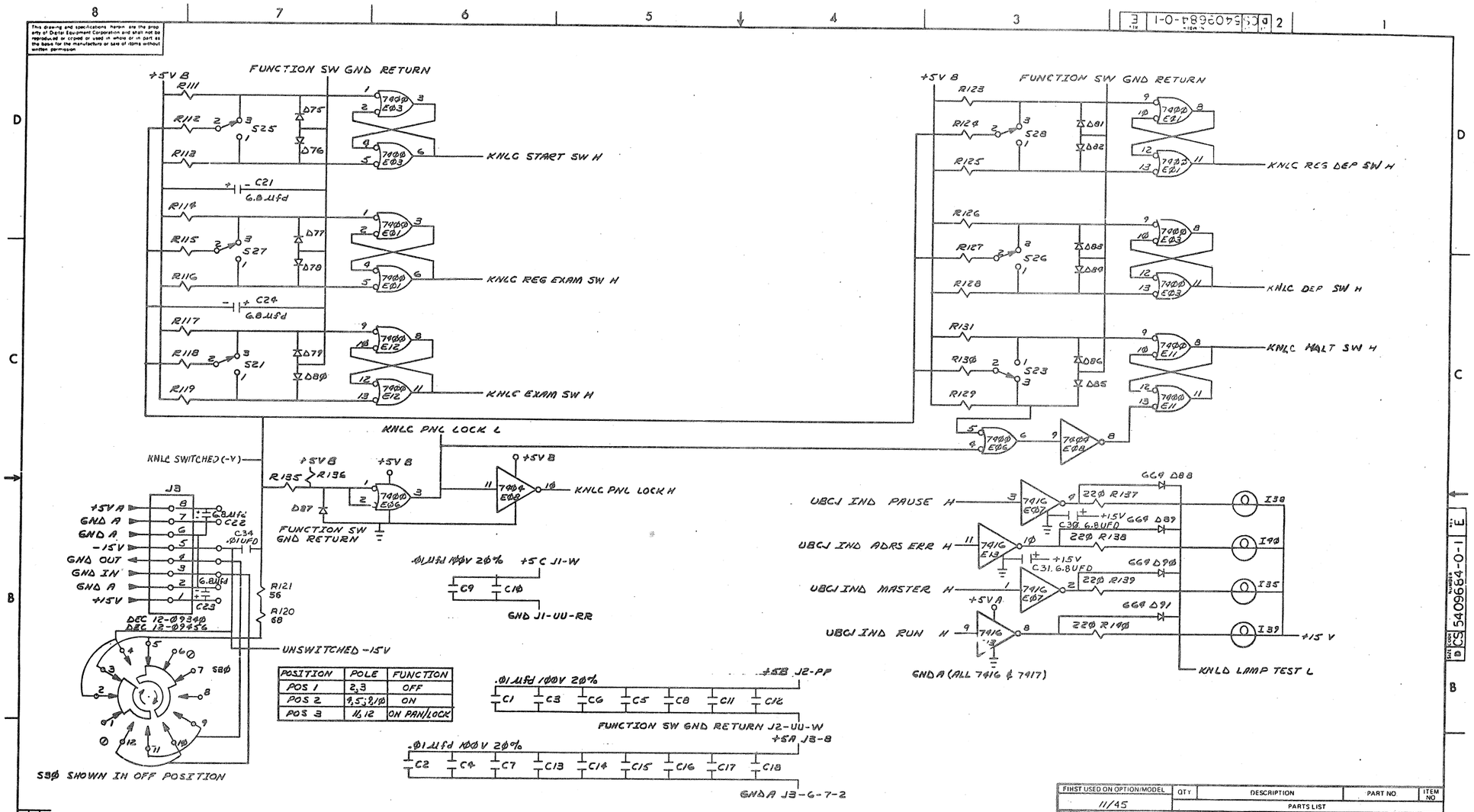

This drawing and specifications herein are the property of Digital Equipment Corporation and shall not be reproduced or copied or used in whole or in part as the basis for the manufacture or sale of items without written permission.

FUNCTION SW GND RETURN
+5V B
R111
R112
R113
R114
R115
R116
R117
R118
R119
S25
S27
S21
D75
D76
D77
D78
D79
D80
C21 6.8µfd
C24 6.8µfd
7400 E03
7400 E01
7400 E12
KNLC START SW H
KNLC REG EXAM SW H
KNLC EXAM SW H
R123
R124
R125
R126
R127
R128
R129
R130
R131
S28
S26
S23
D81
D82
D83
D84
D85
D86
7400 E01
7400 E03
7400 E11
KNLC REG DEP SW H
KNLC DEP SW H
KNLC HALT SW H
KNLC PNL LOCK L
7400 E06
7404 E08
KNLC SWITCHED (-V)
+5V B
R135
R136
D87
7400 E06
7404 E08
KNLC PNL LOCK H
FUNCTION SW GND RETURN
J3
+5V A
GND A
GND A
-15V
GND OUT
GND IN
GND A
+15V
6.8µfd C22
C34 .01UFD
6.8µfd C23
DEC 12-09340
DEC 12-09456
R121 56
R120 68
UNSWITCHED -15V
S30
S30 SHOWN IN OFF POSITION
.01µfd 100V 20%
+5C J1-W
C9
C10
GND J1-UU-RR
UBCJ IND PAUSE H
UBCJ IND ADRS ERR H
UBCJ IND MASTER H
UBCJ IND RUN H
7416 E07
7416 E13
+15V
C30 6.8UFD
C31 6.8UFD
+5V A
GND A (ALL 7416 & 7417)
220 R137
220 R138
220 R139
220 R140
669 D88
669 D89
669 D90
669 D91
I38
I40
I35
I39
+15 V
KNLD LAMP TEST L
.01µfd 100V 20%
+5B J2-PP
C1
C3
C6
C5
C8
C11
C12
FUNCTION SW GND RETURN J2-UU-W
+5A J3-8
.01µfd 100V 20%
C2
C4
C7
C13
C14
C15
C16
C17
C18
GND A J3-6-7-2

POSITION	POLE	FUNCTION
POS 1	2,3	OFF
POS 2	4,5;9,10	ON
POS 3	11,12	ON PAN/LOCK

REVISIONS
CHK | CHANGE NO | REV

FIRST USED ON OPTION/MODEL	QTY	DESCRIPTION	PART NO	ITEM NO
11/45	PARTS LIST			

UNLESS OTHERWISE SPECIFIED DIMENSION IN INCHES.
TOLERANCES

DECIMALS	ANGLES
.XXX = .005 .XX = .02 .X = .1	±0° 30'

REMOVE BURRS AND BREAK SHARP CORNERS SURFACE QUALITY ✓

MATERIAL

FINISH

DRN Akibert DATE 12-…
CHK'D M Cook DATE 3/21/72
ENG DATE 3/29/72
PROJ. ENG. DATE 3/28/72
PROD. DATE

NEXT HIGHER ASSY B-DD-11/45-0

SCALE

SHEET 3 OF 4

DIGITAL EQUIPMENT CORPORATION
MAYNARD MASSACHUSETTS

TITLE 11/45 CONSOLE BOARD
KNLC

SIZE D CODE CS NUMBER 5409684-0-1 REV E

DIST

This drawing and specifications herein are the property of Digital Equipment Corporation and shall not be reproduced or copied or used in whole or in part as the basis for the manufacture or sale of items without written permission.

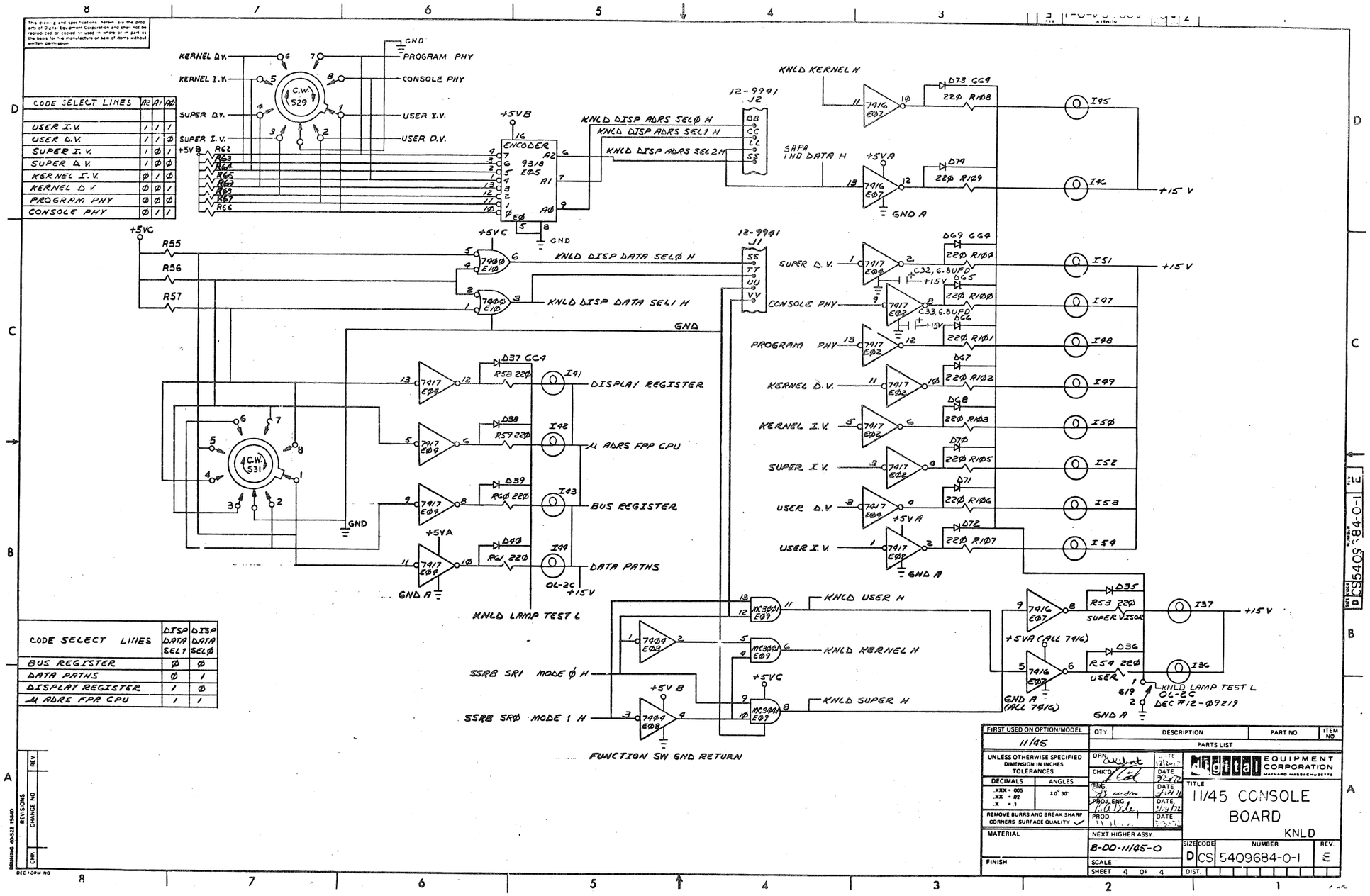

CODE SELECT LINES	A2	A1	A0
USER I.V.	1	1	1
USER D.V.	1	1	0
SUPER I.V.	1	0	1
SUPER D.V.	1	0	0
KERNEL I.V.	0	1	0
KERNEL D.V.	0	0	1
PROGRAM PHY	0	0	0
CONSOLE PHY	0	1	1

CODE SELECT LINES	DISP DATA SEL1	DISP DATA SEL0
BUS REGISTER	0	0
DATA PATHS	0	1
DISPLAY REGISTER	1	0
μ ADRS FPR CPU	1	1

FIRST USED ON OPTION/MODEL	QTY.	DESCRIPTION	PART NO.	ITEM NO.
11/45		PARTS LIST		

UNLESS OTHERWISE SPECIFIED DIMENSION IN INCHES
TOLERANCES
DECIMALS .XXX = .005 .XX = .02 .X = .1
ANGLES ±0° 30'
REMOVE BURRS AND BREAK SHARP CORNERS SURFACE QUALITY ✓

MATERIAL
FINISH

DRN. DATE 12/2/71
CHK'D DATE 12/2/71
ENG. DATE 2/14/72
PROD. ENG. DATE 2/14/72
PROD. DATE

NEXT HIGHER ASSY. B-00-11/45-0
SCALE
SHEET 4 OF 4

Digital EQUIPMENT CORPORATION MAYNARD MASSACHUSETTS

TITLE 11/45 CONSOLE BOARD
KNLD

SIZE D CODE CS NUMBER 5409684-0-1 REV. E
DIST.

DRAWING 40-522 15640
REVISIONS
REV. CHANGE NO. CHK.
DEC FORM NO.