TU10 DECmagtape engineering drawings

(all variations) R. Tinga.

digital equipment corporation · maynard, massachusetts

digital EQUIPMENT CORPORATION
MAYNARD, MASSACHUSETTS

DRAWING DIRECTORY

CUSTOMER PRINT SET INDEX

	SEQUENCE
DRAWING DIRECTORY	B-DD-TUIØA-Ø
TAPE DRIVE ASSY	D-UA-TUIØA-Ø-Ø
CONN PANEL ASSY	D-AD-7008795-Ø-0
POWER PANEL ASSY	D-AD-7008887-0-0
POWER PANEL ASSY (PL)	A-PL-7008887-0-0
MASTER LIST (TUIØ)	A-ML-TUIØ-Ø-Ø
~~DRAWING INDEX~~	~~D-DI-TUIØ-Ø-Ø~~
TAPE TRANSPORT ASSY	D-UA-TUIØ-Ø-Ø
TAPE TRANSPORT ASSY (PL)	C-PL-TUIØ-Ø-Ø
Wire List (TU1ØA)	K-WL-TU1ØA-Ø-5

MFG SET

	SEQUENCE
TAPE DRIVE ASSY	D-UA-TUIØA-Ø-Ø
CONN PANEL ASSY	D-AD-7008795-0-0
POWER PANEL ASSY	D-AD-7008887-0-0
POWER PANEL ASSY (PL)	A-PL-7008887-0-0
LOGO ASSY	D-IA-7407936-0-0
MASTER LIST	A-ML-TUIØ-Ø-Ø
DRAWING INDEX	D-DI-TUIØ-Ø-Ø
TAPE TRANSPORT ASSY	D-UA-TUIØ-Ø-Ø
TAPE TRANSPORT ASSY (PL)	C-PL-TUIØ-Ø-Ø
OFF-LINE CHECKOUT PROCEDURE	A-SP-TUIØA-Ø-1
ON-LINE CHECKOUT PROCEDURE	A-SP-TUIØA-Ø-2
ACCEPTANCE TEST PROCEDURE	A-SP-TUIØA-Ø-3
ACCESSORY LIST	A-SP-TUIØA-Ø-4

THIS IS PRINT SET

UNIT VARIATIONS

VARIATION	TITLE		PRINT SET TYPE TUIØA-Ø
TUIØA-EE	TAPE DRIVE ASSEMBLY	9 CHAN 6Ø HZ	X
TUIØA-EJ	TAPE DRIVE ASSEMBLY	9 CHAN 5Ø HZ	X
TUIØA-FE	TAPE DRIVE ASSEMBLY	7 CHAN 6Ø HZ	X
TUIØA-FJ	TAPE DRIVE ASSEMBLY	7 CHAN 5Ø HZ	X

REVISIONS

REV	CHG. NO.	DATE
A	TUIØA-3	6-1-72
B	TUIØA-4	8-8-72

USED ON OPTION/MODEL
TUIØA

DRN. V. SOUZA	DATE 4/26/72	TITLE TAPE DRIVE ASSY
CHK'D PMR	DATE 4/28/72	
PRO. ENG.	DATE 4-28-72	
PROD.	DATE 5-1-72	
FIELD SERV.	DATE 5-3-72	
SHEET 1 OF 4		

SIZE	CODE	NUMBER	REV
B	DD	TUIØA-Ø	B

DIST 6

DRB 106

DEC 16—(325)—1062—1—N871

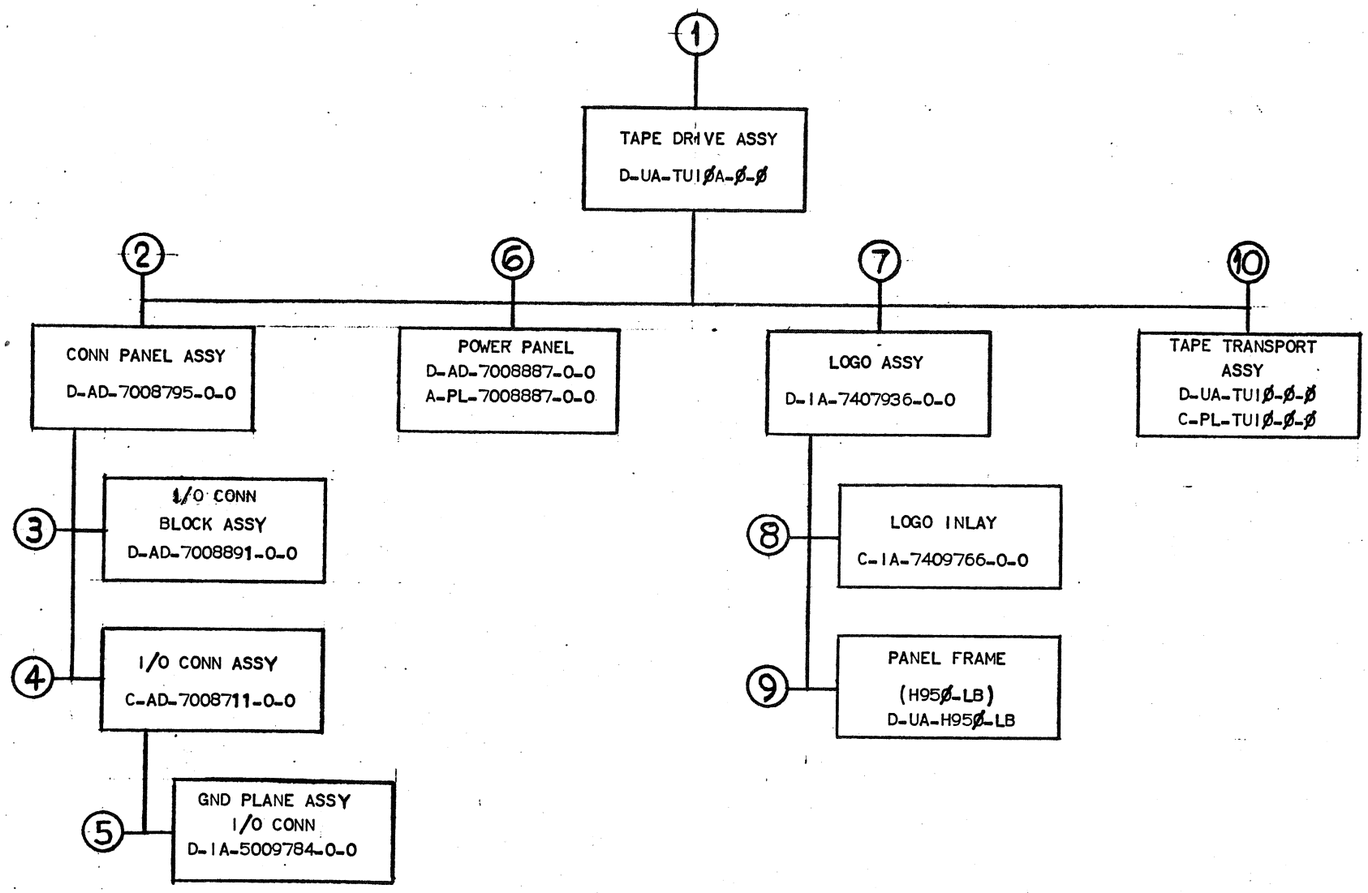

TITLE		SIZE	CODE	NUMBER	REV
TAPE DRIVE ASSEMBLY	SHEET 2 OF 4	B	DD	TU1ØA-Ø	B

DRB 107
DEC 16-(325)-1062-3-N871

ELECTRICAL

CUSTOMER PRINT SET (TU1ØA-Ø)	MFG. SET	FIND NO.	DRAWING NO.	REV	NO OF SHT	DESCRIPTION	OPTION NO.
	X		A-SP-TU1ØA-Ø-1		5	OFF-LINE CHECKOUT PROCEDURE	
	X		A-SP-TU1ØA-Ø-2		6	ON-LINE CHECKOUT PROCEDURE	
	X		A-SP-TU1ØA-Ø-3		2	ACCEPTANCE TEST PROCEDURE	
	X		A-SP-TU1ØA-Ø-4		1	ACCESSORY LIST	
C			A-ML-TU1Ø-Ø-Ø		4	MASTER DRAWING LIST	TU1Ø-Ø
~~C~~			~~D-DI-TU1Ø-Ø-1~~		~~3~~	~~DRAWING INDEX~~	~~TU1Ø-Ø~~
C	C		K-WL-TU1ØA-Ø-5		1	Wire List (TU1ØA)	

MECHANICAL

CUSTOMER PRINT SET (TU1ØA-Ø)	MFG SET	FIND NO.	DRAWING NO.	REV	NO OF SHT	DESCRIPTION	OPTION NO.
X	X	1.	D-UA-TU1ØA-Ø-Ø	A	1	TAPE DRIVE ASSEMBLY	
	X		B-DC-5308753-0-0		1	DECAL 21 POINT BLK/CLR	
	X		B-DC-5308754-0-0		1	DECAL 21 POINT BLK/CLR	
			D-UA-BCØ8B-6-Ø		1	(M9Ø4-M9Ø4) CABLE ASSY	
X	X	2.	D-AD-7008795-0-0	A	2	CONN PANEL ASSY	
			C-MD-9305502Ø-00		1	BLOCK GAGE	
			B-DC-5308753-0-0		1	DECAL 21 POINT WHT/CLR	
	X	3.	D-AD-7008891-0-0		1	I/O CONN BLOCK ASSY	
			C-MD-7409695-0-0		1	PLATE MTG	
			B-MD-5010119-0-0		1	108 PIN PROTECTION SHEET	
			B-MD-5010052-0-0		1	108 PIN GND PLANE	
		4.	C-AD-7008711-0-0			I/O CONN GND PLANE ASSY	
			A-SP-K11Ø-Ø-4			PROCESS SHEET I/O CONN	
			FIXTURE DWG REF				
			E-AD-9305449-0-0		1	OVEN FIXTURE I/O CONN	
			C-MD-9605659-0-0		1	I/O CONN GND LOCATING PLATE	
			B-MD-9305448-0-0		1	PIN GND PLANE LOCATING	
		5.	D-IA-5009784-0-0		1	GND PLANE ASSY I/O CONN	
			D-SC-121044-20-0		1	GND PLANE	
			D-SS-5009784-0-0		1	SILK SCREEN	
			A-SP-K11Ø-Ø-2		1	PROCESS SPEC	
X	X	6.	D-AD-7008887-0-0		2	POWER PANEL (TU1ØA)	
X	X		A-PL-7008887-0-0		2	POWER PANEL (TU1ØA)	
			D-IA-7409685-0-0		1	CHASSIS POWER PANEL	
			D-MD-7409686-0-0		1	COVER POWER PANEL	

TITLE		SIZE	CODE	NUMBER	REV
TAPE DRIVE ASSY	SHEET 3 OF 4	B	DD	TU1ØA-Ø	B

DRB 108

DEC - 16- (325)-1062-2A-R272

CUSTOMER PRINT SET						MFG. SET	MECHANICAL FIND NO.	DRAWING NO.	REV	NO OF SHT	DESCRIPTION	OPTION NO.
TUIØA-Ø												
						X	7.	D-IA-7407936-0-0			LOGO ASSEMBLY (TUIØA)	
							8.	C-IA-7409766-0-0			LOGO INDAY (TUIØA)	
								C-SS-7408766-0-1			SILK SCREEN	
								C-SS-7409766-0-2			SILK SCREEN	
								C-SS-7409766-0-3			SILK SCREEN	
							9.	D-UA-H95Ø-LB			PANEL FRAME H95Ø-LB	H95Ø
X							10.	D-UA-TUIØ-Ø-Ø		1	TAPE TRANSPORT ASSY	TUIØ-Ø
X								C-PL-TUIØ-Ø-Ø			TAPE TRANSPORT ASSY (PL)	

CUSTOMER PRINT SET						MFG SET	FIND NO.	DRAWING NO.	REV	NO OF SHT	DESCRIPTION	OPTION NO.

TITLE		SIZE	CODE	NUMBER	REV
TAPE DRIVE ASSY	SHEET 4 OF4	B	DD	TUIØA-Ø	B

DRB 108

DEC - 16- (325)-1062-2A-R272

This drawing and specifications, herein, are the property of Digital Equipment Corporation and shall not be reproduced or copied or used in whole or in part as the basis for the manufacture or sale of items without written permission.

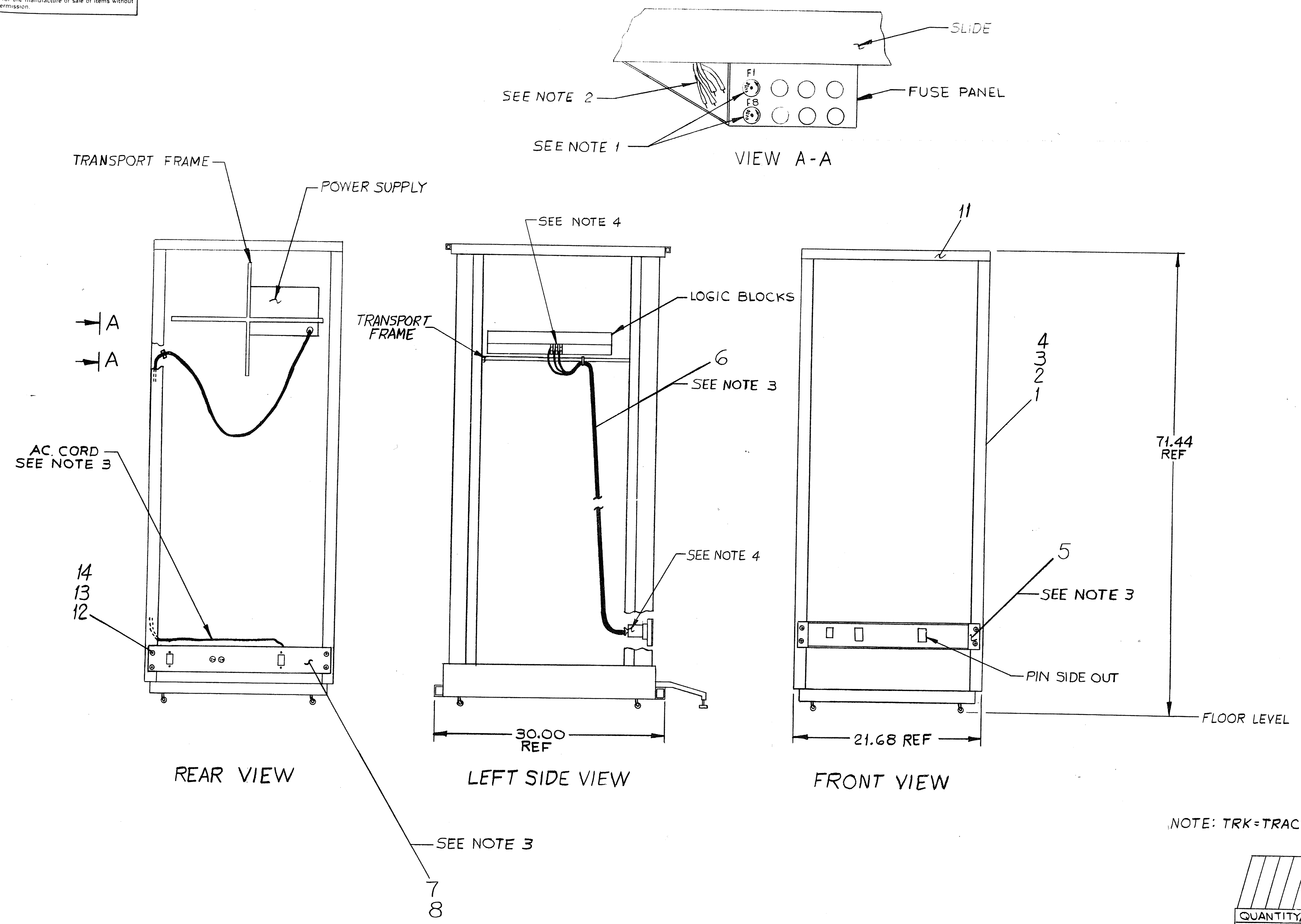

NOTES:

1. REMOVE F1 & F8. PLUG HOLES WITH FASTENER, DOT (ITEM #16)
2. SPLICE TWO WHITE WIRES WITH (ITEM #15) AND FASTON SOLDERLESS CONN (ITEM #17) SPLICE TWO RED WIRES THE SAME WAY
3. REFER TO A-SP-TU1ØA-Ø-1 FOR INSTALLATION
4. FOR LOCATION OF DECALS (ITEM #9 & 10) TO BE INSTALLED ON CABLE ASSY (ITEM #5) REFER TO DWG D-AD-7008795-0-0

LOCATION OF TINNERMAN NUTS (ITEM #12)	
LOCATE ALL NUTS BY COUNTING HOLES UP FROM BOTTOM OF CAB FRAME	
FRONT HOLE NUMBERS	
FRONT: 10,14	REAR: 3,6

NOTE: TRK = TRACK

TU1ØA-FJ	TU1ØA-FE	TU1ØA-EJ	TU1ØA-EE	DESCRIPTION	PART NO.	ITEM NO.
4	4	4	4	CONN., SOLDERLESS (ARKLESS #50902)	9007917	17
2	2	2	2	FASTENER, DOT (#48152)	9007060	16
2	2	2	2	WIRE SPLICE (ARKLESS #34203)	9008091	15
A/R	A/R	A/R	A/R	SCREW, PHL HD TRUSS #10-32 X 5/8 LG	9006074-3	14
A/R	A/R	A/R	A/R	LOCKWASHER EXT. TOOTH #10	9007651	13
A/R	A/R	A/R	A/R	TINNERMAN NUT #10-32	9007786	12
1	1	1	1	LOGO ASSY	D-IA-7407936-24	11
A/R	A/R	A/R	A/R	21 POINT DECAL (BLK/CLR)	B-DC-5308754-0-0	10
A/R	A/R	A/R	A/R	21 POINT DECAL (BLK/CLR)	B-DC-5308753-0-0	9
1	-	1	-	POWER PANEL (TU1ØA)	D-AD-7008887-0-2	8
-	1	-	1	POWER PANEL (TU1ØA)	D-AD-7008887-0-1	7
3	3	3	3	CABLE ASSY (M9Ø4-M9Ø4)	D-UA-BCØ8B-6-Ø	6
1	1	1	1	CONN PANEL ASSY	D-AD-7008795-0-0	5
1	-	-	-	7 TRK SLAVE 23ØV 5ØHZ (TU1Ø-FJ)	D-UA-TU1Ø-Ø-Ø	4
-	1	-	-	7 TRK SLAVE 115V 6ØHZ (TU1Ø-FE)	D-UA-TU1Ø-Ø-Ø	3
-	-	1	-	9 TRK SLAVE 23ØV 5ØHZ (TU1Ø-EJ)	D-UA-TU1Ø-Ø-Ø	2
-	-	-	1	9 TRK SLAVE 115V 6ØHZ (TU1Ø-EE)	D-UA-TU1Ø-Ø-Ø	1

QUANTITY/VARIATION — QTY. | DESCRIPTION | PART NO. | ITEM NO.

PARTS LIST

FIRST USED ON OPT/MOD: TU1ØA

DO NOT SCALE DRAWING

UNLESS OTHERWISE SPECIFIED
DIMENSION IN INCHES
TOLERANCES
~~DECIMALS ±.005~~ ~~FRACTIONS ±1/64~~ ANGLES ± 0°30'
FINAL SURFACE QUALITY ✓
REMOVE BURRS AND BREAK SHARP CORNERS

MATERIAL: //
FINISH: //

DRN.	[signature]	DATE 4-25-
CHK'D.	[signature]	DATE 4/27/
ENG.	Louis J. Carpenito	DATE 4/28/
PROJ. ENG.	J. Sullivan	DATE 4-28
PROD.	[signature]	DATE 5-1-

NEXT HIGHER ASSY: B-DD-TU1ØA-Ø-Ø

SCALE: //
SHEET 1 OF 1

digital EQUIPMENT CORPORATION
MAYNARD, MASSACHUSETTS

TITLE: TAPE DRIVE ASSEMBLY

SIZE	CODE	NUMBER	REV.
D	UA	TU1ØA-Ø-Ø	A

DIST.

REVISIONS			
REV.	CHANGE NO.	CHK	
A	TU1ØA-00004	6-27-72	J. SULLIVAN

DEC FORM NO DRD 100

This drawing and specifications, herein, are the property of Digital Equipment Corporation and shall not be reproduced or copied or used in whole or in part as the basis for the manufacture or sale of items without written permission.

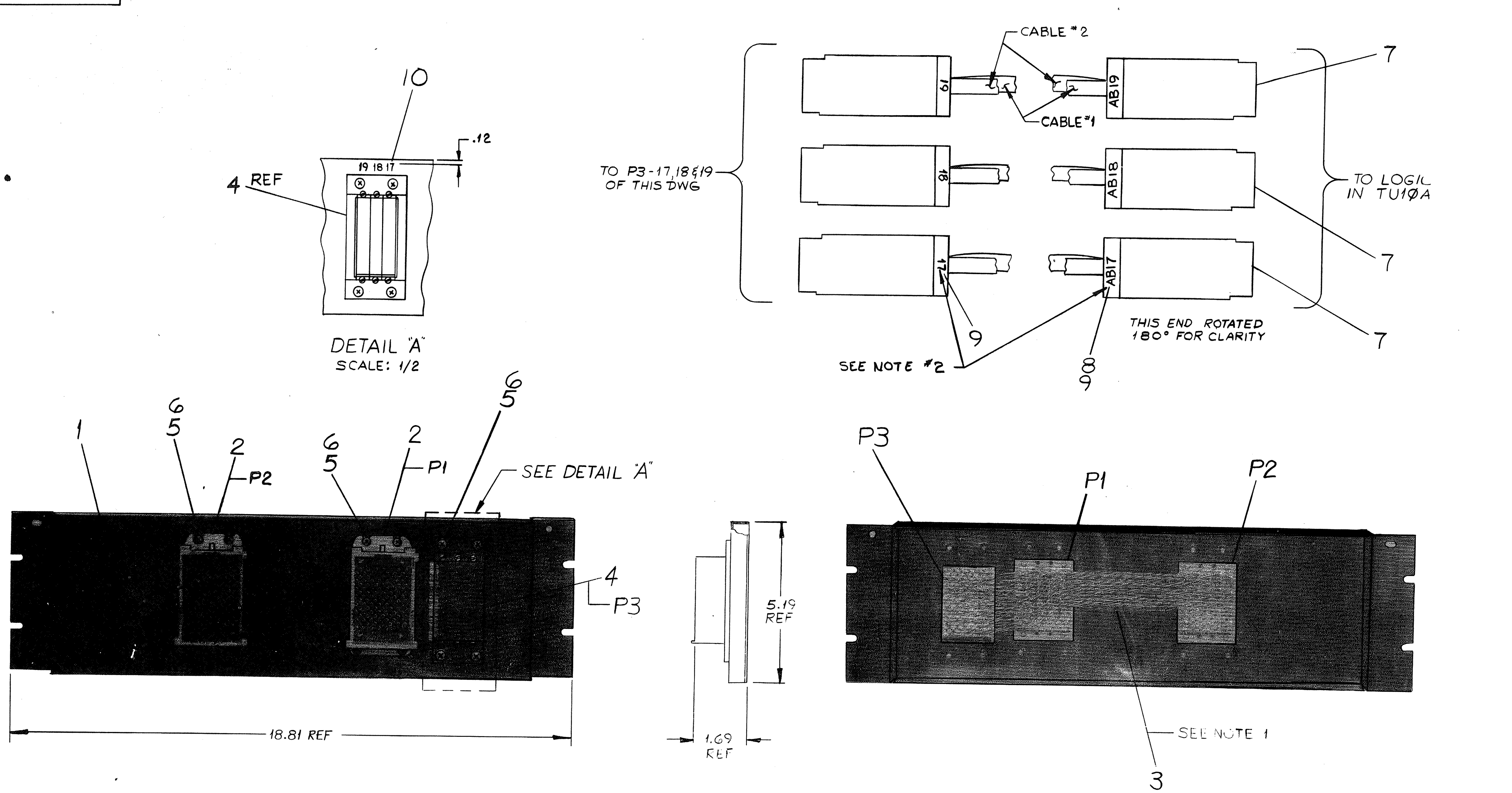

NOTES:

1. CONN P1, P2 & P3 ARE TO BE WIREWRAPPED ACCORDING TO TU1ØA QKLAT NUMERICAL CONTROL WIRE WRAP PROGRAM.
2. M904 BOARDS ARE TO BE LABELED AS SHOWN (17, 18, 19, AB17, AB18 & AB19) USING ITEMS 8 & 9, AT INSTALLATION. ALSO LABEL PANEL WHERE SHOWN IN DETAIL "A".
3. ASSEMBLE CONNECTORS P1 & P2 TO PANEL WITH ALIGNMENT FIXTURE #9305469. ASSEMBLE CONNECTOR P3 WITH GAGE BLOCK C-MD-9305502-0-0 BETWEEN P1 & P3.
4. USE NC PALLET E-IA-9605795 FOR WIRE WRAPPING.

QTY.	DESCRIPTION	PART NO.	ITEM NO.
REF	WIRE LIST		
A/R	21 POINT DECAL WHT/CLR	B-DC-5308753-0-0	10
A/R	21 POINT DECAL BLK/CLR	B-DC-5308753-0-0	9
A/R	21 POINT DECAL BLK/CLR	B-DC-5308754-0-0	8
REF	CABLE, FLAT CO-AX M904-M904	D-UA-BCØ8B-6-Ø	7
12	SCR PHIL HD PAN #8-32 X 1/2 LG	9006039-1	6
12	WASHER EXT TOOTH LOCK #8	9008270	5
1	I/O CONN BLOCK ASSEMBLY	D-AD-7008891-0-0	4
A/R	#30 AWG BLK/WHT TWP KYNAR	9107720-09	3
2	I/O CONN ASSEMBLY	C-AD-7008711-0-0	2
1	I/O CONN PANEL	D-IA-7409568-0-0	1

PARTS LIST

FIRST USED ON OPTION/MODEL: TU1ØA

UNLESS OTHERWISE SPECIFIED DIMENSION IN INCHES. TOLERANCES
DECIMALS: .XXX ± .005, .XX ± .02, .X ± .1
ANGLES: ± 0° 30'
REMOVE BURRS AND BREAK SHARP CORNERS SURFACE QUALITY ✓
MATERIAL —//—
FINISH —//—

DRN. V. E. Lawyer — DATE 3-31-72
CHK'D. Louis Carpenito — DATE 4-6-72
ENG. J. Rhoudent — DATE 4-7-72
PROJ. ENG. J. Sullivan — DATE 4-6-72
PROD. M. Conroy — DATE 4-11-72

NEXT HIGHER ASSY. D-UA-TU1ØA-Ø-Ø

digital EQUIPMENT CORPORATION MAYNARD, MASSACHUSETTS

TITLE: CONN PANEL ASSY

SIZE D | CODE AD | NUMBER 7008795-0-0 | REV. A
SCALE —//— SHEET 1 OF 2 DIST. G

REVISIONS: REV. A — CHANGE NO. TU10A-00001 — REDRAWN & REVISED

DEC FORM NO DRD 100-A

This drawing and specifications, herein, are the property of Digital Equipment Corporation and shall not be reproduced or copied or used in whole or in part as the basis for the manufacture or sale of items without written permission.

TU1ØA QKLAT SIGNAL NAME AID

TU1ØA SIGNAL NAME	P3 ASSY PIN NO	TU1ØA SIGNAL NAME	P3 ASSY PIN NO.	TU1ØA SIGNAL NAME	P3 ASSY PIN NO.
WD B/2 (1)	17B1	TB WRITE LPCC (B)	17S2	TB WRL/TB UNLOAD	18K2
A/3 (1)	D1	TB ENABLE MOTION DLY (B)	17T2	RWS/TB WRITING	M2
B/4 (1)	E1	T SET TAPE FUNCTION	17V2	7CH	P2
4/5 (1)	H1	RD B/2 (1)	18B1	556 CLK	S2
2/6 (1)	J1	A/3 (1)	D1	8ØØ CLK	T2
1/7 (1)	L1	B/4 (1)	E1	READ SKEW OVER	18V2
PARITY	M1	4/5 (1)	H1	2ØØ DEN	19D2
Ø/1 (1)	P1	2/6 (1)	J1	556 DEN	E2
WD Ø/Ø (1)	S1	1/7 (1)	L1	8ØØ DEN	H2
T RECORD DATA (B)	D2	BP (1)	M1	SET DWN (B)	K2
TB SEL Ø (B)	E2	Ø/1 (1)	P1	TUR (B)	M2
SEL 1 (B)	H2	RD Ø/Ø (1)	S1	START DLY	P2
SEL 2 (B)	K2	TB SP REV	D2	SPARE	S2
MOVE (B)	M2	TB BOT/TB FWD	E2	SPARE	T2
TB START (B)	17P2	TB EOT/TB REWIND	18H2	TB SPARE	19V2

NOTE: THIS IS NOT TO BE USED AS A WIRING TABLE

FIRST USED ON OPTION/MODEL	QTY.	DESCRIPTION	PART NO.	ITEM NO.
TU1ØA		PARTS LIST		

UNLESS OTHERWISE SPECIFIED DIMENSION IN INCHES. TOLERANCES

DECIMALS	ANGLES
.XXX = .005 .XX = .02 .X = .1	±0° 30'

REMOVE BURRS AND BREAK SHARP CORNERS SURFACE QUALITY ✓

MATERIAL —//—

FINISH —//—

DRN.		DATE 3-31-72
CHK'D.		DATE 4-6-72
ENG.		DATE 4-7-72
PROJ. ENG.		DATE 4-11-72
PROD.		DATE

NEXT HIGHER ASSY.

SCALE —//—

SHEET 2 OF 2

digital EQUIPMENT CORPORATION MAYNARD, MASSACHUSETTS

TITLE CONN PANEL ASSY

SIZE	CODE	NUMBER	REV.
D	AD	7008795-0-0	A

DIST. G

REVISIONS	REV.
CHANGE NO.	
CHK.	

DEC FORM NO. DRD 100-A

This drawing and specifications, herein, are the property of Digital Equipment Corporation and shall not be reproduced or copied or used in whole or in part as the basis for the manufacture or sale of items without written permission.

LEGEND	
NUMBER	VARIATION
7008887-1	115V 60 HZ
7008887-2	230V 50 HZ

NOTES:

1. ITEMS #21,34 & 35 TO BE REMOVED FOR 230V OPERATION.
2. ASSEMBLE ITEM #22 (TAB) TO ITEM #7 OR 18 (RECEPTACLE) BEFORE INSALLATION TO ITEM #1 (CHASSIS).
3. FOR 50 HZ OPERATION REPLACE DECAL INDICATED WITH "UNSWD 230VAC 50 HZ"
4. CUT INSULATION BACK 6" BEFORE ATTACHING ITEM 36 OR 37 AT ASSY

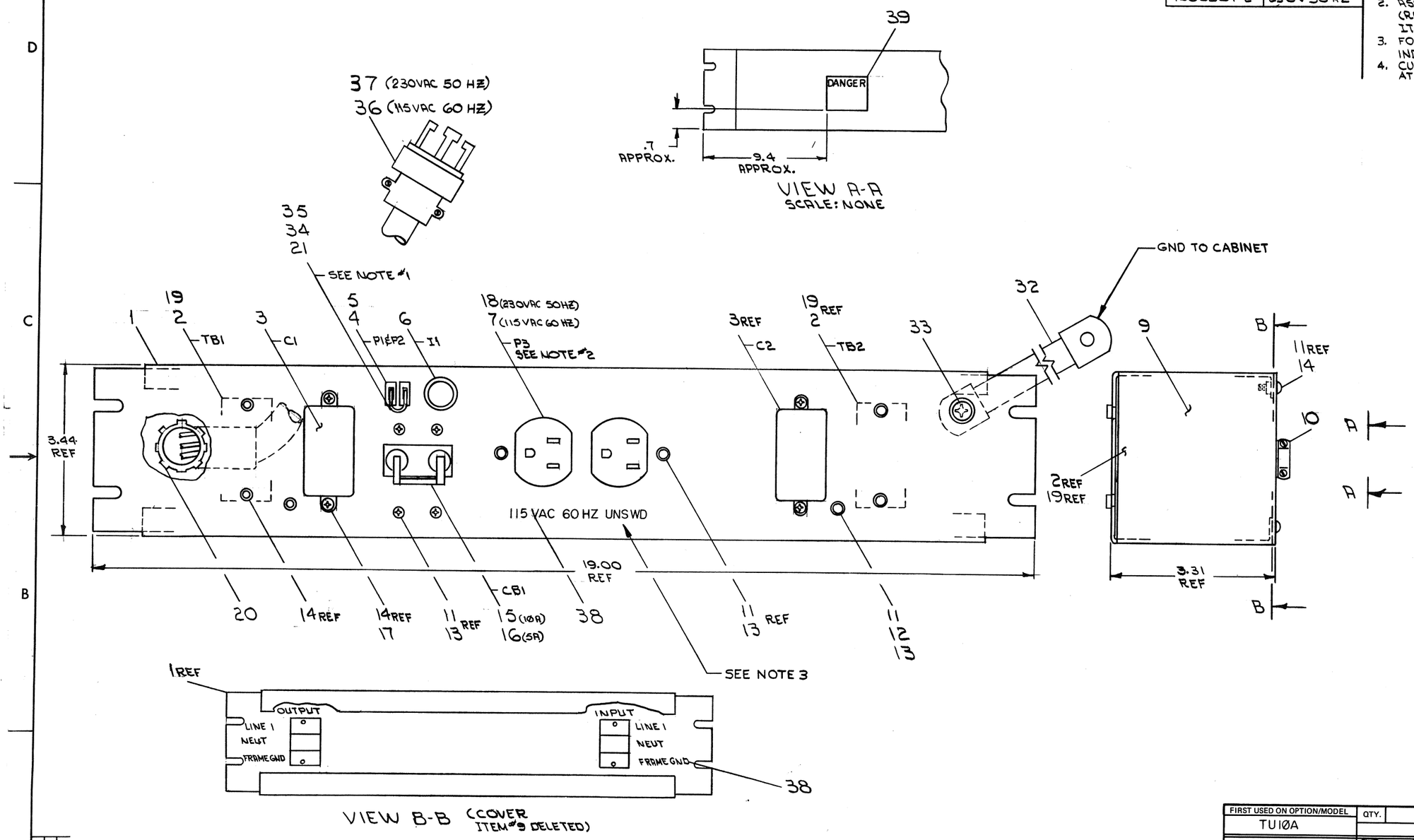

FIRST USED ON OPTION/MODEL	QTY.	DESCRIPTION	PART NO.	ITEM NO.
TU10A		PARTS LIST		

UNLESS OTHERWISE SPECIFIED DIMENSION IN INCHES. TOLERANCES

DECIMALS	ANGLES
.XXX = .005 .XX = .02 .X = .1	±0° 30'

REMOVE BURRS AND BREAK SHARP CORNERS SURFACE QUALITY ✓

MATERIAL —//—

FINISH —//—

		DATE
DRN.		21 Mar 72
CHKD.		3/19/72
ENG.		4-20-72
PROJ. ENG.		4/20/72
PROD.		4-20-72

digital EQUIPMENT CORPORATION MAYNARD, MASSACHUSETTS

TITLE

POWER PANEL (TU10A)

NEXT HIGHER ASSY. D-UA-TU10A-0-0

SCALE NONE

SHEET 1 OF 2

SIZE	CODE	NUMBER	REV.
D	AD	7008887-0-0	

DIST. 5

REVISIONS: REV. / CHANGE NO. / CHK

DEC FORM NO. DRD 100-A

This drawing and specifications, herein, are the property of Digital Equipment Corporation and shall not be reproduced or copied or used in whole or in part as the basis for the manufacture or sale of items without written permission.

WIRE TABLE

ITEM NO.	DESCRIPTION AWG	COLOR	FROM CONNECTION	WITH	TO CONNECTION	WITH	REMARKS
26	14	GRN	TB1-4	21	P3-3	21,22	SEE NOTE #2
26	14	GRN	TB1-4	21	GND-1	11,12	
24	14	WHT	TB1-5	21	C1-5	21	
25	14	RED	TB1-6	21	C1-4	21	
6	—	RED	C1-2	21	I1-2	—	
25	14	RED	CB1-4	21	P3-2	21	
24	14	WHT	C1-6	21	P1	SOLD	
30	—	BLK	R3-1	28			
	—	BLK	R3-2	28			
6	—	BLK	I1-1	—	P2	SOLD	
24	14	WHT	CB1-1	21, 8	L1-1	23, 28	
					R1-1		
25	14	RED	CB1-2	21, 8	L2-1	23, 28	
					R2-1		
26	14	GRN	P3-3	21,22	TB2-1	21	SEE NOTE #2
24	14	WHT	P3-5	21	CB1-3	21	
29	—	BLK	R2-2	28	C2-8	23	
31,24	—	WHT	L2-2	21			
31,25	14	RED	L1-2	23	C2-4	23	
28	—	BLK	R1-2				
25	14	RED	C1-1	21	P3-1	21	
24	14	WHT	C1-8	21	P3-4	21	
25	14	RED	C2-2	21	TB2-3	21	
24	14	WHT	C2-6	21	TB2-2	21	
26	14	GRN	TB2-1	21	GND-2	11,12	
36	—	GRN	——	—	TB1-1		SEE NOTE #4
	—	WHT	——	—	TB1-2		
	—	BLK	——	—	TB1-3	—	
34	18	ORN	P1	21,35	P2	21,35	SEE NOTE #1

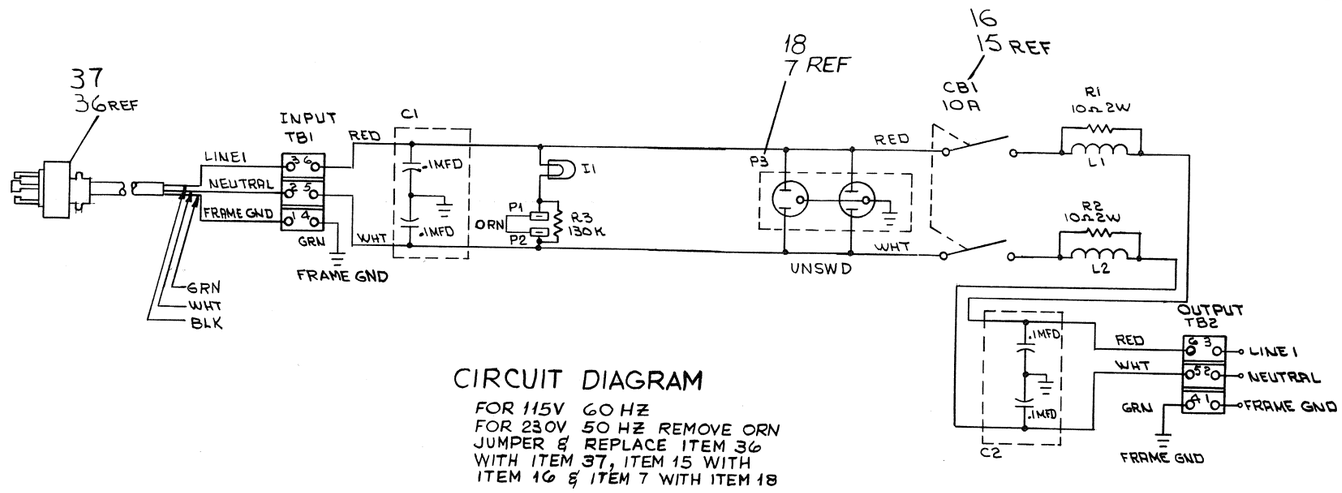

CIRCUIT DIAGRAM

FOR 115V 60 HZ
FOR 230V 50 HZ REMOVE ORN JUMPER & REPLACE ITEM 36 WITH ITEM 37, ITEM 15 WITH ITEM 16 & ITEM 7 WITH ITEM 18

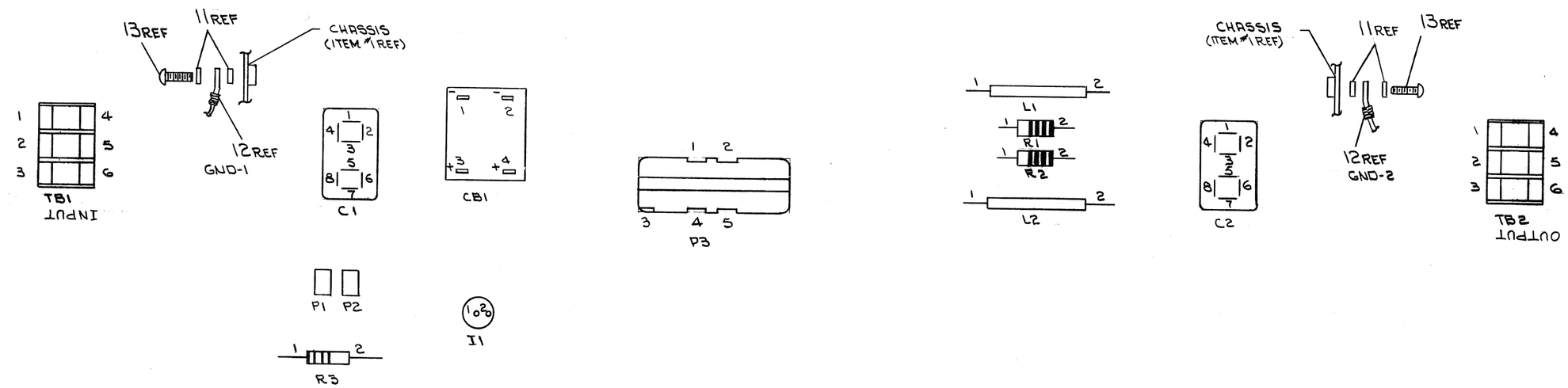

FIRST USED ON OPTION/MODEL	QTY.	DESCRIPTION	PART NO.	ITEM NO.
TUIØA		PARTS LIST		

UNLESS OTHERWISE SPECIFIED DIMENSION IN INCHES. TOLERANCES

DECIMALS	ANGLES
.XXX = .005 .XX = .02 .X = .1	±0° 30'

REMOVE BURRS AND BREAK SHARP CORNERS SURFACE QUALITY ✓

MATERIAL —//—

FINISH —//—

		DATE
DRN.	[signature]	21 Apr 72
CHK'D.	D. Neal	4/19/72
ENG.	K. Carpenter	4/20/72
PROD. ENG.	J. Sullivan	4/20/72
PROD.	Larry Rogers	4-20-72

digital EQUIPMENT CORPORATION MAYNARD, MASSACHUSETTS

TITLE POWER PANEL (TUIØA)

NEXT HIGHER ASSY. D-UA-TUIØA-0-0

SCALE NONE

SHEET 2 OF 2

SIZE	CODE	NUMBER	REV.
D	AD	7008887-0-0	

DIST. G

REVISIONS: REV. / CHANGE NO. / CHK

DEC FORM NO. DRD 100-A

SIZE D CODE AD NUMBER 7008887-0-0 REV.

DIGITAL EQUIPMENT CORPORATION
MAYNARD, MASSACHUSETTS

PARTS LIST

MADE BY P.J. LEBLANC	CHECKED D. HEALY	SECTION
DATE 21 MAR. 72	DATE 3/24/72	1
ENG L. Carpenito	PROD Jerry Hugg	ISSUED SECT.
DATE 4/20/72	DATE 4-20-72	1

ITEM NO.	DWG NO./PART NO.	DESCRIPTION	QUANTITY/VARIATION 7008887-1	7008887-2
1	D-IA-7409685-0-0	CHASSIS, POWER PANEL	1	1
2	1209158-1	TERM. BLOCK 3 SEC #529 BUCHANAN	6	6
3	1002153	CAP 2X .1MFD 1000 VDC	2	2
4	9007234	JUNCTION TERM, BUSH. (HEYMAN) ORN.	2	2
5	9007238	TAB, HEYMAN #T-202-S	2	2
6	1201280	LAMP #1020 C55 125V RED LENS IND DEV	1	1
7	1205351	RECEPTACLE DBL #10103 (115V 15A) A.H.	1	--
8	9008091	WIRE SPLICE #34203 ARK-LESS	2	2
9	D-MD-7409686-0-0	COVER, POWER PANEL	1	1
10	9008280	CONN. ROMEX 3/8'' EFCOR #1111DC	1	1
11	9006633	WASHER INT TOOTH LOCK #6	18	18
12	9007928	SOLD, CONN #50364 ARK-LESS (BLU)	2	2
13	9008020-1	SCR PHL HD PAN #6-32 X 3/16 LG	8	8
14	9006020-1	SCR PHL HD PAN #6-32 X 1/4 LG	14	14
15	1210191-0	CKT BKR 10A2PM #52MC2123-10 (240V)	1	-
16	1210191-1	CKT BKR 5A2PM #52MC2123-5 (240V)	-	1
17	9006560	NUT KEPS #6-32	4	4
18	9008856	RECEPTACLE DBL #10122 (240V 15A) A.H.	-	1
19	1209158-2	END SECTION #530 BUCHANAN	2	2
20	9007803	90° ANGLE #2202 1/2" SIZE	1	1
21	9007917-0	SOLD CONN #50902 ARK-LESS (RED)	34	32
22	9007112	FASTON TAB #60145-1 AMP	2	2

TITLE	ASSY NO.	SIZE	CODE	NUMBER	REV.	ECO NO.
POWER PANEL (TU10-A)	D-AD-7008887-0-0	A	PL	7008887-0-0		
	SHEET 1 OF 2	DIST.				

DIGITAL EQUIPMENT CORPORATION
MAYNARD, MASSACHUSETTS

PARTS LIST

MADE BY P.J.LEBLANC	CHECKED D. HEALY	SECTION
DATE 21 MAR 72	DATE 3/24/72	1
ENG L. Carpenito	PROD Jerry Hugg	ISSUED SECT.
DATE 4/20/72	DATE 4-20-72	1

ITEM NO.	DWG NO./PART NO.	DESCRIPTION	QUANTITY/VARIATION 7008887-1	7008887-2
23	9007919-0	SOLD CONN #50906 ARK-LESS (BLU)	2	2
24	9107370-99	WIRE #14 AWG STRD TEF INS. WHT	A/R	A/R
25	9107370-22	WIRE #14 AWG STRD TEF INS. RED	A/R	A/R
26	9107370-55	WIRE #14 AWG STRD TEF INS. GRN	A/R	A/R
27	9107370-00	WIRE #14 AWG STRD TEF INS BLK	A/R	A/R
28	9107278-00	TUBING #18 AWG BLK.	A/R	A/R
29	1300172	RESISTOR 10Ω 2W 10% CC	2	2
30	1305604	RESISTOR 130K 1W 5% CC	1	1
31	1605147	FERRITE TUBE #56-261-30-3B	2	2
32	9008887	GROUND STRAP 11" LG.	1	1
33	9006055-1	SCR PHL HD PAN #1/4-20 X 3/8 LG.	1	1
34	9107360-33	WIRE #18AWG STRD TEF INS ORN	A/R	-
35	9107305-22	TUBING RED SHRINKABLE #14 X 9/16	A/R	-
36	7005128	CABLE, POWER 25FT. 60HZ	1	-
37	7006419	CABLE, POWER 25FT. 50HZ	-	1
38	A-DC-7409717-0-0	DECALS	A/R	A/R
39	3610267	HIGH VOLTAGE LABEL 2 1/16 X 2 1/16	1	1

TITLE	ASSY NO.	SIZE	CODE	NUMBER	REV.	ECO NO.
POWER PANEL (TU10-A)	D-AD-7008887-0-0	A	PL	7008887-0-0		
	SHEET 2 OF 2	DIST.				

MASTER DRAWING LIST

MAINTENANCE MANUALS NO.	TITLE	TU1Ø-EA	TU1Ø-EB	TU1Ø-EC	TU1Ø-ED	TU1Ø-EE	TU1Ø-EF	TU1Ø-EH	TU1Ø-EJ	TU1Ø-FA	TU1Ø-FB	TU1Ø-FC	TU1Ø-FD	TU1Ø-FE	TU1Ø-FF	TU1Ø-FH	TU1Ø-FJ
TU1Ø-M	(MASTER UNIT)	X	X	X	X	-	-	-	-	X	X	X	X	-	-	-	-
TU1Ø-S	($LAVE UNIT)	X	-	-	-	X	X	X	X	-	-	-	-	X	X	X	X

UNIT VARIATIONS

USED ON OPTIONS

REVISIONS

REV.	DATE	CHG. NO	APP'D.
A	5/71	00036	J.B.
B	5/71	00037	J.B.
C	5/71	00044	J.B.
D	7/71	00044	arg
E	7/71	00045	arg
F	7/71	00047	arg
H	8/71	00049	arg
J	8/71	00050	WCS
K	10/71	0005[illegible]	MM
L	12/71	0005[illegible]	[illegible]
M	2/72	0005[illegible]	J.B.
N	2/72	00056	J.B.
P	2/72	00057	J.B.
R	7/72	00065	J.B.
S	7/72	MISC-94	R.B.
T	7/72	TU10-68	J.B.
U	1/73	TU10-72	J.H.
V	3/73	TU10-74	J.B.
W	4/73	TU10-76	[illegible]
Y	11/73	TU10-80	[illegible]
Z	11/73	TU10-81	[illegible]
AA	1/74	TU10-82	J.B.
AB	2/74		

		DATE
DRN.	ROBICHAUD	2-17-71
CHK'D.	K. RUSS	2-18-71
ENG.	D. Benatar	2-18-71
PROJ. ENG.	J. Benatar	2-18-71
PROD.	B.E. Cross	2-19-71

FIRST USED ON

SCALE #

SHEET 1 OF 4

digital EQUIPMENT CORPORATION
MAYNARD, MASSACHUSETTS

TITLE TU10 TAPE TRANSPORT

SIZE	CODE	NUMBER	REV.
A	ML	TU1Ø-Ø	AB

DIST.

DRA 131

PRINT SET TU1Ø-M	PRINT SET TU1Ø-S	DWG. NO.	REV. LET.	NO. OF SHEETS	TITLE	OPTION NO.
X	X	D-UA-TU1Ø-Ø-Ø	E	1	TAPE TRANSPORT ASSY	
X	X	C-PL-TU1Ø-Ø-Ø	E	1	TAPE TRANSPORT ASSY (PL)	
X	X	D-DI-TU1Ø-Ø-1	N	3	DRAWING INDEX TU1Ø	
X	X	D-BS-TU1Ø-Ø-3	B	1	MOTOR CONTROL (MASTER/SLAVE)	
X	X	D-BS-TU1Ø-Ø-4	C	2	CONNECTORS & INDICATORS (MASTER/SLAVE)	
X	X	D-BS-TU1Ø-Ø-5	B	1	COMMAND LOGIC (MASTER/SLAVE)	
X	X	D-BS-TU1Ø-Ø-6	C	1	MOTION LOGIC (MASTER/SLAVE)	
X	X	D-BS-TU1Ø-Ø-7	C	1	BUS LOGIC (MASTER/SLAVE)	
X	X	D-BS-TU1Ø-Ø-8	B	1	READ WRITE TIMING LOGIC (MASTER/SLAVE)	
X	X	D-BS-TU1Ø-Ø-9	B	1	WRITE CIRCUITRY (MASTER/SLAVE)	
X	X	D-BS-TU1Ø-Ø-1Ø	B	1	READ CIRCUITRY (MASTER/SLAVE)	
-	X	D-MU-TU1Ø-Ø-11	C	1	MODULE UTILIZATION (SLAVE)	
-	X	A-PL-TU1Ø-Ø-11	C	1	MODULE UTILIZATION (SLAVE)	
X	-	D-BS-TU1Ø-Ø-12	A	2	MASTER BUS DRIVERS & INTERCONNECTIONS	
X	-	D-CS-M7672-Ø-1	#	2	COMMAND BUFFERS (TU13)	
X	-	D-CS-M891-Ø-1	#	2	CRC & WRITE GATING (TU14)	
X	-	D-CS-M895-Ø-1	#	2	READ TIMING (TU15)	
X	-	D-CS-M892-Ø-1	#	2	GAP TIMING & READ PARITY (TU16)	
X	-	D-CS-M7673-Ø-1	#	2	DATA CHECKER (TU17)	
X	-	A-PL-TU1Ø-Ø-18	A	2		
X	-	D-MU-TU1Ø-Ø-18	A	1	MODULE UTILIZATION (MASTER)	
X	X	D-AD-7006755-0-0	E	1	WIRED ASSY	
X	X	A-PL-7006755-0-0	E	1	WIRED ASSY (PL)	
X	X	K-WL-TU1Ø-Ø-2	J		WIRE LIST	
X	X	A-ML-H73Ø-Ø	#	1	H73Ø POWER SUPPLY	
X	X	D-CS-H73Ø-Ø-1	#	1	H73Ø POWER SUPPLY SCHEMATIC	H73Ø
X	X	D-UA-H73Ø-Ø-Ø	#	4	H73Ø POWER SUPPLY ASSY	H73Ø

TITLE TAPE TRANSPORT ASSY

SHEET 2 OF 4

SIZE	CODE	NUMBER	REV.
A	ML	TU1Ø-Ø	AB

DRA 132

DEC 16-(325)-1048-1-N471

PRINT SET TU1Ø-M	PRINT SET TU1Ø-S					DWG. NO.	REV. LET.	NO. OF SHEETS	TITLE	OPTION NO.
X	X					A=PL-H73Ø-Ø-Ø	#	4	H73Ø POWER SUPPLY ASSY	H73Ø
X	X					D-DI-H73Ø-Ø-2	#	-	DRAWING INDEX	H73Ø
X	X					D-AD-7006756-0-0	#	8	TRANSPORT ASSY	
X	X					A-PL-7006756-0-0	#	8	TRANSPORT ASSY PARTS LIST	
X	X					D-AD-7006757-0-0	#	2	CONTROL BOX ASSY	
X	X					A-PL-7006757-0-0	#	2	CONTROL BOX ASSY (PL)	
X	X					D-AD-7006743-0-0	#	1	UNIT DOOR ASSY	
X	X					A-PL-7006743-0-0	#	2	UNIT DOOR ASSY (PL)	
X	X					C-AD-7006754-0-0	#	1	LOGIC ASSY	
X	X					A-PL-7006754-0-0	#	1	LOGIC ASSY (PL)	
X	X					A-SP-TU1Ø-Ø-19	B	5	TU1Ø ACCEPTANCE CRITERIA	
X	X					A-AL-TU1Ø-Ø-21	B	1	ACCESSORY LIST	
X	X					D-CS-GØ5Ø-Ø-1	#	1	DUAL GAP HEAD READ AMP.	
X	X					D-CS-GØ6Ø-Ø-1	#	1	MAG TAPE COMPRESSOR, 9 TRACK	
X	X					D-CS-GØ62-Ø-1	#	1	MAG TAPE PEAK DETECTOR, 9 TRACK	
X	X					D-CS-GØ64-Ø-1	#	1	MAG TAPE SLICER 9 TRACK	
X	X					D-CS-G35Ø-Ø-1	#	1	MAG TAPE WRITE DRIVER	
X	X					D-CS-G932-Ø-1	#	1	CAPSTAN SERVO PRE AMP	
X	X					D-CS-G933-Ø-1	#	1	REEL MOTOR AMP.	
X	X					D-CS-G934Ø-Ø-1	#	1	BRAKE LOGIC	
X	X					D-CS-G9341-Ø-1	#	1	BRAKE ACTUATOR	
X	X					D-CS-M514-Ø-1	#	1	TU10 TRANSCEIVER	
X	X					D-CS-M763-Ø-1	#	1	9 TRACK WRITE BUFFER	
X	X					D-CS-M765-Ø-1	#	1	9 TRACK READ BUFFER	
X	X					D-CS-M767-Ø-1	#	1	CLOCK & SKEW DELAY	
X	X					D-CS-M768-Ø-1	#	1	DELAY SELECTOR	

TITLE	SHEET	SIZE	CODE	NUMBER	REV.
TAPE TRANSPORT ASSY	3 OF 4	A	ML	TU1Ø-Ø	AB

PRINT SET TU1Ø-M	PRINT SET TU1Ø-S					DWG. NO.	REV. LET.	NO. OF SHEETS	TITLE	OPTION NO.
X	X					D-CS-M769-Ø-1	#	1	FUNCTION CONTROL	
X	X					D-CS-M89Ø=Ø-1	#	1	MOTION CONTROL	
X	X					D-CS-M767Ø-Ø-1	#	1	FORWARD B.O.T. TIMER	
X	X					D-CS-H6Ø3-Ø-1	#	1	CAPSTAN SERVO POWER AMPLIFIER	
X	X					D-CS-W726-Ø-1	#	1	SWITCH FILTER	
X	X					C-CS-5408924-0-1	#	1	POWER CONTROL	H73Ø
X	X					D-CS-5408928-0-1	#	1	VOLTAGE REGULATOR	H73Ø
X	X					D-CS-G741-Ø-1	#	1	NEG CLAMP LOAD	
X	-					D-CS-M64Ø-Ø-1	#	1	MASTER INTERFACE BUS DRIVER	
X	-					D-CS-M7671-Ø-1	#	1	MASTER SLAVE BUS DRIVER	
X	-					D-CS-M1ØØ-Ø-1	#	1	SLAVE MASTER BUS DRIVER	
X	-					D-CS-M896-Ø-1	#	1	CRC CHECKER	

TITLE	SHEET	SIZE	CODE	NUMBER	REV.
TAPE TRANSPORT ASSY	4 OF 4	A	ML	TU1Ø-Ø	AB

DRA 132

DEC 16-(325)-1048-1-N471

This drawing and specifications, herein, are the property of Digital Equipment Corporation and shall not be reproduced or copied or used in whole or in part as the basis for the manufacture or sale of items without written permission.

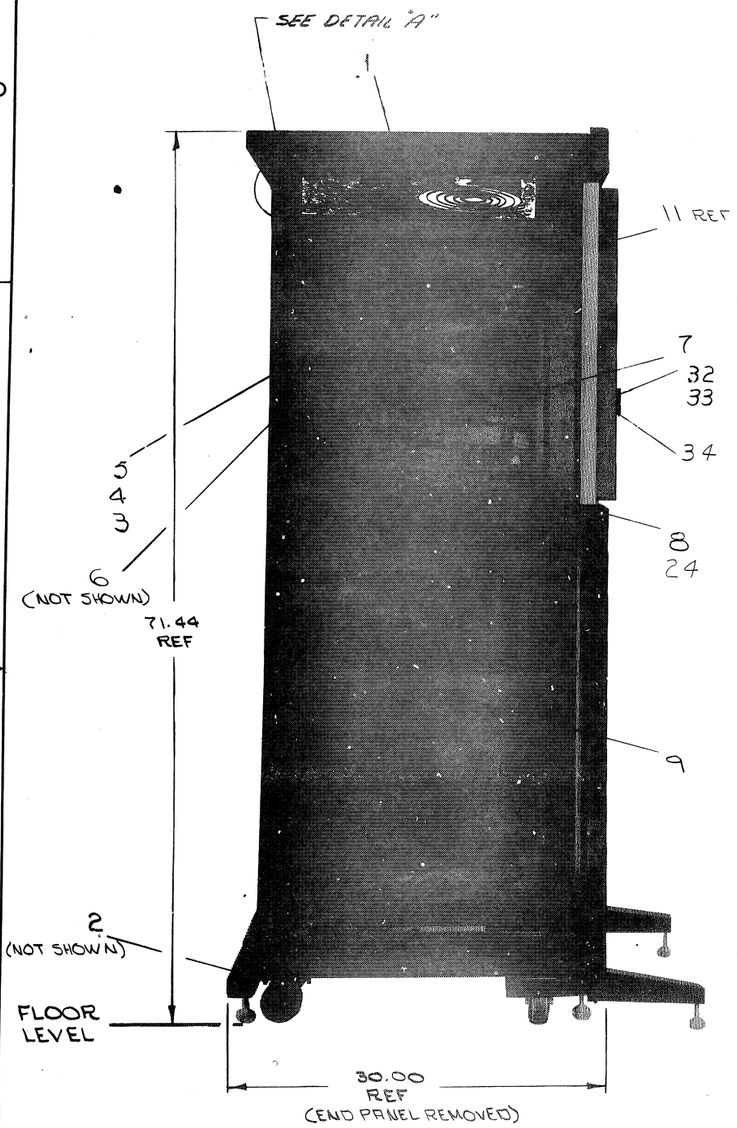

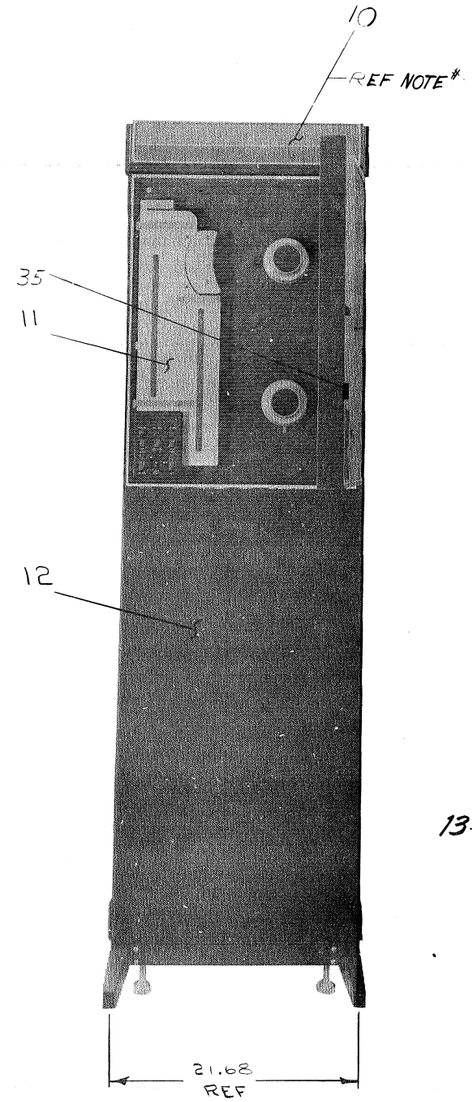

LEGEND	
NUMBER	VARIATION
TU1Ø-EA	9TRK MASTER 115V 6Ø HZ
TU1Ø-EB	9TRK MASTER 23ØV 6Ø HZ
TU1Ø-EC	9TRK MASTER 115V 5Ø HZ
TU1Ø-ED	9TRK MASTER 23ØV 5Ø HZ
TU1Ø-EE	9TRK SLAVE 115V 6Ø HZ
TU1Ø-EF	9TRK SLAVE 23ØV 6Ø HZ
TU1Ø-EH	9TRK SLAVE 115V 5Ø HZ
TU1Ø-EJ	9TRK SLAVE 23ØV 5Ø HZ
TU1Ø-FA	7TRK MASTER 115V 6Ø HZ
TU1Ø-FB	7TRK MASTER 23ØV 6Ø HZ
TU1Ø-FC	7TRK MASTER 115V 5Ø HZ
TU1Ø-FD	7TRK MASTER 23ØV 5Ø HZ
TU1Ø-FE	7TRK SLAVE 115V 6Ø HZ
TU1Ø-FF	7TRK SLAVE 23ØV 6Ø HZ
TU1Ø-FH	7TRK SLAVE 115V 5Ø HZ
TU1Ø-FJ	7TRK SLAVE 23Ø V 5Ø HZ

NOTE: TRK-TRACK

NOTES
1. TYPE OF LOGO (ITEM 10) IS TO BE DETERMINED BY SYSTEM REQUIRING TU1Ø UNIT.
2. FOR PARTS LIST REFER TO C-PL TU1Ø-Ø-Ø.

LOCATION OF TINNERMAN NUTS (ITEM 5)	
LOCATE ALL NUTS BY COUNTING HOLES UP FROM BOTTOM OF CABINET FRAME	
FRONT HOLE NUMBERS	
RIGHT SIDE 84, 85, 86 & 87	LEFT SIDE 84, 85, 86 & 87
LEFT SIDE HOLE NUMBERS	RIGHT SIDE HOLE NUMBERS
REAR: 84, 85, 86 & 87	REAR: 84, 85, 86 & 87
FRONT:	FRONT:

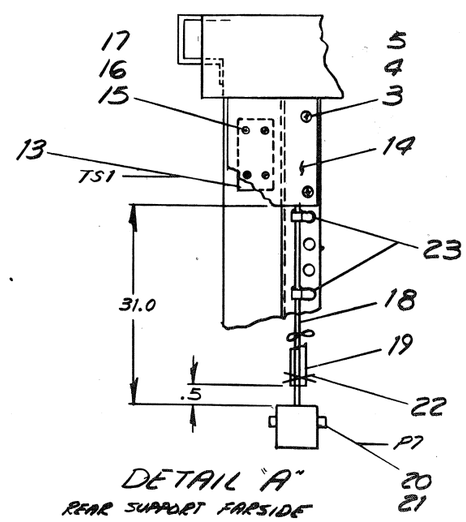

DETAIL "A"
REAR SUPPORT FARSIDE

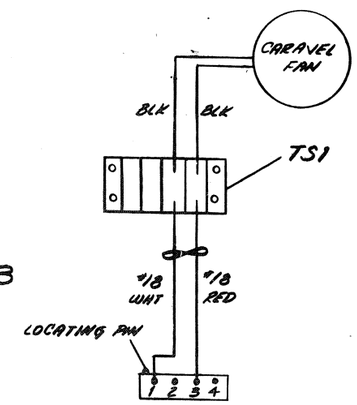

TO SOCKET HOUSING J7 ON H73Ø P.S.

REVISIONS			
CHK	CHANGE NO.		REV.
	TU10-00032		A
BARONE			
	TU10-00045		B
MORGANSTERN			
	TU10-00052		C
M. MORGANSTERN			
	TU10-00054		D
MORGANSTERN			
	TU10-00065		E
BARONE			

DEC FORM NO. P-100

FIRST USED ON OPTION/MODEL: TUIØ

DO NOT SCALE DRAWING
UNLESS OTHERWISE SPECIFIED
DIMENSION IN INCHES
TOLERANCES
FRACTIONS ± 1/64
ANGLES ± 0°30'
FINAL SURFACE QUALITY ✓
REMOVE BURRS AND BREAK SHARP CORNERS

MATERIAL —"—

FINISH —"—

		DATE
DRN	R. L. Blaine	31 Dec 70
CHK'D	J. F. Fleming	2-17-71
ENG	C. Gardner	2-22-71
PROJ. ENG.	C. Gardner	2-22-71
PROD.	B. E. Cross	2-23-71

NEXT HIGHER ASSY: A-ML-TU1Ø-EA

SCALE: NONE

SHEET: OF

QTY.	DESCRIPTION	PART NO.	ITEM NO.
	PARTS LIST		

digital EQUIPMENT CORPORATION
MAYNARD, MASSACHUSETTS

TITLE: TAPE TRANSPORT TU1Ø

SIZE	CODE	NUMBER	REV.
D	UA	TU1Ø-Ø-Ø	E

DIST. G

This drawing and specifications, herein, are the property of Digital Equipment Corporation and shall not be reproduced or copied or used in whole or in part as the basis for the manufacture or sale of items without written permission.

ITEM NO.	PART NO.	DESCRIPTION	EA-Ø	EB-Ø	EC-Ø	ED-Ø	EE-Ø	EF-Ø	EH-Ø	EJ-Ø	FA-Ø	FB-Ø	FC-Ø	FD-Ø	FE-Ø	FF-Ø	FH-Ø	FJ-Ø
1	C-PL-7006501-24-0	BASIC CAB. ASSEMBLY	1	1	1	1	1	1	1	1	1	1	1	1	1	1	1	1
2	D-UA-H95Ø-BA-Ø	FULL LENGTH DOOR H95Ø-BA	1	1	1	1	1	1	1	1	1	1	1	1	1	1	1	1
3	9006074-3	SCREW, PHL HD TRUSS #10-32 X 5/8 LG	18	18	18	18	18	18	18	18	18	18	18	18	18	18	18	18
4	9007651	LOCK WASHER #10 EXT. TOOTH	18	18	18	18	18	18	18	18	18	18	18	18	18	18	18	18
5	9007786	TINNERMAN NUT #10-32	18	18	18	18	18	18	18	18	18	18	18	18	18	18	18	18
6	9107673-16	POWER CORD (BLK) 16 FT. LG	1	1	1	1	1	1	1	1	1	1	1	1	1	1	1	1
7	D-IA-7408593-0-0	MODULE HOLD DOWN BAR	1	1	1	1	1	1	1	1	1	1	1	1	1	1	1	1
8	D-MU-TU1Ø-Ø-1B	MODULE UTILIZATION	1	1	1	1	-	-	-	-	-	-	-	-	-	-	-	-
9	D-UA-H952-AA-Ø	END PANELS, H952-A * *	A/R	A/R	A/R	A/R	A/R	A/R	A/R	A/R	A/R	A/R	A/R	A/R	A/R	A/R	A/R	A/R
10	D-IA-7407349-0-0	PANEL, LOGO * * *	1	1	1	1	1	1	1	1	1	1	1	1	1	1	1	1
11	D-AD-7006756-1-0	TRANSPORT ASSY 9 TRACK 115V 60 HZ	1	-	-	-	1	-	-	-	-	-	-	-	-	-	-	-
11	D-AD-7006756-2-0	TRANSPORT ASSY 9 TRACK 230V 60 HZ	-	1	-	-	-	1	-	-	-	-	-	-	-	-	-	-
11	D-AD-7006756-3-0	TRANSPORT ASSY 9 TRACK 115V 50HZ	-	-	1	-	-	-	1	-	-	-	-	-	-	-	-	-
11	D-AD-7006756-4-0	TRANSPORT ASSY 9 TRACK 230V 50 HZ	-	-	-	1	-	-	-	1	-	-	-	-	-	-	-	-
11	D-AD-7006756-5-0	TRANSPORT ASSY 7 TRACK 115V 60 HZ	-	-	-	-	-	-	-	-	1	-	-	-	1	-	-	-
11	D-AD-7006756-6-0	TRANSPORT ASSY 7 TRACK 230V 60 HZ	-	-	-	-	-	-	-	-	-	1	-	-	-	1	-	-
11	D-AD-7006756-7-0	TRANSPORT ASSY 7 TRACK 115V 50 HZ	-	-	-	-	-	-	-	-	-	-	1	-	-	-	1	-
11	D-AD-7006756-8-0	TRANSPORT ASSY 7 TRACK 230V 50 HZ	-	-	-	-	-	-	-	-	-	-	-	1	-	-	-	1
12	D-UA-H95Ø-JD-Ø	MIDDLE DOORS, H95Ø-JD	1	1	1	1	1	1	1	1	1	1	1	1	1	1	1	1
13	9006988	TERMINAL STRIP #4-141 CINCH JONES	1	1	1	1	1	1	1	1	1	1	1	1	1	1	1	1
14	C-MD-7407607-0-0	PLATE, JONES STRIP	1	1	1	1	1	1	1	1	1	1	1	1	1	1	1	1
15	9006025-1	SCR PHL HD PAN #6-32 X 5/8 LG	4	4	4	4	4	4	4	4	4	4	4	4	4	4	4	4
16	9007649	WASHER EXT TOOTH #6	4	4	4	4	4	4	4	4	4	4	4	4	4	4	4	4
17	9006560	KEPS NUT #6-32	4	4	4	4	4	4	4	4	4	4	4	4	4	4	4	4
18	9107430-29	WIRE #18 AWG TWP RED & WHT	A/R	A/R	A/R	A/R	A/R	A/R	A/R	A/R	A/R	A/R	A/R	A/R	A/R	A/R	A/R	A/R
19	9107243	TUBING ASTRA SUFLEX #1 BLK	A/R	A/R	A/R	A/R	A/R	A/R	A/R	A/R	A/R	A/R	A/R	A/R	A/R	A/R	A/R	A/R
20	1209378	CONTACT #60620-1 AMP	2	2	2	2	2	2	2	2	2	2	2	2	2	2	2	2
21	1209350-03	CONN #1-480305-0 MATE-N-LOCK	1	1	1	1	1	1	1	1	1	1	1	1	1	1	1	1
22	9007031	TIEWRAP SST-1B PANDUIT	1	1	1	1	1	1	1	1	1	1	1	1	1	1	1	1
23	9007867	PUSH MOUNT #PM2H25M PANDUIT	2	2	2	2	2	2	2	2	2	2	2	2	2	2	2	2
~~24~~	~~D-AD-7005501-1-0~~	~~TRANS ASSY~~	~~0~~	~~1~~	~~0~~	~~1~~	~~0~~	~~1~~	~~0~~	~~1~~	~~0~~	~~1~~	~~0~~	~~1~~	~~0~~	~~1~~	~~0~~	~~1~~
~~25~~	~~1209351-03~~	~~MALE MATE'N'LOK~~	~~0~~	~~1~~	~~0~~	~~1~~	~~0~~	~~1~~	~~0~~	~~1~~	~~0~~	~~1~~	~~0~~	~~1~~	~~0~~	~~1~~	~~0~~	~~1~~
~~26~~	~~1209350-03~~	~~FEMALE MATE'N'LOK~~	~~0~~	~~1~~	~~0~~	~~1~~	~~0~~	~~1~~	~~0~~	~~1~~	~~0~~	~~1~~	~~0~~	~~1~~	~~0~~	~~1~~	~~0~~	~~1~~
~~27~~	~~1209378-01~~	~~MALE PIN~~	~~0~~	~~2~~	~~0~~	~~2~~	~~0~~	~~2~~	~~0~~	~~2~~	~~0~~	~~2~~	~~0~~	~~2~~	~~0~~	~~2~~	~~0~~	~~2~~
~~28~~	~~1209379-01~~	~~FEMALE PIN~~	~~0~~	~~2~~	~~0~~	~~2~~	~~0~~	~~2~~	~~0~~	~~2~~	~~0~~	~~2~~	~~0~~	~~2~~	~~0~~	~~2~~	~~0~~	~~2~~
~~29~~	~~9007880~~	~~TIE WRAP~~		~~A/R~~		~~A/R~~		~~A/R~~		~~A/R~~		~~A/R~~		~~A/R~~		~~A/R~~		~~A/R~~
~~30~~	~~9107430-09~~	~~BLK & WHT TWP #18~~		~~A/R~~		~~A/R~~		~~A/R~~		~~A/R~~		~~A/R~~		~~A/R~~		~~A/R~~		~~A/R~~
31	1209351 04	CONN 4PIN MATE-N-LOCK	1	1	1	1	1	1	1	1	1	1	1	1	1	1	1	1
32	C-IA-7409373-0-0	SPECIAL LOGO (TU10 9CH)	1	1	1	1	1	1	1	1	-	-	-	-	-	-	-	-
33	C-IA-7409294-0-0	SPECIAL LOGO (TU10 7CH)	-	-	-	-	-	-	-	-	1	1	1	1	1	1	1	1
34	1210682	UNIVERSAL NAMEPLATE	1	1	1	1	1	1	1	1	1	1	1	1	1	1	1	1
35	9008294	CLIP, TINNERMAN	2	2	2	2	2	2	2	2	2	2	2	2	2	2	2	2
36	BCØ8A-10	MYLAR CABLE	-	-	-	-	*	*	*	*	-	-	-	-	*	*	*	*
37	BCØ8C-10	MYLAR CABLE	-	-	-	-	*	*	*	*	-	-	-	-	*	*	*	*
38	BCØ8N-10	ROUND COAX CABLE	-	-	-	-	*	*	*	*	-	-	-	-	*	*	*	*
39	BCØ8P-10	ROUND COAX CABLE	-	-	-	-	*	*	*	*	-	-	-	-	*	*	*	*

REVISIONS

REV.	CHANGE NO.	CHK
A	TU10-00032 BARDONE	J. Bardone 5/7/71
B	TU10-00045 M. MORGANSTERN	E. Wilson 8-9-71 for M. Morganstern
C	TU10-00052 M. MORGANSTERN	M. Morganstern 10-18-71
D	TU10-00054 MORGANSTERN	M. Morganstern 12-21-71
E	TU10-00065 BARDONE	J. Bardone 8-9-72

FIRST USED ON OPTION/MODEL: TU1Ø

* SEE ACCESSORY LIST FOR QUANTITIES

** ONLY USED ON FREE STANDING CABNETS

*** TYPE OF LOGO TO BE DETERMINE BY SYSTEM USING TU10

~~UNLESS OTHERWISE SPECIFIED DIMENSION IN INCHES TOLERANCES DECIMALS ± .005 FRACTIONS ± 1/64 ANGLES ± 0°30' FINAL SURFACE QUALITY ✓ REMOVE BURRS AND BREAK SHARP CORNERS~~

MATERIAL —

FINISH —

DRN.	PJ LEBLANC	DATE 12-31-70
CHK'D.	J. FLEMING	DATE 2-1-71
ENG.	J. Bardone	DATE 2-22-71
PROJ. ENG.	J. Bardone	DATE 2-22-71
PROD.	B. E. Cross	DATE 2-23-71

NEXT HIGHER ASSY. A-ML-TU1Ø-Ø

SCALE —

SHEET 1 OF 1

digital EQUIPMENT CORPORATION MAYNARD, MASSACHUSETTS

TITLE: TAPE TRANSPORT TU1Ø

SIZE	CODE	NUMBER	REV.
C	PL	TU1Ø-Ø-Ø	E

DIST.

DEC FORM NO. DRC 110

This drawing and specifications, herein, are the property of Digital Equipment Corporation and shall not be reproduced or copied or used in whole or in part as the basis for the manufacture or sale of items without written permission. 1973

TAPE TRANSPORT 9 TRACK MASTER 115V 60∽ D-UA-TU10-EA-Ø	TAPE TRANSPORT 9 TRACK MASTER 230V 60∽ D-UA-TU10-EB-Ø	TAPE TRANSPORT 9 TRACK MASTER 115V 50∽ D-UA-TU10-EC-Ø	TAPE TRANSPORT 9 TRACK MASTER 230V 50∽ D-UA-TU10-ED-Ø
TAPE TRANSPORT 9 TRACK SLAVE 115V 60∽ D-UA-TU10-EE-Ø	TAPE TRANSPORT 9 TRACK SLAVE 230V 60∽ D-UA-TU10-EF-Ø	TAPE TRANSPORT 9 TRACK SLAVE 115V 50∽ D-UA-TU10-EH-Ø	TAPE TRANSPORT 9 TRACK SLAVE 230V 50∽ D-UA-TU10-EJ-Ø
TAPE TRANSPORT 7 TRACK MASTER 115V 60∽ D-UA-TU10-FA-Ø	TAPE TRANSPORT 7 TRACK MASTER 230V 60∽ D-UA-TU10-FB-Ø	TAPE TRANSPORT 7 TRACK MASTER 115V 50∽ D-UA-TU10-FC-Ø	TAPE TRANSPORT 7 TRACK MASTER 230V 50∽ D-UA-TU10-FD-Ø
TAPE TRANSPORT 7 TRACK SLAVE 115V 60∽ D-UA-TU10-FE-Ø	TAPE TRANSPORT 7 TRACK SLAVE 230V 60∽ D-UA-TU10-FF-Ø	TAPE TRANSPORT 7 TRACK SLAVE 115V 50∽ D-UA-TU10-FH-Ø	TAPE TRANSPORT 7 TRACK SLAVE 230V 50∽ D-UA-TU10-FJ-Ø

(1)

(2) BASIC CAB ASSY
C-PL-7006501-24-0

(3) CAB FRAME 19
A-PL-7006478-0-0

(4) H950-AA
19 FRAME ASSY
E-UA-H950-A -Ø
D-DI-H950-Ø-1

(5) H952-E
CASTER SET
A-PL-H952-E-Ø
D-DI-H952-0-1

(6) H952-F
LEVELER SET
A-PL-H952-F-Ø
D-DI-H952-Ø-1

(7) H952-C
FAN
A-PL-H952-C-Ø
D-DI-H952-Ø-1

(8) H950-S
FILTER
A-PL-H950-S-Ø
D-DI-H950-0-1

(9) H952-B
STABILIZER FEET
A-PL-H952-B-Ø
D-DI-H952-0-1

(10) H952-AA
END PANELS
D-UA-H952-A -Ø
D-DI-H952-0-1

(11) H950-BA FULL
LENGTH DOOR
D-UA-H950-B -Ø
D-DI-H950-Ø-1

(12) LOGO PANEL
D-IA-7407349-0-0

(13) PANEL FRAME
C-UA-H950-L -Ø
D-DI-H950-Ø-1

(14) PANEL INLAY
D-IA-7407348-0-0

(15) H950-JD
MIDDLE DOOR
D-UA-H950-J -Ø
D-DI-H950-Ø-1

(16)

TAPE TRANSPORT ASSY 9 TRACK 115V 60∽ D-AD-7006756-1-0	TAPE TRANSPORT ASSY 9 TRACK 230V 60∽ D-AD-7006756-2-0	TAPE TRANSPORT ASSY 9 TRACK 115V 50∽ D-AD-7006756-3-0	TAPE TRANSPORT ASSY 9 TRACK 230V 50∽ D-AD-7006756-4-0
TAPE TRANSPORT ASSY 7 TRACK 115V 60∽ D-AD-7006756-5-0	TAPE TRANSPORT ASSY 7 TRACK 230V 60∽ D-AD-7006756-6-0	TAPE TRANSPORT ASSY 7 TRACK 115V 50∽ D-AD-7006756-7-0	TAPE TRANSPORT ASSY 7 TRACK 230V 50∽ D-AD-7006756-8-0

(17) UNIT DOOR ASSY
D-AD-7006743-0-0

(18) POWER SUPPLY
D-UA-H730-Ø-Ø
D-DI-H730-Ø-2

(19) CONTROL BOX ASSY
D-AD-7006757-0-0

(20) CONTROL PANEL
C-IA-7407945-0-0

(21) CONTROL BOX
CABLE ASSY
D-IA-7007057-0-0

(22) CONTROL PANEL
BOARD ASSY
E-IA-5408926-0-0

(23) CONTROL PANEL
ETCH BOARD
E-IA-5008925-0-0

(24) HEAD PLATE ASSY
(NINE TRACK)
D-AD-7006758-1-0

HEAD PLATE ASSY
(SEVEN TRACK)
D-AD-7006758-2-0

(25) LOGIC ASSY
TU10
C-AD-7006754-0-0

(26) WIRED ASSY
D-AD-7006755-0-0

(27) H911 MTG PANEL
D-AD-5404491-0-0

(28) CASTING ASSY
1943
D-AD-5302483-0-0

(29) CAPSTAN SERVO
POWER AMPLIFIER
H603
E-UA-H603-Ø-Ø

(30) POWER AMPLIFIER
ETCH BOARD
E-IA-5009101-0-0

(31) MAIN
POWER HARNESS
E-IA-7007177-0-0

(32) SPECIAL LOGO
(TU10 9CH)
C-IA-7409373-0-0

(33) SPECIAL LOGO
(TU10 7CH)
C-IA-7409294-0-0

REVISIONS				
CHK	CHANGE NO.	REV		
	TU10-00032	A		
BARDONE				
	TU10-00034	B		
BARDONE				
	TU10-00044	C		
J. BARDONE				
	TU20-00045	D		
M. MORGANSTERN				
	TU10-00052	E		
M. MORGANSTERN				
	TU10-00054	F		
MORGANSTERN				
	TU10-00055	H		
HESS				
	TU10-00056	J		
J. BARDONE				
RB	MISC-00094	K		
R. BERNIER				
	TU10-00068	L		
J. BARDONE				
	TU10-00073	M		
B. FITZGERALD				
	TU10-00081	N		
V. DEMPSEY				

DEC FORM NO DRD 102A

FIRST USED ON OPT/MOD	QTY.	DESCRIPTION	PART NO.	ITEM NO.
TU10		PARTS LIST		

UNLESS OTHERWISE SPECIFIED

UNLESS OTHERWISE SPECIFIED
DIMENSION IN INCHES
TOLERANCES
DECIMALS ± .005 FRACTIONS ± 1/64 ANGLES ± 0°30'
FINAL SURFACE QUALITY / REMOVE BURRS AND BREAK SHARP CORNERS

MATERIAL

FINISH

DRN.		DATE 12-31-70
CHK'D.		DATE 2-19-71
ENG.	J. Bardone	DATE 2/22/71
PROJ. ENG.	J. Bardone	DATE 2/22/71
PROD.	G. Elson	DATE 2/23/71

NEXT HIGHER ASSY: D-UA-TU10-Ø-Ø

SCALE

SHEET 1 OF 3

digital EQUIPMENT CORPORATION
MAYNARD MASSACHUSETTS

TITLE: DRAWING INDEX LIST TU10

SIZE D CODE DI NUMBER TU10-Ø-1 REV N

DIST. 6

This drawing and specifications, herein, are the property of Digital Equipment Corporation and shall not be reproduced or copied or used in whole or in part as the basis for the manufacture or sale of items without written permission. 1973

N | D DI TU10-Ø-1 | 2

MECHANICAL

FIND NO.	DESCRIPTION	PART NO.	PROD	CUST	F/C
1.	TAPE TRANSPORT ASSY'S TU10	D-UA-TU1Ø-Ø-Ø			
	TAPE TRANSPORT ASSY'S (PL)	C-PL-TU1Ø-Ø-Ø			
	HOLD DOWN BAR	D-DI-7408593-0-0			
	SINGLE BAY CUSHIONED CRATING	A-PL-3700046-0-0			
	UNIVERSAL NAMEPLATE	A-PS-1210682			
2.	BASIC CAB ASSY	C-PL-7006501-0-0			
	KICK PLATE	C-MD-7406782-0-0			
	SHIPPING SKID CUSHIONED	D-PS-1210568-0-0			
	~~FRAME MTG DOOR ASSY~~	~~E-IA-7406705-0-0~~			
	~~FILLER STRIP, FRONT~~	~~C-IA-7406748-0-0~~			
	~~FILLER STRIP, REAR~~	~~C-IA-7406749-0-0~~			
	~~BUSHING, PIVOT~~	~~B-MD-7406702-0-0~~			
	~~PIN, DOOR RETAINER~~	~~B-MD-7406670-0-0~~			
	~~PIN, DOOR~~	~~B-MD-7406671-0-0~~			
	~~PIN, DOOR~~	~~B-MD-7406672-0-0~~			
3.	CAB FRAME ASSY 19	A-PL-7006478-0-0			
4.	H950-AA FRAME ASSY	E-UA-H95Ø-A-Ø			
	H95Ø-AA FRAME ASSY (PL)	A-PL-H95Ø-A-Ø			
	DWG INDEX H950	D-DI-H95Ø-Ø-1			
5.	CASTER SET H952-E	A-PL-H952-E-Ø			
	DWG INDEX H952	D-DI-H952-Ø-1			
6.	H952-F LEVELER SET	A-PL-H952-F-Ø			
	DWG INDEX H952	D-DI-H952-Ø-1			
7.	H952-C FAN	A-PL-H952-C-Ø			
	DWG INDEX H952	D-DI-H952-Ø-1			
8.	H950-S FILTER	A-PL-H95Ø-S-Ø			
	DWG INDEX H950	D-DI-H95Ø-Ø-1			
9.	H952-B STABILIZER FEET	A-PL-H952-B-Ø			
	DWG INDEX H952	D-DI-H952-Ø-1			
10.	H952-AA END PANEL	D-UA-H952-A-Ø			
	H952-AA END PANEL (PL)	A-PL-H952-A-Ø			
	DWG INDEX H952	D-DI-H952-Ø-1			
11.	H950-BA FULL LENGTH DOOR	D-UA-H95Ø-B-Ø			
	H950-BA FULL LENGTH DOOR	A-PL-H950-B-Ø			
	DWG INDEX H950	D-DI-H950-Ø-1			
12.	LOGO PANEL ASSY	D-IA-7407349-0-0			
13.	H950-LA PANEL FRAME	C-UA-H950-L-Ø			
	H950-LA PANEL FRAME (PL)	A-PL-H950-L-Ø			
	H950 DRAWING INDEX	D-DI-H950-Ø-1			
14.	PANEL INLAY	C-IA-7407348-0-0			

MECHANICAL

FIND NO.	DESCRIPTION	PART NO.	PROD	CUST	F/C
15.	H950-JD MIDDLE DOOR	D-UA-H950-JD-Ø			
	H950-JD MIDDLE DOOR ASSY	A-PL-H95Ø-JD-Ø			
	DWG INDEX H950	D-DI-H95Ø-Ø-1			
16.	TAPE TRANS ASSY 7 AND 9 TRACK	D-AD-7006756-0-0			
	TAPE TRANSPORT ASSY (PL)	A-PL-7006756-0-0			
	DOOR CATCH	A-MD-7407973-0-0			
	CLIP DOOR STOP	B-MD-7407951-0-0			
	DECK PLATE (CAST)	E-SC-1209871-0-0			
	DECK PLATE (MACH)	E-IA-7407991-0-0			
	DECK FRAME	D-IA-7407989-0-0			
	VACUMN CHANNEL COVER	C-IA-7407990-0-0			
	SENSOR BRKT	B-MD-7407954-0-0			
	LOGIC BRACKET	C-MD-7407992-0-0			
	ROLLER CLAMP	B-MD-7407960-0-0			
	FLANGE COVER	C-MD-7411590-0-0			
	CAPSTAN (CASTING)	C-SC-1209882-0-0			
	CAPSTAN (MACH)	C-MD-7407957-0-0			
	CAPSTAN CLAMP	D-MD-7407958-0-0			
	SOLENOID SHAFT	D-MD-7407962-0-0			
	SOLENOID BRKT	D-MD-7407963-0-0			
	ADJUSTING BRACKET	C-MD-7407967-0-0			
	PLENUM (CAST)	E-SC-1209874-0-0			
	PLENUM (MACH)	E-MD-7407988-0-0			
	MOTOR CLEAT	C-MD-7407987-0-0			
	HEAD COVER (CAST)	C-SC-1209875-0-0			
	HEAD COVER (MACH)	C-MD-7407986-0-0			
	STANDOFF	A-MD-7407995-0-0			
	STANDOFF PLATE	A-MD-7407994-0-0			
	COVER BRACE	B-IA-7407966-0-0			
	COVER HINGE (TOP)	B-MD-7408002-0-0			
	COVER HINGE (BOTTOM)	B-IA-7407993-0-0			
	BUFFER COLUMN GLASS	D-SC-1209918-0-0			
	BUFFER COLUMN GLASS	D-SC-1209919-0-0			
	BUFFER COLUMN COVER	D-MD-7407969-0-0			
	COVER HOLD DOWN	B-IA-7407939-0-0			
	PIVOT SHAFT HINGE	B-MD-7407965-0-0			
	KNOB (CAST)	C-SC-1209872-0-0			
	KNOB (MACH)	C-MD-7407979-0-0			
	SUPPORT REEL (CAST)	C-SC-1209873-0-0			
	SUPPORT REEL (MACH)	C-MD-7407980-0-0			
	PRESSURE PLATE	B-MD-7407982-0-0			
	GUIDE, REEL	B-MD-7407983-0-0			
	KEY	A-MD-7407984-0-0			
	AIR PLUG	B-MD-7407996-0-0			
	SHIPPING BRACKET	C-MD-7407997-0-0			
	DECORATIVE DISC	C-SC-1209212-0-0			
	CONN MTG. BRACKET	B-MD-7408481-0-0			
	TU1Ø DECK CASTING	A-PI-3700044-0-0			
	INTER PLANT SHIPPING FOAM CLEAT	B-MD-7409176-0-0			
	(FIXTURES REF.)				
	ROLLER GUIDE GAGE BLOCK	B-MD-9605460-0-0			
	READ-WRITE SETUP GAGE	B-MD-9605494-0-0			
	READ-WRITE REEL SETUP GAGE	B-MD-9605493-0-0			
	HUB GAGE	C-IA-9605461-0-0			
	PAINT FIXTURE (DECK PLATE)	D-AD-9305187-0-0			
	CAPSTAN	B-MD-9605606-0-0			
	PLENUM COVER	C-MD-7409603-0-0			
	DEFLECTOR	B-MD-7409602-0-0			
17.	UNIT DOOR ASSY	D-AD-7006743-0-0			
	UNIT DOOR ASSY (PL)	A-PL-7006743-0-0			
	DOOR SUPPORT	B-MD-7407971-0-0			
	DOOR LATCH	B-MD-7407972-0-0			

MECHANICAL

FIND NO.	DESCRIPTION	PART NO.	PROD	CUST	F/C
17.	DOOR BUTTON	A-MD-7407970-0-0			
	DOOR STOP	A-MD-7407976-0-0			
	LATCH PLATE	B-IA-7407974-0-0			
	SHORT CLAMP	A-MD-7407975-0-0			
	WINDOW CLAMP	A-MD-7407977-0-0			
	WINDOW	B-MD-7407964-0-0			
	DOOR STOP BLOCK	A-MD-7407940-0-0			
	UNIT DOOR	D-MD-7408003-0-0			
	DOOR FOAM	B-MD-7408879-0-0			
	BLOCK, DOOR STOP	B-PS-1210367-0-0			
18.	POWER SUPPLY H73Ø ASSY	D-UA-H73Ø-Ø-Ø			
	POWER SUPPLY H73Ø (PL)	A-PL-H73Ø-Ø-Ø			
	DRAWING INDEX	D-DI-H73Ø-Ø-2			
19	CONTROL BOX ASSY	D-AD-7006757-0-0			
	CONTROL BOX ASSY (PL)	A-PL-7006757-0-0			
	CONTROL BOX	D-IA-7407942-0-0			
	PANEL SUB PLATE	C-MD-7407941-0-0			
	DIGI SWITCH BRKT	A-MD-7407938-0-0			
	EGG CRATE	D-MD-7407937-0-0			
	PANEL CLIP	C-IA-7408000-0-0			
	EGG CRATE	D-PS-1210366-0-0			
20.	CONTROL PANEL	C-IA-7407945-0-0			
	CONTROL PANEL SILK SCREEN	B-SS-7407945-0-1			
	CONTROL PANEL SILK SCREEN	B-SS-7407945-0-2			
21.	CONTROL BOX CABLE ASSY	D-IA-7007057-0-0			
22.	CONTROL PANEL BD ASSY	E-IA-5408926-0-0			
23.	CONTROL PANEL ETCH BD	E-IA-5008925-0-0			
	PRINTED CIRCUIT	PC-5008925-0-0			
24.	HEAD PLATE ASSY 7 AND 9 TRACK	D-AD-7006758-0-0			
	HEAD PLATE ASSY (PL)	A-PL-7006758-0-0			
	HEAD MTG PLATE (CASTING)	D-SC-1209876-0-0			
	HEAD MTG PLATE (MACH)	E-MD-7407953-0-0			
	ADJUSTABLE TAPE GUIDE	B-MD-7407950-0-0			
	CLAMP WASHER	A-MD-7407949-0-0			
	TAPE CLEANER	D-IA-7407998-0-0			
	(FIXTURES REF)				
	HEAD ALIGNMENT FIXTURE ASSY	D-AD-9305240-0-0			

MECHANICAL

FIND NO.	DESCRIPTION	PART NO.	PROD	CUST	F/C
25.	LOGIC ASSY	C-AD-7006754-0-0			
	LOGIC ASSY (PL)	A-PL-7006754-0-0			
	POWER END PLATE	C-IA-5404490-0-0			
	LEFT END PANEL	C-MD-5302485-0-0			
26.	WIRED ASSY	D-AD-7006755-0-0			
	WIRED ASSY (PL)	A-PL-7006755-0-0			
	LOGIC FRAME DECALS	B-DC-5308753-2-0			
	LOGIC FRAME DECALS	B-DC-5308753-4-0			
27.	H911 MOUNTING PANEL ASSY	D-AD-5404491-0-0			
	H911 MOUNTING PANEL ASSY	A-PL-5404491-0-0			
	288 PIN BLOCK H803	E-SC-1205348-0-0			
28.	CASTING ASSY (1943)	D-AD-5302483-0-0			
	CASTING ASSY (1943) (PL)	A-PL-5302483-0-0			
	1943 CASTING	E-MD-1202885-0-0			
29.	CAPSTAN SERVO POWER AMPL	E-UA-H6Ø3-Ø-Ø			
	POWER AMPLIFIER MTG BRKT	C-MD-5509026-0-0			
30.	POWER AMPLIFIER ETCH BD	E-IA-5009101-0-0			
	PRINTED CIRCUIT	PC-5009101-0-0			
31.	MAIN POWER HARNESS	E-IA-7007177-0-0			
	POWER CABLE	D-IA-7007250-0-0			
~~32.~~	~~TRANSFORMER PNL ASSY~~	~~D-AD-7005501-0-0~~			
	~~TRANSFORMER PNL ASSY (PL)~~	~~A-PL-7005501-0-0~~			
	~~TRANSFORMER PANEL~~	~~E-IA-7406064-0-0~~			
	~~COVER, PROT 4 TERM~~	~~B-MD-7404721-0-0~~			
32.	SPECIAL LOGO (TU10 9CH)	C-IA-7409373-0-0			
	SILK SCREEN	A-SS-7409373-0-1			
33.	SPECIAL LOGO (TU10 7CH)	C-IA-7409294-0-0			
	SILK SCREEN	A-SS-7409294-0-1			

REVISIONS		
REV.	CHANGE NO.	CHK

FIRST USED ON OPTION/MODEL	—//—
DRN. Berozzi	DATE 12/3/70
CHKD.	DATE 2/19/71
ENG. Barbone	DATE 2/22/71
PROJ. ENG. Barbone	DATE 2/22/71
PROD. E. Gnn	DATE 2/23/71
NEXT HIGHER ASSY	—//—
SCALE	—/—
SHEET 2 OF 3	

digital EQUIPMENT CORPORATION MAYNARD, MASSACHUSETTS

TITLE DRAWING INDEX LIST TU1Ø

SIZE	CODE	NUMBER	REV.
D	DI	TU1Ø-Ø-1	N

DIST.

DEC FORM NO. DRD 100

This drawing and specifications, herein, are the property of Digital Equipment Corporation and shall not be reproduced or copied or used in whole or in part as the basis for the manufacture or sale of items without written permission.

ELECTRICAL			DEPT USAGE		
FIND NO.	DESCRIPTION	PART NO.	PROD	CUST	F/C
1.	TAPE TRANSPORT ASSY 7 & 9 TRACK	A-ML-TU10-0			
	WIRE LIST	K-WL-TU10-0-2			
	MOTOR CONTROL (MASTER/SLAVE)	D-BS-TU10-0-3			
	CONNECTORS/INDICATORS (M/S)	D-BS-TU10-0-4			
	COMMAND LOGIC (MASTER/SLAVE)	D-BS-TU10-0-5			
	MOTION LOGIC (MASTER/SLAVE)	D-BS-TU10-0-6			
	BUS LOGIC (MASTER/SLAVE)	D-BS-TU10-0-7			
	READ WRITE TIMING LOGIC (M/S)	D-BS-TU10-0-8			
	WRITE CIRCUITRY (MASTER/SLAVE)	D-BS-TU10-0-9			
	READ CIRCUITRY (MASTER/SLAVE)	D-BS-TU10-0-10			
	MODULE UTILIZATION (SLAVE)	D-MU-TU10-0-11			
	MODULE UTILIZATION (PL)	A-PL-TU10-0-11			
	MASTER BUS DRIVERS & INTERCONN	D-BS-TU10-0-12			
	MODULE UTILIZATION (MASTER)	D-MU-TU10-0-18			
	MODULE UTILIZATION (PL)	A-PL-MU-TU10-0-18			
	TU10 ACCEPTANCE CRITERIA	A-SP-TU10-0-19			
	TU10 ASSY & TEST PROCEDURE	A-SP-TU10-0-20			
	ACCESSORY LIST	A-AL-TU10-0-21			
	HEAD MTG PLATE ASSY PROC	A-SP-TU10-0-22			
	UNIT ASSY PROC (MECH)	A-SP-TU10-0-23			

ELECTRICAL			DEPT USAGE		
FIND NO.	DESCRIPTION	PART NO.	PROD	CUST	F/C
16.	TAPE TRANSPORT ASSY'S	D-AD-7006756-0-0			
	TAPE TRANSPORT ASSY'S (PL)	A-PL-7006756-0-0			
18.	POWER SUPPLY H730	A-ML-H730-0			
19.	CONTROL BOX ASSY	D-AD-7006757-0-0			
	CONTROL BOX ASSY	A-PL-7006757-0-0			
	CONTROL BOX TESTER	D-CS-7006757-0-2			
	TEST PROCEDURE	A-SP-7006757-0-3			
22.	CONTROL PANEL CIRCUIT SCHEMATIC	D-CS-5408926-0-0			
26.	WIRED ASSY	D-AD-7006755-0-0			
	WIRED ASSY (PL)	A-PL-7006755-0-0			

MECHANICAL			DEPT USAGE		
FIND NO.	DESCRIPTION	PART NO.	PROD	CUST	F/C
16 CONT	CLAMP ROLLER SHAFT	B-PS-1210375-0-0			
	ANGLE SHAFT, SOLENOID	B-PS-1210372-0-0			
	BRACE, COVER	C-PS-1210369-0-0			
	HINGE, COVER BOTTOM	C-PS-1210370-0-0			
	HINGE, COVER TOP	B-PS-121[illegible]-0-0			
	RAMP COVER ROLLER, CSTG	C-PS-121[illegible]-0-0			
	CATCH, DOOR	B-PS-1210368-0-0			
	CLAMP, CAPSTAN	D-PS-1210374-0-0			

			DEPT USAGE		
FIND NO.	DESCRIPTION	PART NO.	PROD	CUST	F/C

REVISIONS		
CHK.	CHANGE NO.	REV.

FIRST USED ON OPTION/MODEL: —

DRN. PIEROZZI	DATE 12-3-70	digital EQUIPMENT CORPORATION MAYNARD, MASSACHUSETTS
CHK'D. K. RUSS	DATE 2-19-71	TITLE DRAWING INDEX LIST
ENG. J. BARDONE	DATE 2-22-71	
PROJ. ENG. J. BARDONE	DATE 2-22-71	
PROD. B.E. CROSS	DATE 2-23-71	
NEXT HIGHER ASSY —		
SCALE —		SIZE D CODE DI NUMBER TU10-0-1 REV. N
SHEET 3 OF 3		DIST.

DEC FORM NO. DRD 100

SIZE D CODE DI NUMBER TU10-0-1 REV. N