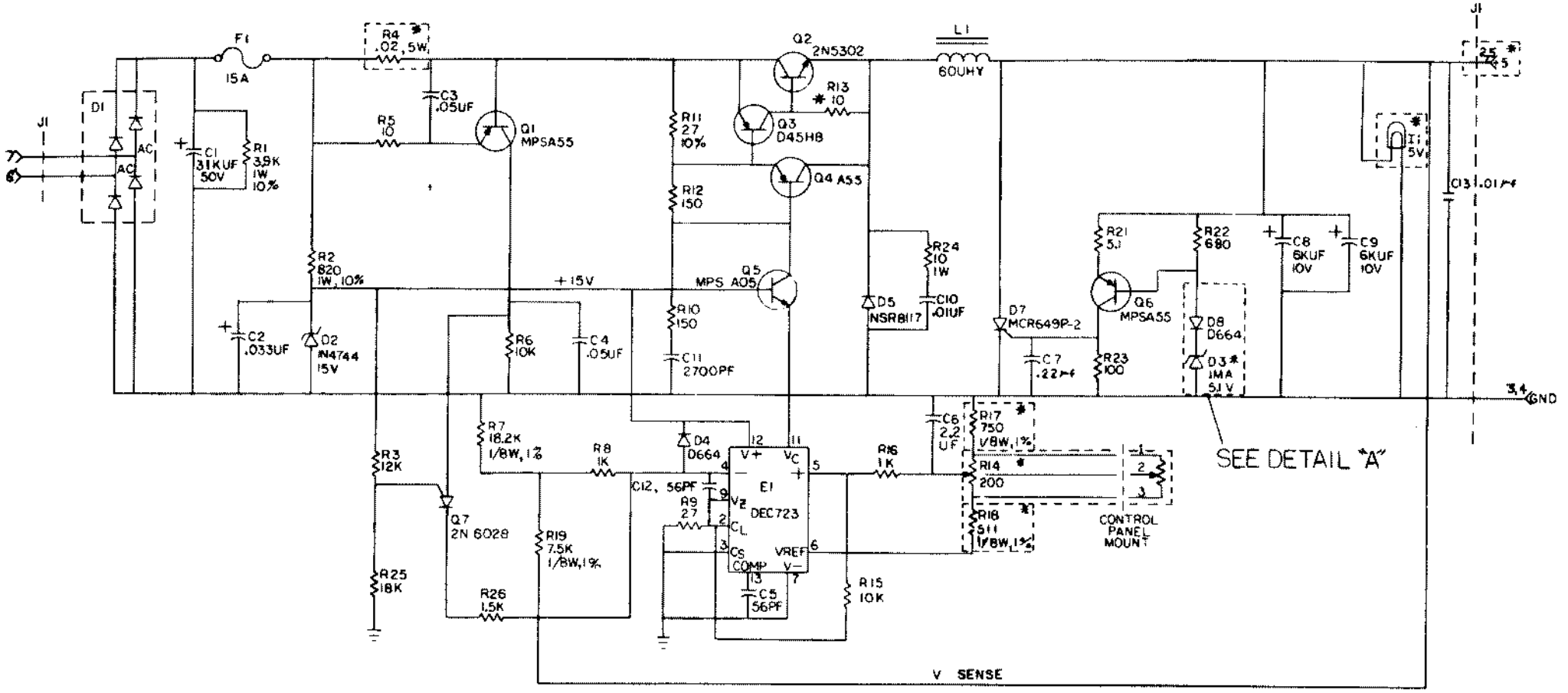

*FUSIBLE RESISTOR

(*) FOR YA VARIATION COMPONENT VALUES
ARE AS FOLLOWS:
R4 - .06 5W
R14 - 1K 10 TURN
R17 - 300 1/8W 1%
R19 - 150 1/4W 5%
D3 - 1N754
I1 - 15V
J1-2,5 +2.0-8.0V

* D9 - D664 ADDED FOR YA VARIATION ONLY

UNLESS OTHERWISE INDICATED:

RESISTORS ARE 1/4W, 5%