11 SYSTEMS COURSE

TRAINING DRAWINGS

TITLE	PAGE
PDP11 CPU/MEMORY/PERIPHERAL BLOCK DIAGRAM	2
PDP11 MEMORY ADDRESS INTERPRETATION	3
PDP11 ADDRESS MAP	3
BUS TRANSACTION TIMING DIAGRAMS	4
PDP 11/40 BLOCK DIAGRAM	5
PDP 11/45 BLOCK DIAGRAM	6,7
PDP11 SYSTEM BLOCK DIAGRAM	8
DL11 ASYNCHRONOUS LINE INTERFACE SCHEMATICS	9-20
PC11 READER/PUNCH INTERFACE SCHEMATICS	21-24
PC05 PAPER TAPE READER/PUNCH SCHEMATICS	25-34
LP11 LINE PRINTER INTERFACE	35-40
RK11-D BLOCK DIAGRAM	41
RK11-D DRIVE CONTROL SCHEMATICS	42-70
RK05 DISK DRIVE BLOCK DIAGRAM	71
RK05 DISK DRIVE SCHEMATICS	72-102
RK11-D WIRE LIST	103-117

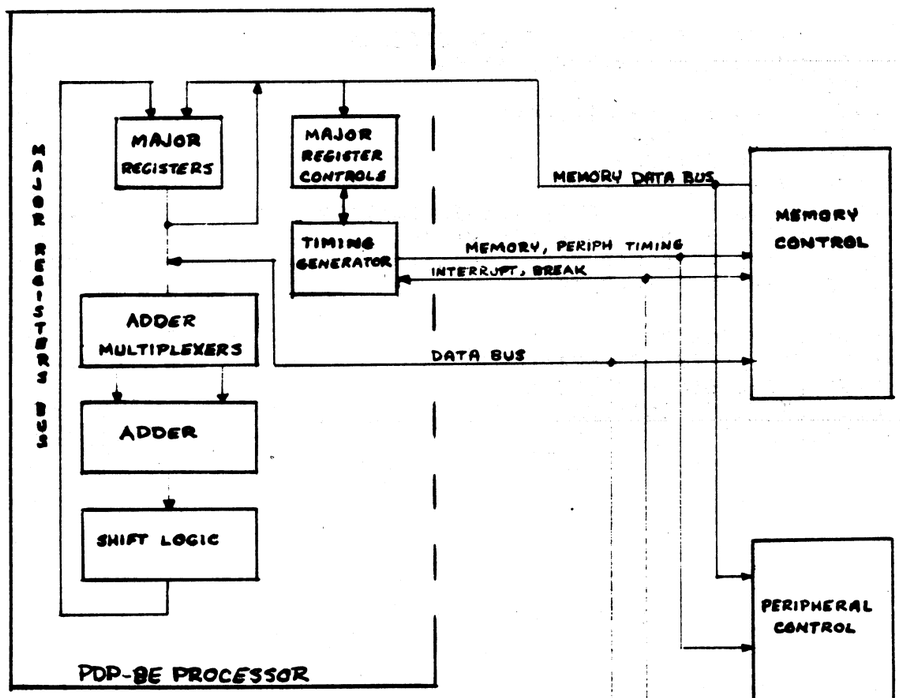

Fig 1. PDP8E CPU/MEMORY/PERIPHERAL BLOCK DIAGRAM

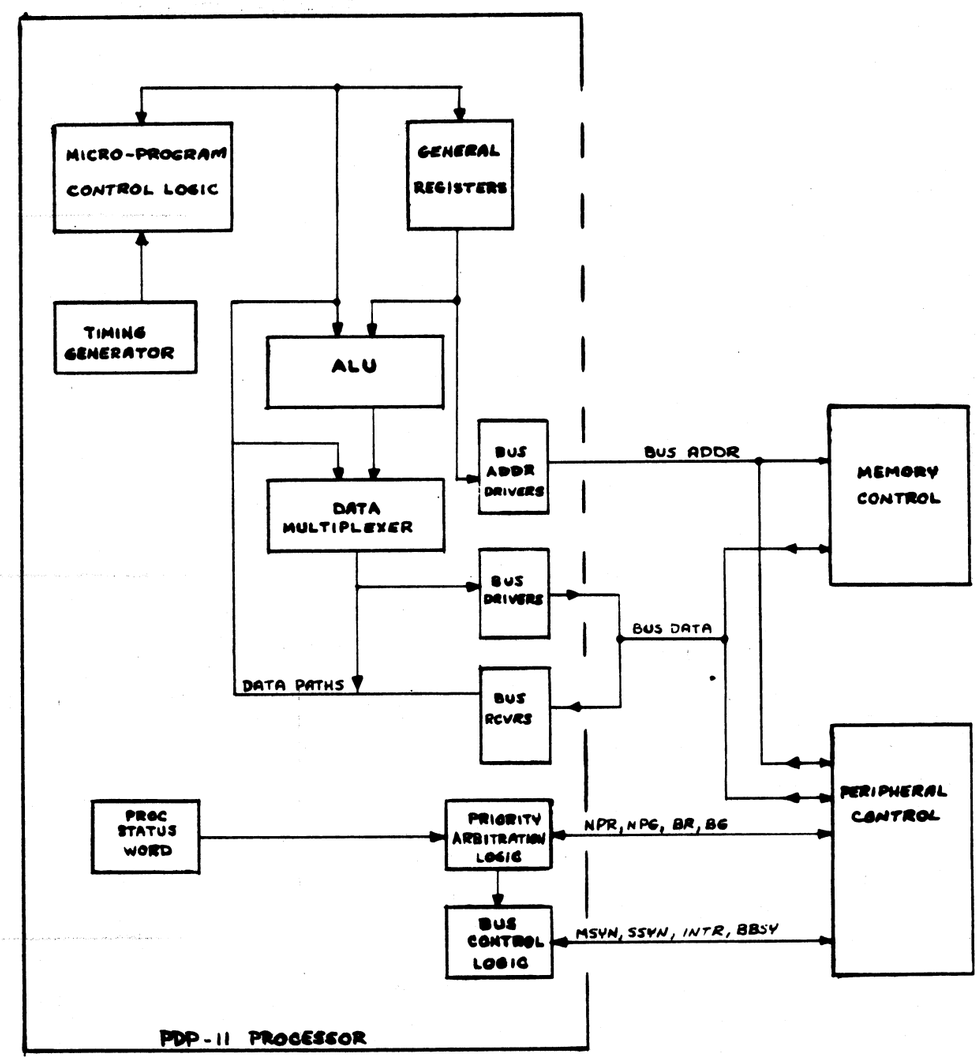

Fig. 2. PDP11 CPU/MEMORY/PERIPHERAL BLOCK DIAGRAM

Walt Rein

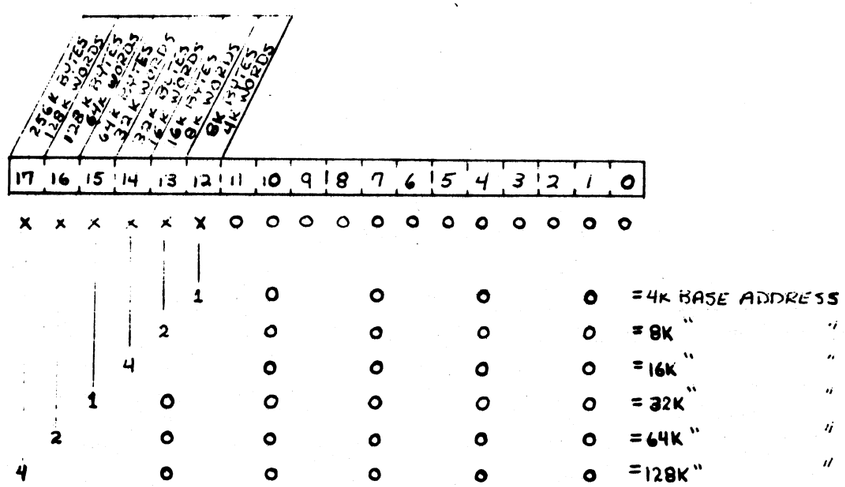

Fig 3. PDP-11 MEMORY ADDRESS INTERPRETATION

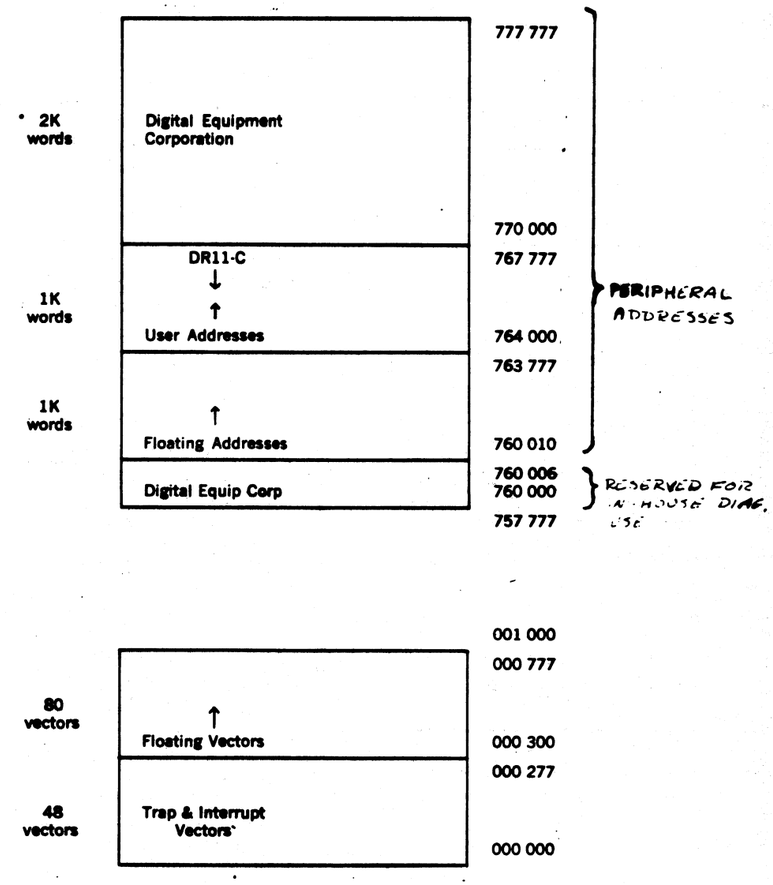

Fig 4 PDP-11 ADDRESS MAP

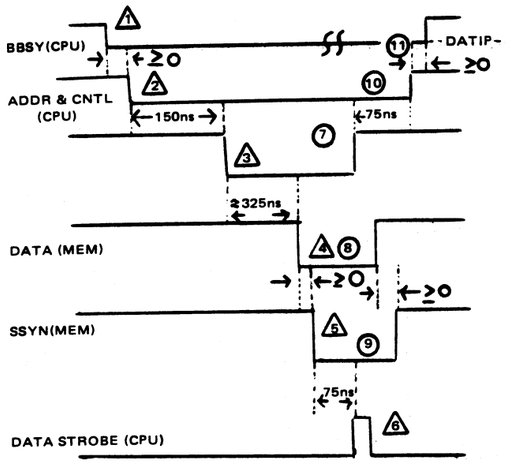

1. CPU asserts BBSY and is now bus master.
11. CPU drops BBSY, unless this is a DATIP.
2. CPU asserts address and control lines.
10. CPU drops addr and cntl lines 75ns after dropping MSYN.
3. CPU asserts MSYN after 150ns DESKEW time.
7. CPU negates MSYN after strobing data into itself.
4. Memory puts data on bus 325ns after decoding addr.
8. Memory removes data after seeing MSYN drop.
5. Memory asserts SSYN some time after data is put on bus.
9. Memory negates SSYN after removing data from bus.
6. CPU strobes data into itself 75ns after receiving SSYN. This signal is not on the ubs, shown for explanation purposes only.

*NOTE: DATIP must be followed by DATO or DATOB cycle.

FIGURE 5 MSYN-SSYN timing for DATI or DATIP transaction: CPU Master, Memory Slave.

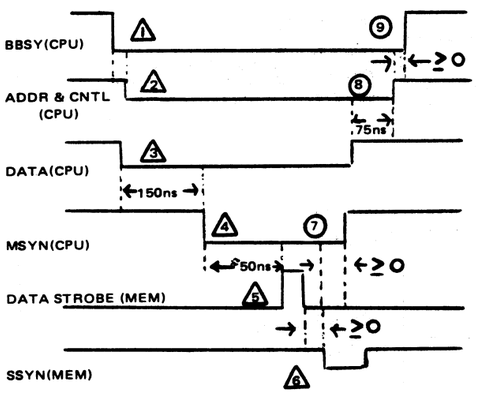

1. CPU asserts BBSY and is now bus master
9. CPU drops BBSY
2. CPU asserts address and control lines.
8. CPU drops addr and cntl lines 75ns after dropping MSYN.
3. CPU puts data on bus.
4. CPU asserts SSYN after 150ns DESKEW time.
7. CPU negates MSYN and data after receiving SSYN.
5. Memory strobes data into itself 50ns after MSYN.
6. Memory asserts SSYN after strobing data.

*NOTE: DATO and DATOB transactions are identical except for conditions of control lines.

FIGURE 6 MSYN-SSYN timing for DATO or DATOB transaction: CPU Master, Memory Slave

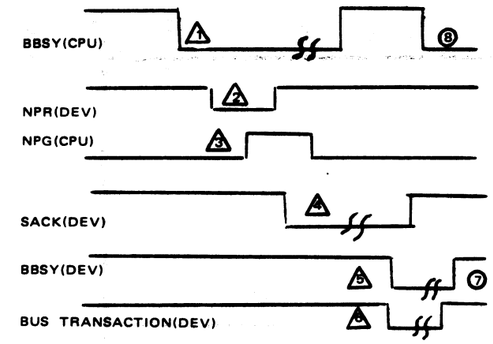

1. CPU holds BBSY until end of current bus cycle.
8. CPU asserts BBSY when device drops it.
2. Device requests bus, drops request when granted, and after asserting sack.
3. Arbitration logic sends NPG if no NPG, BG or sack is asserted, drops grant after receipt of sack.
4. Requesting device acknowledges grant, drops sack after it asserts BBSY.
5. Device asserts BBSY when CPU drops it.
7. Device drops BBSY after transaction is complete.
6. Device initiates DATI or DATO sequence, see Figures 5,6.

FIGURE 7 Priority arbitration timing for non processor request

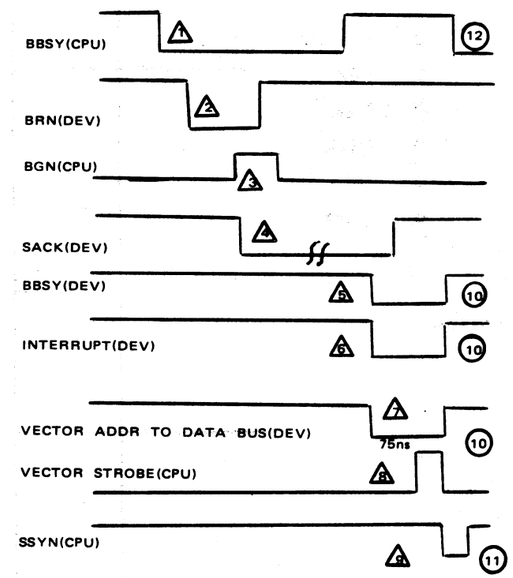

1. CPU holds BBSY until end of current bus cycle.
12. CPU asserts BBSY, proceeds to devices service routine.
2. Device requests bus, drops request when granted, and after asserting sack.
3. Arbitration logic sends BGn if no NRG, BG or sack is asserted. Drops grant after receipt of sack.
4. Requesting device acknowledges grant, drops sack after it asserts BBSY.
5. Device asserts BBSY when CPU drops it.
10. Device drops BBSY, INTR, Vectors after receiving SSYN form CPU.
6. Device asserts INTR when it asserts BBSY.
7. Device puts vector address on data lines when it asserts BBSY.
8. CPU strobes vector address into its internal registers after 75ns DESKEW time.
9. CPU sends SSYN to acknowledge vector transfer.
11. CPU drops SSYN after device drops INTR.

FIGURE 8 Priority arbitration timing for bus request (Interrupt)

KD11-A PROCESSOR

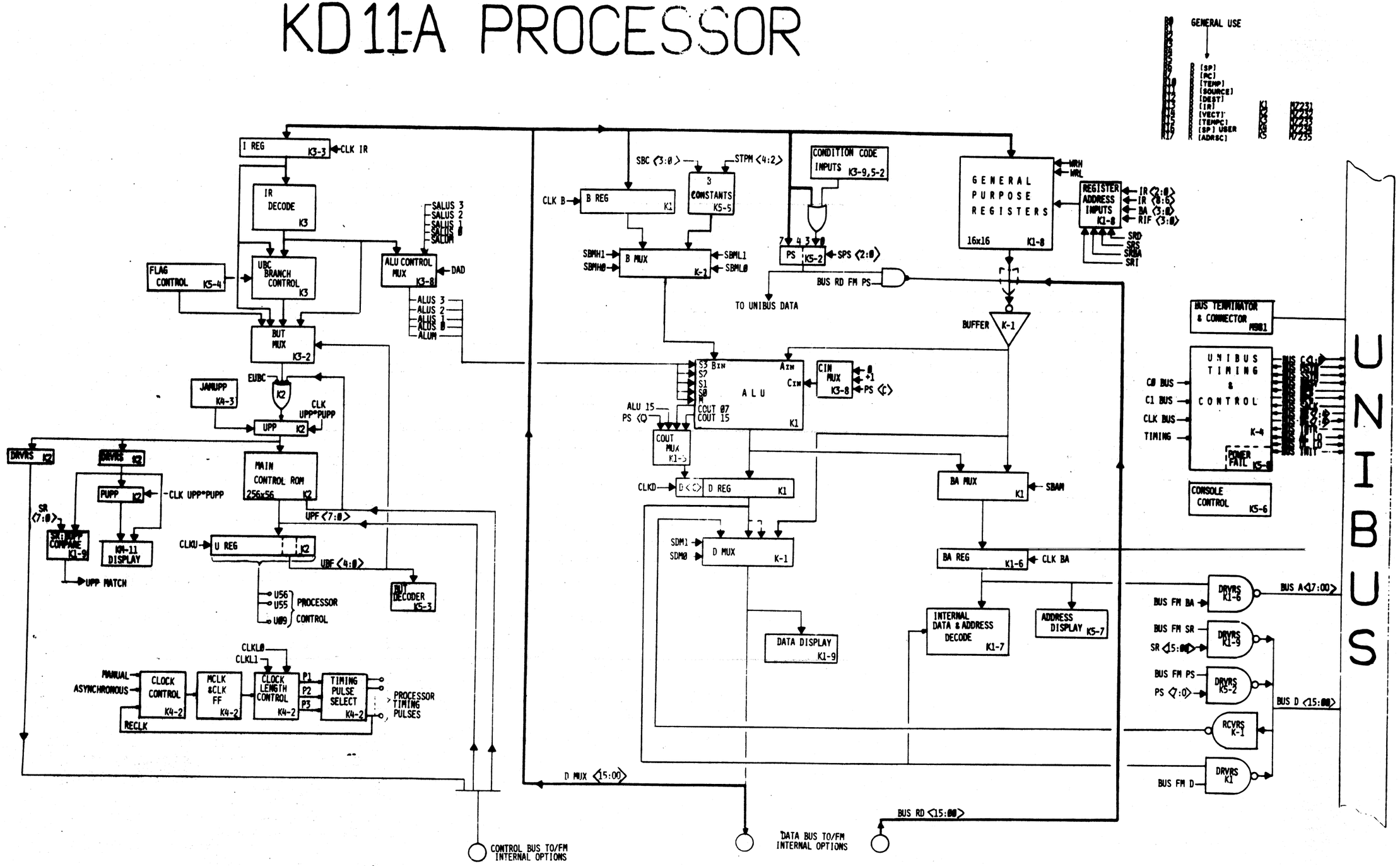

Fig. 10 PDP-11/40 BLOCK DIAGRAM

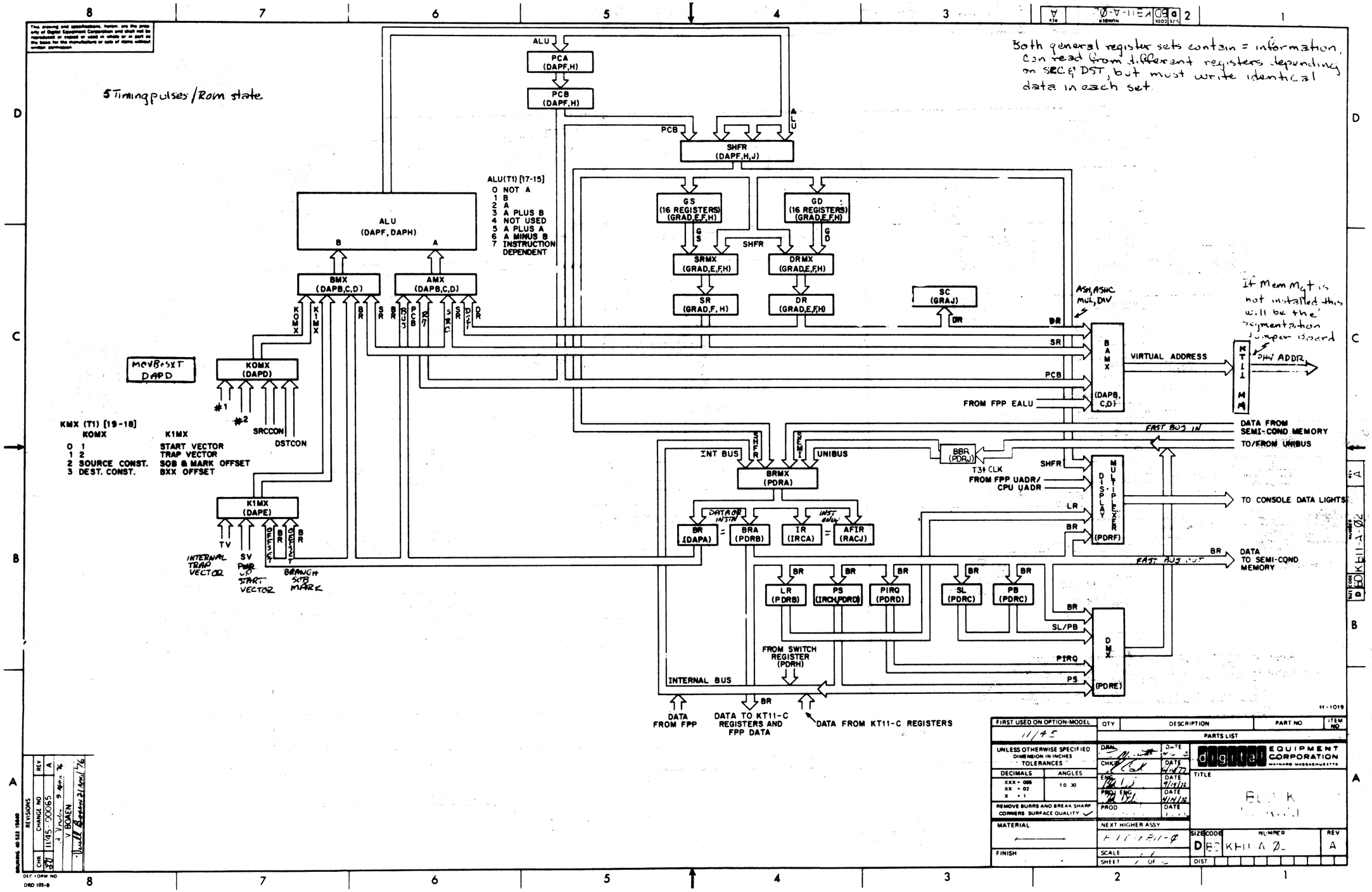

Fig 11. PDP-11/45 BLOCK DIAGRAM

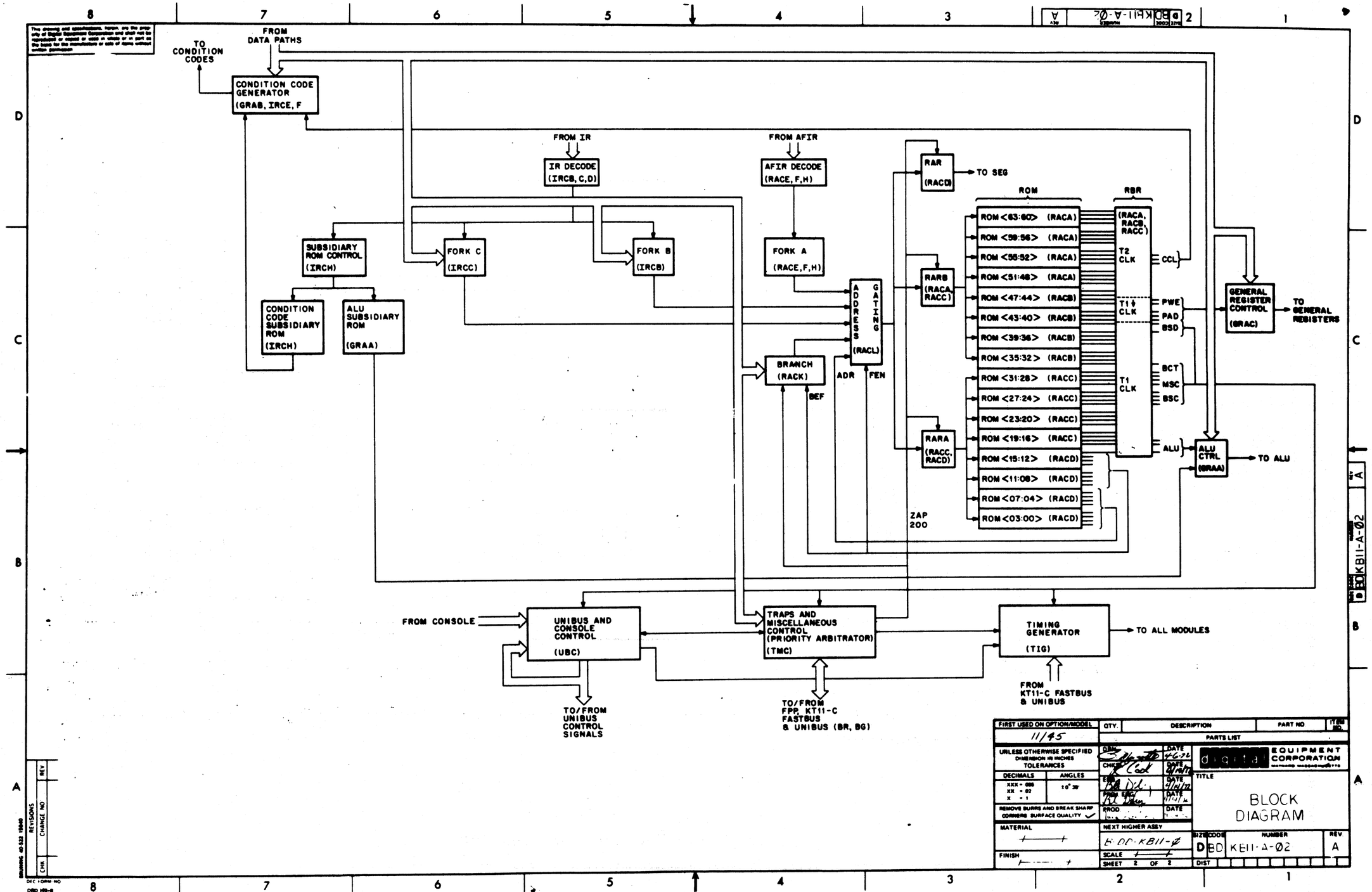
TO CONDITION CODES
FROM DATA PATHS
CONDITION CODE GENERATOR (GRAB, IRCE, F
FROM IR
IR DECODE (IRCB, C, D)
FROM AFIR
AFIR DECODE (RACE, F, H)
SUBSIDIARY ROM CONTROL (IRCH)
FORK C (IRCC)
FORK B (IRCB)
FORK A (RACE, F, H)
CONDITION CODE SUBSIDIARY ROM (IRCH)
ALU SUBSIDIARY ROM (GRAA)
ADDRESS GATING (RACL)
BRANCH (RACK)
ADR
FEN
BEF
RAR (RACD)
TO SEG
RARB (RACA, RACC)
RARA (RACC, RACD)
ZAP 200
ROM
RBR
ROM <63:60> (RACA)
ROM <59:56> (RACA)
ROM <55:52> (RACA)
ROM <51:48> (RACA)
ROM <47:44> (RACB)
ROM <43:40> (RACB)
ROM <39:36> (RACB)
ROM <35:32> (RACB)
ROM <31:28> (RACC)
ROM <27:24> (RACC)
ROM <23:20> (RACC)
ROM <19:16> (RACC)
ROM <15:12> (RACD)
ROM <11:08> (RACD)
ROM <07:04> (RACD)
ROM <03:00> (RACD)
(RACA, RACB, RACC)
T2 CLK
T1Ø CLK
T1 CLK
CCL
PWE
PAD
BSD
BCT
MSC
BSC
ALU
GENERAL REGISTER CONTROL (GRAC)
TO GENERAL REGISTERS
ALU CTRL (GRAA)
TO ALU
FROM CONSOLE
UNIBUS AND CONSOLE CONTROL (UBC)
TO/FROM UNIBUS CONTROL SIGNALS
TRAPS AND MISCELLANEOUS CONTROL (PRIORITY ARBITRATOR) (TMC)
TO/FROM FPP, KT11-C FASTBUS & UNIBUS (BR, BG)
TIMING GENERATOR (TIG)
TO ALL MODULES
FROM KT11-C FASTBUS & UNIBUS
FIRST USED ON OPTION/MODEL
11/45
QTY.
DESCRIPTION
PART NO
ITEM NO.
PARTS LIST
UNLESS OTHERWISE SPECIFIED DIMENSION IN INCHES
TOLERANCES
DECIMALS
ANGLES
REMOVE BURRS AND BREAK SHARP CORNERS SURFACE QUALITY
MATERIAL
FINISH
DRAWN
CHK
ENG
PROD
DATE
NEXT HIGHER ASSY
SCALE
SHEET 2 OF 2
digital EQUIPMENT CORPORATION
TITLE
BLOCK DIAGRAM
SIZE
CODE
NUMBER
REV.
D
BD
KB11-A-Ø2
A
DIST
REVISIONS
CHANGE NO
REV
DRAWING 40-533 15840
DEC FORM NO
DRD H16-8

7

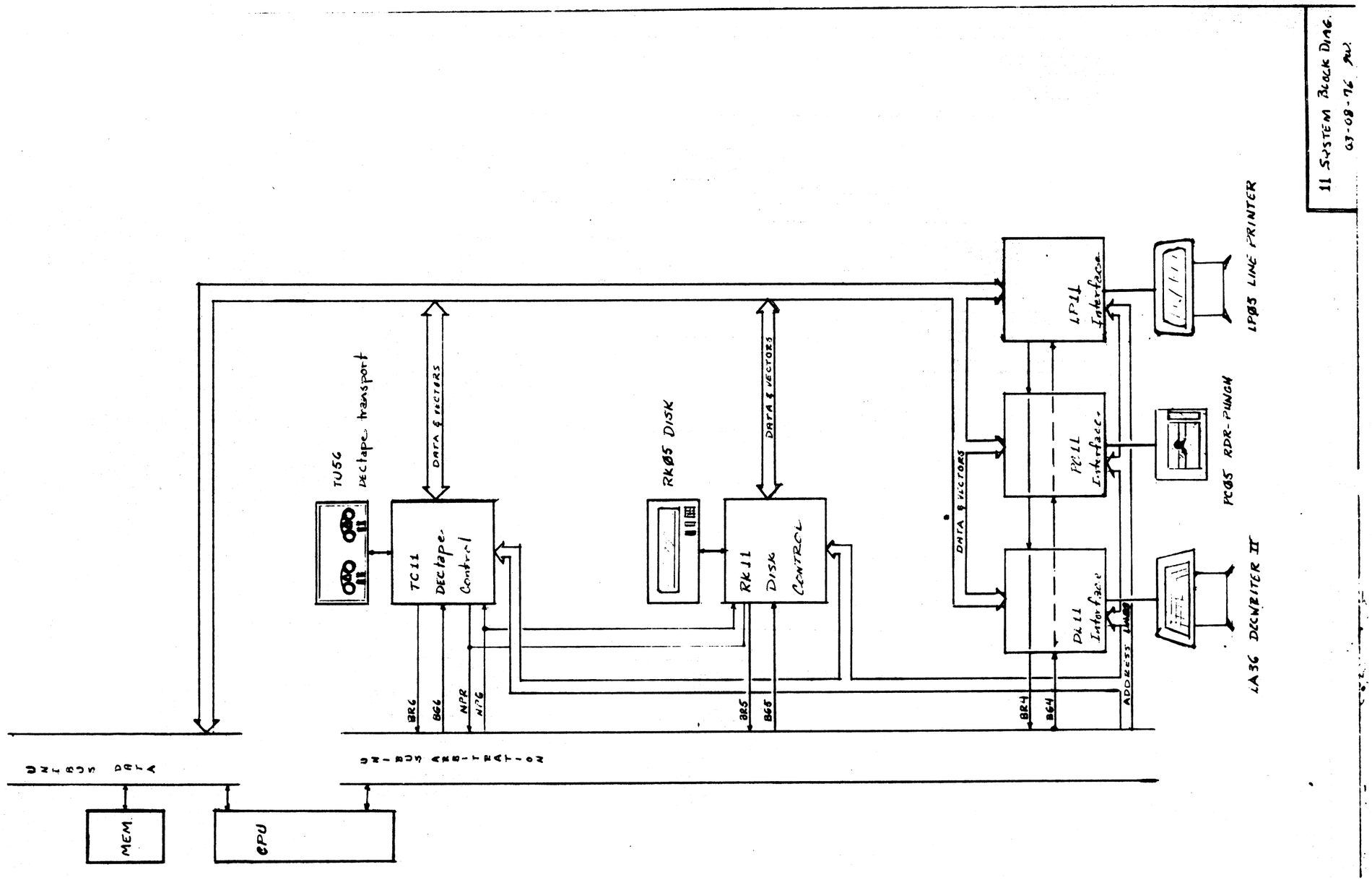

Fig 12. 11 SYSTEM BLOCK DIAGRAM

NOTES:

1.) PIN NOTATION THROUGHOUT IS ORDERED UPON MODULE PLACEMENT IN THE SYSTEM UNIT. MODULE REFERENCE ALONE IS OBTAINED BY CONVERTING THE FIRST LETTER ACCORDING TO THE PIN NOMENCLATURE CHART AT THE LEFT.

2.) JUMPERS TO BE USED AT CONNECTIONS A3-A10, J1-J10, V3-V8, AND N1.

3.) LETTERS ENCLOSED IN PARENTHESIS REFER TO PINS ON THE BERG CONNECTOR. EXAMPLE: (X).

4. DEC 8640S WERE PHASED IN AS DEC 380 REPLACEMENTS ANY 380 FAILURES SHOULD BE REPLACED BY 8640S EXCEPT E28. E28 MUST BE REPLACED WITH A 7380.

5. FOR YC VERSION, C36 VALUE IS 1200PF.

PIN NOMENCLATURE

MODULE	SYSTEM UNIT
A	C
B	D
C	E
D	F

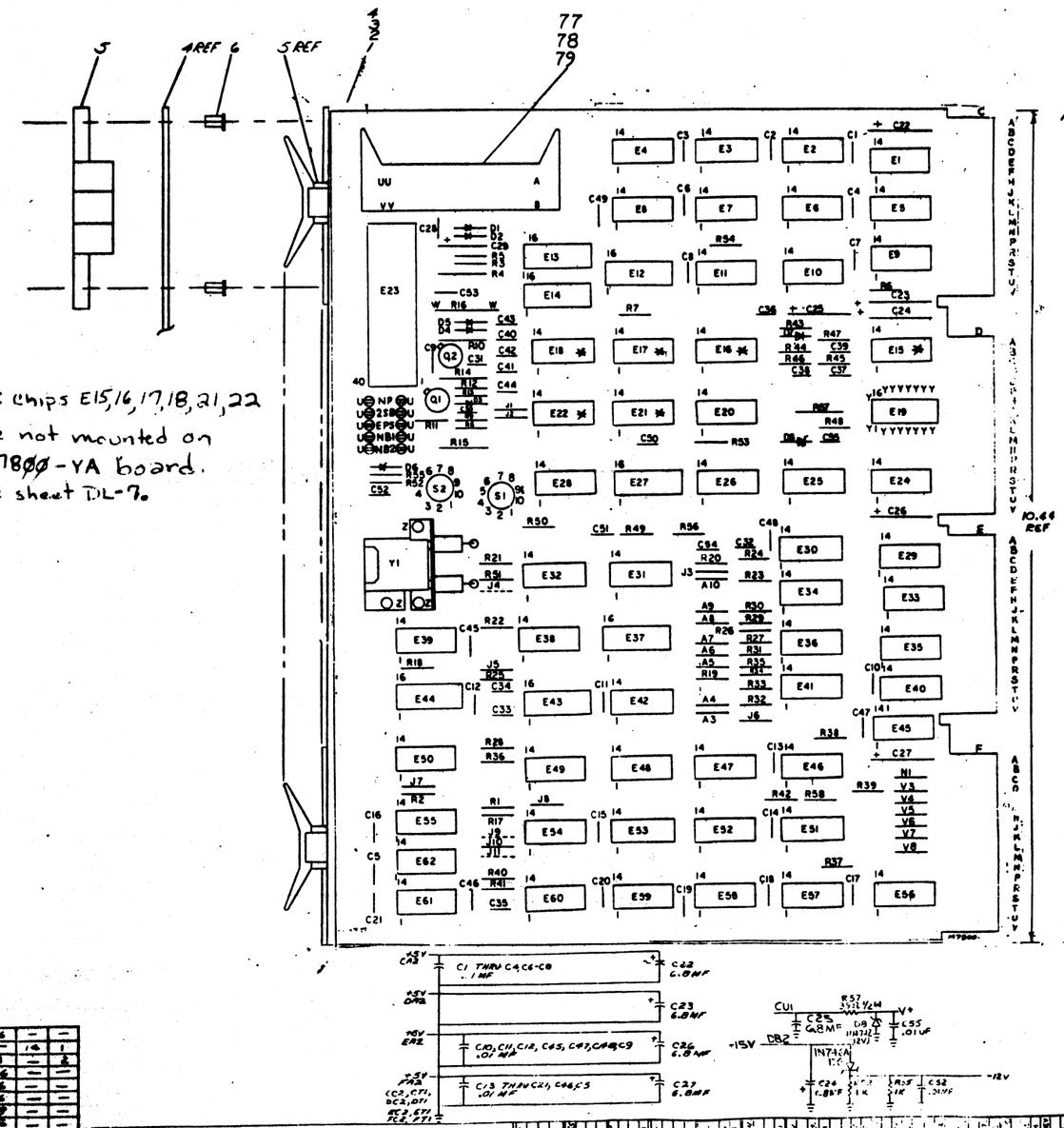

* Note: Chips E15, 16, 17, 18, 21, 22 are not mounted on M7800-YA board. See sheet DL-7.

DEC 74161	8	16	—	—
DEC 1488	7	—	14	—
DEC UART	3	1	—	2
DEC 74132	8	16	—	—
DEC 8271	8	16	—	—
DEC 7442	8	16	—	—
DEC 3P6	1	8	—	—
DEC 7493	10	5	—	—
DEC 7492	10	5	—	—
DEC 74123	8	16	—	—
DEC 8640	1	8	—	—
DEC 7490	10	5	—	—
DEC 74123	8	16	—	—
IC TYPE	GND	+5V	+V	-12V

IC PIN LOCATIONS

QTY	REF DESIGNATION	DESCRIPTION	PART NO.	ITEM NO.
1	1	E28	IC DEC 7380	1918398	80
1	1		LATCH RIGHT	1209941-04	79
1	1		LATCH LEFT	1209941-03	78
1	1		CONNECTOR BERG	1209941-02	77
1	1		INSULATED JUMPER	9009185	76
1	0	C36	CAP 1200 PF 100V 5%	1002424	75
AR	AR		WIRE #22 AWG/10 AWG	9107850-01	74
1	1	R57	RES 33 1/2W 5%	3023336	73
1	1	D8	DIODE 4742 12V 10% 1W ZENER	1015012	72
3	3		INT. WASHER #2	3006431	71
1	1	E27	IC DEC 1488	1910230	70
3	3		NUT HEX #2	3006433	69
3	3		SCR PH PAN HD 2-56 1/4 LG	3007402-01	68
2	2		AUGAT SOCK PG-1	1202812	67
6	6		DIODE 1G64 20V 100MA	1100112	66
7	7		DIODE 1N4148	1104860	65
1	1	Q1	TRANSISTOR 2N3906	1031401-002	64
1	1	C23	CAP 10MF 10V 5% MYLAR	1000815	63
1	1	C5-4	CAP 50MF 50V 5% MYLAR	1030402	62
2	2	C1, C21	CAP .047MF CERAMIC	1000678	61
1	1	R30	RES 10K 1/4W 5% CARBON FILM	3000917	60
2	2	C31, C39	CAP 330PF 100V 5% CERAMIC DISC	1000313	59
1	1	C37, C48	CAP 470PF 100V 5% CERAMIC DISC	1000320	58
1	1	R27	RES 470 Ω 1/4W 5% CARBON FILM	3000922	57
30	30	1-21, 28, 33, 45-49, 51, 55	CAP .01UF 100V 80% CERAMIC DISC	1000402-01	56
1	1	C29	CAP .47UF 35V 10% TANT	1001943	55
5	5	C2-C27	CAP 6.8UF 35V 10% TANT	1000343	54
1	1	C13	CAP 100PF 100V 5% CERAMIC DISC	1000307	53
2	2	R14, R15	RES 1.5K 1/4W 5%	3003194	52
6	6	R13, R26, R40, R42, R52, R55	RES 1K 1/4W 5%	3000165	51
1	1	R51	RES 68 Ω 1/2W 5%	3102402	50
1	1	R28	RES 68 Ω 1/2W 5%	3102402	49
1	1	R7	RES 82K 1/4W 5%	3000917	48
1	1	R25, R45, R46, R47	RES 100 Ω 1/4W 5%	3000169	47
1	1	R11	RES 120 Ω 1/4W 5%	3000177	46
1	1	R54, R58	RES 180 Ω 1/4W 5%	3000189	45
1	1	R53, R55	RES 220 Ω 1/4W 5%	3000197	44
1	1	R38	RES 390 Ω 1/4W 5%	3000309	43
1	1	R12, R13, R43, R51	RES 470 Ω 1/4W 5%	3000325	42
1	1	R4	RES 560 Ω 1/2W 5%	3003398	41
1	1	R3	RES 750 Ω 1/2W	3002940	40
1	1	R16	RES 750 Ω 1W 5%	3023183	39
27	27	R1, R2, R4, R7, R17-R22, R25, R27-R33, R39, R49, R50, R54, R56	RESISTOR 1/4W 5%	3000479	38
2	2	R5, R6	RES 1.5K 1/4W 5%	3000391	37
1	1	IC 1	IC DEC 1488	1910230	36
4	4	E33, E35, E40, E42	IC DEC 7474	1903347	35
3	3	E34, E36, E41	IC DEC 8242	1909778	34
3	3	E38, E39, E39	IC DEC 7400	1910133	33
2	2	E18, E21	IC DEC 7489	1909931	32
2	2	E16, E19	IC DEC 7404	1909933	31
11	11	E22, E31, E32, E37, E41, E50, E51, E52, E53, E54, E55, E56	IC DEC 8681	1909935	30
1	1	E46	IC DEC 1488	1910230	29
1	1	E45	IC DEC 7413	1910232	28
3	3	E44, E47, E52	IC DEC 74123	1909937	27
3	3	E43, E48, E53	IC DEC 7400	1910133	26
1	1	E42	IC DEC 7473	1909939	25
1	1	E50, E59	IC DEC 7402	1909932	24
7	7	E3, E4, E33, E35, E40, E46, E46	IC DEC 8640	1911469	23
1	1	E40	IC DEC 74123	1909937	22
1	1	E60	IC DEC 74154	1909939	21
1	1	E55	IC DEC 7442	1909933	20
3	3	E16, E17, E30, E33	IC DEC 7404	1909934	19
1	1	E24	IC DEC 7493	1909938	18
1	1	E36	IC DEC 7810	1903576	17
1	1	E29	IC DEC 314	1903304	16
1	1	E37	IC DEC 7442	1909942	15
1	1	E48	IC DEC 8271	1909413	14
2	2	E13, E14	IC DEC 74173	1909431	13
1	1		SOCKET HOLDER	9102823	12
1	1		PRINTED CIRCUIT HOLDER	3301374	11
1	1	J19	IC SOCKET	1909935	10
2	2	S1, S2	SPLITTER, STRAIGHT POLT, 10 POS	1210042-1	9
8	8		[illegible]	[illegible]	8
10	10		SPLITTER LUGS	2106333	7
4	4		[illegible]	9006732	6
4	4		HANDLE, 7" 18-24 IN WALL PATH	9018339-106	5
1	1		ETCHED CIRCUIT BOARD	3100928	4
REF	REF		ECO LEVEL HISTORY	[illegible]	3
REF	REF		ASSY WIRING, HOLE LAYOUT	[illegible]	2
REF	REF		KEY TO ULTIMATE HOLE	[illegible]	1

PARTS LIST

ETCH BOARD REV H

G534D	MPS6534		
7416A	1N4334A		
DC-4	19-1606		
NEXT HIGHER ASSY			

SEMICONDUCTOR CONVERSION CHART

EQUIPMENT CORPORATION

TITLE: ASYNCHRONOUS LINE INTERFACE

SIZE A | NUMBER M7800 | REV P

SHT 1 OF 1

9

This drawing and specifications, both are the property of Digital Equipment Corporation and shall not be reproduced or copied or used in whole or in part as the basis for the manufacture or sale of items without written permission.

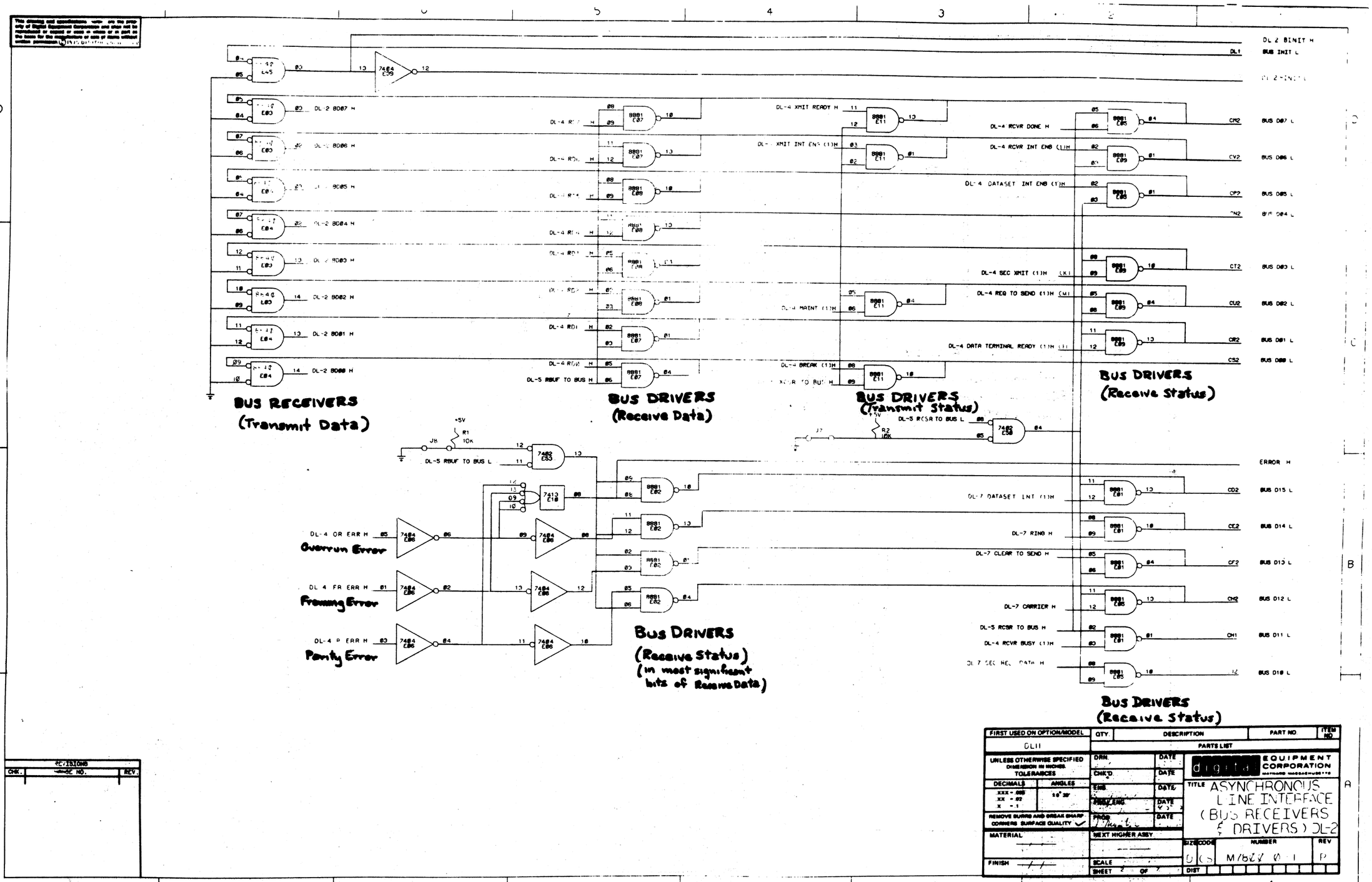

FIRST USED ON OPTION/MODEL	QTY.	DESCRIPTION	PART NO.	ITEM NO.
DL11		PARTS LIST		

UNLESS OTHERWISE SPECIFIED DIMENSION IN INCHES. TOLERANCES
DECIMALS .XXX = .005 .XX = .02 X = .1
ANGLES ±0° 30'
REMOVE BURRS AND BREAK SHARP CORNERS SURFACE QUALITY ✓
MATERIAL —
FINISH —

DRN. DATE
CHK'D DATE
ENG. DATE
PROJ. ENG. DATE
PROD. DATE
NEXT HIGHER ASSY. —
SCALE
SHEET 2 OF 7

digital EQUIPMENT CORPORATION MAYNARD MASSACHUSETTS

TITLE ASYNCHRONOUS LINE INTERFACE (BUS RECEIVERS & DRIVERS) DL-2

SIZE D CODE CS NUMBER M7822 0-1 REV P

DIST

REVISIONS
CHK. ECO NO. REV.

10

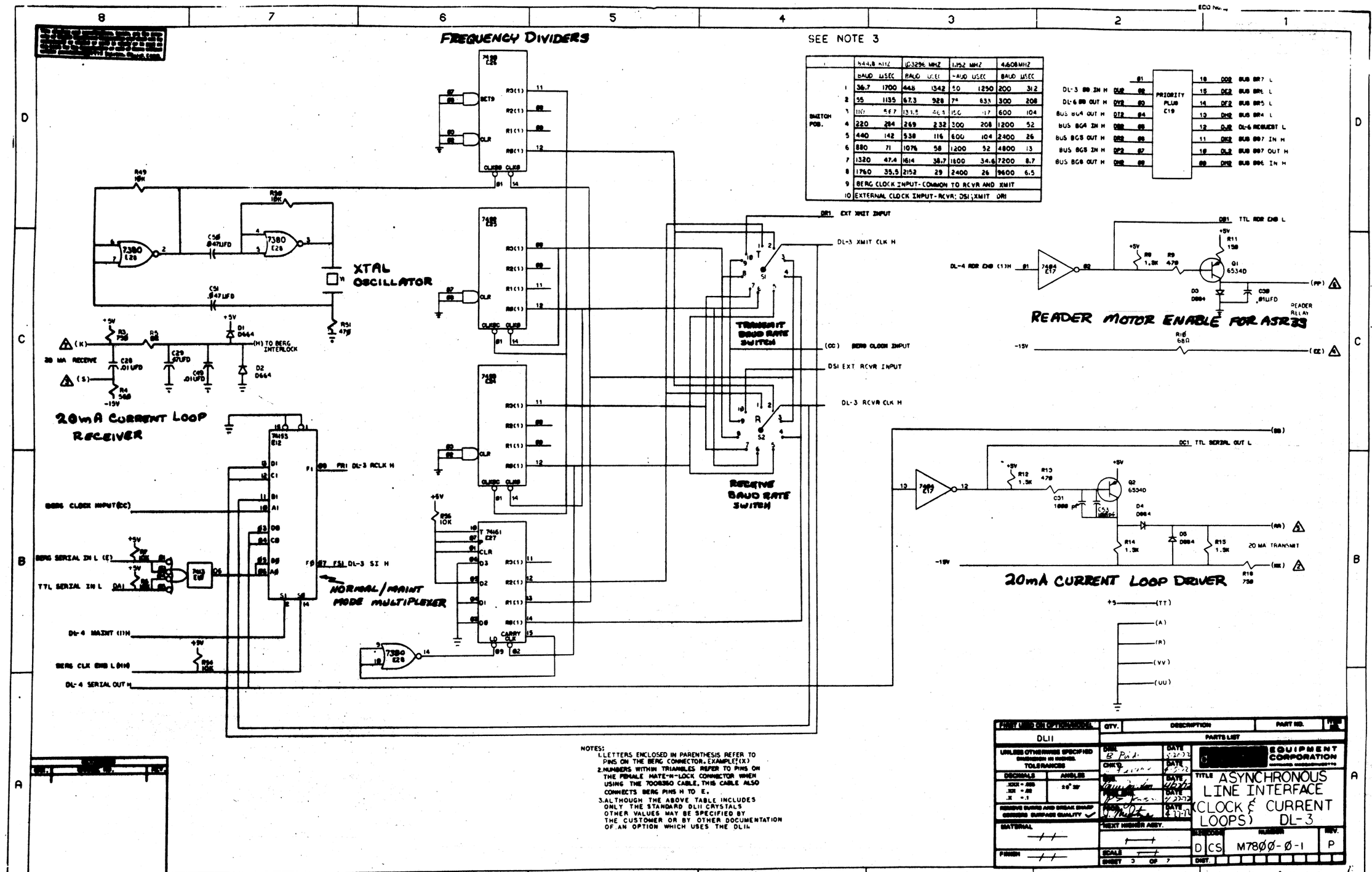

SWITCH POS.	344.8 KHZ BAUD	344.8 KHZ USEC	153296 MHZ BAUD	153296 MHZ USEC	1152 MHZ BAUD	1152 MHZ USEC	4608 MHZ BAUD	4608 MHZ USEC
1	36.7	1700	44.8	1342	50	1250	200	312
2	55	1135	67.3	928	74	833	300	208
3	110	567	134.5	464	150	417	600	104
4	220	284	269	232	300	208	1200	52
5	440	142	538	116	600	104	2400	26
6	880	71	1076	58	1200	52	4800	13
7	1320	47.4	1614	38.7	1800	34.6	7200	8.7
8	1760	35.5	2152	29	2400	26	9600	6.5
9	BERG CLOCK INPUT-COMMON TO RCVR AND XMIT							
10	EXTERNAL CLOCK INPUT-RCVR: DSI; XMIT DRI							

NOTES:
1. LETTERS ENCLOSED IN PARENTHESIS REFER TO PINS ON THE BERG CONNECTOR. EXAMPLE:(X)
2. NUMBERS WITHIN TRIANGLES REFER TO PINS ON THE FEMALE MATE-N-LOCK CONNECTOR WHEN USING THE 700830 CABLE. THIS CABLE ALSO CONNECTS BERG PINS H TO E.
3. ALTHOUGH THE ABOVE TABLE INCLUDES ONLY THE STANDARD DL11 CRYSTALS OTHER VALUES MAY BE SPECIFIED BY THE CUSTOMER OR BY OTHER DOCUMENTATION OF AN OPTION WHICH USES THE DL11

11

This drawing and specifications, herein, are the property of Digital Equipment Corporation and shall not be reproduced or copied or used in whole or in part as the basis for manufacture or sale of items without written permission. © 1975 DIGITAL EQUIP. CORP.

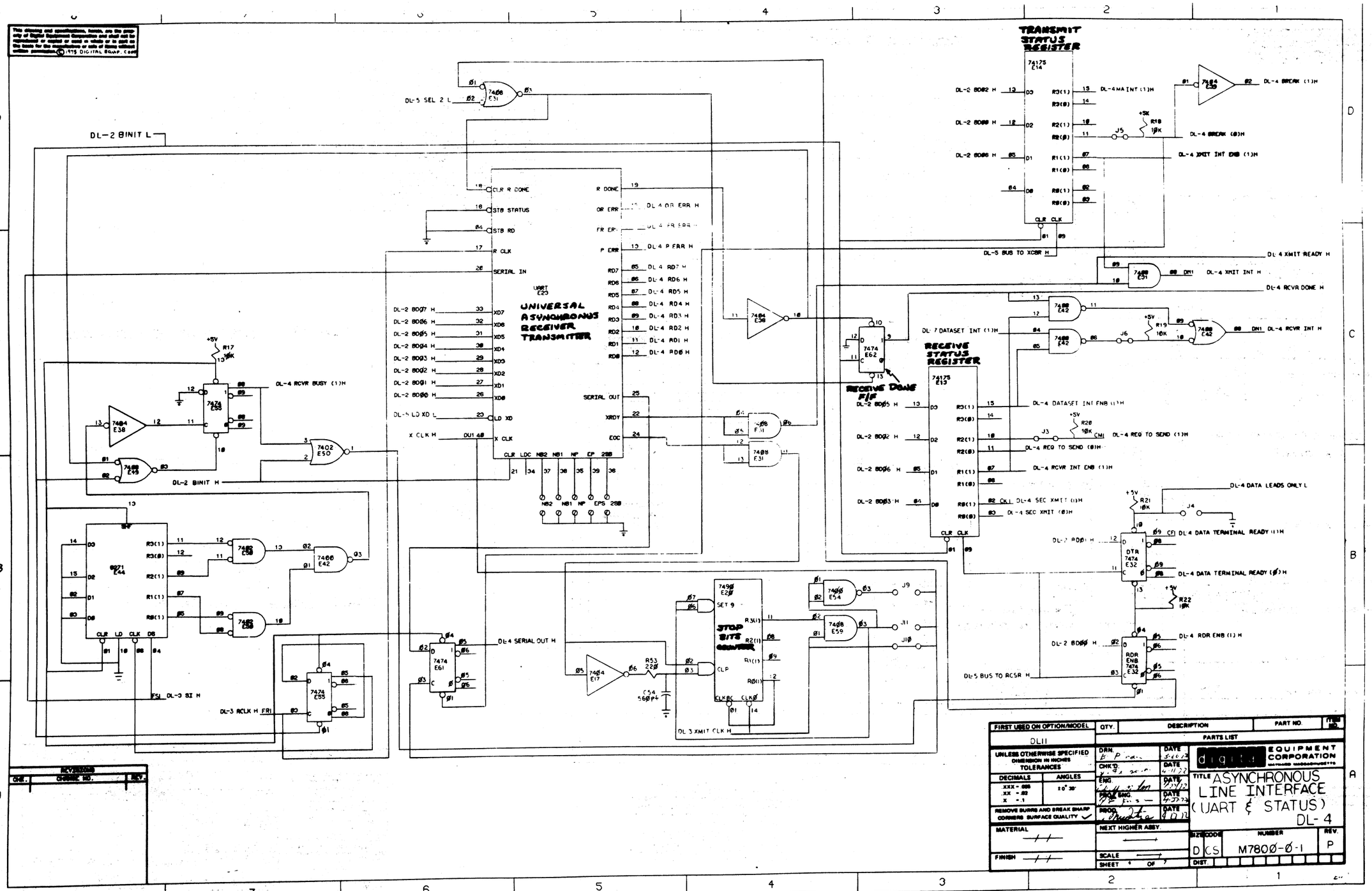
TRANSMIT STATUS REGISTER
74175 E14
RECEIVE STATUS REGISTER
74175 E15
UNIVERSAL ASYNCHRONOUS RECEIVER TRANSMITTER
UART E23
RECEIVE DONE FIF
STOP BITS COUNTER
7499 E20
DTR 7474 E32
RDR ENB 7474 E32
6271 E44
DL-2 BINIT L
DL-2 BINIT H
DL-5 SEL 2 L
DL-4 RCVR BUSY (1)H
DL-4 BREAK (1)H
DL-4 BREAK (0)H
DL-4 XMIT INT ENB (1)H
DL-5 BUS TO XCSR H
DL-4 XMIT READY H
DL-4 XMIT INT H
DL-4 RCVR DONE H
DL-4 RCVR INT H
DL-7 DATASET INT (1)H
DL-4 DATASET INT ENB (1)H
DL-4 REQ TO SEND (1)H
DL-4 REQ TO SEND (0)H
DL-4 RCVR INT ENB (1)H
DL-4 SEC XMIT (1)H
DL-4 SEC XMIT (0)H
DL-4 DATA LEADS ONLY L
DL-4 DATA TERMINAL READY (1)H
DL-4 DATA TERMINAL READY (0)H
DL-4 RDR ENB (1) H
DL-5 BUS TO RCSR H
DL-4 SERIAL OUT H
DL-3 XMIT CLK H
DL-3 RCLK H
DL-3 SI H
DL-4 LD XD L
X CLK H
DL-4 OR ERR H
DL-4 P ERR H
DL-4 RD7 H
DL-4 RD6 H
DL-4 RD5 H
DL-4 RD4 H
DL-4 RD3 H
DL-4 RD2 H
DL-4 RD1 H
DL-4 RD0 H
DL-2 BD07 H
DL-2 BD06 H
DL-2 BD05 H
DL-2 BD04 H
DL-2 BD03 H
DL-2 BD02 H
DL-2 BD01 H
DL-2 BD00 H
DL-2 BD00 H
DL-2 BD00

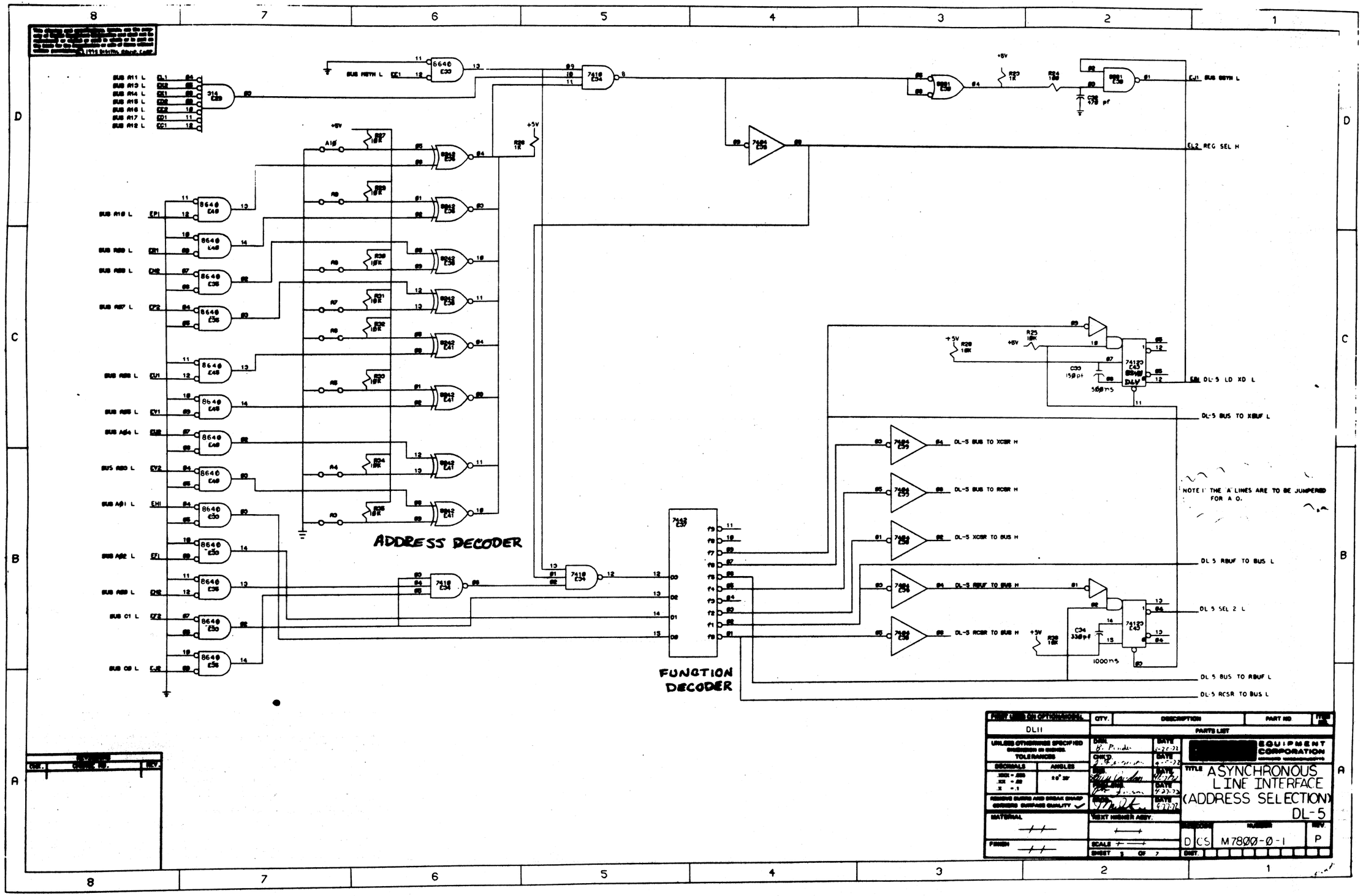
ADDRESS DECODER
FUNCTION DECODER
SUB A11 L
SUB A13 L
SUB A14 L
SUB A15 L
SUB A16 L
SUB A17 L
SUB A12 L
SUB A10 L
SUB A20 L
SUB A30 L
SUB A27 L
SUB A25 L
SUB A35 L
SUB A34 L
SUB A30 L
SUB A01 L
SUB A02 L
SUB A00 L
SUB C1 L
SUB C0 L
SUB MSYN L
EJ1 SUB SSYN L
EL2 REG SEL H
EBL DL-5 LD XD L
DL-5 BUS TO XBUF L
DL-5 BUS TO XCSR H
DL-5 BUS TO RCSR H
DL-5 XCSR TO BUS H
DL-5 RBUF TO BUS H
DL-5 RCSR TO BUS H
DL 5 RBUF TO BUS L
DL 5 SEL 2 L
DL 5 BUS TO RBUF L
DL-5 RCSR TO BUS L
NOTE: THE 'A' LINES ARE TO BE JUMPERED FOR A 0.
DL11
PARTS LIST
QTY.
DESCRIPTION
PART NO
UNLESS OTHERWISE SPECIFIED
TOLERANCES
DECIMALS
ANGLES
MATERIAL
FINISH
NEXT HIGHER ASSY.
SCALE
SHEET 3 OF 7
EQUIPMENT CORPORATION
TITLE
ASYNCHRONOUS LINE INTERFACE (ADDRESS SELECTION) DL-5
D CS M7800-0-1
P

13

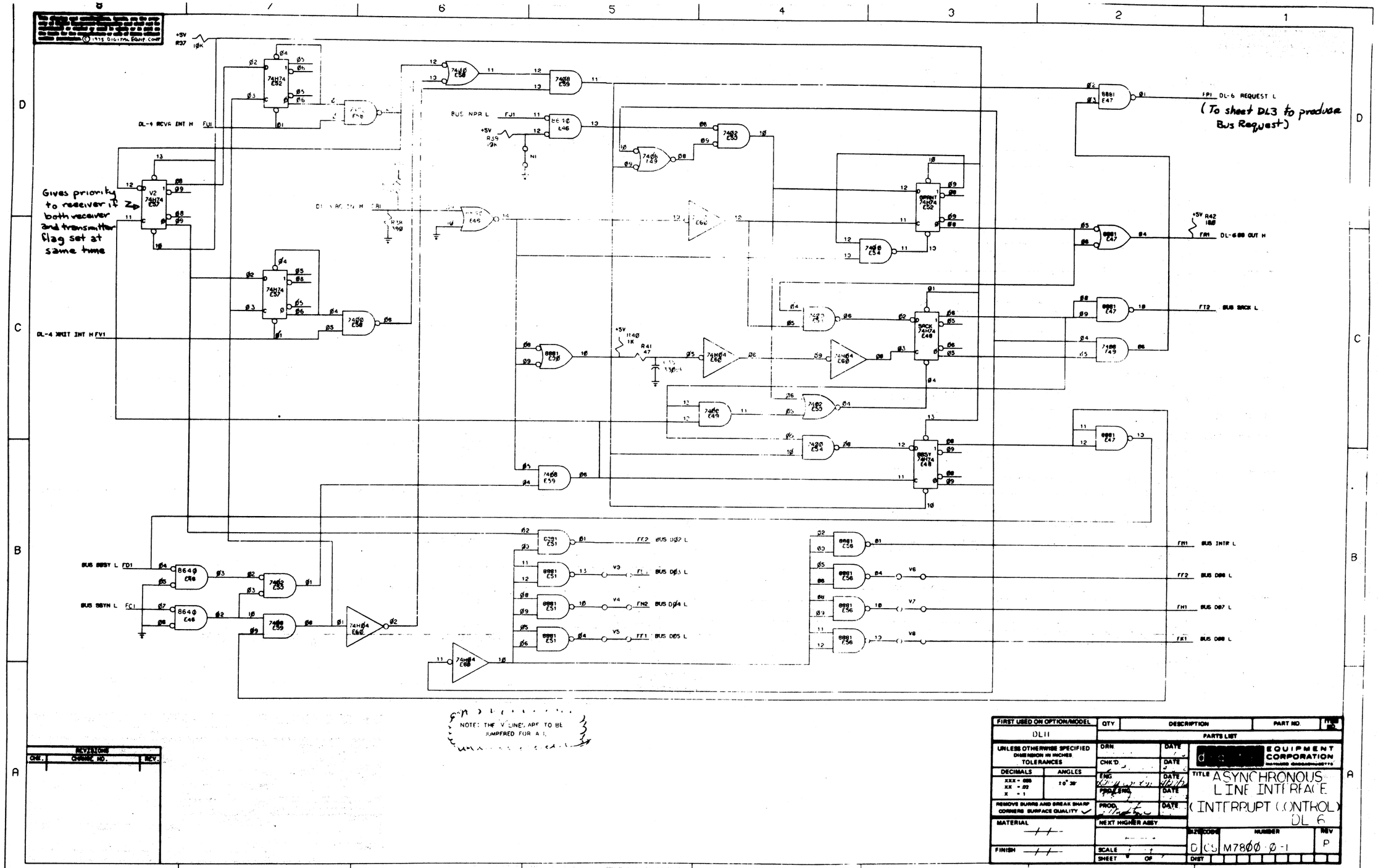

FIRST USED ON OPTION/MODEL	QTY	DESCRIPTION	PART NO.	FIND NO.
DL11		PARTS LIST		

UNLESS OTHERWISE SPECIFIED DIMENSION IN INCHES. TOLERANCES
DECIMALS: XXX = .005, XX = .02, X = 1
ANGLES: ±0° 30'
REMOVE BURRS AND BREAK SHARP CORNERS. SURFACE QUALITY ✓
MATERIAL —/—
FINISH —/—

DRN. DATE
CHK'D DATE
ENG DATE
PROJ. ENG. DATE
PROD. DATE
NEXT HIGHER ASSY
SCALE
SHEET OF

[redacted] EQUIPMENT CORPORATION
MAYNARD, MASSACHUSETTS

TITLE ASYNCHRONOUS LINE INTERFACE (INTERRUPT CONTROL) DL 6

SIZE	CODE	NUMBER	REV
D	CS	M7800-0-1	P

DIST

REVISIONS		
CHG.	CHANGE NO.	REV.

14

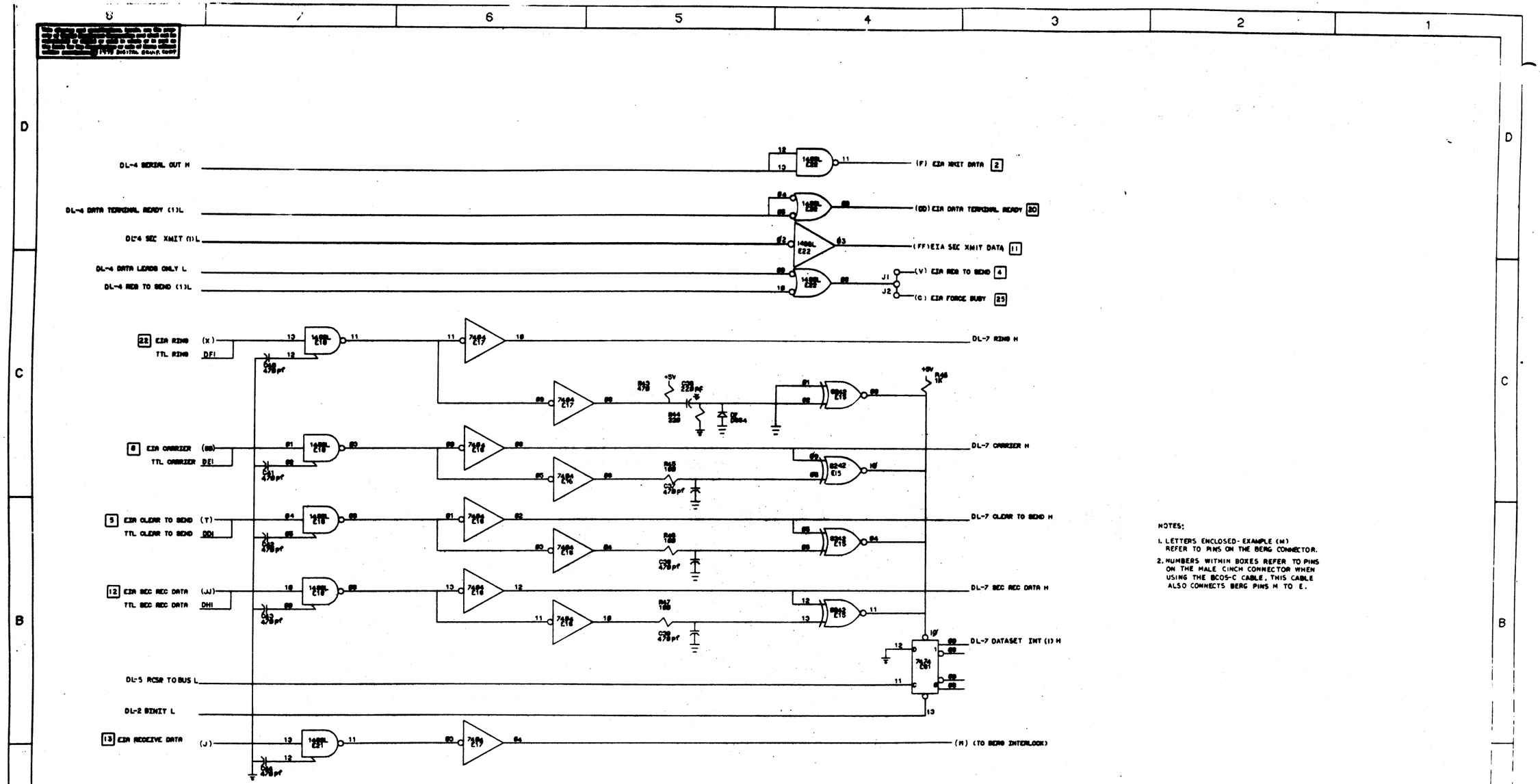

NOTES:

1. LETTERS ENCLOSED- EXAMPLE (M) REFER TO PINS ON THE BERG CONNECTOR.
2. NUMBERS WITHIN BOXES REFER TO PINS ON THE MALE CINCH CONNECTOR WHEN USING THE BC05-C CABLE. THIS CABLE ALSO CONNECTS BERG PINS M TO E.

*FOR YC VERSION, C34 VALUE CHANGES TO 1200PF

* NOTE: This page and these chips do not exist on the M7800-YA board.

REVISIONS		
CHG.	CHANGE NO.	REV.

FIRST USED ON OPTION/MODEL	QTY.	DESCRIPTION	PART NO.	ITEM NO.
DL11	PARTS LIST			

UNLESS OTHERWISE SPECIFIED DIMENSION IN INCHES. TOLERANCES
DECIMALS .XXX = .005 .XX = .02 .X = .1
ANGLES ±0° 30'
REMOVE BURRS AND BREAK SHARP CORNERS SURFACE QUALITY ✓
MATERIAL
FINISH

DSN. B. Pudi DATE 3-27-72
CHK'D. DATE 4-5-72
DATE 4-27-72
PROJ. DATE 4-27-72
PROD. DATE 4-27-72
NEXT HIGHER ASSY.
SCALE
SHEET 7 OF 7

[redacted] EQUIPMENT CORPORATION
MAYNARD MASSACHUSETTS

TITLE ASYNCHRONOUS LINE INTERFACE (EIA DRIVERS & RECEIVERS) DL-7

SIZE D | NUMBER M7800-0-1 | REV P

DIST

15

This drawing and specifications herein are the property of Digital Equipment Corporation and shall not be reproduced or copied or used in whole or in part as the basis for the manufacture or sale of items without written permission

WIRE TABLE

ITEM NO.	DESCRIPTION AWG	COLOR	PAIR NO.	FROM CONNECTION	WITH	TO CONNECTION	WITH
3	22	BLK	1	P1-2	2	P2-KK	5
3		RED		P1-3	2	P2-S	
3,7		SHIELD		SEE NOTE #2	—	P2-A(NOTE #3)	
3		BLK	2	P1-4	2	P2-EE	
3		WHT		P1-5	2	P2-AA	
3,7		SHIELD		SEE NOTE #2	—	P2-UU(NOTE #3)	
3		BLK	3	P1-6	2	P2-PP	
3		GRN		P1-7	2	P2-K	
3,7		SHIELD		SEE NOTE #2	—	P2-VV(NOTE #3)	
6	22	BLK	—	P2-E	5	P2-H	5

NOTES:

1. * [illegible] AND UNITE CAVITIES NOT [illegible] BY LETTERS.
2. DRAIN WIRES TO BE CUT BACK TO OUTER JACKET ON P1 END OF CABLE ONLY. [illegible] TO BE CUT BACK TO OUTER JACKET ON BOTH ENDS OF CABLE.
3. DRAIN WIRES ON [illegible] END OF CABLE TO BE EACH ENCLOSED WITH ITEM #7 (SUBMINIATURE) FROM END OF CABLE JACKET TO POINT [illegible] ENTER P2 [illegible].
4. ITEM [illegible] BE APPROXIMATELY [illegible] LONG.
5. PLACE ITEM #8 (THIS SIDE UP STICKER) ON LETTERED SIDE OF ITEM #4 (BERG HOUSING) AS SHOWN.

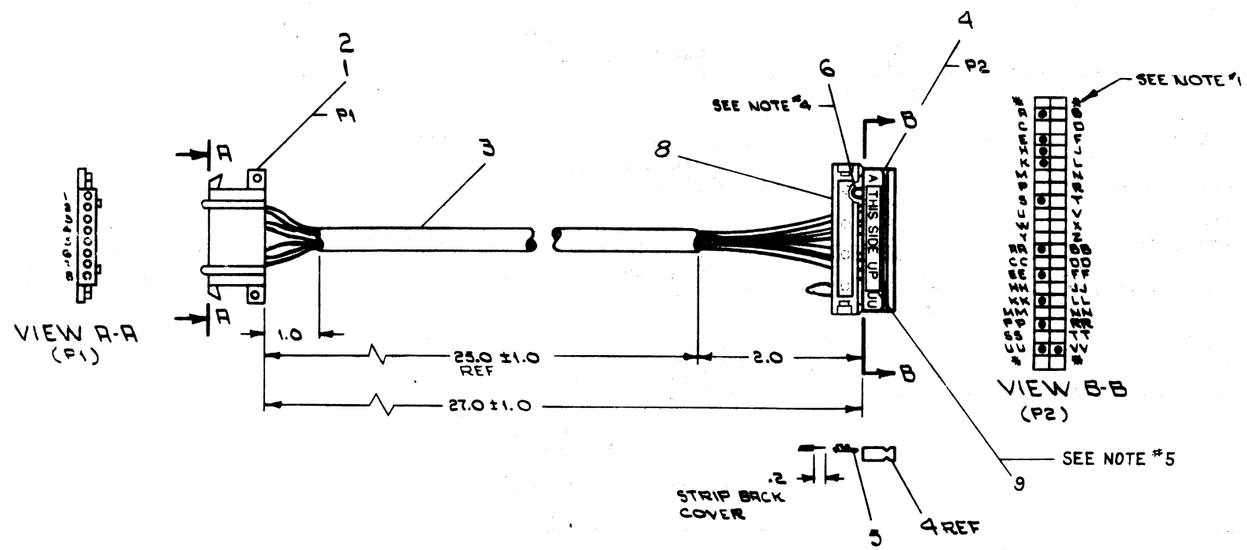

REVISIONS	CHANGE NO	REV
K	8E-00002	A
L	8E-00005	B
M	7008360-00001	C
N	7008360-00002	D
P	7008360-00003	E

DEC FORM NO DRD 100

FIRST USED ON OPTION/MODEL: PDP-8E

DO NOT SCALE DRAWING
UNLESS OTHERWISE SPECIFIED
DIMENSION IN INCHES
TOLERANCES
ANGLES ± 0°30'
FINAL SURFACE QUALITY
REMOVE BURRS AND BREAK SHARP CORNERS

MATERIAL: SEE PARTS LIST

FINISH

QTY	NO	NAME
1	6	CONTACT [illegible]
1	5	CONN. [illegible]
	4	[illegible]
	3	[illegible]
	2	[illegible]
	1	[illegible]

DRN
CHKD
ENG
MFG
PROD
NEXT HIGHER ASSY
SCALE

7008360

16

This drawing and specifications, herein, are the property of Digital Equipment Corporation and shall not be reproduced or copied or used in whole or in part as the basis for the manufacture or sale of items without written permission.

DIGITAL EQUIPMENT CORPORATION
MAYNARD, MASSACHUSETTS

DATE 6-21-72

TITLE DL11 INSTALLATION PROCEDURE

REVISIONS

REV	DESCRIPTION	CHG NO	ORIG	DATE	APPD BY	DATE
C	CHANGE PER ECO	DL11-4	JANSON	3/73	P. Janson	4-6-73
D	CHANGE PER ECO	DL11-5	CONDON	7/73	L. Condon	[illegible]-73
E	CHANGE PER ECO	DL11-7	CONDON	8/74	L. Condon	8/21/74
F	CHANGE PER ECO	DL11-8	CONDON	4-75	L. Condon	4/8/75

ENG	APPD	SIZE	CODE	NUMBER	REV
Paul E. Janson	Paul E. Janson	A	[illegible]	[illegible]	F

DEC FORM NO. DRA 107A

SHEET 1 OF 9

ENGINEERING SPECIFICATION [redacted] CONTINUATION SHEET

TITLE DL11 INSTALLATION PROCEDURE

DL11 INSTALLATION PROCEDURE:

Installation of the M7800 module or its variation as a DL11-A through DL11-E option consists of the following preparations:

1. Jumper insertion/deletion for selection of operation mode (A, B, C, D, or E).
2. Register address assignment.
3. Vector address assignment.
4. Priority assignment.
5. Special NPR jumper insertion/deletion.
6. Selection of data format (data bits, stop bits, parity).
7. Selection of crystal for baud rate.
8. Installation of G8000 in systems where +15v is not available.
9. Filter capacitor selection for high baud rate current-loop.

A. OPERATION MODE:

The following describes the jumpers associated with controlling the mode of operation (A,B,C,D, or E):

J1. Ties EIA driver to REQUEST-TO-SEND lead (pin 4) of dataset cable. IN for DL11-B,D, and E; does not affect DL11-A and C. Drawing DL-7.

J2. Ties EIA driver, normally used for the REQUEST-TO-SEND lead, to FORCE BUSY lead (pin 25) for use with Bell 103E. This is a customer option. If not specified, jumper is OUT for all DL11's. Drawing DL-7.

J3. When inserted, allows REQUEST-TO-SEND lead (pin 4) to be controlled by bit 2 of the receiver status register. OUT for DL11-B and D; IN for DL11-E; does not affect DL11-A and C. Drawing DL-4.

J4. When inserted, forces "DATA LEADS ONLY" mode of EIA operation. Turns DATA TERMINAL READY (pin 20) and REQUEST-TO-SEND (pin 4) on. IN for DL11-B and D; OUT for DL11-E; does not affect DL11-A and C. Drawing DL-4.

J5. When inserted, allows the BREAK bit to function. OUT for DL11-A and B; IN for DL11-C,D, and E. Drawing DL-4.

J6. When inserted, allows DSET INT to cause interrupts. OUT for DL11-A,B,C and D; IN for DL11-E. Drawing DL-4.

J7. When inserted, allows dataset control bits to be read as part of the receiver status register.

SIZE	CODE	NUMBER	REV
A	SP	DL11-0-2	F

DEC FORM NO DEC 16-(381)-1022-N370 DRA 108

SHEET 2 OF 9

J7. (con't)

OUT for DL11-A,B,C and D; IN for DL11-E. Drawing DL-2.

J8. When inserted, allows error bits to be read as part of the receiver data **register**. OUT for DL11-A and B; IN for DL11-C,D and E. Drawing DL-2.

Summary of mode control jumpers:

JUMPER	A	B	C	D	E	DRAWING
J1	*	IN	*	IN	IN	DL-7
J2	OUT	OUT	OUT	OUT	OUT	DL-7
J3	*	OUT	*	OUT	IN	DL-4
J4	*	IN	*	IN	OUT	DL-4
J5	OUT	OUT	IN	IN	IN	DL-4
J6	OUT	OUT	OUT	OUT	IN	DL-4
J7	OUT	OUT	OUT	OUT	IN	DL-2
J8	OUT	OUT	IN	IN	IN	DL-2

*= don't care

B. REGISTER ADDRESS ASSIGNMENTS:

The DL11 can respond to addresses with the following format:

17	16	15	14	13	12	11	10 9 8 7 6 5 4 3	2 1	0
1	1	1	1	1	1	1	JUMPERS		

Selects 1 of 4 Registers

Byte Control

Bits 10 through 3 are controlled by jumpers A1Ø to A3. A jumper inserted indicates a zero.

For the DL11-A and B used as the console device, address 777560 is assigned. For additional units, assign 776XX0, where XX=50 for the first additional unit and XX=67 for the 16th unit.

For the DL11-C,D and E assign address 77XXX0, where XXX=561 for the first line, and XXX=617 for the 31st line. Assign all C's first, then D's, and then E's.

C. VECTOR ADDRESS ASSIGNMENT:

Jumpers V8 through V3 control the interrupt vector. A jumper inserted provides a vector bit of zero. Vectors can be produced in the form XXØ and XX4 where XX ranges from ØØ to 77.

For the DL11-A and B used as a console device the vector address is 060/064. For additional units vectors are floating.

For the DL11-C,D, and E vector addresses are floating. Assign all C's first, then D's then E's.

D. PRIORITY ASSIGNMENT:

Interrupt priority is established by installing a "priority plug" in the socket at IC location 113. For DL11-A B,C,D and E use level 4, for the standard unit. For level 5-7 as specified by the [illegible] the [illegible] of an option which uses the [illegible].

SUMMARY OF REGISTER, VECTOR AND PRIORITY ASSIGNMENTS:

	ADDRESS	VECTOR	PRIORITY
DL11-A,B CONSOLE	777560 777562 777564 [illegible]	[illegible]	[illegible]
DL11-A,B ADDITIONAL UNITS	776XXØ 776XX2 776XX4 776XX6	FLOATING	[illegible]

Where XX= 50 for line #1
and XX= 67 for line #16

	ADDRESS	VECTOR	PRIORITY
DL11-C,D,E	77XXXØ 77XXX2 77XXX4 77XXX6	Floating	4

Where XXX= 561 for line #1
and XXX= 617 for line #31

E. SPECIAL NPR JUMPER:

Jumper N1, shown on drawing DL-6, controls the response of the interrupt circuit to an NPR request. The jumper should normally be IN, except for 11/20 and 11/15 systems without the KH11 option.

F. SELECTION OF DATA FORMAT:

1. Data Bits

Split lug pairs NB2 and NB1 control the number of data bits in the serial character as follows:

NB2	NB1	# OF DATA BITS
OUT	OUT	8
OUT	IN	7
IN	OUT	6
IN	IN	5

2. Parity

Parity is controlled by split lug pairs NP and EPS as follows:

NP	EPS	PARITY
OUT	OUT	OFF
OUT	IN	OFF
IN	OUT	EVEN
IN	IN	ODD

3. Stop Bits

Split lug pair 2SB and jumpers J9, J10 and J11 control the number of stop bits in the serial character as follows:

2SB	J9	J10	J11	# OF STOP BITS
OUT	OUT	IN	OUT	2
IN	OUT	IN	OUT	1
IN	OUT	OUT	IN	1.5 for TI, GI, and SCM UARTS
IN	IN	OUT	OUT	1.5 for WD UARTS

G. CRYSTAL SELECTION:

The clocking scheme of the DL11 consists of a single crystal oscillator feeding a divider network, with two 10-position switches tapping various points to feed into the UART's

G. Con't

transmitter and receiver sections. Thus, for a given crystal frequency, 8 baud rates are independently selectable for transmit and receive. The two addition switch positions select external clocks.

SPEED GROUP		1	2	3	4
		CRYSTAL (HZ)			
POSITION	FACTOR	844.8K	1.03296M	1.152M	4.608M
1*	23040	36.7	44.8	50	200
2	15360	55	67.3	75	300
3	7680	110	134.5	150	600
4	3840	220	269	300	1200
5	1920	440	538	600	2400
6	960	880	1076	1200	4800
7	640	1320	1614	1800	7200
8	480	1760	2152	2400	9600

*Most counter-clock wise position.

To determine a crystal frequency for a non-standard baud rate, pick the position of the closest baud rate in the 1.152MHz column, and then multiply the non-standard baud rate by the factor for that position. For example, if the customer specifies 1050 baud. this is closest to 1200 baud, position 6.

1050 X 960 = 10080000 = 1.008MHz.

The crystal frequency should not fall outside the range of the standard crystals. Although the above table included only the standard DL11 crystals other values may be specified by the customer or by other documentation of an option which uses the DL11.

DEC part number for the standard crystals are as follows:

844.8 KHz	18-10245-1*
1.03296 MHz	18-05501-6
1.152 MHz	18-05501-5
4.608 MHz	18-05501-7

*Use A or C cut crystals only. Do not use crystals marked NE-6D.

When ordering a special crystal, refer to purchase specification 18-05501 for crystal specification.

Insure that transparent vinyl tape (9008269) is applied to the top surfaces of the crystal and mounting brackets to insulate from adjacent modules.

H. G8000 INSTALLATION:

For DL11-B, D, and E a positive voltage is required between 9 and 15 volts to operate the EIA drivers. For PDP-11/20 and PDP-11/15 systems with the H720 power supply, a G8000 module must be installed to provide this voltage. Using a filter network, this module converts the full-wave rectified "+8V" signal to a positive DC voltage.

1. Install G8000 into slot AØ2 of DD11-A.
2. Wire AØ3V2 to AØ2V2.
3. Wire AØ2N2 to CXXU1 where XX is the slot location of the M7800.

Refer to diagram 1.

I. FILTER CAPACITOR SELECTION:

For DL11-A's and DL11-C's, which operate with 20ma current loops, capacitors are used to filter the receive line and slow the switching time of the transmit line. To avoid excessive distortion above 150 baud, the capacitance in each of these two circuits must be reduced. This is accomplished by clipping C29 (.47 mfd) and C31 (1000 pf), both shown on drawing DL-3.

J. DL11-B,D,E in Systems with +15V available using DD11-A
There is a special situation of using a DD11-A to mount a DL11-B, D, Or E in systems with +15V available. These systems have +15V available and it appears at pin AØ3V2 of the DD11-A when using power harness such as 7009177, 7008855, or 7008909. In this situation, no G8000 is necessary, and +15V can be wired directly from AØ3V2 to CXXU1, where XX is the slot number of the DL11. NOTE: this does not apply to DL11-A or C or DD11-B.

K. When using the DL11-B,D,E in an 11/05 processor pin CXXU1 has +15V available on it so no G8000 or no jumpers are required.

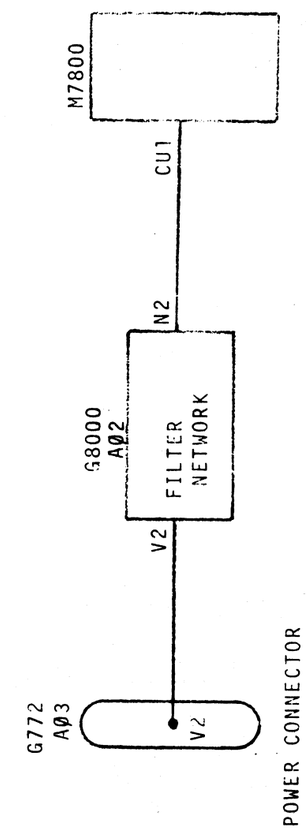

DIAGRAM 1. G8000 INSTALLATION

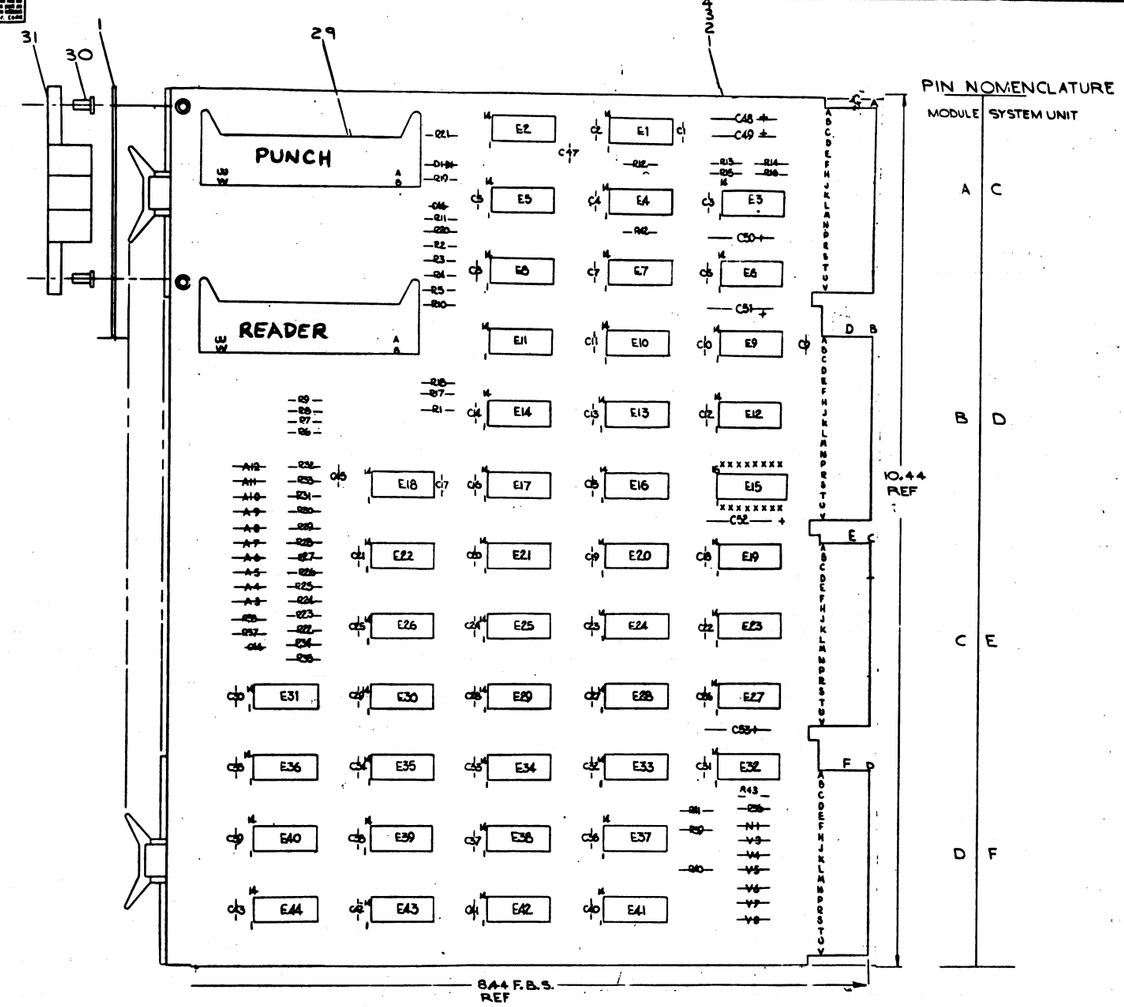

PIN NOMENCLATURE

MODULE	SYSTEM UNIT
A	C
B	D
C	E
D	F

NOTES:

1.) PIN NOTATION THROUGHOUT IS ORDERED UPON MODULE PLACEMENT IN THE SYSTEM UNIT. MODULE REFERENCE ALONE IS OBTAINED BY CONVERTING THE FIRST LETTER ACCORDING TO THE PIN NOMENCLATURE CHART AT THE LEFT.

2.) JUMPERS TO BE USED AT CONNECTIONS A3-A12, N1, AND V3-V8.

3.) DEC 8640'S WERE PHASED IN AS 380 REPLACEMENTS. ANY 380 FAILURES SHOULD BE REPLACED BY 8640.

QTY	REF DESIGNATION	DESCRIPTION	PART NO	ITEM NO
17	W1 — W17	JUMPER WIRE	9107560-01	36
25	R1,R11,R12,R14,R16,R18-R26, R32-R34,R37,R39,R40,R42	RES 1K 1/4W 5%	1300365	33
1		I.C. SOCKET	[illegible]	[illegible]
4		[illegible]	[illegible]	[illegible]
4		[illegible]	[illegible]	[illegible]
2		DEC 40 PIN CONNECTOR	5001294	[illegible]
2	E38, E42	I.C. DEC 74H04	[illegible]	[illegible]
2	E39, E41	I.C. DEC 74H08	[illegible]	[illegible]
3	E30, E33	I.C. DEC 74H10	[illegible]	[illegible]
1	E29	I.C. DEC 74H00	[illegible]	[illegible]
7	E19, E28, E31	I.C. DEC 8640	[illegible]	[illegible]
2	E21, E32	I.C. DEC 8095	[illegible]	[illegible]
4	[illegible]	I.C. DEC 7400	[illegible]	[illegible]
2	E7, E20	I.C. DEC 7414	[illegible]	[illegible]
8	[illegible]	I.C. DEC 8881	[illegible]	[illegible]
18	[illegible]	I.C. DEC 8640	[illegible]	[illegible]
1	E40	I.C. DEC 74H04	1300001N	[illegible]
1	[illegible]	[illegible]	1300200Z	[illegible]
1	[illegible]	[illegible]	[illegible]	[illegible]
1	[illegible]	[illegible]	[illegible]	[illegible]
1	[illegible]	[illegible]	[illegible]	[illegible]
3	[illegible]	[illegible]	[illegible]	[illegible]
3	[illegible]	[illegible]	[illegible]	[illegible]
2	R40, R43	[illegible]	1300122	[illegible]
1	[illegible]	[illegible]	[illegible]	[illegible]
6	C48-C53	CAPACITOR 6.8 UFD 20V [illegible]	[illegible]	[illegible]
2	[illegible]	CAPACITOR 680 PF 100V [illegible]	[illegible]	[illegible]
1	C50	CAPACITOR 470 PF 100V [illegible]	[illegible]	[illegible]
1	C49	CAPACITOR 10 PF 100V [illegible]	[illegible]	[illegible]
43	C1-C42	CAPACITOR .01 UFD 20V [illegible]	[illegible]	[illegible]
REV		[illegible]	[illegible]	[illegible]
REV		[illegible]	[illegible]	[illegible]
REV		[illegible]	[illegible]	[illegible]
		[illegible]	[illegible]	[illegible]

PARTS LIST

DEC E640	1	2
C TYPE	GND	+5V

GND AND 5V ARE USUALLY PIN 7 AND 14 RESPECTIVELY. EXCEPTIONS ARE STATED ABOVE.

IC PIN LOCATIONS

WIRE NO	AWG	FROM PT	TO PT

JUMPER LIST

PCB BOARD REV	E		
NEXT HIGHER ASSY			

DIGITAL EQUIPMENT CORPORATION

TITLE: PCII INTERFACE PC-1

NUMBER: 7810-3-1 REV: F

SIZE: E

21

This drawing and specifications, herein, are the property of Digital Equipment Corporation and shall not be reproduced or copied or used in whole or in part as the basis for the manufacture or sale of items without written permission. © 1970 DIGITAL EQUIP CORP.

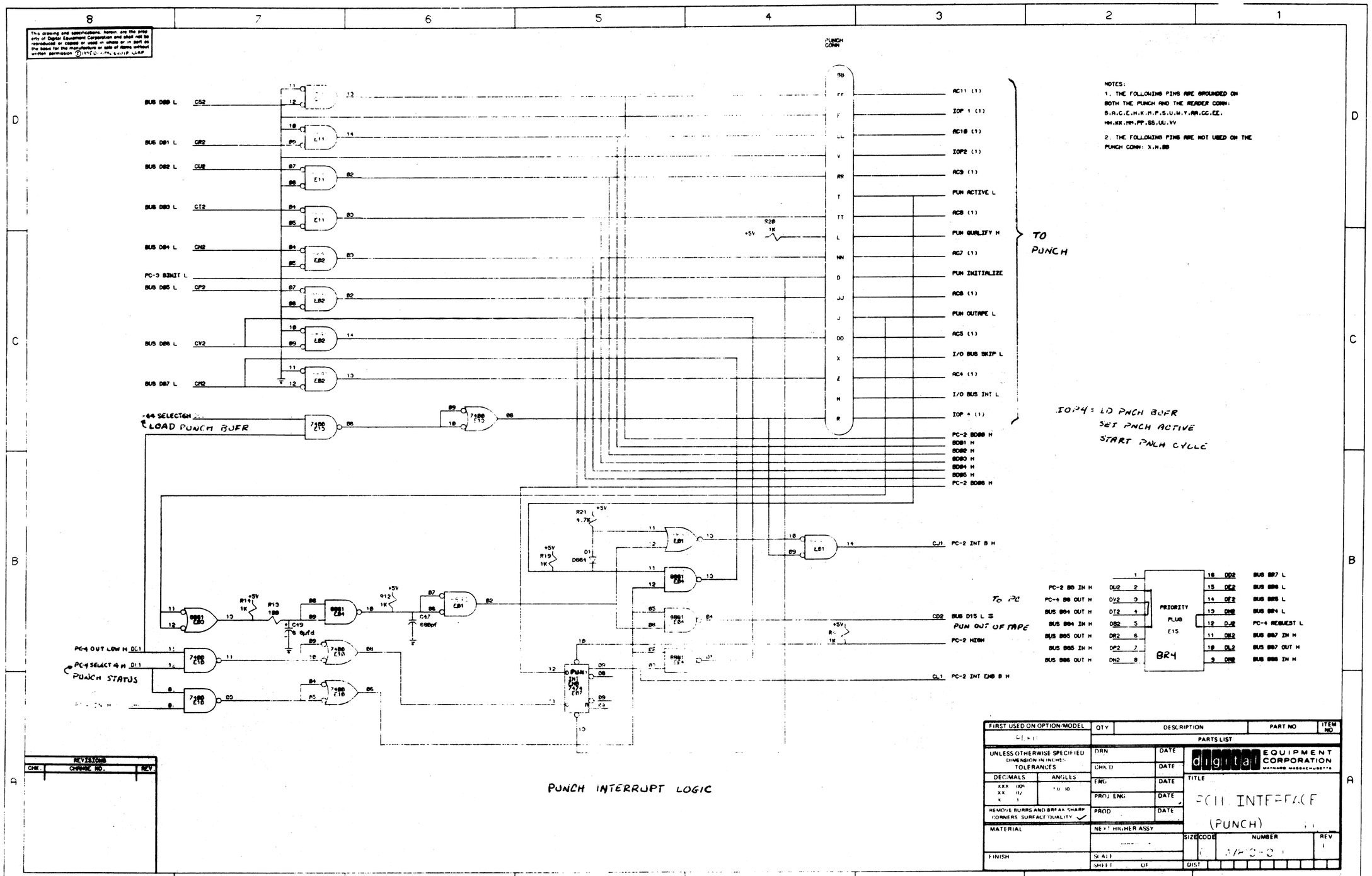

REVISIONS		
CHK.	CHANGE NO.	REV.

FIRST USED ON OPTION/MODEL	QTY	DESCRIPTION	PART NO	ITEM NO
		PARTS LIST		

UNLESS OTHERWISE SPECIFIED DIMENSION IN INCHES TOLERANCES
DECIMALS: .XXX ±.005, .XX ±.02, .X ±.1
ANGLES: ±0°30'
REMOVE BURRS AND BREAK SHARP CORNERS SURFACE QUALITY ✓
MATERIAL
FINISH

DRN DATE
CHKD DATE
ENG DATE
PROJ ENG DATE
PROD DATE
NEXT HIGHER ASSY
SCALE
SHEET OF

digital EQUIPMENT CORPORATION MAYNARD MASSACHUSETTS

TITLE PCII INTERFACE (PUNCH)

SIZE C CODE NUMBER 1/H10-0 REV 1
DIST

22

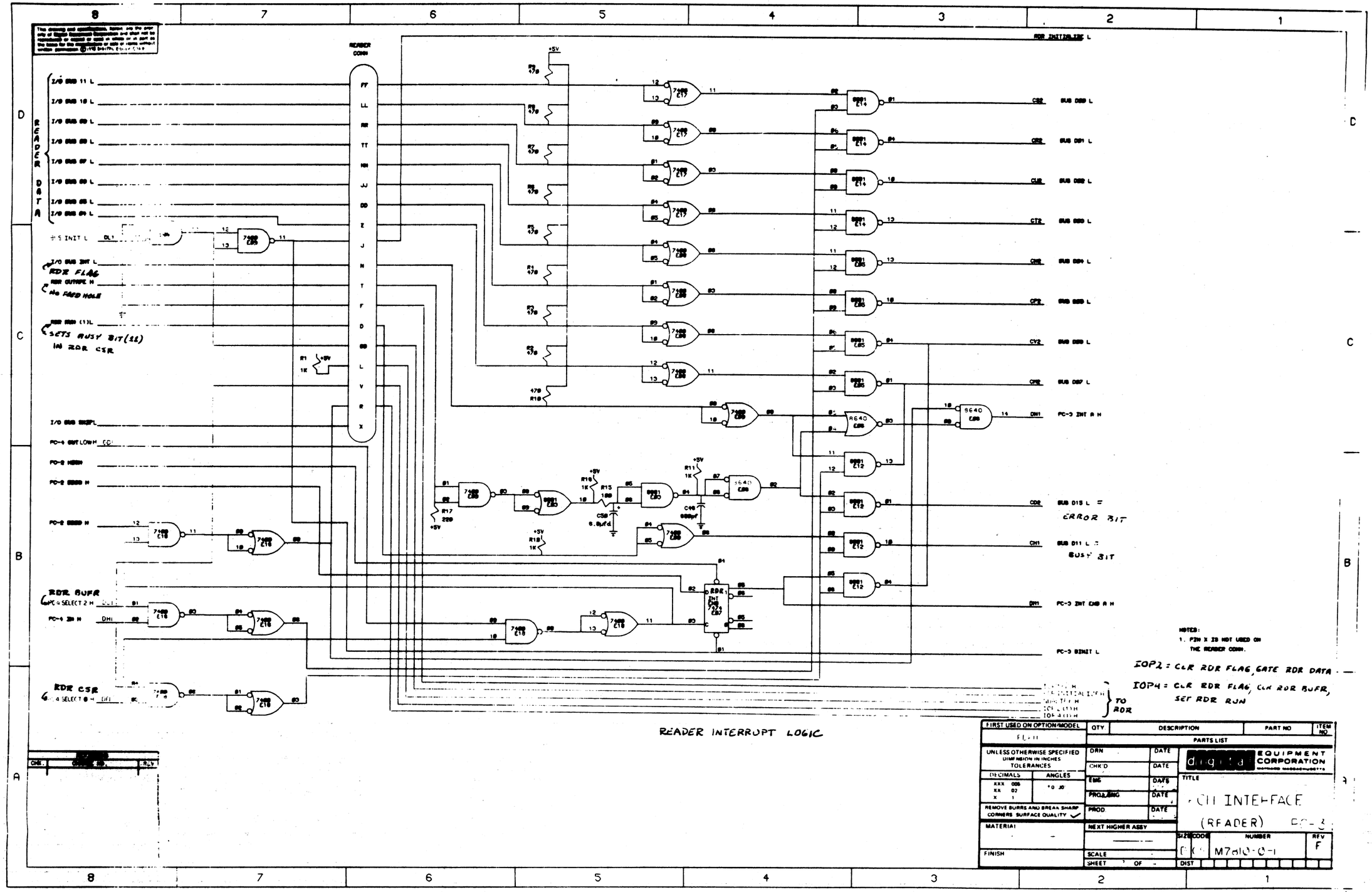
READER DATA
READER CONN
RDR FLAG
NO FEED HOLE
SETS BUSY BIT(11)
IN RDR CSR
RDR BUFR
RDR CSR
ERROR BIT
BUSY BIT
NOTES:
1. PIN X IS NOT USED ON THE READER CONN.
IOP2 = CLR RDR FLAG, GATE RDR DATA
IOP4 = CLR RDR FLAG, CLR RDR BUFR, SET RDR RUN
TO RDR
READER INTERRUPT LOGIC
FIRST USED ON OPTION/MODEL
PARTS LIST
QTY
DESCRIPTION
PART NO
ITEM NO
UNLESS OTHERWISE SPECIFIED DIMENSION IN INCHES TOLERANCES
DECIMALS
ANGLES
REMOVE BURRS AND BREAK SHARP CORNERS SURFACE QUALITY
MATERIAL
FINISH
NEXT HIGHER ASSY
SCALE
SHEET OF
DRN
CHK'D
ENG
PROJ ENG
PROD
DATE
digital EQUIPMENT CORPORATION
TITLE
PDP-11 INTERFACE (READER)
SIZE CODE
NUMBER
M7810-0-1
REV F
DIST

23

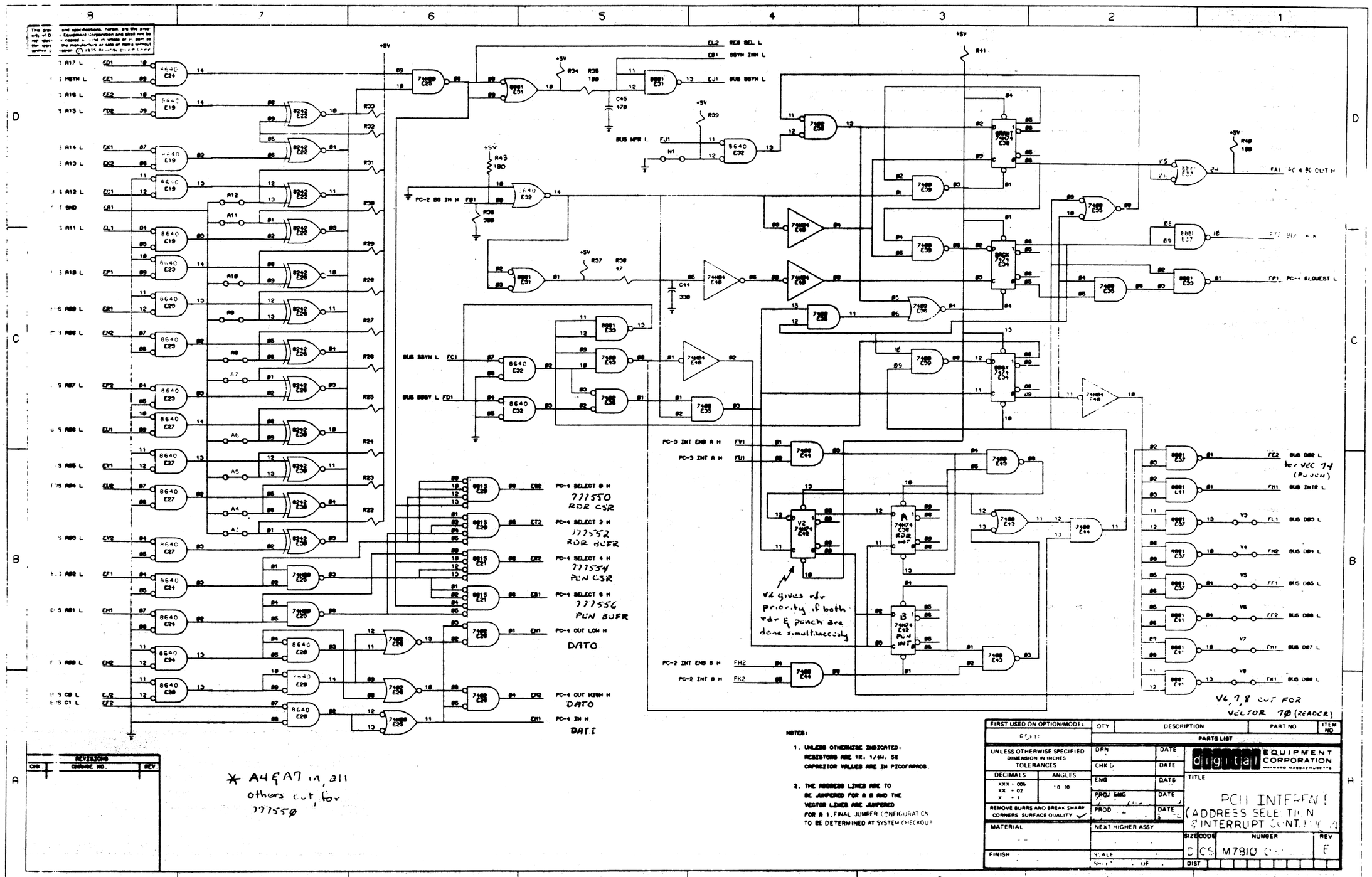

NOTES:

1. UNLESS OTHERWISE INDICATED:
   RESISTORS ARE 1K, 1/4W, 5%
   CAPACITOR VALUES ARE IN PICOFARADS.

2. THE ADDRESS LINES ARE TO BE JUMPERED FOR A 0 AND THE VECTOR LINES ARE JUMPERED FOR A 1. FINAL JUMPER CONFIGURATION TO BE DETERMINED AT SYSTEM CHECKOUT

FIRST USED ON OPTION/MODEL	QTY	DESCRIPTION	PART NO	ITEM NO
		PARTS LIST		

UNLESS OTHERWISE SPECIFIED DIMENSION IN INCHES TOLERANCES
DECIMALS: XXX ± .005, XX ± .02, X ± .1
ANGLES: ± 0° 30'
REMOVE BURRS AND BREAK SHARP CORNERS SURFACE QUALITY ✓
MATERIAL
FINISH

DRN DATE
CHK'D DATE
ENG DATE
PROJ ENG DATE
PROD DATE
NEXT HIGHER ASSY
SCALE
SHEET OF

digital EQUIPMENT CORPORATION MAYNARD MASSACHUSETTS

TITLE PCII INTERFACE (ADDRESS SELECTION & INTERRUPT CONT. [illegible])

SIZE	CODE	NUMBER	REV
C	CS	M7810 [illegible]	F

DIST

REVISIONS		
CHG	CHANGE NO.	REV.

(24)

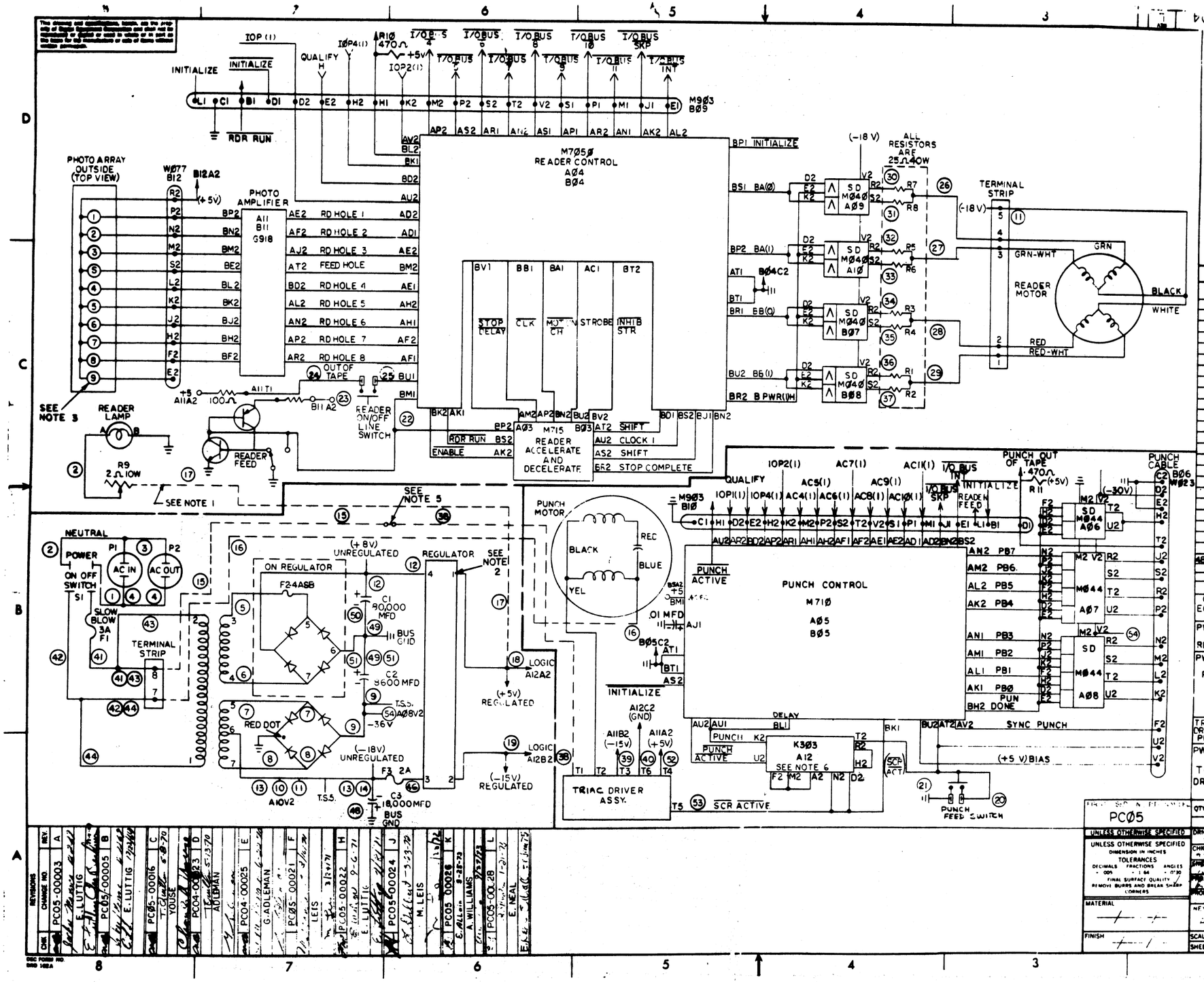

NOTES:

1. DOTTED LINES INDICATE POSSIBLE CONNECTIONS BETWEEN [illegible] TRIAC DRIVER. SEE LEGEND.
2. THE OVERLINED NUMBERS THEY REFER TO CONNECTIONS ON REGULATOR BOARD.
3. THIS PHOTO ARRAY FOR USE TO DETECT OUT OF TAPE.
4. CIRCLED NUMBERS 1 THRU 53 ARE WIRE NUMBERS. SEE TABLE.
5. WIRE #15 AND #38 ARE BUSSED TOGETHER ON SWITCH PANEL ON C, CA, P & PA MODELS ONLY. ON R MODEL THESE WIRES WILL BE CONNECTED AS USUAL TO THEIR APPROPRIATE TABS.
6. WHEN M/1Ø CKT REV H & HIGHER IS USED, DELETE K303 MODULE.

WIRE TABLE

WIRE NO.	COLOR	WIRE NO.	COLOR
1	RED	24	WHITE-YELLOW
2	WHITE	25	BROWN
3	WHITE	26	WHITE-BROWN
4	RED	27	WHITE-ORANGE
5	ORANGE	28	WHITE-YELLOW
6	GRAY-BLUE	29	WHITE-VIOLET
7	GRAY-WHITE	30	BROWN
8	YELLOW	31	BROWN
9	BLUE	32	ORANGE
10	GREEN	33	ORANGE
11	GREEN	34	YELLOW
12	GRAY-VIOLET	35	YELLOW
13	GREEN	36	VIOLET
14	GREEN	37	VIOLET
15	RED	38	RED
16	WHITE	39	WHITE-BLUE
17	GRAY-RED	40	WHITE-GREEN
18	GRAY-RED	41	RED
19	GRAY-YELLOW	42	WHITE
20	WHITE	43	RED
21	BLACK	44	WHITE
22	YELLOW		
23	WHITE-BLACK	46	GREEN
48 THRU 51	BLACK	47	GRAY-RED
52	GREEN	53	RED
54	BLUE		

LEGEND

CONNECTIONS	MODEL PCØ5-C PCØ5-CA	PCØ5-P PCØ5-PA	PCØ5-R
PWR SUP TO READER	+5 TO READER LAMP POT -18V T.S.S.		SAME AS PCØ5-C PCØ5-CA
PWR SUP TO PUNCH	-3Ø V TO AIØV2 ON LOGIC 115V(HOT) TO TRIAC DRIVER 115V(NEUTRAL) TO PUNCH MOTOR	SAME AS PCØ5-C PCØ5-CA	
TRIAC DRVR TO PUNCH	115 V HOT (OUT) TO PUNCH MOTOR	SAME AS PCØ5-C PCØ5-CA	
PWR SUP TO TRIAC DRIVER	A11B2 TO -15 V INPUT A12C2 TO GND INPUT A11A2 TO +5V INPUT	SAME AS PCØ5-C PCØ5-CA	

QTY.	DESCRIPTION	PART NO	ITEM NO
	PARTS LIST		

PCØ5

UNLESS OTHERWISE SPECIFIED
DIMENSION IN INCHES
TOLERANCES
DECIMALS ± .005 FRACTIONS ± 1/64 ANGLES ± 0°30'
FINAL SURFACE QUALITY
REMOVE BURRS AND BREAK SHARP CORNERS

MATERIAL
FINISH

DRN. DATE
CHK'D DATE
ENG DATE
PROJ ENG. DATE
MOD DATE
NEXT ASSY
SCALE NONE
SHEET 1 OF 3

digital EQUIPMENT CORPORATION

TITLE POWER AND CONTROL SCHEMATIC

SIZE D CODE BS NUMBER PCØ5-A-1 REV

DIST

REV	CHANGE NO	CHK	
A	PC05-00003		E. LUTTIG
B	PC05-00005		E. LUTTIG
C	PC05-00016		T. TOUSE
D	PC04-00023		ADLMAN
E	PC04-00025		G. ADLEMAN
F	PC05-00021		LEIS
H	PC05-00022		E. LUTTIG
J	PC05-00024		M. LEIS
K	PC05-00028		A. WILLIAMS
L	PC05-00028		E. NEAL

REVISIONS

DEC FORM NO. 5000 1428A

25

This drawing and specifications, herein, are the property of Digital Equipment Corporation and shall not be reproduced or copied or used in whole or in part as the basis for the manufacture or sale of items without written permission.

MODEL	MODULE LIST
PCØ5-C, PCØ5-CA	A3-A12, B6-B12
PCØ5-P, PCØ5-PA	A5, A6, A7, A8, A12, B6, B10
PCØ5-R	A3, A4, A9, A10, A11, B7, B8, B9, B12

NOTES:

1. REF. C-AD-5408231-0-C
2. DELETE THIS MODULE WHEN CKT REV H (ETCH F) AND UP OF M710 IS USED.
3. M715 MUST BE OF REVISION K CIRCUIT (E ETCH) OR HIGHER.
4. G918 MUST BE OF REVISION B CIRCUIT (D ETCH) OR HIGHER.

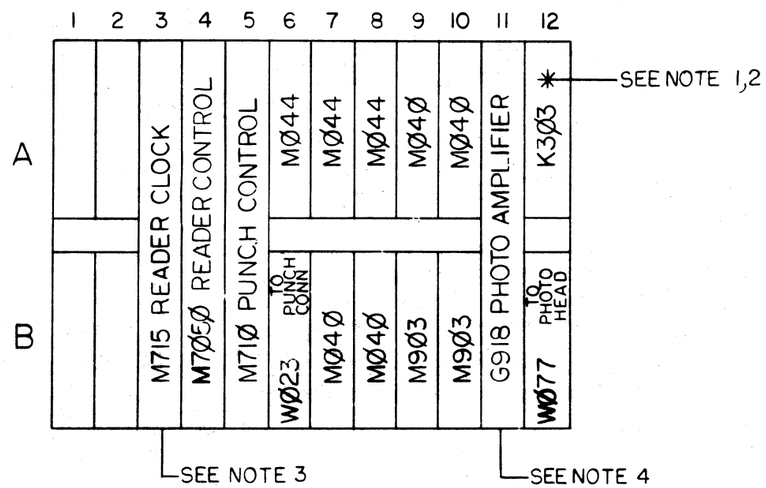

FIRST USED ON OPTION/MODEL	QTY.	DESCRIPTION	PART NO.	ITEM NO.
PCØ5		PARTS LIST		

UNLESS OTHERWISE SPECIFIED

UNLESS OTHERWISE SPECIFIED
DIMENSION IN INCHES
TOLERANCES
DECIMALS ± .005 FRACTIONS ± 1/64 ANGLES ± 0°30'
FINAL SURFACE QUALITY ✓
REMOVE BURRS AND BREAK SHARP CORNERS

MATERIAL

FINISH

DRN. S. Morrette DATE 6/18/69
CHK'D. R. Carnelly DATE 6/20/69
ENG. DATE 9/1/67
PROJ. ENG. DATE 9/1/67
PROD. DATE

NEXT HIGHER ASSY. A-ML-PCØ5-Ø

SCALE

SHEET 1 OF 1

digital EQUIPMENT CORPORATION MAYNARD, MASSACHUSETTS

TITLE MODULE UTILIZATION LIST PCØ5

SIZE	CODE	NUMBER	REV.
C	MJ	PCØ5-Ø-3	B

DIST.

REVISIONS			
CHK	CHANGE NO.	REV.	
	PCØ5-00001	A	G. BECKNER 9-3-67
	PCØ5-00021	B	LEIS 1-24-71

DEC FORM NO. DRC 1030

MJ PCØ5-Ø-3 B

26

THIS SCHEMATIC IS FURNISHED ONLY FOR TEST AND MAINTENANCE PURPOSES. THE CIRCUITS ARE PROPRIETARY IN NATURE AND SHOULD BE TREATED ACCORDINGLY.
COPYRIGHT 1969 BY DIGITAL EQUIPMENT CORPORATION

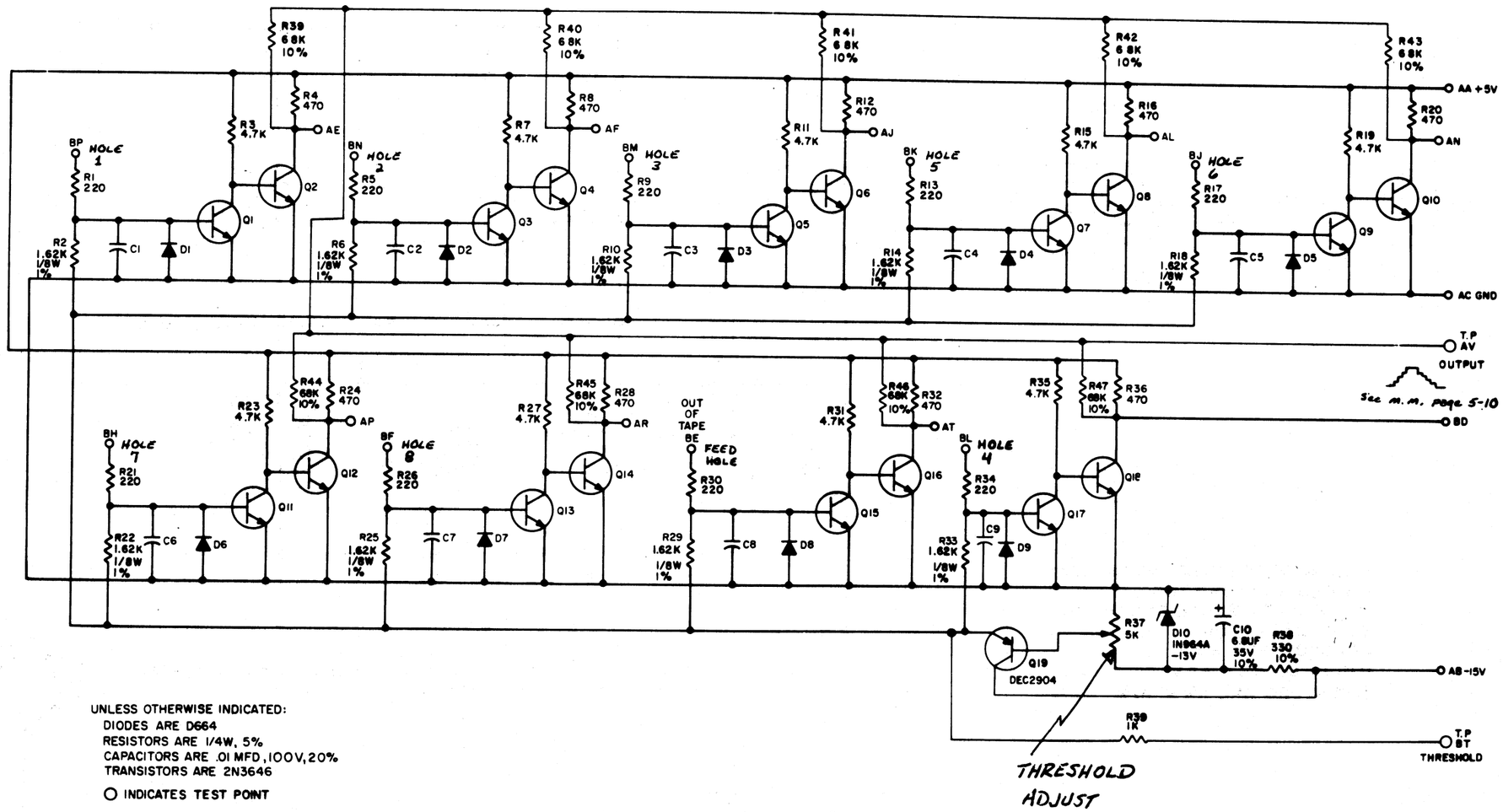

UNLESS OTHERWISE INDICATED:
DIODES ARE D664
RESISTORS ARE 1/4W, 5%
CAPACITORS ARE .01 MFD, 100V, 20%
TRANSISTORS ARE 2N3646

○ INDICATES TEST POINT

REVISIONS		
CHK	CHG NO	REV
	00001	A
	00002	
	00003	B

DRN. R.BUTLER DATE 4/1/69
CHK'D DATE 4/14/69
ENG. R.Ot-J DATE 6/14/69
PROD. DATE

TRANSISTOR & DIODE CONVERSION CHART

DEC	EIA	DEC	EIA
2N3646	2N3009	1N964A -13V	SAME
D664	1N3606	DEC2904	2N1132

digital EQUIPMENT CORPORATION MAYNARD, MASSACHUSETTS

TITLE PHOTO TRANSISTOR AMPLIFIER G918

SIZE	CODE	NUMBER	REV
C	CS	G918-0-1	B

PRINTED CIRCUIT REV D

DEC FORM NO. DRC 102

27

SIZE	CODE	NUMBER	REV.
B	CS	M040-0-1	E

THIS SCHEMATIC IS FURNISHED ONLY FOR TEST AND MAINTENANCE PURPOSES. THE CIRCUITS ARE PROPRIETARY IN NATURE AND SHOULD BE TREATED ACCORDINGLY.
COPYRIGHT 1967 BY DIGITAL EQUIPMENT CORPORATION

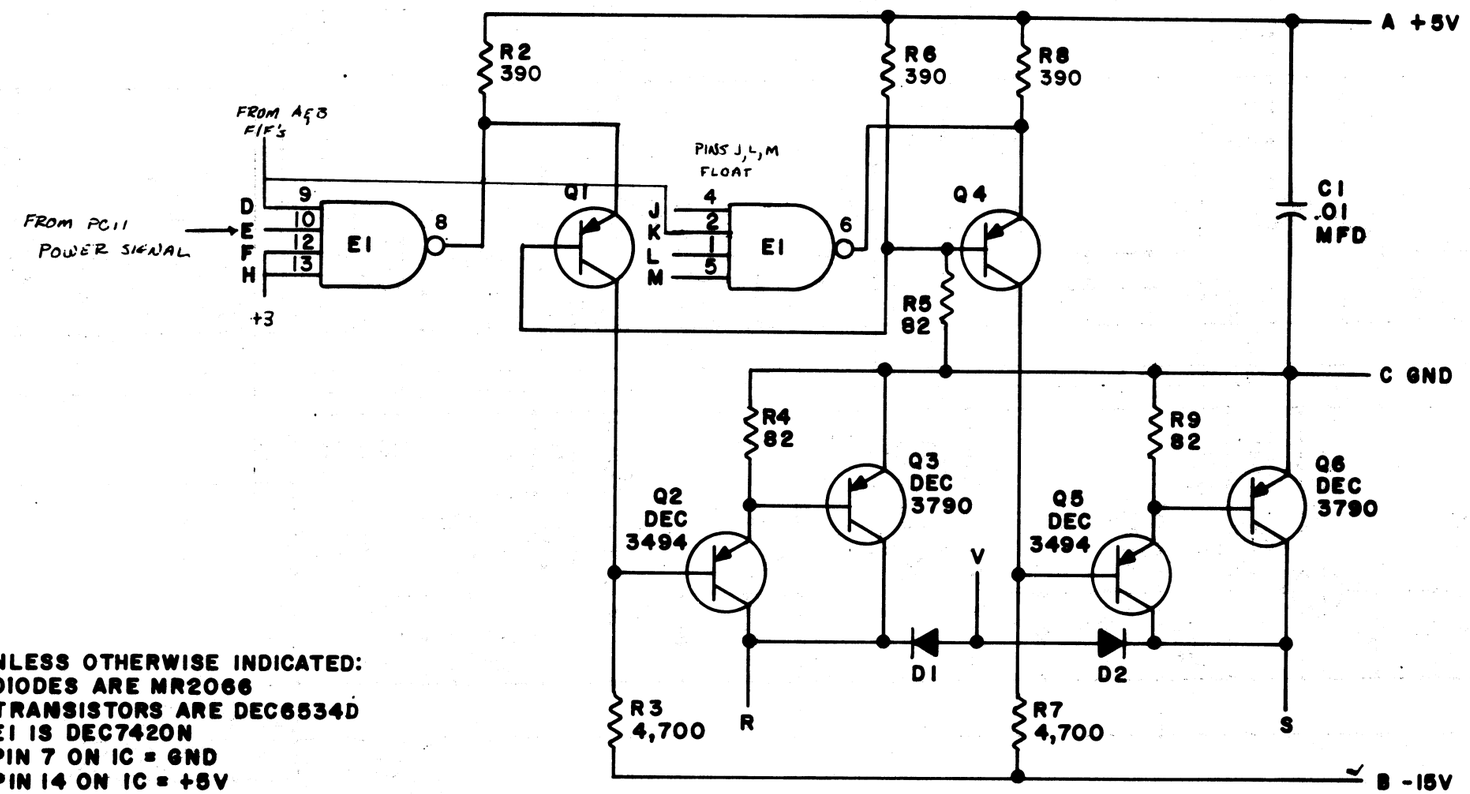

UNLESS OTHERWISE INDICATED:
DIODES ARE MR2066
TRANSISTORS ARE DEC6534D
E1 IS DEC7420N
PIN 7 ON IC = GND
PIN 14 ON IC = +5V
RESISTORS ARE 1/4W, 10%

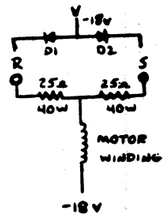

PARTS LIST A-PL-M040-0-0

REVISIONS		
REV.	CHG NO.	CHK
E	00001	
	00002	

DRN. M. Keller	DATE 9-14-67		
CHK'D	DATE 9/22/67		
ENG.	DATE 9/19/67		
PROD.	DATE		

TRANSISTOR & DIODE CONVERSION CHART

DEC	EIA	DEC	EIA
DEC3494	SAME		
DEC3790	2N3790		
DEC6534D	MPS6534		
D662	1N645		
MR2066	1N4003		

digital EQUIPMENT CORPORATION
MAYNARD, MASSACHUSETTS

TITLE
SOLENOID DRIVER M040

SIZE	CODE	NUMBER	REV.
B	CS	M040-0-1	E

PRINTED CIRCUIT REV. E

DEC FORM NO. DRB 102

DIST. 230 234,436 3 PINK

28

SIZE	CODE	NUMBER	REV.
B	CS	M044-0-1	C

THIS SCHEMATIC IS FURNISHED ONLY FOR TEST AND MAINTENANCE PURPOSES. THE CIRCUITS ARE PROPRIETARY IN NATURE AND SHOULD BE TREATED ACCORDINGLY.
COPYRIGHT 1969 BY DIGITAL EQUIPMENT CORPORATION

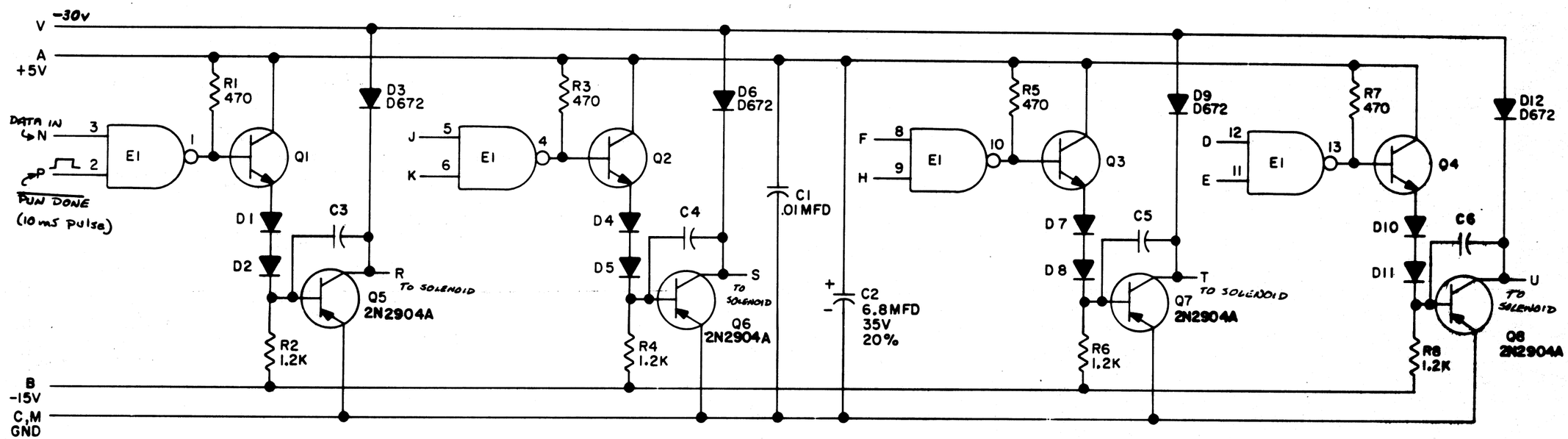

UNLESS OTHERWISE INDICATED.
RESISTORS ARE 1/4W, 10%
DIODES ARE D664
E1 IS DEC7401N
TRANSISTORS ARE DEC3009B
PIN 7 ON EACH IC = GND
PIN 14 ON EACH IC = +5V
CAPACITORS ARE 100pf, 100V, 5%

REVISIONS		
REV.	B	C
CHG NO.	00001	00002
CHK		

DRN.	DATE
CHK'D	DATE 6/23/69
ENG.	DATE
PROD.	DATE

TRANSISTOR & DIODE CONVERSION CHART

DEC	EIA	DEC	EIA
D664	1N3606		
2N2904A	2N2904		
DEC3009B	2N3009		

digital EQUIPMENT CORPORATION
MAYNARD, MASSACHUSETTS

TITLE 4-100MA SOLENOID DRIVER M044

SIZE	CODE	NUMBER	REV.
B	CS	M044-0-1	C

PRINTED CIRCUIT REV. B

DEC FORM NO.
DRB 102

THIS SCHEMATIC IS FURNISHED ONLY FOR TEST AND MAINTENANCE PURPOSES. THE CIRCUITS ARE PROPRIETARY IN NATURE AND SHOULD BE TREATED ACCORDINGLY
COPYRIGHT 1970 BY DIGITAL EQUIPMENT CORPORATION

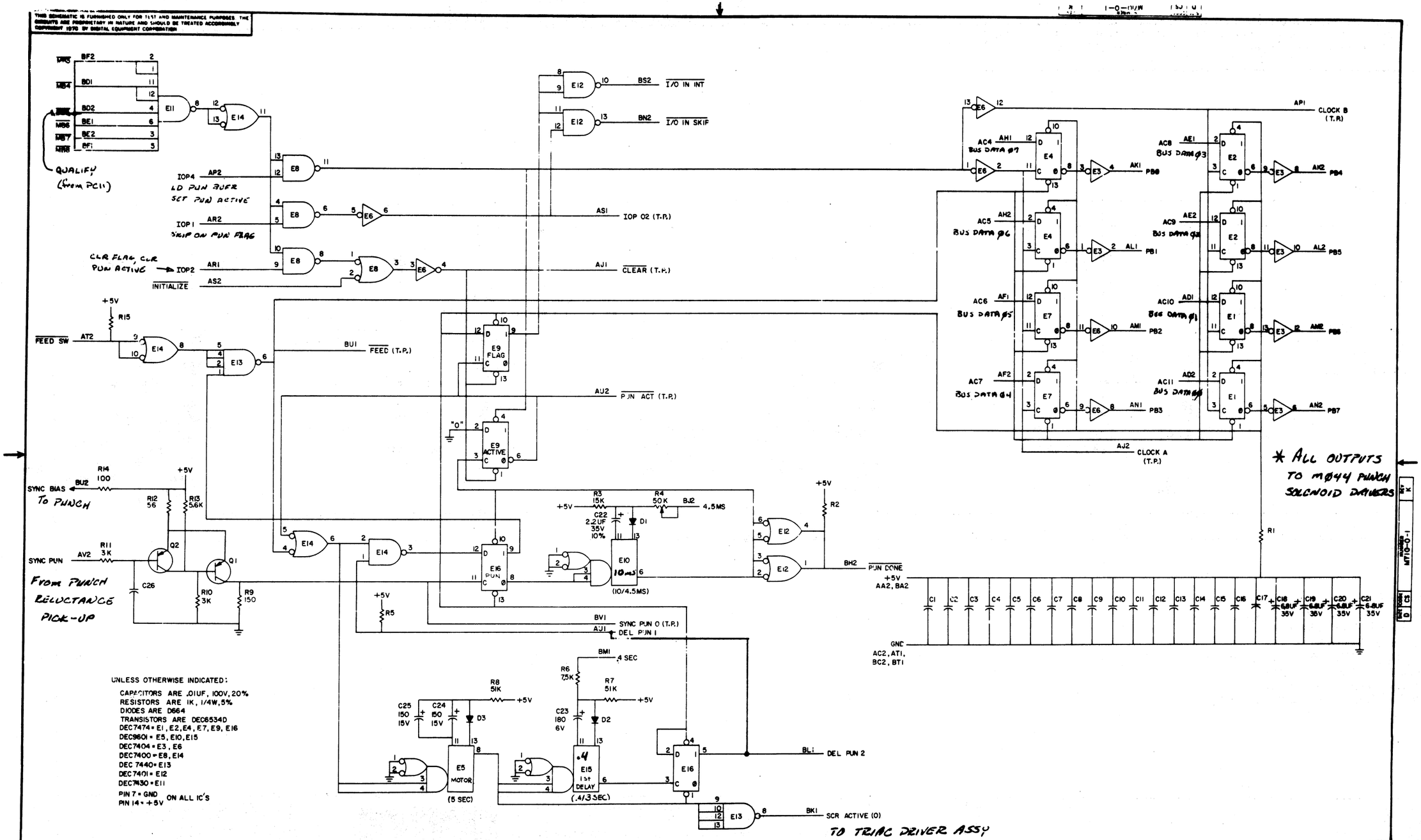

TRANSISTOR & DIODE CONVERSION CHART			
DEC	EIA	DEC	EIA
D664	IN3606		
DEC6534D	NONE		

EQUIPMENT CORPORATION
MAYNARD MASSACHUSETTS

TITLE: PUNCH CONTROL M710

SIZE D | CODE CS | NUMBER M710-0-1 | REV K

PRINTED CIRCUIT REV H

REVISIONS: CHG NO 00005 REV K; 00006 J; 00007 K

DATE 1-6-71

THIS SCHEMATIC IS FURNISHED ONLY FOR TEST AND MAINTENANCE PURPOSES. THE CIRCUITS ARE PROPRIETARY IN NATURE AND SHOULD BE TREATED ACCORDINGLY.
COPYRIGHT 1967 BY DIGITAL EQUIPMENT CORPORATION

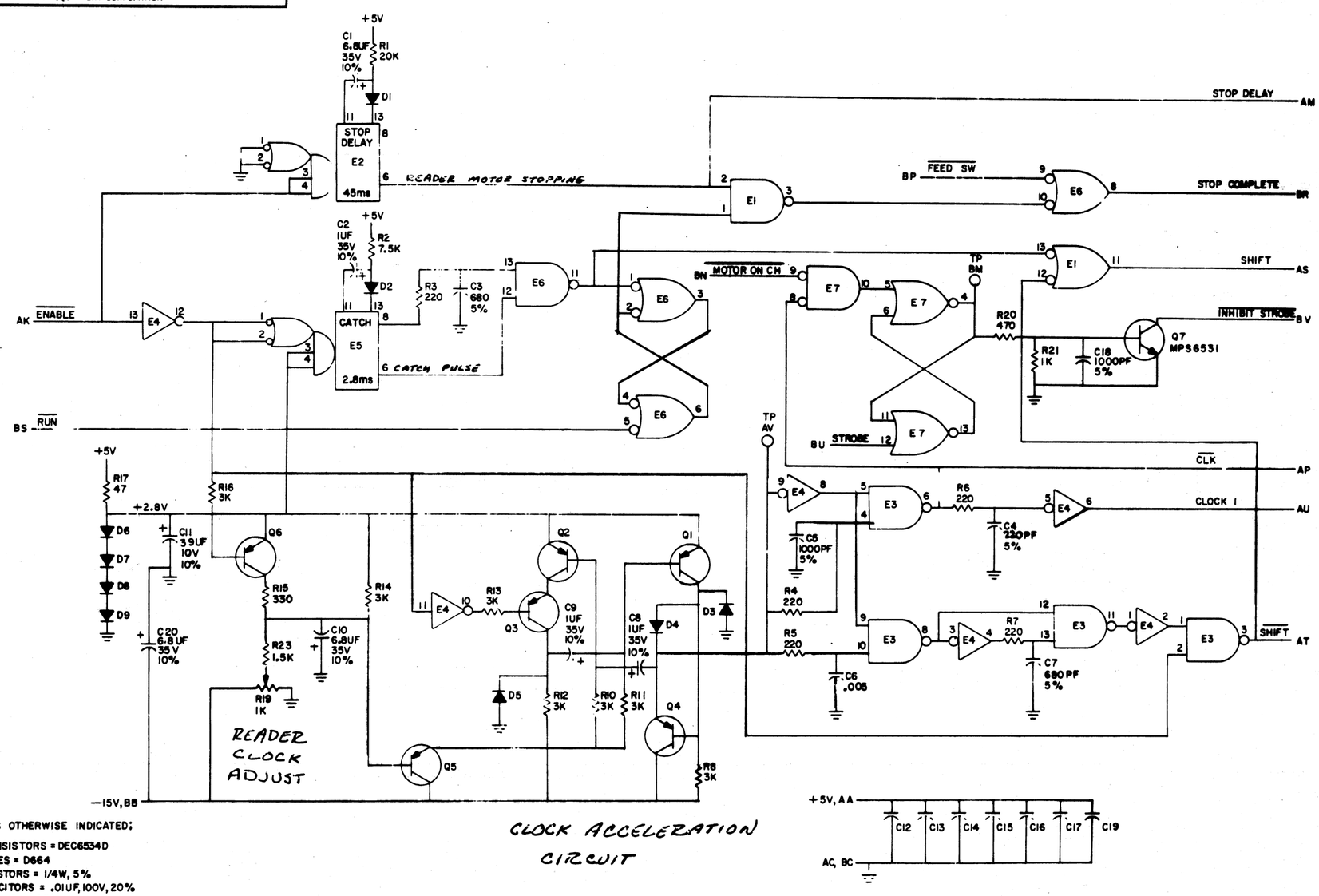

UNLESS OTHERWISE INDICATED;

TRANSISTORS = DEC6534D
DIODES = D664
RESISTORS = 1/4W, 5%
CAPACITORS = .01UF, 100V, 20%
E1, E3, E6 = DEC7400
E4 = DEC7404
E2, E5 = DEC9601
PIN 7 = GND
PIN 14 = +5V ON ALL IC'S
E7 = DEC7402

REVISIONS	CHK	CHG NO.	REV.
	AY	00008	E
REV B REDR B CANCELS ECO 00005		00006	K
		00007	L
		00008	

DRN. M. HALLER DATE 10/16/67
CHK'D R. SILVERMAN DATE 11/2/67
ENG. R. G. SOBER DATE 11/2/67
PROD. DATE

TRANSISTOR & DIODE CONVERSION CHART

DEC	EIA	DEC	EIA
DEC6534D	MPS6534	IN758	SAME
D664	IN3606		
DEC6531	MPS6531		

digital EQUIPMENT CORPORATION MAYNARD MASSACHUSETTS

TITLE READER CLOCK M715

SIZE C | CODE CS | NUMBER M715-0-1 | REV L

PRINTED CIRCUIT REV. F

DEC FORM NC DRC 102

M715-0-1 REV L CODE CS SIZE C

31

THIS SCHEMATIC IS FURNISHED ONLY FOR TEST AND MAINTENANCE PURPOSES. THE CIRCUITS ARE PROPRIETARY IN NATURE AND SHOULD BE TREATED ACCORDINGLY
COPYRIGHT 1971 BY DIGITAL EQUIPMENT CORPORATION

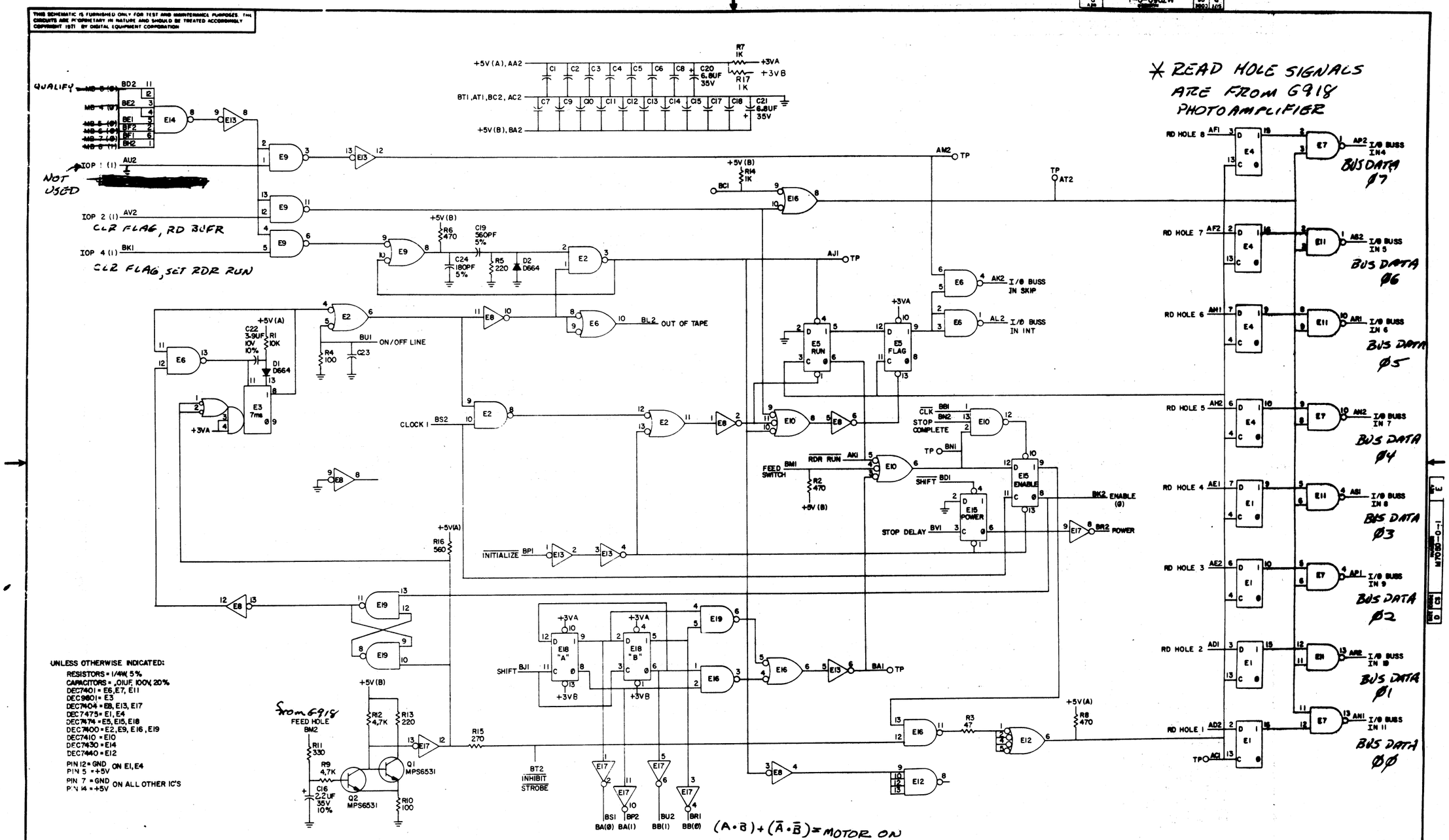

UNLESS OTHERWISE INDICATED:
RESISTORS = 1/4W, 5%
CAPACITORS = .01UF, 100V, 20%
DEC7401 = E6, E7, E11
DEC9601 = E3
DEC7404 = E8, E13, E17
DEC7475 = E1, E4
DEC7474 = E5, E15, E18
DEC7400 = E2, E9, E16, E19
DEC7410 = E10
DEC7430 = E14
DEC7440 = E12
PIN 12 = GND ON E1, E4
PIN 5 = +5V
PIN 7 = GND
PIN 14 = +5V ON ALL OTHER IC'S

TRANSISTOR & DIODE CONVERSION CHART			
DEC	EIA	DEC	EIA
MPS6531	MPS6531	D664	1N3609

TITLE: READER CONTROL
DIGITAL EQUIPMENT CORPORATION MAYNARD, MASSACHUSETTS
SIZE D | CODE CS | NUMBER M7050-0-1 | REV E

32

SIZE	CODE	NUMBER	REV.
B	CS	5408918-0-1	A

THIS SCHEMATIC IS FURNISHED ONLY FOR TEST AND MAINTENANCE PURPOSES. THE CIRCUITS ARE PROPRIETARY IN NATURE AND SHOULD BE TREATED ACCORDINGLY.
COPYRIGHT 1970 BY DIGITAL EQUIPMENT CORPORATION

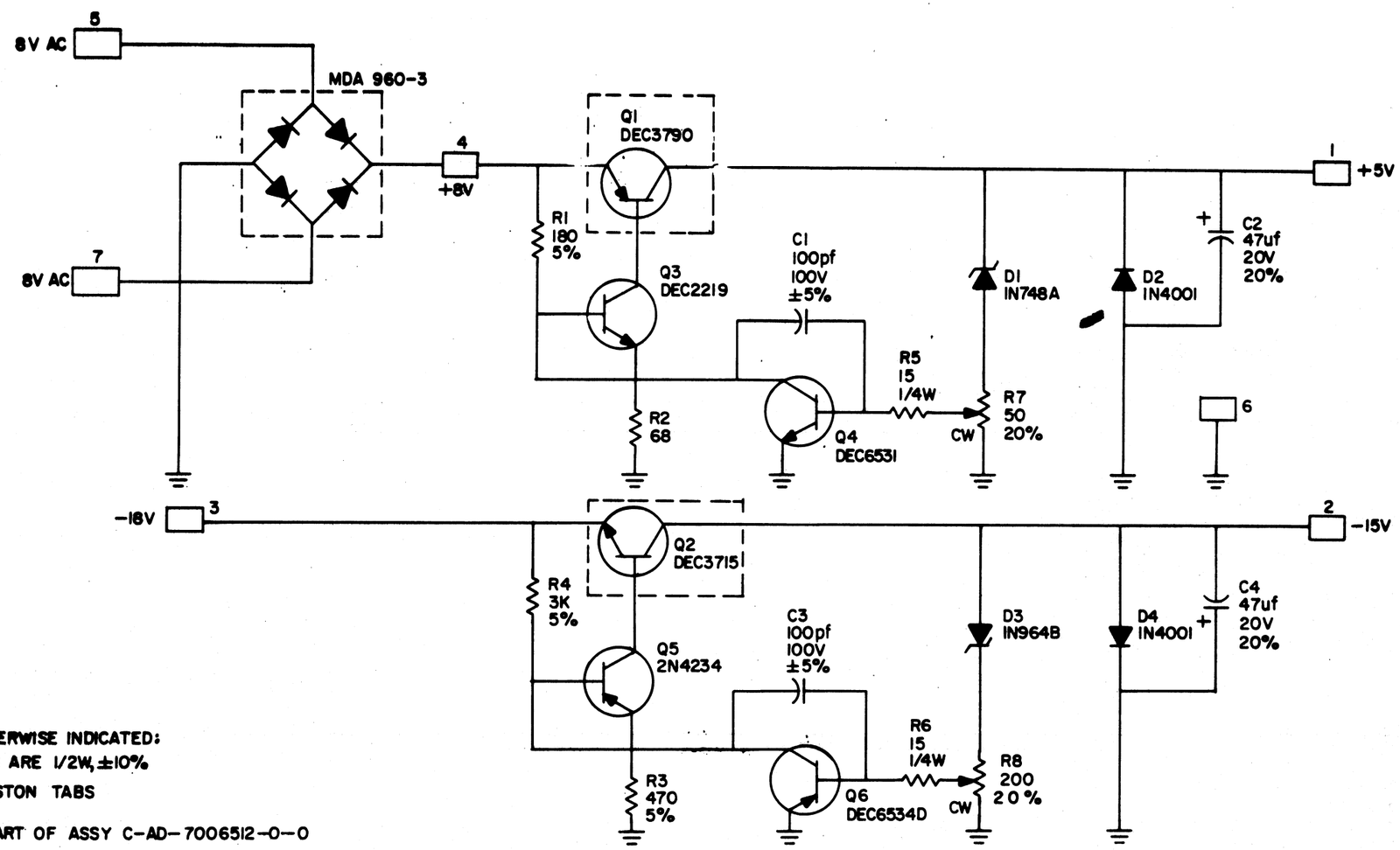

UNLESS OTHERWISE INDICATED:
RESISTORS ARE 1/2W, ±10%
= FASTON TABS
PART OF ASSY C-AD-7006512-0-0

REVISIONS	REV.	CHG NO.	CHK

DRN.	NANCY MOORE	DATE	7/8/70
CHK'D	Andersen	DATE	8/8/70
ENG.		DATE	10/12/70
PROD.		DATE	

TRANSISTOR & DIODE CONVERSION CHART

DEC	EIA	DEC	EIA
DEC3790-2	2N3790	DEC6531	MPS6531
DEC2219	2N2219	1N748A	SAME
DEC3715	2N3715	1N964B	SAME
2N4234	2N4234	1N4001	SAME
DEC6534D	MPS6534		

digital EQUIPMENT CORPORATION
MAYNARD, MASSACHUSETTS

TITLE PCO REGULATOR 5408918

SIZE	CODE	NUMBER	REV.
B	CS	5408918-0-1	A

PRINTED CIRCUIT REV. B

DEC FORM NO. DRB 102

DIST. 324, 434, 435 PNK 5

33

SIZE	CODE	NUMBER	REV.
B	CS	5408384-0-1	B

THIS SCHEMATIC IS FURNISHED ONLY FOR TEST AND MAINTENANCE PURPOSES. THE CIRCUITS ARE PROPRIETARY IN NATURE AND SHOULD BE TREATED ACCORDINGLY.
COPYRIGHT 1969 BY DIGITAL EQUIPMENT CORPORATION

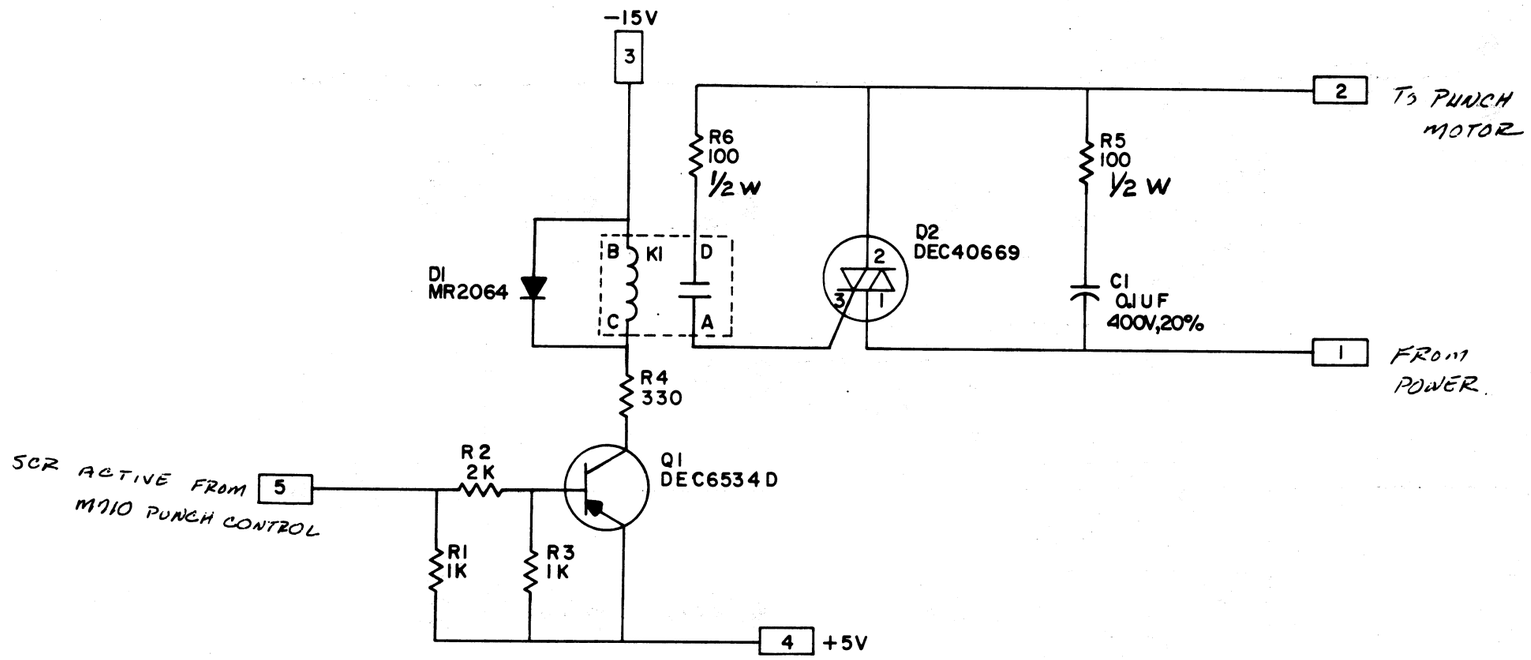

UNLESS OTHERWISE INDICATED:
RELAY IS DEC40034
TABS ARE AMP. # 41290
RESISTORS ARE 1/4W, 5%

REVISIONS		
REV.	B	
CHG NO.	REV. & REDR PN 400001	
CHK		

DRN.	M. HALLER	DATE	6-20-69
CHK'D	T.A. NALETTE	DATE	6-24-69
ENG.	G. BECKNER	DATE	11-19-69
PROD.		DATE	

TRANSISTOR & DIODE CONVERSION CHART

DEC	EIA	DEC	EIA
		DEC6534D	MPS6534

digital EQUIPMENT CORPORATION
MAYNARD, MASSACHUSETTS

TITLE TRIAC SW ASSY (PC05)

SIZE	CODE	NUMBER	REV.
B	CS	5408384-0-1	B

PRINTED CIRCUIT REV. B

DEC FORM NO.
DRB 102

COPYRIGHT [redacted]
DIGITAL EQUIPMENT CORPORATION

NOTES:

1. PIN NOTATION THROUGHOUT IS ORDERED UPON MODULE PLACEMENT IN THE SYSTEM UNIT. MODULE REFERENCE ALONE IS OBTAINED BY CONVERTING THE 1ST LETTER ACCORDING TO THE PIN NOMENCLATURE CHART AT THE RIGHT.
2. JUMPERS TO BE USED AT CONNECTIONS A3-A12, V2-V8, J1-J14, N1.
3. DEC 8640'S WERE PHASED IN AS 380 REPLACEMENTS. 380 FAILURES SHOULD BE REPLACED BY 8640'S.

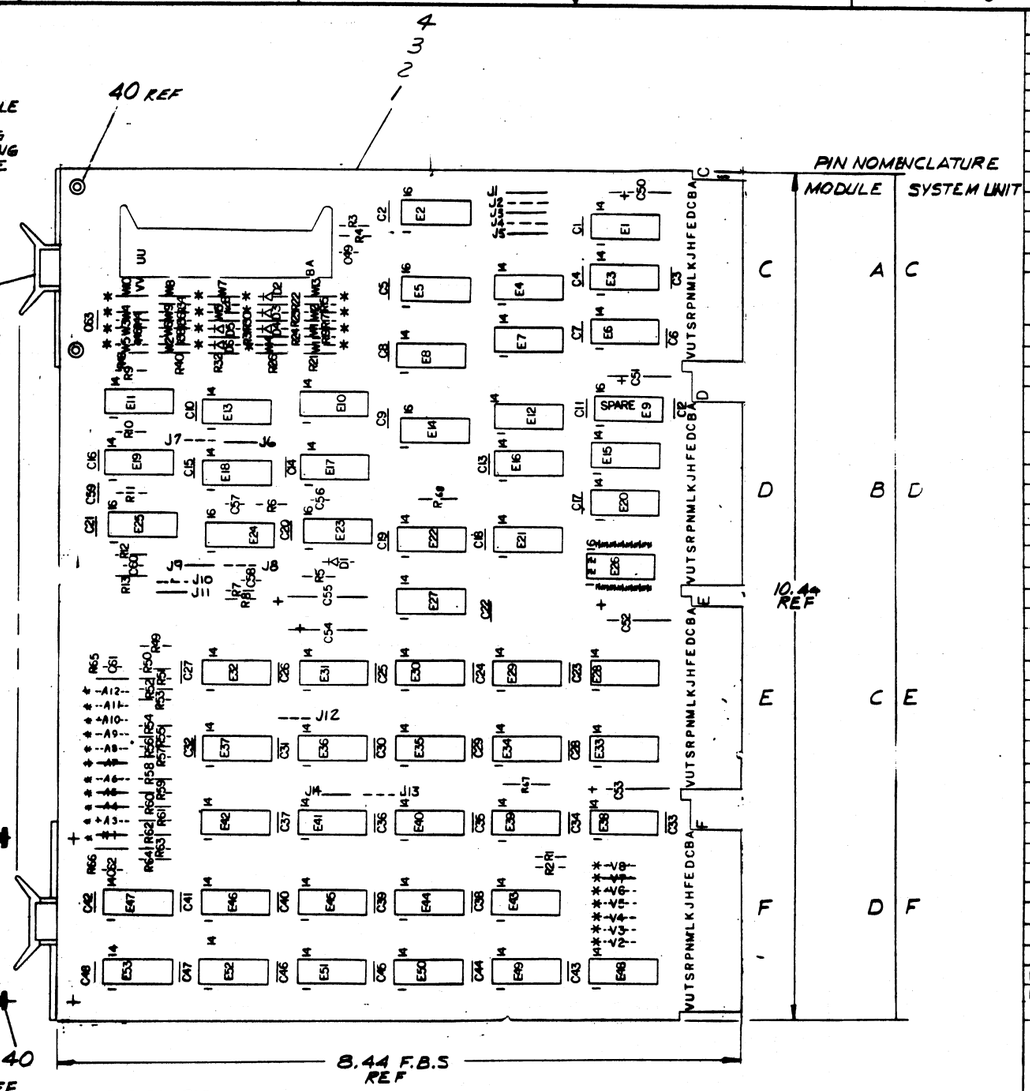

JUMPER TABLE

JUMPER DESIGNATION	UNIT NO. LS11	LV11	LP11	LA11
J1	OUT	IN	OUT	IN
J2	IN	OUT	IN	OUT
J3	IN	IN	IN	IN
J4	OUT	OUT	OUT	OUT
J5	IN	IN	IN	IN
J6	IN	OUT	IN	OUT
J7	OUT	IN	OUT	IN
J8	OUT	IN	IN	IN
J9	IN	OUT	OUT	OUT
J10	OUT	IN	OUT	IN
J11	IN	OUT	IN	OUT
J12	OUT	OUT	OUT	OUT
J13	OUT	OUT	OUT	OUT
J14	IN	IN	IN	IN
W5	OUT	IN	OUT	IN
W1-W4, W6-W15	IN	IN	IN	IN
N1	IN	IN	IN	IN

IC PIN LOCATIONS

IC TYPE	GND	+5V
74123	8	16
74174	8	16
74175	8	16
8640	1	8

GND AND 5V ARE USUALLY PIN 7 AND 14 RESPECTIVELY. EXCEPTIONS ARE STATED ABOVE

PARTS LIST

QTY	REF DESIGNATION	DESCRIPTION	PART NO.	ITEM NO.
		X-Y COORDINATE HOLE LOCATION	K-CO-07280-0-4	1
		ASSY/DRILLING HOLE LAYOUT	B-AH-07280-0-5	2
		MODULE ECO HISTORY	B-HH-07280-0-6	3
1		ETCHED CIRCUIT	5018232	4
3	C59, C60, C57	CAP 47PF, 100V 5% D.M.	1000011	5
1	C62	CAP 330PF 100V 5% D.M.	1000023	6
1	C61	CAP 470PF 100V 5% D.M.	1000024	7
4	C50-C53	CAP 6.8UF 35V 20% S.TANT	1005306	8
50	C1-C48, C63	CAP .01UF 100V 20% DISC	1001610	9
2	C54, C55	CAP 22UF 35V 20% S.TANT	1002433	10
6	D1-D6	DIODE D664	1100114	11
1	E26	SOCKET I.C.	1209938	12
1		CONN. DERG 40 PIN	1209961	13
1	R66	RES. 47, ¼W, 5%	1300202	14
1	R65	RES. 100 ¼W, 5%	1300220	15
1	R3	RES. 330 ¼W, 5%	1300290	16
1	R1	RES. 390, ¼W, 5%	1300300	17
22	R15, R17, R19, R21-R24, R26, R28, R30-R32, R34, R36, R38, R40, R44, R46, R48, R50, R51, R63	RES. 1K, ¼W, 5%	1300305	18
18	R5, R7, R9, R10, R13, R16, R52-R62, R64,	RES. 10K, ¼W, 5%	1300470	19
2	R2, R67	RES. 100, ½W, 5%	1301322	20
1	R4	RES. 750, ¼W, 5%	1301401	21
4	R6, R8, R11, R12	RES. 30K, ¼W, 5%	1302304	22
1	E17	IC DEC 7474	1000047	23
3	E16, E45, E52	IC DEC 7400	1000075	24
3	E4, E7, E8	IC DEC 7430	1000078	25
3	E27, E35, E44	IC DEC 7402	1000084	26
1	E36	IC DEC 74H00	1000086	27
10	E1, E3, E18, E20, E28, E29, E30, E33, E34, E39	IC DEC 8640	1911469	28
3	E51, E47, E53	IC DEC 74H74	1000087	29
1	E22	IC DEC 7404	1000088	30
5	E6, E31, E38, E43, E48	IC DEC 8881	1000706	31
3	E32, E37, E42	IC DEC 8242	1000712	32
3	E12, E40, E41	IC DEC 8815	1000713	33
4	E10, E11, E13, E19	IC DEC 7437	1010001	34
4	E15, E21, E49, E50	IC DEC 7400	1010100	35
3	E23, E24, E25	IC DEC 74123	1010430	36
2	E2, E9	IC DEC 74175	1010051	37
1	E14	IC DEC 74174	1010052	38
8		EYELET #GS4-7 ED STIMPSON	9000732	39
4		HANDLE FLIP CHIP-MAGENTA	9000337-00	40
1	E46	IC DEC 74H04	1909931	41
			-	42
2	C56, C58	CAP 100 PF, 100V, 5% DM	1000016	43
14	W1-W4, W6-W15	INSULATED JUMPERS	9009185 *	44
12	A4, A5, A7, V7, J1, J3, J5, J6, J9, J11, J14, N1	JUMPER, BUSS WIRE	9107560-01	45

ETCH BOARD REV D

FIRST USED ON OPTION MODEL: PDP11

DEC NO.	EIA NO.	DEC NO.	EIA NO.

SEMICONDUCTOR CONVERSION CHART

REV	CHANGE NO.	CHK
L	M7258-00009	L. CONDON
K	M7258-00008	L. CONDON
J	M7258-00007	L. CONDON
H	M7258-00006	L. CONDON
F	M7258-00005	L. CONDON
E	M7258-00004	L. CONDON
D	M7258 33333	L. CONDON
C	M7258-00002	L. CONDON
B	M7258-00001	L. CONDON

REVISIONS

T. UPTON 1/9/74

DWN. DATE
CHK'D DATE
ENG. DATE
PROJ. ENG. DATE
PROD. DATE
NEXT HIGHER ASSY.
SCALE
SHEET 1 OF 4

[redacted] EQUIPMENT CORPORATION
MAYNARD, MASSACHUSETTS

TITLE: PRINTER INTERFACE P-1

SIZE D CODE CS M7258-0-1 REV C

DIST.

35

COPYRIGHT © DIGITAL EQUIPMENT CORPORATION

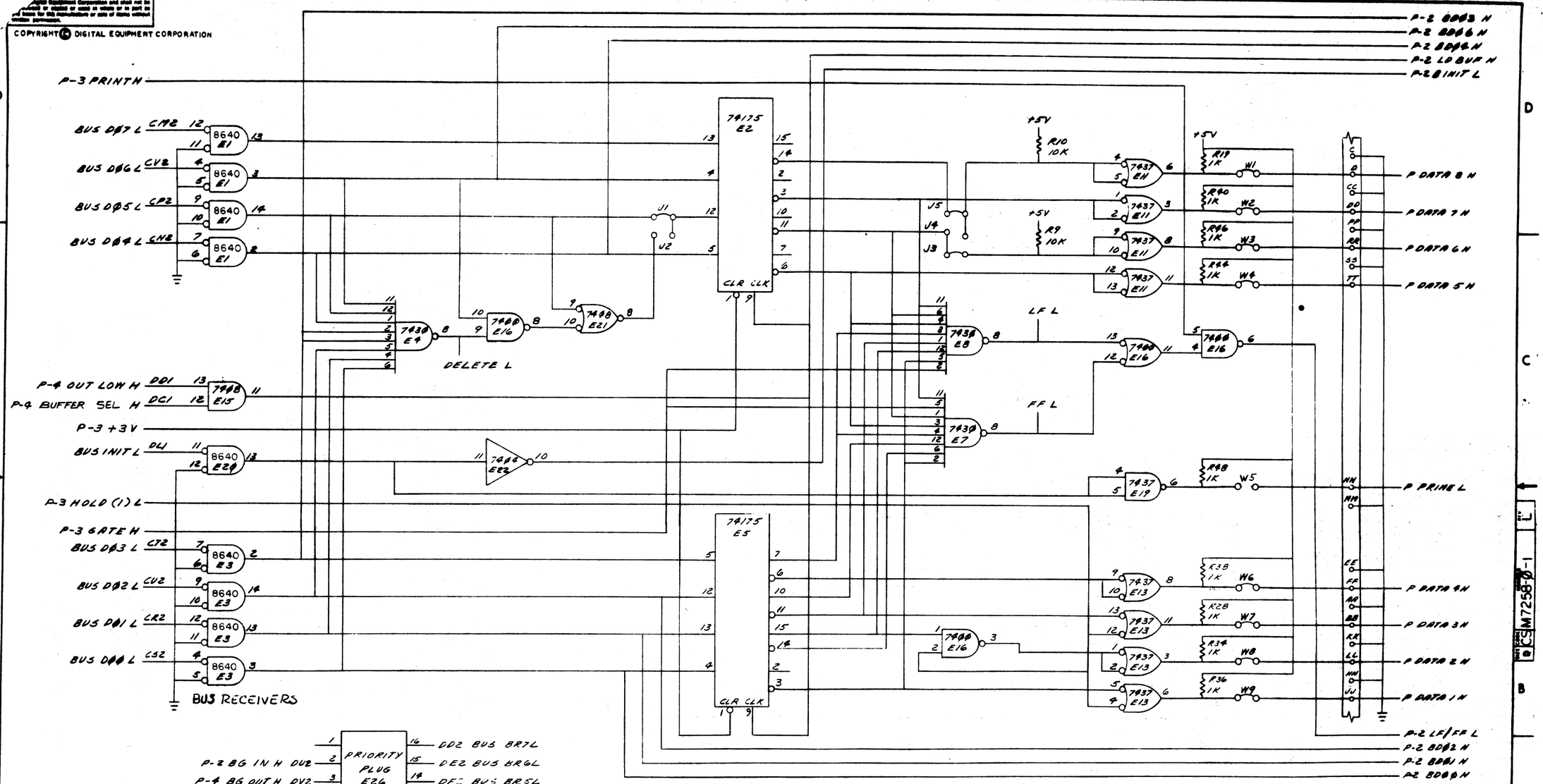

FIRST USED ON OPTION/MODEL	QTY	DESCRIPTION	PART NO	ITEM NO
PDP11		PARTS LIST		

UNLESS OTHERWISE SPECIFIED DIMENSION IN INCHES TOLERANCES
DECIMALS: XXX ±.005, XX ±.02, X ±.1 — ANGLES: ±0°30'
REMOVE BURRS AND BREAK SHARP CORNERS SURFACE QUALITY ✓

		DATE
DRN		7-25-72
CHK'D		11-4-72
ENG		
PROJ ENG		
PROD		

digital EQUIPMENT CORPORATION MAYNARD MASSACHUSETTS

TITLE: PRINTER INTERFACE (DATA REGISTER) P-2

MATERIAL
FINISH
NEXT HIGHER ASSY
SCALE
SHEET 2 OF 4

SIZE D | CODE CS | NUMBER M7258 Ø-1 | REV L | DIST

REVISIONS			
CHK	CHANGE NO		REV
		Corrected Pin Nos.	L

DRAWING 40-822 1964D
DEC FORM NO

COPYRIGHT © DIGITAL EQUIPMENT CORPORATION

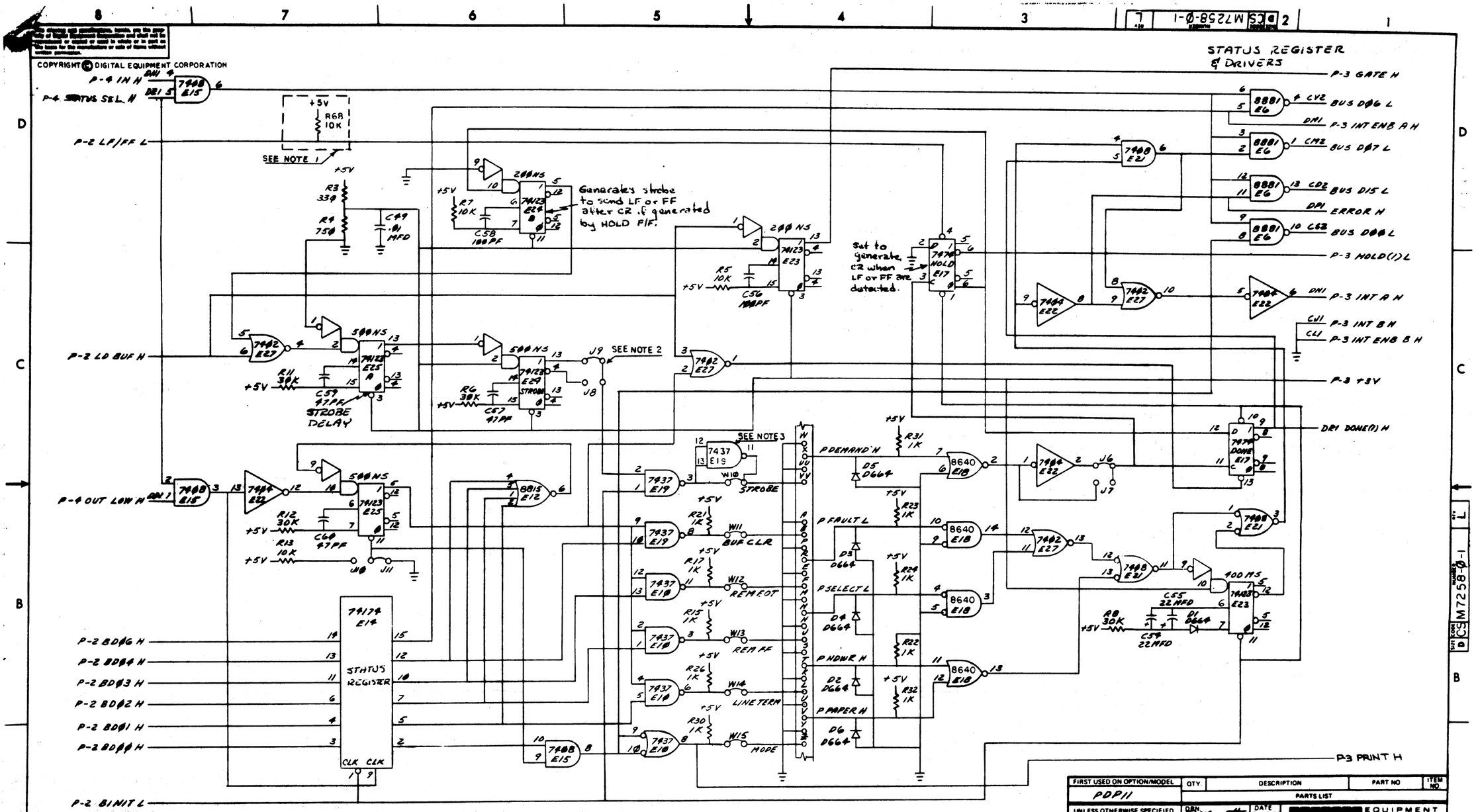

NOTE:
1. CUT ETCH SIDE I AT E16-6 ONLY WHEN A LP05 WITH VFU IS USED. FOR REWORK INSTRUCTIONS FOR R68 & E19 11,12,13, SEE ECO M7258-00009.
2. J9 ALWAYS IN AND J8 ALWAYS OUT.
3. FOR JUMPER SELECTION, W10 TO BE TREATED AS J9 AND A WIRE FROM E19 PIN 11 TO W10 (AS SHOWN ABOVE)

3. (CONT'D) IS TO BE TREATED AS J8. REFER TO JUMPER TABLE ON COVER SHEET FOR JUMPER SELECTIONS.

FIRST USED ON OPTION/MODEL	QTY	DESCRIPTION	PART NO	ITEM NO
PDP11		PARTS LIST		

UNLESS OTHERWISE SPECIFIED DIMENSION IN INCHES TOLERANCES
DECIMALS: XXX ± .005, XX ± .02, X ± .1
ANGLES: ± 0° 30'
REMOVE BURRS AND BREAK SHARP CORNERS SURFACE QUALITY ✓
MATERIAL
FINISH

DRN DATE 9-29-72
CHK'D DATE 11-14-72
ENG DATE
PROJ ENG DATE
PROD DATE

digital EQUIPMENT CORPORATION MAYNARD MASSACHUSETTS

TITLE PRINTER INTERFACE (PRINTER CONTROL) P-3

NEXT HIGHER ASSY
SCALE
SHEET 3 OF 4

SIZE D CODE CS NUMBER M7258-0-1 REV L
DIST

REV	CHANGE NO	CHK
1	[illegible]	

DEC FORM NO DRD 111-B

37

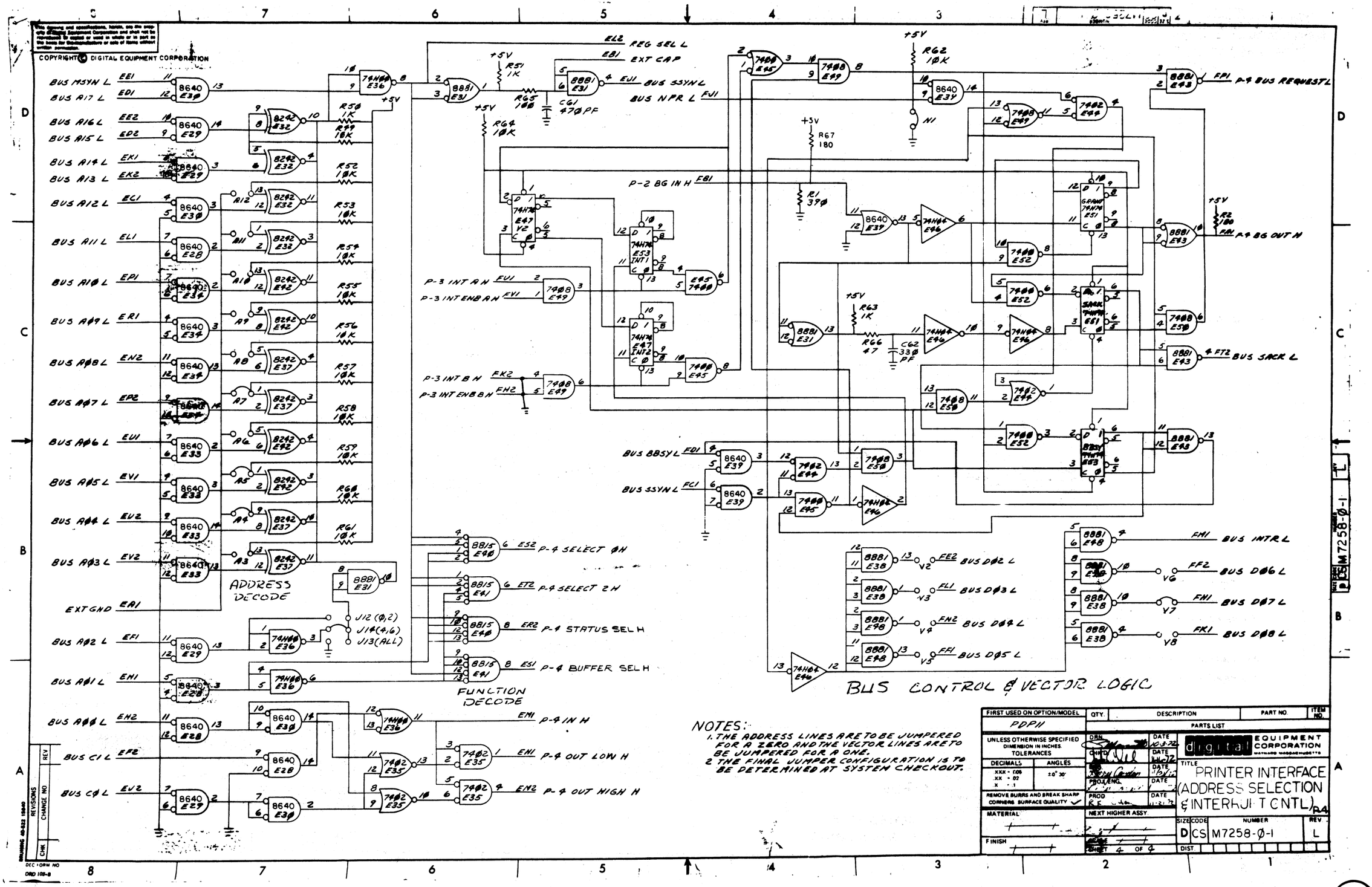
COPYRIGHT © DIGITAL EQUIPMENT CORPORATION
BUS MSYN L
BUS A17 L
BUS A16 L
BUS A15 L
BUS A14 L
BUS A13 L
BUS A12 L
BUS A11 L
BUS A10 L
BUS A09 L
BUS A08 L
BUS A07 L
BUS A06 L
BUS A05 L
BUS A04 L
BUS A03 L
EXT GND
BUS A02 L
BUS A01 L
BUS A00 L
BUS C1 L
BUS C0 L
ADDRESS DECODE
REG SEL L
EXT CAP
BUS SSYN L
BUS NPR L
P-2 BG IN H
P-3 INT A H
P-3 INT ENB A H
P-3 INT B H
P-3 INT ENB B H
P-4 BUS REQUEST L
P-4 BG OUT H
BUS SACK L
BUS BBSY L
BUS SSYN L
P-4 SELECT 0 H
P-4 SELECT 2 H
P-4 STATUS SEL H
P-4 BUFFER SEL H
FUNCTION DECODE
P-4 IN H
P-4 OUT LOW H
P-4 OUT HIGH H
BUS INT R L
BUS D02 L
BUS D03 L
BUS D04 L
BUS D05 L
BUS D06 L
BUS D07 L
BUS D08 L
BUS CONTROL & VECTOR LOGIC
NOTES:
1. THE ADDRESS LINES ARE TO BE JUMPERED FOR A ZERO AND THE VECTOR LINES ARE TO BE JUMPERED FOR A ONE.
2. THE FINAL JUMPER CONFIGURATION IS TO BE DETERMINED AT SYSTEM CHECKOUT.
FIRST USED ON OPTION/MODEL
PDP11
QTY.
DESCRIPTION
PART NO.
ITEM NO.
PARTS LIST
UNLESS OTHERWISE SPECIFIED DIMENSION IN INCHES. TOLERANCES
DECIMALS
ANGLES
REMOVE BURRS AND BREAK SHARP CORNERS SURFACE QUALITY
MATERIAL
FINISH
DRN.
CHKD.
PROJ. ENG.
PROD.
NEXT HIGHER ASSY.
SHEET 4 OF 4
digital EQUIPMENT CORPORATION
MAYNARD MASSACHUSETTS
TITLE
PRINTER INTERFACE (ADDRESS SELECTION & INTERRUPT CNTL) P4
SIZE
CODE
NUMBER
REV.
D CS M7258-0-1 L
DIST
M7258-0-1

WIRE TABLE

ITEM NO	DESCRIPTION AWG	COLOR	FROM CONNECTION	WITH	TO CONNECTION	WITH
4	22	RED	P1-M	2	P2-C	6
		YEL	J		D	
		RED	D		E	
		BLU	B		F	
		BLU	T		H	
		BLK	F		J	
		BLK	N		K	
		GRN	L		L	
		RED	T		M	
		WHT	R		N	
		BLK	X		P	
		WHT	V		R	
		BLK	b		S	
		RED	Z		T	
		BLK	k		U	
		BRN	r		V	
		RED	AA		W	
		GRN	Y		X	
		BLK	C		Y	
		YEL	E		Z	
		BLK	*		AA	
4	22	GRN	P1-p	2	BB	6

TWP

TWP

NOTES:

1. ITEMS NO 2 & 6 TO BE CRIMPED TO WIRES BEFORE IT IS INSERTED INTO ITEMS NO 1 & 5.
2. THE FOLLOWING "WINCHESTER ELECTRONICS" CRIMPING TOOLS CAN BE USED.
   A.) CRIMPER # 107-0903-2A
   B.) INSERTION TOOL # 107-1015
   C.) REMOVAL TOOL # 107R-1001
3. AT LEAST ONE TWIST OF EACH PAIR MUST SHOW BEYOND CABLE JACKET.

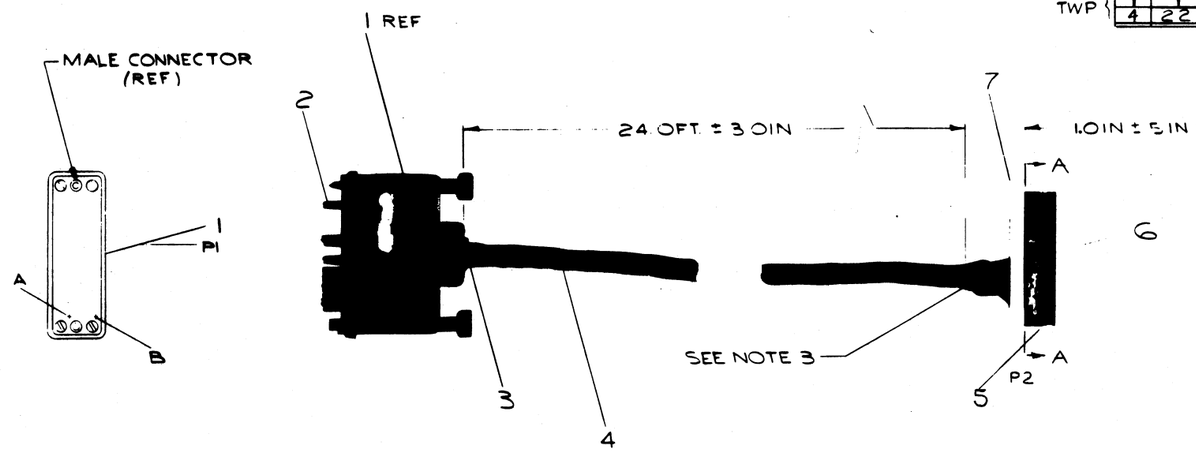

PIN ASSIGNMENTS

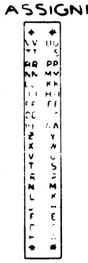

(ASTERISK) INDICATES PIN SLOT NOT USED

VIEW A-A
(BERG 40 CONTACT CONNECTOR)

QTY.	DESCRIPTION	PART NO.	ITEM NO.
1	STRAIN RELIEF BERG	12 11166	7
22	PIN, # 48015 BERG ELECTRONICS	12 10089-4	6
1	HOUSING 40 CONTACT BERG	12 10918-15	5
A/R	CABLE # 1324 ALFA 22 COND.	9107707	4
A/R	TAPE, DOUBLE BACK	9007834	3
22	PIN, CONN NR 100-10 WINCHESTER	1209629	2
1	PLUG # MRACSOPJTCHB WINCHESTER	1209726	1

PARTS LIST

REV	CHANGE NO.	
A	7008837-00001	DIGHROL AMO 3-28-73
B	LP11-00010	L. CONDON 2-26-75

REVISIONS

FIRST USED ON OPTION/MODEL
LP11

DO NOT SCALE DRAWING
UNLESS OTHERWISE SPECIFIED
DIMENSIONS IN INCHES
TOLERANCES
ANGLES ± 0°30'
FINAL SURFACE QUALITY
REMOVE BURRS AND BREAK SHARP EDGES

MATERIAL
SEE PARTS LIST

FINISH

DRN DATE 2-26-73
CHK'D DATE 2-27-73
ENG DATE 3-5-73
MFG DATE 3-5-73
QA DATE 3-5-73

NEXT HIGHER ASSY
LP11

SCALE
SHEET OF

[redacted] EQUIPMENT CORPORATION
WAYLAND, MASSACHUSETTS

TITLE
CABLE DATA
PRODUCTS TO BERG

D TA 7008837-C-C B

39

"THIS DRAWING AND SPECIFICATIONS, HEREIN, ARE THE PROPERTY OF DIGITAL EQUIPMENT CORPORATION AND SHALL NOT BE REPRODUCED OR COPIED OR USED IN WHOLE OR IN PART AS THE BASIS FOR THE MANUFACTURE OR SALE OF ITEMS WITHOUT WRITTEN PERMISSION. COPYRIGHT © , DIGITAL EQUIPMENT CORPORATION"

WIRE TABLE

ITEM NO	DESCRIPTION AWG	DESCRIPTION COLOR	FROM CONNECTION	FROM TERM	TO CONNECTION	TO TERM	SIGNAL NAME
4	24	BLU	P1 - B	2	P2 - JJ	6	D1
	TWP	YEL	P1 - F		P2 - LL		D2
		ORN	P1 - L		P2 - BB		D3
		RED	P1 - R		P2 - FF		D4
		ORN	P1 - V		P2 - TT		D5
		YEL	P1 - Z		P2 - RR		D6
		GRN	P1 - n		P2 - DD		D7
		YEL	P1 - p		P2 - D		D8(VFU)
		BLU	P1 - D		P2 - HH		RTN
		WHT	P1 - J		P2 - KK		RTN
		GRN	P1 - N		P2 - AA		RTN
		WHT	P1 - T		P2 - EE		RTN
		BRN	P1 - X		P2 - SS		RTN
		WHT	P1 - b		P2 - PP		RTN
		BLU	P1 - K		P2 - CC		RTN
		RED	P1 - s		P2 - C		RTN
		BLU	P1 - E		P2 - X		DEMAND
		BLK	P1 - C		P2 - W		RTN
		ORN	P1 - J		P2 - VV		STROBE
		BLK	P1 - m		P2 - UU		RTN
		GRN	P1 - y		P2 - R		FAULT
		BLK	P1 - AA		P2 - P		RTN
		GRY	P1 - EE		P2 - V		PAPER
		RED	P1 - Y		P2 - U		RTN
		BRN	P1 - a		P2 - J		NOTE #4
		RED	P1 - c		P2 - H		
		GRN	P1 - f		P2 - L		
		RED	P1 - h		P2 - K		
		ORN	P1 - r		P2 - F		
		WHT	P1 - t		P2 - E		
		BRN	P1 - u		P2 - T		
		BLK	P1 - w		P2 - S		
		GRY	P1 - z		P2 - Z		
		WHT	P1 - BB		P2 - Y		
	24	GRY	P1 - DD		P2 - B		
4	TWP	BLK	P1 - FF	2	P2 - A	6	NOTE #4

LEGEND

NUMBER	DIM "X" VARIATION	DIM "Y" PRECUT
7011212-25	25 FT ± 3 IN	25FT 4IN ± 3IN
7011212-50	50 FT ± 1 FT	50FT 4IN ± 1FT
7011212-AØ	100 FT ± 2 FT	100FT 4IN ± 2 FT

NOTES

1. ITEMS NO #2 & #6 TO BE CRIMPED TO WIRES BEFORE IT IS INSERTED INTO ITEMS NO #1 & #5.
2. THE FOLLOWING WINCHESTER ELECTRONICS CRIMPING TOOLS CAN BE USED.
   A.) CRIMPER #107-0903-2A
   B.) INSERTION TOOL #107-1015
   C.) REMOVAL TOOL #107R-1001
3. AT LEAST ONE TWIST OF EACH PAIR MUST SHOW BEYOND CABLE JACKET.
4. ALL UNUSED WIRES TO BE CUT FLUSH WITH OUTER COVER OF THE CABLE AT BOTH ENDS. THIS INCLUDES ALL CONNECTIONS WITH THE REFERENCE TO NOTE 4.

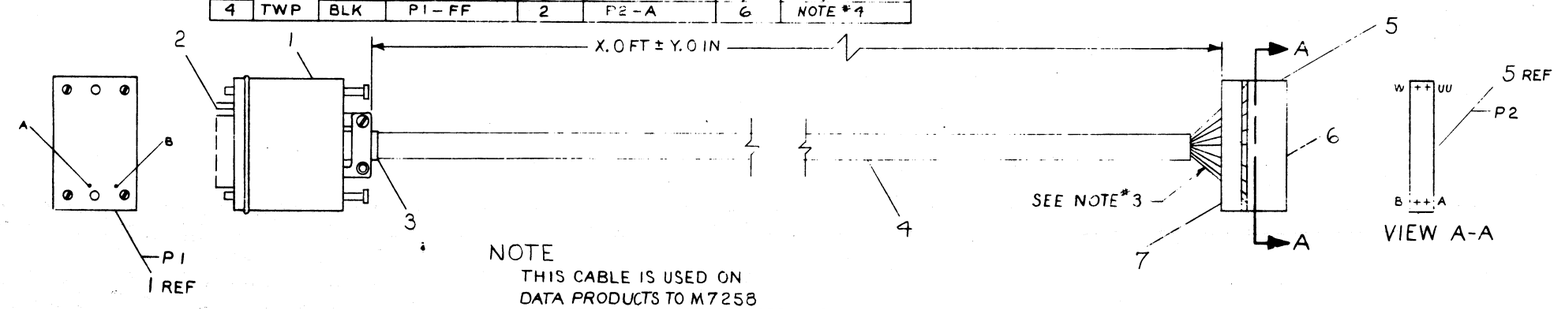

NOTE
THIS CABLE IS USED ON
DATA PRODUCTS TO M7258
DATA PRODUCTS TO M7930 USES 7008837

ITEM NO	DESCRIPTION	DWG./PART NO.	ITEM NO.
1	STRAIN RELIEF	1211166	7
24	SOCKET CRIMP #48015	1210089-4	6
1	CONN 44 PIN	1210918-15	5
A/R	CABLE #24 AWG	9107700	4
A/R	TAPE DOUBLE COATED	9007834	3
24	CONN PIN	1209629	2
1	CONN PLUG	1209726	1

UNLESS OTHERWISE SPECIFIED DIMENSIONS ARE IN INCHES

ANGLES ±0° 30'	CLASS OF ACCURACY (CHECK ONE)	NOMINAL DIMENSIONS RANGE INCHES 0 TO 0.3	0.3 TO 1.2	1.2 TO 4.8	4.8 TO 12.0	12.0 TO 48.0	OVER 48.0 TO 96.0
SURFACE QUALITY IN MICROINCHES	MEDIUM	±.006	±.008	±.012	±.016	±.024	±.06
	PREFERRED	±.012	±.016	±.020	±.06	±.060	±0.1

QUANTITY & VARIATION

THIRD ANGLE PROJECTION

REMOVE BURRS AND BREAK SHARP CORNERS

DO NOT SCALE DWG

MATERIAL

FINISH

DRN.		5-3-75
CHK'D		5-8-75
ENG.		5-1-75
PROJ. ENG.		
PROD.		5/19/75
NEXT HIGHER ASSY.	B-DD-[illegible]	
SCALE		
SHEET	OF	

FIRST USED ON 0-00-0

TITLE CABLE LINEPRINTER (M7258)

SIZE	CODE	NUMBER	REV.
D	IA	7011212-0-0	A

DIST.

REVISIONS			
CHK	CHANGE NO.	REV.	
—	LP11-00011	—	ORIGINATED
	LP11-00012	A	

L. CONDON

DEC FORM NO. DIRD 300-C

7011212-0-0 A

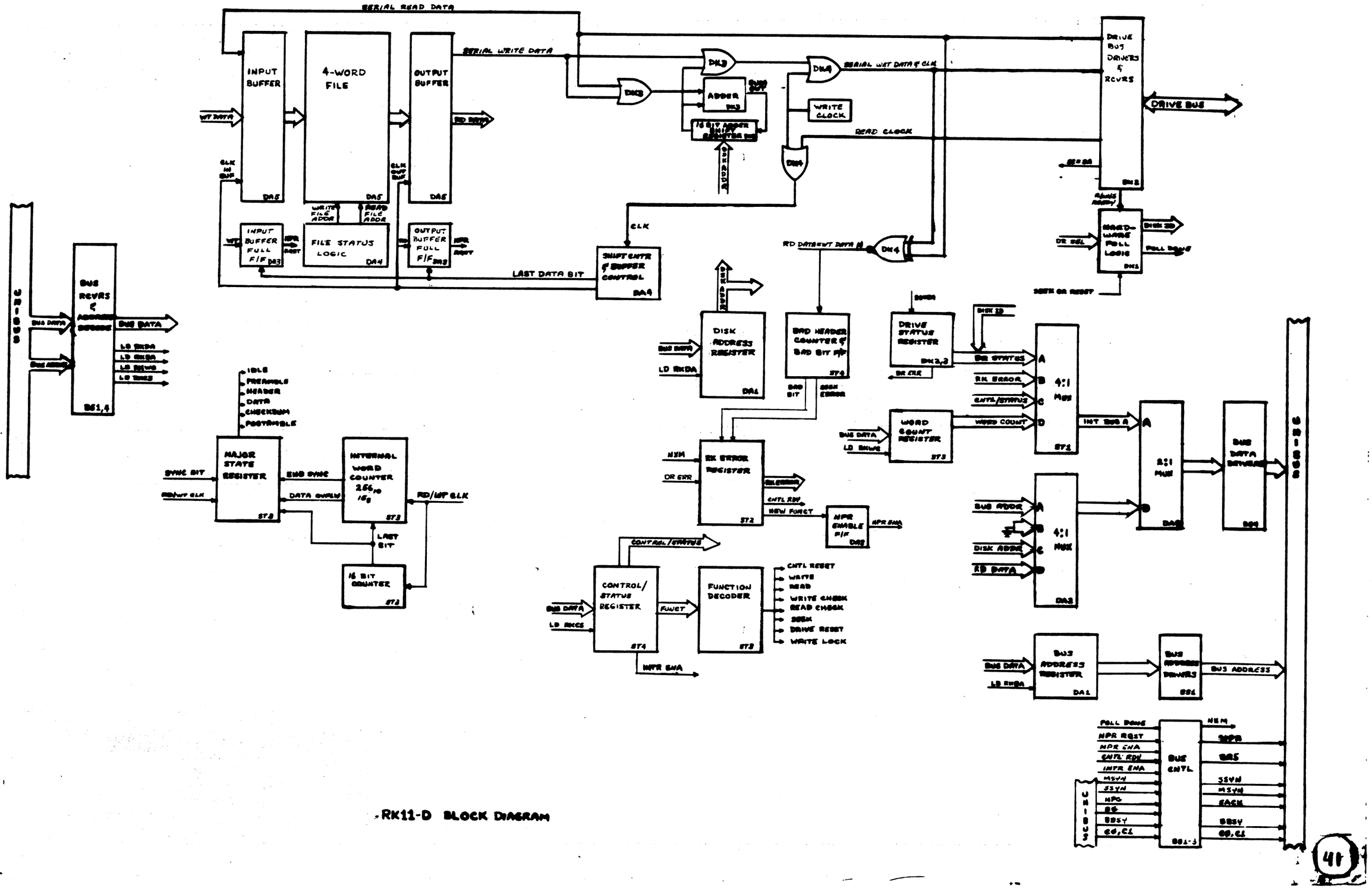

RK11-D BLOCK DIAGRAM

This drawing and specifications, herein, are the property of Digital Equipment Corporation and shall not be reproduced or copied or used in whole or in part as the basis for the manufacture or sale of items without written permission.

NOTE:
FOR PROPER OPERATION OF RK11-D, E THE RK05 DRIVE MUST HAVE AN M7705 REV. J OR LATER AND HAVE A BACK PANEL OF REV. A OR LATER. FOR RK11-E THE RK05 MUST ALSO HAVE A G185 REV. K OR LATER.

	1	2	3	4
	UNIBUS IN M920 INTERNAL CONNECTOR OR BC11-A CABLE	BC11-A DISK CABLE	G772 POWER CONN.	UNIBUS OUT M930 TERMINATOR OR M920 INTERNAL CONNECTOR OR BC11-A CABLE
			W130 K M11-A MAINTENANCE BOARD (OPTIONAL)	
A	M7254	M7255	M7256	M7257
B	STATUS CONTROL	DISK CONTROL	DATA PATHS	BUS CONTROL

FIRST USED ON OPTION/MODEL	RK11-D
DO NOT SCALE DRAWING	
UNLESS OTHERWISE SPECIFIED	
DIMENSION IN INCHES	
TOLERANCES	
DECIMALS ± .005	FRACTIONS ± 1/64
ANGLES ± 0°30'	
FINAL SURFACE QUALITY	
REMOVE BURRS AND BREAK SHARP CORNERS	
MATERIAL	
FINISH	
DRN.	DATE 7/25/72
CHK.	DATE [redacted]
ENG.	DATE 11/1/72
PROJ. ENG.	DATE 11/1/72
PROD.	DATE 11/15/72
NEXT HIGHER ASSY	R-D-RK11-E
SCALE	NONE
SHEET 1 OF 1	

QTY.	DESCRIPTION	PART NO	ITEM NO
PARTS LIST			

[redacted] EQUIPMENT CORPORATION
MAYNARD, MASSACHUSETTS

TITLE
MODULE UTILIZATION

SIZE	CODE	NUMBER	REV
D	MU	RK11-D-1	

DIST.

SIZE	CODE	NUMBER	REV
D	M	RK11-D-1	

REVISIONS
REV. | CHANGE NO. | CHK.

DEC FORM NO DRD 100

COPYRIGHT © 1973
DIGITAL EQUIPMENT CORPORATION

CSM7254-D-1

NOTES:

* IF NECESSARY USE I.C DEC 8875 P/N 1910647

** IC DEC 384 P/N 1909486 OR 5384 P/N 1910394 MAY BE SUBSTITUTED FOR 7384 IN E26. E1 MUST BE A 7384

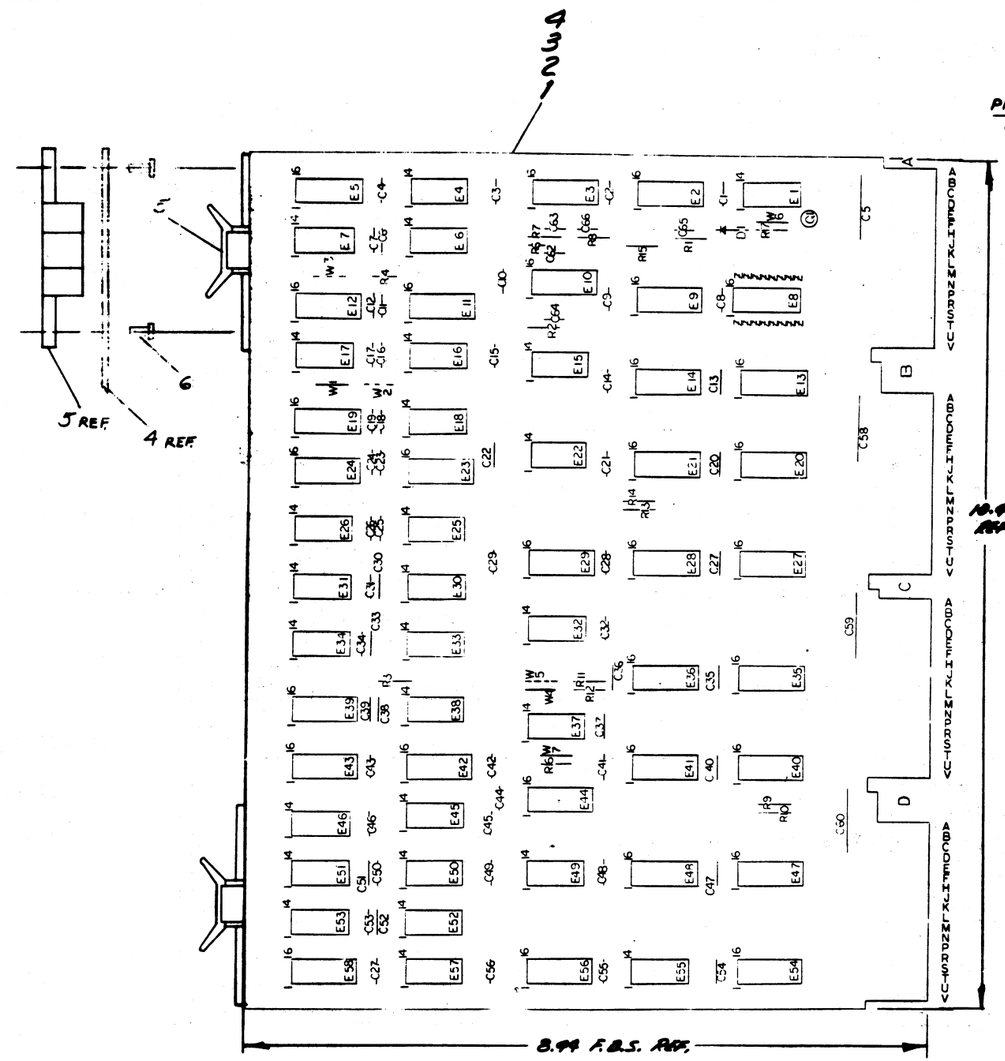

PIN NOMENCLATURE
MODULE RK11-D

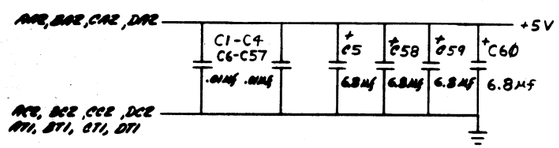

I.C. DEC 74175	8	16
I.C. DEC 74161	8	16
I.C. DEC 7384	1	8
I.C. DEC 4015	8	16
I.C. DEC 7496	12	5
I.C. DEC 74175	8	16
I.C. DEC 74175	8	16
I.C. DEC 74175	8	16
I.C. DEC 7425	12	5
I.C. DEC 7442	8	16
IC TYPE	GND	+ 5V

GND AND 5V ARE USUALLY PIN 7 AND 14 RESPECTIVELY EXCEPTIONS ARE STATED ABOVE

IC PIN LOCATIONS

QTY	REF DESIGNATION	DESCRIPTION	PART NO	ITEM NO
1	Q1	TRANSISTOR DEC 6534B	1503409-01	50
1	E8	IC SOCKET	1209838	49
4	W1,W4,W6,W7	INSULATED JUMPER 6-2007-1	9009185	48
1	E39	I.C. DEC 74175	1909850	47
2	E23, E41	I.C. DEC 74175	1910051	46
1	E55	I.C. DEC 8815	1909343	45
1	E9	I.C. DEC 74H55	1909063	44
2	E17 E52	I.C. DEC 74H10	1909062	43
1	E38	I.C. DEC 7400	1910455	42
1	E45	I.C. DEC 74H11	1909867	41
5	E21,E27,E28,E29,E40	I.C. DEC 74175	1910018	40
4	E12,E19,E24,E56	I.C. DEC 74161	1910650	39
1	E57	I.C. DEC 74174	1909667	38
3	E6,E7,E37	I.C. DEC 7474	1909897	37
1	E53	I.C. DEC 74H52	1909061	36
2	E15,E22	I.C. DEC 7497	1910091	35
** 2	E1,E26	I.C. DEC 7384	1909855	34
1	E30	I.C. DEC 8881	1909845	33
3	E2,E3,E10	I.C. DEC 74175	1910036	32
3	E9,E43,E44	I.C. DEC 4015	1910087	31
2	E31,E32	I.C. DEC 7420	1909877	30
1	E16	I.C. DEC 7410	1909876	29
3	E18,E34,E49	I.C. DEC 7400	1909838	28
2	E46,E50	I.C. DEC 7402	1909009	27
8	[illegible]	I.C. DEC 74153	1909827	26
1	E11	I.C. DEC 7436	1909833	25
* 1	E25	I.C. DEC 7451	1909878	24
2	E51,E33	I.C. DEC 7400	1909836	23
1	E43	I.C. DEC 7402	1910096	22
3	R10,R12,R14	RES. 750 Ω 1/4 W 5%	1901401	21
3	R9,R11,R13	RES. 330 Ω 1/4 W 5%	1900295	20
3	R3,R15,R16	RES. 1K 1/4 W 5%	1909865	19
1	R1	RES. 47K 1/4 W 5%	1902177	18
1	R4	RES. 3K 1/4 W 5%	[illegible]	17
4	R2,R6,R7,R8	RES. 10K 1/4 W 5%	[illegible]	16
1	R17	RES. 470 Ω 1/4 W 5%	[illegible]	15
1	D1	DIODE IN748A 3.9V	1900122	14
2	C62,C63	CAP. 47 µf 100V 5% D.M.	1000011	13
1	C65	CAP. 330 µf 100V 5% D.M.	1001630	12
1	C64	CAP. 33 µf 100V 5% D.M.	1000012	11
1	C66	CAP. 120 µf 100V 5% D.M.	1000018	10
56	C1-C4, C6-C57	CAP. .01 µf 100V 10% AXIAL	1001610	9
4	C5,C58,C59,C60	CAP. 6.8 µf 35V, 10% TANT	1005006	8
8		SPACER (7-7) STANDOFF	[illegible]	6
4		HANDLE (PLUG-CLIP) MAGNETIC	[illegible]	5
1		ETCHED CIRCUIT BOARD	5009088	4
REF		MODULE RED INSTRUCT	[illegible]	3
REF		ASSEMBLING HOLE LAYOUT	[illegible]	2
REF		X-Y COORDINATE TABLE LOCATION	[illegible]	1

PARTS LIST

ETCH BOARD REV E

FIRST USED ON OPTION MODEL RK11-D

DEC NO.	EIA NO.	DEC NO.	EIA NO
		DEC 6534B	NONE
		IN748A	IN748A

SEMICONDUCTOR CONVERSION CHART

ORIGINATED		E
CHANGE NO.		REV
CHK		REVISIONS

DRN R. Radebaugh DATE 4-5-73
CHK R. Ferris DATE 4-29-73
LDR DATE 5/7/73
PROJ DATE 5/8/73
PROG R. Radeberg DATE 5/29/73

NEXT HIGHER ASSY B-DD-RK11-D
SCALE NONE
SHEET 2 OF

[redacted] EQUIPMENT CORPORATION
MAYNARD MASSACHUSETTS

TITLE STATUS CONTROL RK11-D

SIZE D CODE CS NUMBER M7254 - [illegible] REV H

DIST

DEC FORM NO DNS-128A

This drawing and specifications, herein, are the property of Digital Equipment Corporation and shall not be reproduced or copied or used in whole or in part as the basis for the manufacture or sale of items without written permission. COPYRIGHT © 1973
DIGITAL EQUIPMENT CORPORATION

4:1 MULTIPLEXER

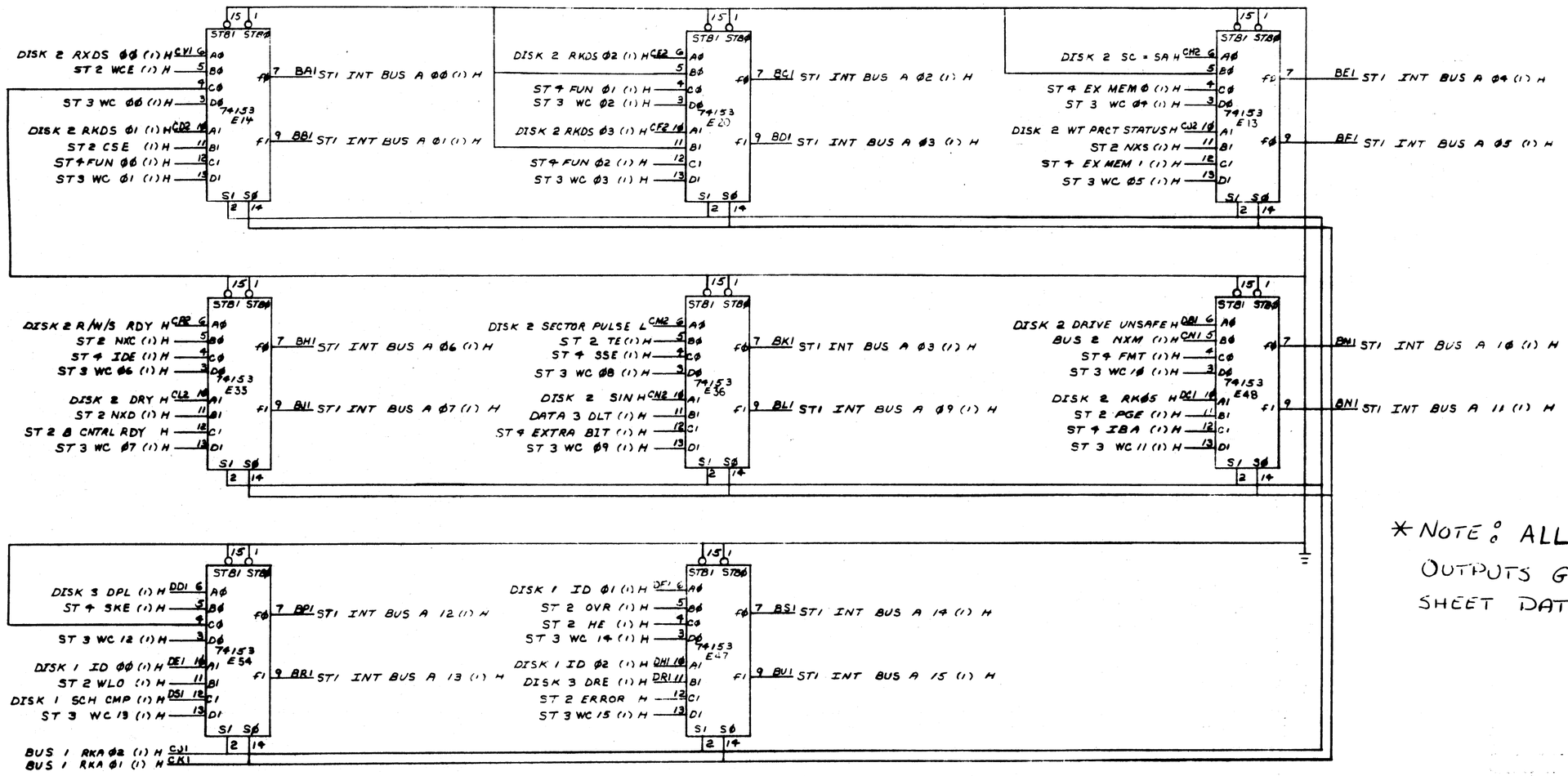

* NOTE: ALL OUTPUTS GO TO SHEET DATA 2

NOTES:
1. CUT W3 FOR 16 BIT OPERATION (RK11-C)
2. CUT W1 FOR 18 BIT OPERATION (RK11-B)
   CUT W2 FOR 16 BIT OPERATION (RK11-D)
3. CUT W5 FOR NORMAL OPERATION (CHECKS HEADER 16 TIMES BEFORE FLAGGING SEEK ERROR)
   CUT W4 FOR RK11-C COMPATABILITY (CHECKS HEADER ONCE)

FIRST USED ON OPTION/MODEL	QTY	DESCRIPTION	PART NO.	ITEM NO.
RK11-D		PARTS LIST		

UNLESS OTHERWISE SPECIFIED DIMENSION IN INCHES. TOLERANCES
DECIMALS: XXX = .005, XX = .02, X = .1 — ANGLES: ±0° 30'
REMOVE BURRS AND BREAK SHARP CORNERS SURFACE QUALITY ✓
MATERIAL
FINISH

DRN. [redacted] DATE 4-4-73
CHK. [redacted] DATE 5-22-73
ENG. [redacted] DATE
PROJ. ENG. [redacted] DATE
APPD. [redacted] DATE 6/25/73

[redacted] EQUIPMENT CORPORATION

TITLE: STATUS CONTROL (ST 1)

NEXT HIGHER ASSY: B-DD-RK11-D
SCALE: NONE
SHEET 3 OF

SIZE D | CODE CS | NUMBER M7254-Ø-1 | REV. C
DIST

DEC FORM NO DRD 103-B

44

This drawing and specifications, herein, are the property of Digital Equipment Corporation and shall not be reproduced or copied or used in whole or in part as the basis for the manufacture or sale of items without written permission. COPYRIGHT © 1973
DIGITAL EQUIPMENT CORPORATION

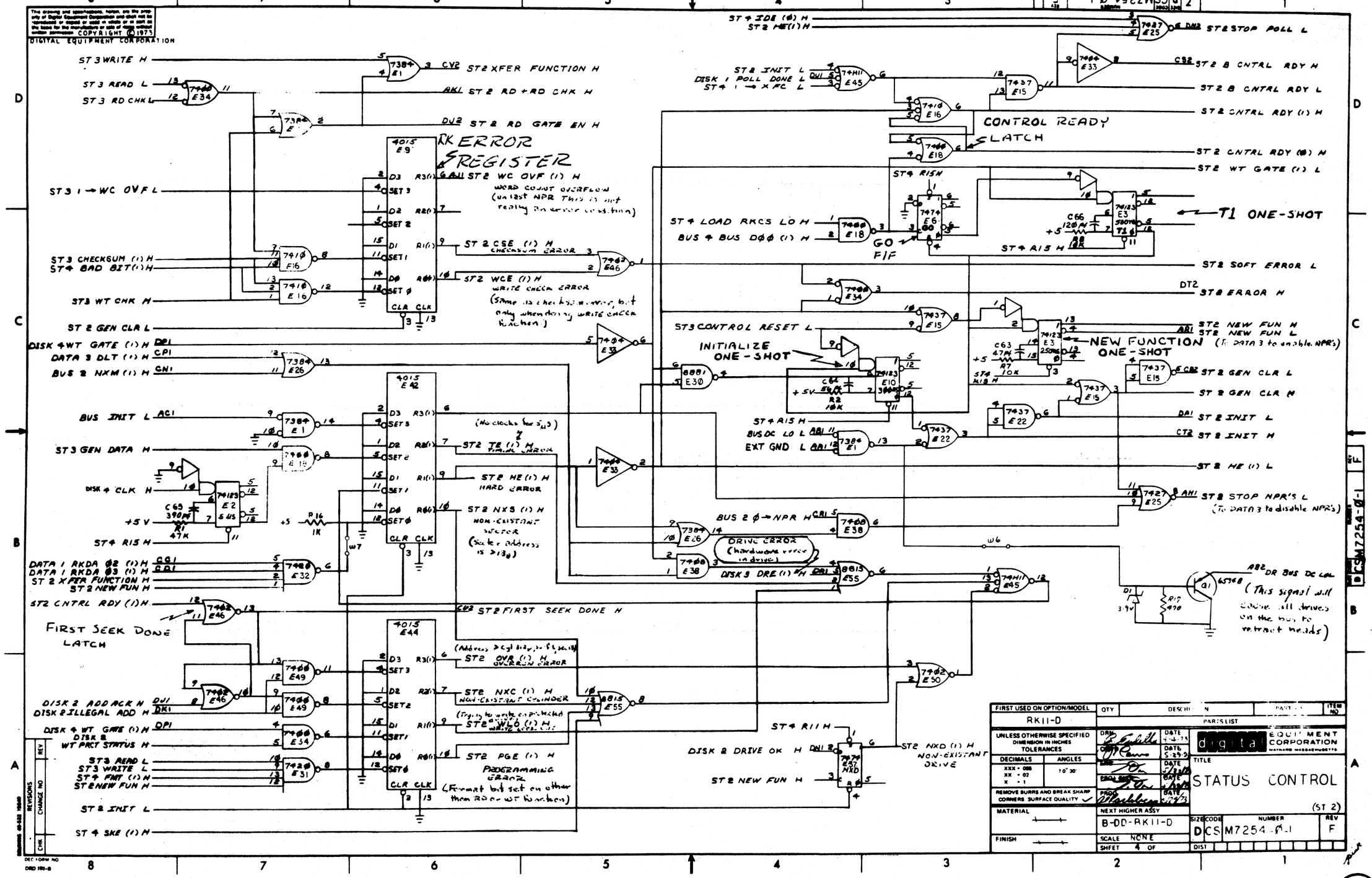

This drawing and specifications, herein, are the property of Digital Equipment Corporation and shall not be reproduced or copied or used in whole or in part as the basis for the manufacture or sale of items without written permission. COPYRIGHT © DIGITAL EQUIPMENT CORPORATION

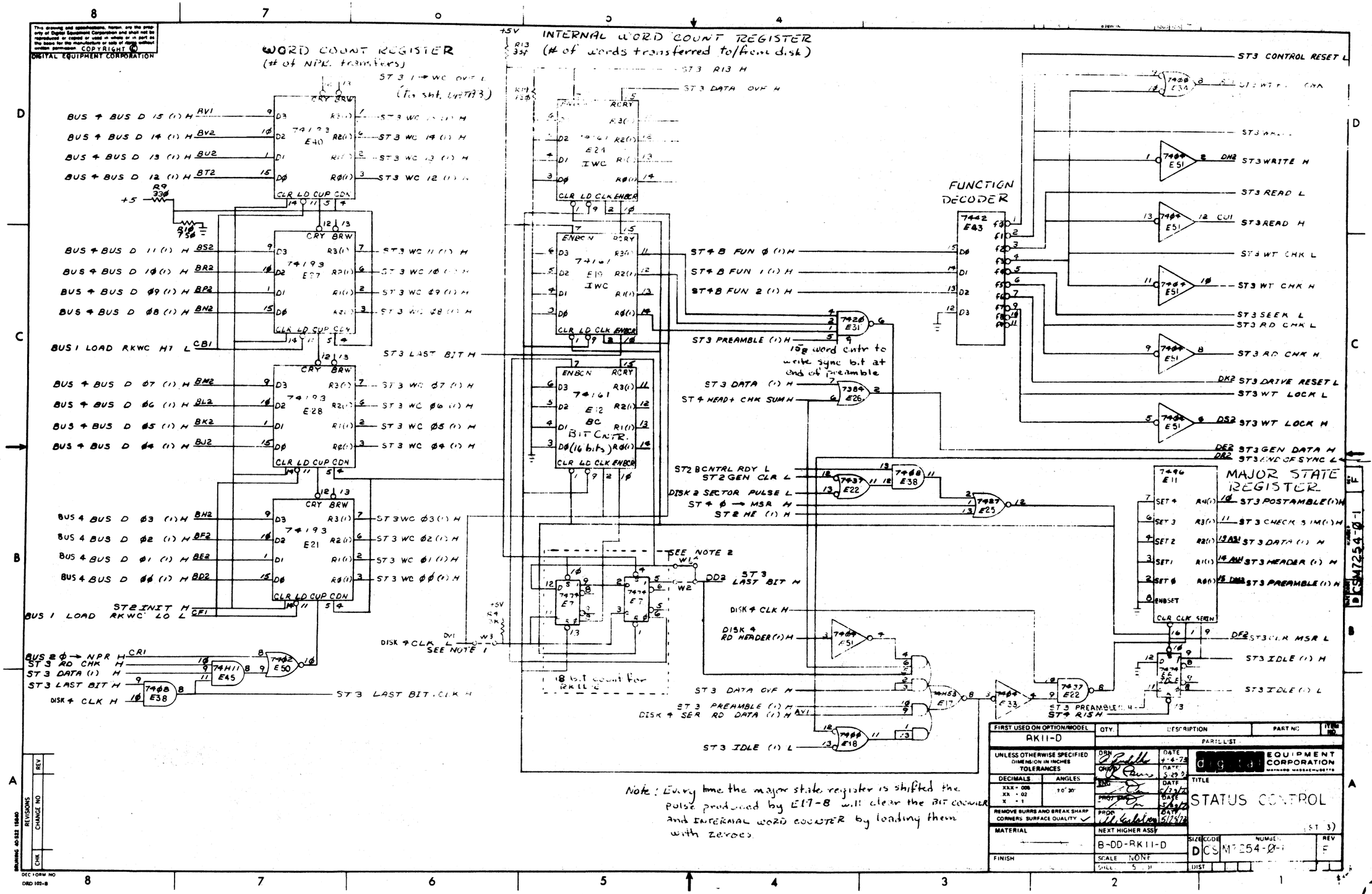

(46)

COPYRIGHT © 1973
DIGITAL EQUIPMENT CORPORATION

CONTROL / STATUS REGISTER

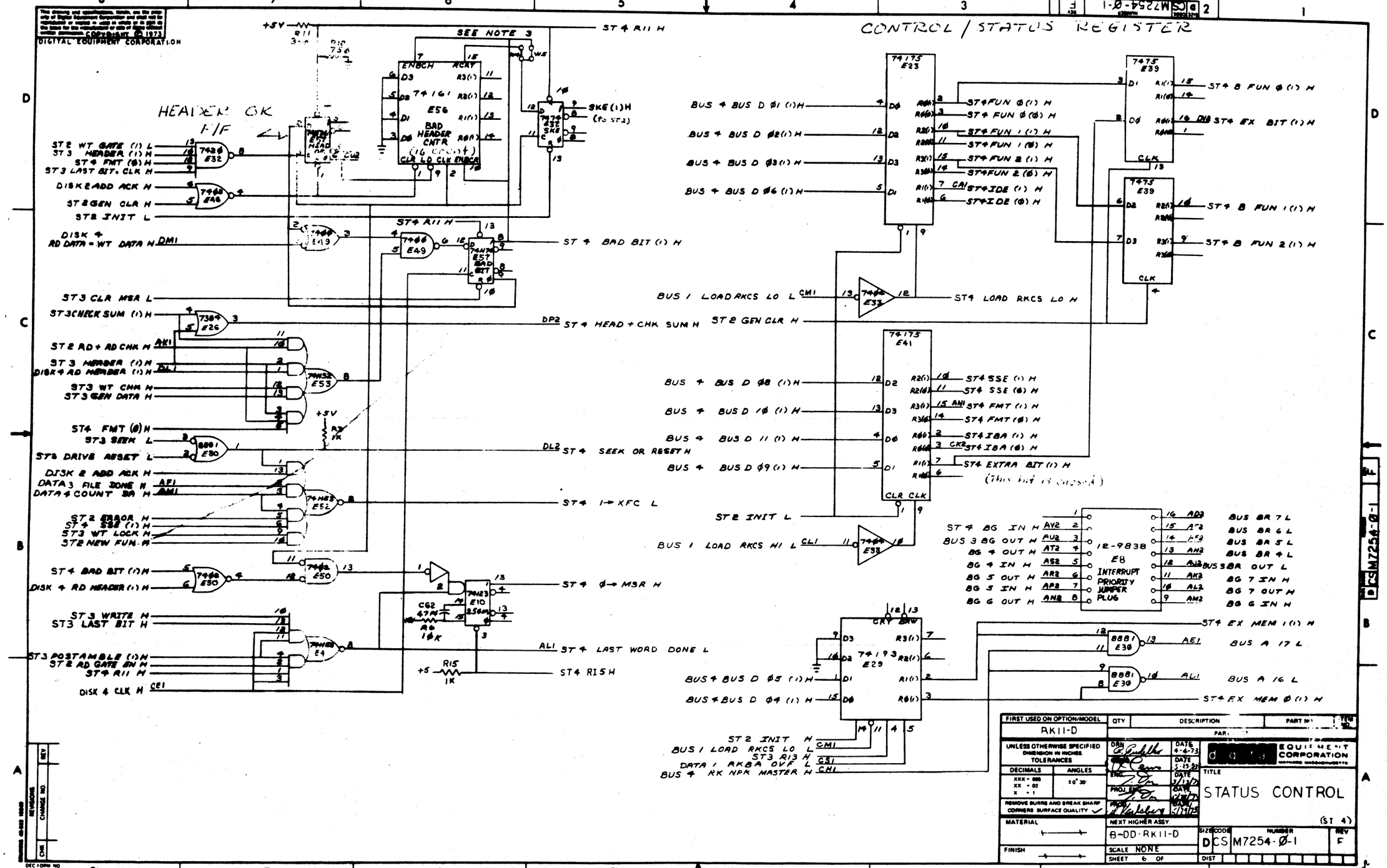

FIRST USED ON OPTION/MODEL	QTY	DESCRIPTION	PART NO	REV
RK11-D				

UNLESS OTHERWISE SPECIFIED DIMENSION IN INCHES. TOLERANCES
DECIMALS: XXX ± .005, XX ± .02, X ± .1
ANGLES: ±0° 30'
REMOVE BURRS AND BREAK SHARP CORNERS SURFACE QUALITY ✓

MATERIAL
FINISH

DRN: G. Gudeller DATE 4-4-73
ENG: DATE 5-29-73
PROJ ENGR: DATE 7/13/73
PROD: DATE 7/17/73

EQUIPMENT CORPORATION

TITLE: STATUS CONTROL (ST 4)

NEXT HIGHER ASSY: B-DD-RK11-D
SCALE: NONE
SHEET 6 OF

SIZE D CODE CS NUMBER M7254-Ø-1 REV F
DIST

REVISIONS: REV / CHANGE NO / CHK

DEC FORM NO DRD 110-B

This drawing and specifications, herein, are the property of Digital Equipment Corporation and shall not be reproduced or copied or used in whole or in part as the basis for the manufacture or sale of items without written permission. COPYRIGHT ©
DIGITAL EQUIPMENT CORPORATION

NOTES:

1.) IF 8640'S (ITEM #33) ARE NOT AVAILABLE, USE 11380'S PART NO. 19-11113

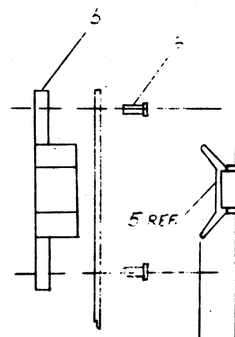

NOTES

1.) INSTALL W1 FOR RK05.
2.) CUT W4 FOR RK11-C COMPATIBILITY (NORMAL OPERATION)
3.) FOR RK11-D (RK05) CUT JUMPER W3 FOR RK11-E (18 BIT RK05) CUT JUMPER W2.
4.) FOR NORMAL OPERATION INSTALL W6 (CHANGES ID BITS ONLY FOR SEARCH COMPLETE INTERRUPT). INSTALL W5 TO CHANGE ID BITS FOR ANY INTERRUPT.
5.) INSTALL PROPER CRYSTAL IN SPLIT LUGS AS OUTLINED IN TABLE I.

TABLE I

	DISK	BITS/WORD	MHZ	DEC P/N
RK11-D	RK05	16	2.880	18-10694-3
RK11-E	RK05	18	3.090	18-10694-4

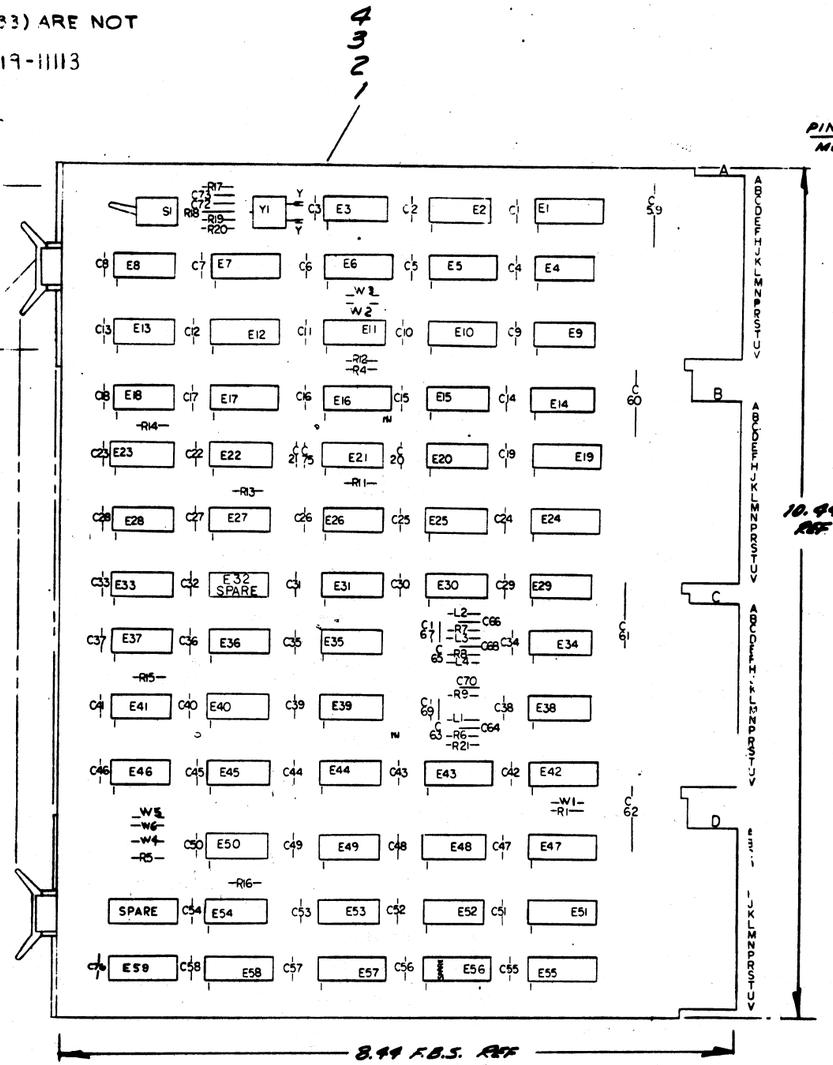

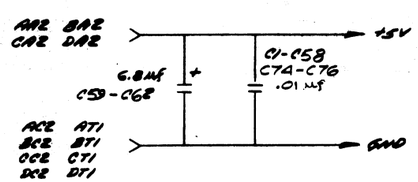

I.C. DEC 8640	1	8
I.C. DEC 7380	1	8
I.C. DEC 74193	8	16
I.C. DEC 74175	8	16
I.C. DEC 74161	8	16
I.C. DEC 74151	8	16
I.C. DEC 74157	8	16
I.C. DEC 7496	5	12
I.C. DEC 314	1	8
I.C. DEC 7482	11	4
I.C. DEC 74174	8	16
I.C. DEC 7476	5	13
I.C. DEC 7442	8	16
I.C. DEC 74123	8	16
IC TYPE	GND	+ 5V

GND AND 5V ARE USUALLY PIN 7 AND 14 RESPECTIVELY EXCEPTIONS ARE STATED ABOVE

IC PIN LOCATIONS

QTY	REF DESIGNATION	DESCRIPTION		ITEM
3	W1, W2, W6	INSULATED JUMPER #20	9009185	53
2		SPLIT LUGS	9006738	52
2		SWAGE LUGS	9007791	51
1	S1	SWITCH TOGGLE SPDT	1810209	50
4	L1-L4	INDUCTOR, 100UH, 165MA 10%	1610662	49
1	Y1	CRYSTAL (SEE TABLE I)		48
10	E11, E16, E22, E27, E44, E48, E49, E52-E54	I.C. DEC 7474	1905547	47
1	E50	I.C. DEC 74H04	1909931	46
2	E13, E46	I.C. DEC 7408	1910185	45
1	E59	I.C. DEC 314	1909704	44
1	E55	I.C. DEC 74161	1910680	43
1	E31	I.C. DEC 8815	1903718	42
1	E43	I.C. DEC 7442	1910896	41
1	E7	I.C. DEC 7476	1905585	40
1	E6	I.C. DEC 74174	1910682	39
1	E28	I.C. DEC 7482	1905584	38
1	E18	I.C. DEC 74N21	1909058	37
1	E36	I.C. DEC 74N30	1909060	36
1	E37	I.C. DEC 7430	1905580	35
1	E34	I.C. DEC 8242	1908348	34
6	E20, E21, E25, E29, E30, E38	I.C. DEC 8640	1911469	33
2	E12, E17	I.C. DEC 74138	1910018	32
2	E42, E47	I.C. DEC 74157	1910655	31
1	E57	I.C. DEC 74151	1909386	30
2	E51, E58	I.C. DEC 74175	1910681	29
1	E3	I.C. DEC 7380	1910390	28
5	E2, E4, E9, E14, E15	I.C. DEC 8881	1909706	27
				26
1	E35	I.C. DEC. 7420	1905577	25
3	E23, E39, E45	I.C. DEC 7410	1905576	24
3	E8, E40, E44	I.C. DEC 7400	1905575	23
2	E5, E10	I.C. DEC 7496	1910363	22
2	E26, E33	I.C. DEC 7404	1909686	21
7	R1, R4, R12, R13, R15, R16, R20	RES. 1K 1/4W 5%	1300165	20
1	R5	RES. 3K 1/4W 5%	1300375	19
4	R6-R9	RES. 910Ω 1/4W 5%	1302914	18
2	R17, R18	RES. 10K 1/4W 5%	1300479	17
				16
2	R11, R14	RES. [illegible] 1/4W [illegible]	1300[illegible]9	15
2	R19, R20	RES. [illegible] 1/4W 5%	1300[illegible]	14
3	E1, E19, E24	RES, FRICK	131100	13
2	C72, C73	CAP. DOSAP 100V 20%	1001765	12
4	C63, C65, C67, C69	CAP. 270 PF 100V 5% DM	1000822	11
4	C64, C66, C68, C70	CAP. 39 PF 100V 5% DM	1000010	10
60	C1-C58, C75, C76	CAP. .01uf 100V 20% AXIAL	1001610	9
4	C59-C62	CAP. 6.8uf 35V 10% TANT	1003906	8
				7
8		EYELET (G.S.-8-7) TINNERMAN	9006732	6
9		HANDLE FLO-CHAP [illegible]	SYK 8337-06	5
1		ETCHED CIRCUIT BOARD	5009986	4
REF		MAGNET REC HISTORY	D-MM-M7255-0-6	3
REF		ASSY/DRILLING HOLE LAYOUT	D-MM-M7255-0-5	2
REF		X-Y COORDINATE [illegible] LOCATION	RCO M7255-0-4	1

PARTS LIST

FIRST USED ON OPTION MODEL: RK11-D

ETCH BOARD REV: F

REV	CHANGE NO.	DEC NO.	EIA NO.	DEC NO.	EIA NO.

REVISIONS

SEMICONDUCTOR CONVERSION CHART

DRN [illegible] DATE [illegible]
CHK [illegible] DATE [illegible]
ENG [illegible] DATE [illegible]
PROJ ENG [illegible] DATE [illegible]
PROD [illegible] DATE [illegible]

NEXT HIGHER ASSY: B-DD-RK11-D

SCALE: NONE

SHEET 2 OF

DIGITAL EQUIPMENT CORPORATION
MAYNARD MASSACHUSETTS

TITLE: DISK CONTROL RK11-D

SIZE D | CODE CS | NUMBER M7255-0-1 | REV. H

DIST

DEC FORM NO. DRD-195A

BRUNING 40-522 16699

48

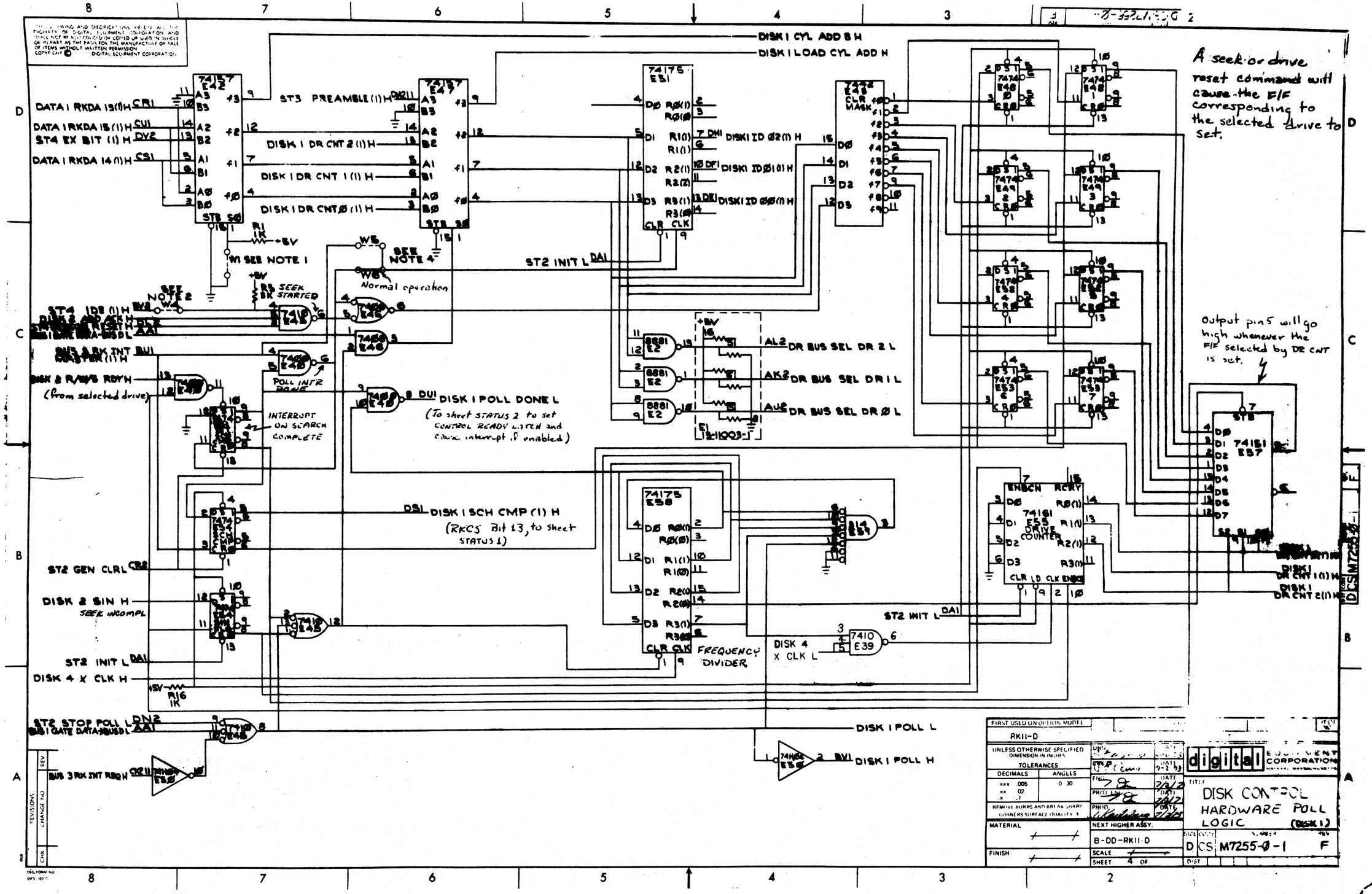
DISK 1 CYL ADD 8 H
DISK 1 LOAD CYL ADD H
A seek or drive reset command will cause the F/F corresponding to the selected drive to set.
Output pin 5 will go high whenever the F/F selected by DR CNT is set.
DATA 1 RKDA 15(1) H
ST4 EX BIT (1) H
DATA 1 RKDA 14(1) H
ST3 PREAMBLE (1) H
DISK 1 DR CNT 2 (1) H
DISK 1 DR CNT 1 (1) H
DISK 1 DR CNT Ø (1) H
DISK 1 ID Ø2 (1) H
DISK 1 ID Ø1 (1) H
DISK 1 ID ØØ (1) H
ST2 INIT L
SEE NOTE 1
SEE NOTE 2
SEE NOTE 4
SEEK STARTED
Normal operation
ST4 IDB (1) H
DISK 2 RK INT RDY H
(from selected drive)
POLL INTR DONE
INTERRUPT ON SEARCH COMPLETE
DISK 1 POLL DONE L
(To sheet STATUS 2 to set CONTROL READY LATCH and cause interrupt if enabled)
DR BUS SEL DR 2 L
DR BUS SEL DR 1 L
DR BUS SEL DR Ø L
DISK 1 SCH CMP (1) H
(RKCS Bit 13, to sheet STATUS 1)
ST2 GEN CLR L
DISK 2 SIN H
SEEK INCOMPL
ST2 INIT L
DISK 4 X CLK H
ST2 STOP POLL L
DISK 1 GATE DATA+BUSD L
BUS 3 RK INT RDY H
FREQUENCY DIVIDER
DISK 4 X CLK L
DISK 1 POLL L
DISK 1 POLL H
DRIVE COUNTER
DISK 1 DR CNT 1 (1) H
DISK 1 DR CNT 2 (1) H
FIRST USED ON OPTION MODEL
RK11-D
UNLESS OTHERWISE SPECIFIED DIMENSION IN INCHES
TOLERANCES
DECIMALS
ANGLES
REMOVE BURRS AND BREAK SHARP CORNERS SURFACE QUALITY
MATERIAL
FINISH
NEXT HIGHER ASSY.
B-DD-RK11-D
SCALE
SHEET 4 OF
digital EQUIPMENT CORPORATION
DISK CONTROL HARDWARE POLL LOGIC (DISK 1)
D CS M7255-0-1 F

This drawing and specifications, herein, are the property of Digital Equipment Corporation and shall not be reproduced or copied or used in whole or in part as the basis for the manufacture or sale of items without written permission. COPYRIGHT ©
DIGITAL EQUIPMENT CORPORATION

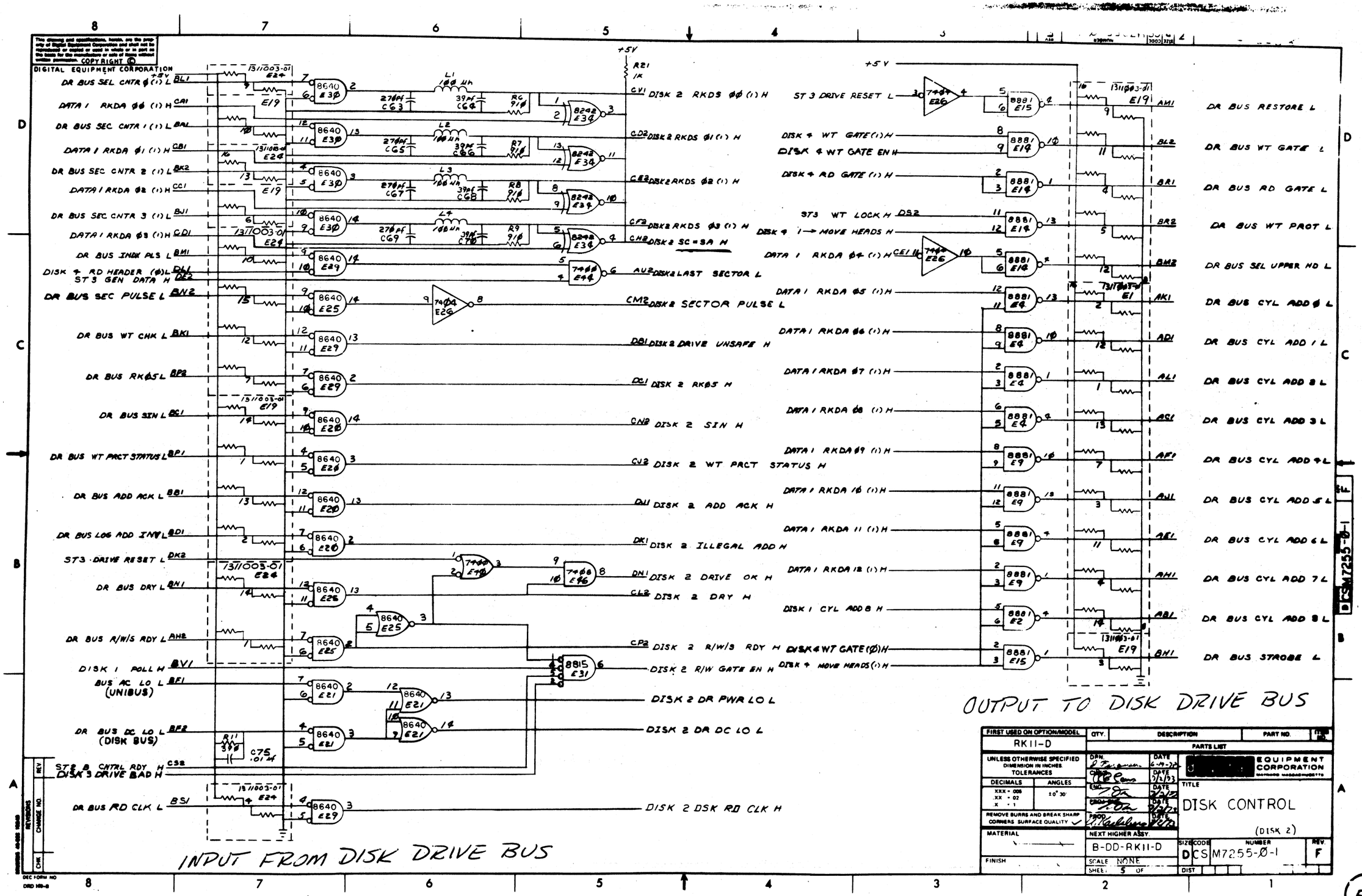

This drawing and specifications, herein, are the property of Digital Equipment Corporation and shall not be reproduced or copied or used in whole or in part as the basis for the manufacture or sale of items without written permission. COPYRIGHT ©

DIGITAL EQUIPMENT CORPORATION

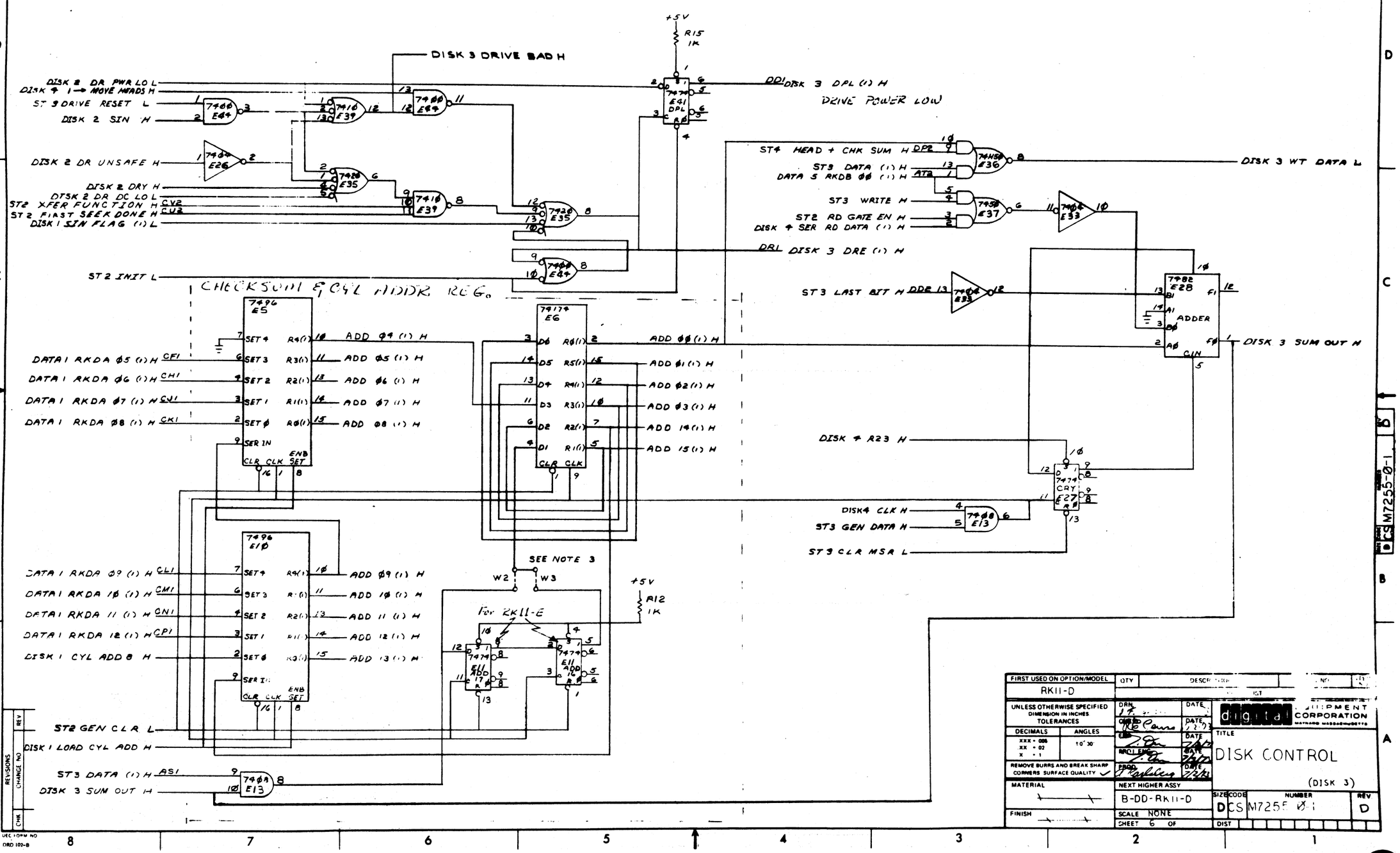

This drawing and specifications, herein, are the property of Digital Equipment Corporation and shall not be reproduced or copied or used in whole or in part as the basis for the manufacture or sale of items without written permission. COPYRIGHT ©
DIGITAL EQUIPMENT CORPORATION

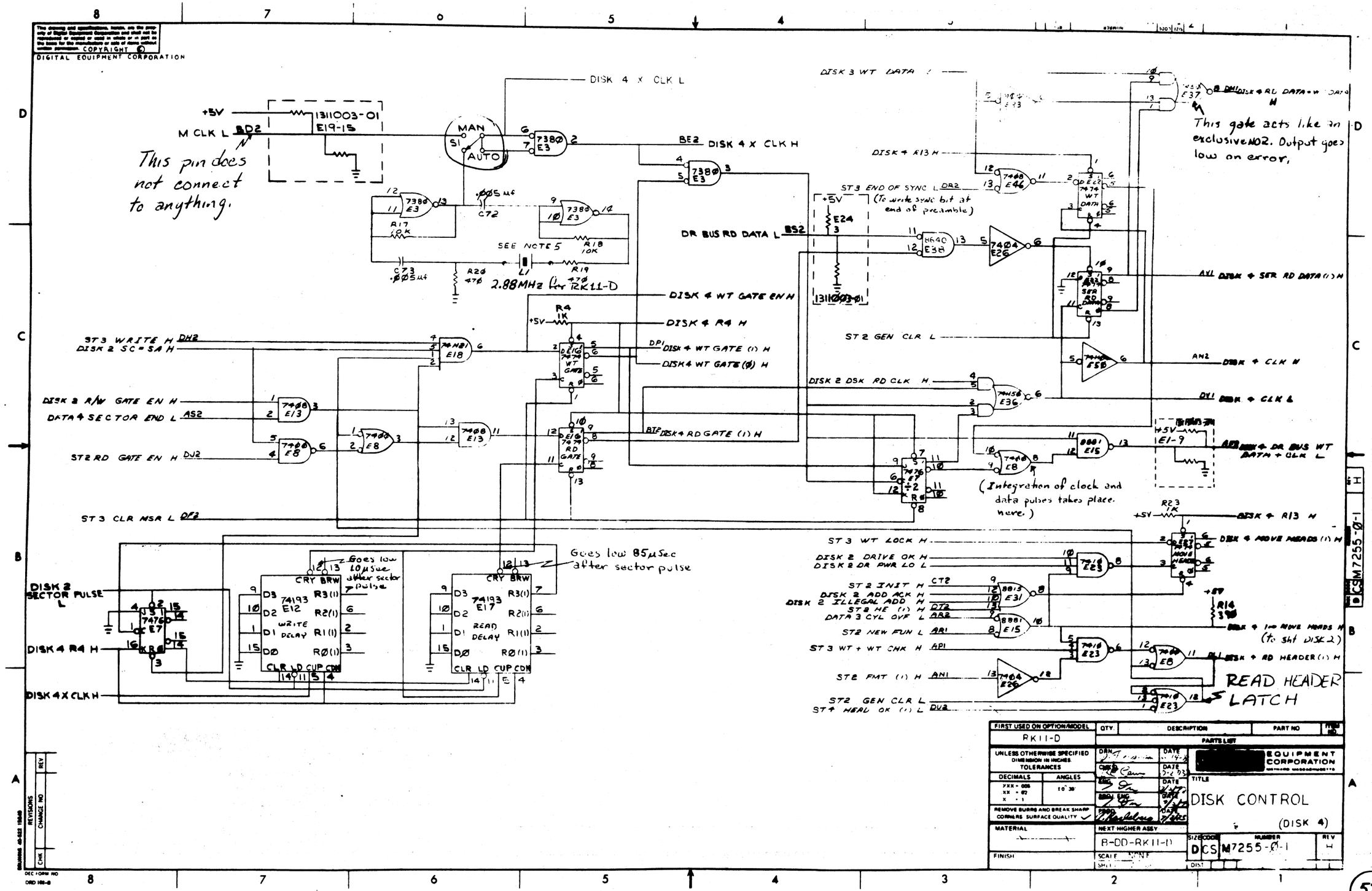

FIRST USED ON OPTION/MODEL	QTY	DESCRIPTION	PART NO	REV NO
RK11-D		PARTS LIST		

UNLESS OTHERWISE SPECIFIED DIMENSION IN INCHES. TOLERANCES
DECIMALS: XXX = .005, XX = .02, X = .1
ANGLES: ±0° 30'
REMOVE BURRS AND BREAK SHARP CORNERS. SURFACE QUALITY ✓
MATERIAL
FINISH
NEXT HIGHER ASSY: B-DD-RK11-D
SCALE NONE
SHT 1

DRN DATE 1-14-70
CHK'D DATE 2-2-73
ENG DATE 1/27/
ENG DATE 7/
PROD DATE 7/25/

[redacted] EQUIPMENT CORPORATION
MAYNARD, MASSACHUSETTS

TITLE: DISK CONTROL (DISK 4)

SIZE D | CODE CS | NUMBER M7255-0-1 | REV H
DIST

REVISIONS: REV | CHANGE NO | CHK

DRAWING 40-522 10849
DEC FORM NO
DRD 101-B

This drawing and specifications, herein, are the property of Digital Equipment Corporation and shall not be reproduced or copied or used in whole or in part as the basis for the manufacture or sale of items without written permission. COPYRIGHT © DIGITAL EQUIPMENT CORPORATION

NOTES:

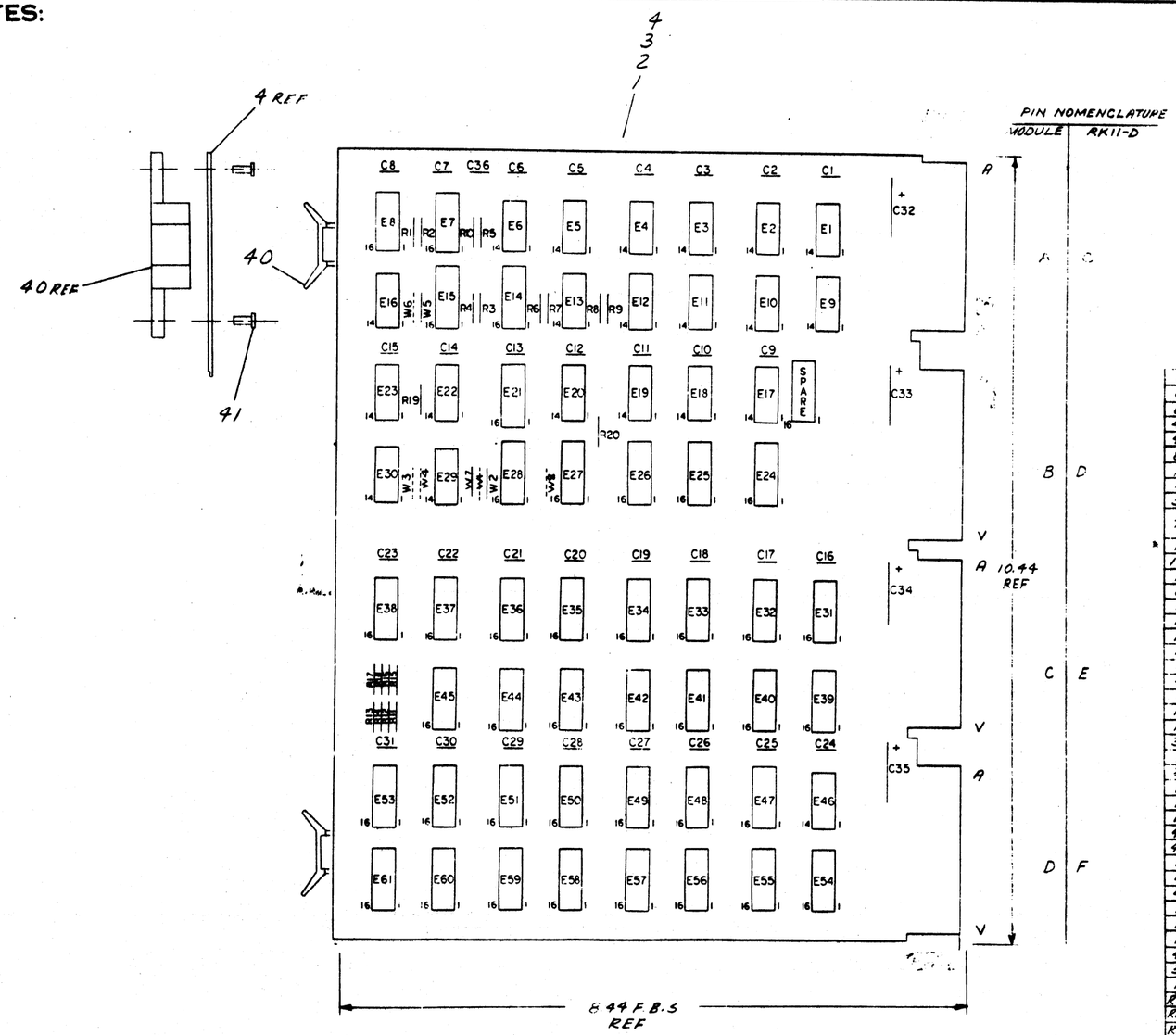

PIN NOMENCLATURE

MODULE	RK11-D
A	A
B	D
C	E
D	F

QTY	REF DESIGNATION	DESCRIPTION	PART NO	ITEM NO
1	R6	5.6K 1/4 W 5% CC	[illegible]	43
3	W2, W5, W7	INSULATED JUMPER L-20	1009185	42
8		EYELET	7000732	41
4		HANDLE, FLIP CHIP MAGENTA	7008337-6	40
4	E52, E53, E60, E61	I.C. DEC 74157	1910655	39
8	E48-E51, E56-E59	I.C. DEC 74153	1909937	38
1	E46	I.C. DEC 8281 DC	1909490	37
1	E38	DIP RESISTOR PACK	1311003-02	36
5	E33-E37	I.C. DEC 74170	1910038	35
7	E31, E32, E39, E40, E47, E54, E55	I.C. DEC 74193	1910018	34
1	E30	I.C. DEC [illegible]	[illegible]	33
10	E24-E28, E41-E45	I.C. DEC 8271	1909615	32
1	E23	I.C. DEC 8881	1909705	31
2	E22, E29	I.C. DEC 7473	1905587	30
1	E21	I.C. DEC 4007	1909867	29
1	E18	I.C. DEC 7442	1909058	28
1	E17	I.C. DEC 7437	1910091	27
1	E13	I.C. DEC 7412	1909355	26
1	E12	I.C. DEC 7400	1905575	25
4	E11, E16, E19, E20	I.C. DEC 7474	1905547	24
1	E10	I.C. DEC 74H10	1909357	23
1	E9	I.C. DEC 74H55	1909063	22
1	E8	I.C. DEC 74161	1910050	21
3	E7, E14, E15	I.C. DEC 74123	1910936	20
1	E5	I.C. DEC 74H74	1909067	19
2	E4, E6	I.C. DEC 74H30	1909060	18
1	E3	I.C. DEC 7402	1909004	17
1	E2	I.C. DEC 74H04	1909931	16
1	E1	I.C. DEC 7408	1910155	15
4	R15-R18	RES. 680Ω 1/4W 5% CC	1301924	14
4	R11-R14	RES 330Ω 1/4W 5% CC	1300295	13
1	R10	RES. 20K 1/4W 5% CC	1302391	12
4	R8, R9, R19, R20	RES. 1K 1/4W 5% CC	1300365	11
4	R3-R5, RT	RES 5.11K 1/4W 1% MF	1300954	10
1	R2	RES. 390Ω 1/4W 5% CC	1300307	9
1	R1	RES. 180Ω 1/4W 5% CC	1300332	8
1	C36	CAP 150PF 100V 5% D.M.	1000019	7
4	C32-C35	CAP 6.8 µF 35V 20% TANT	1000[illegible]	6
31	C1-C31	CAP .01 µF 100V 20% DISC	[illegible]	5
1		LAMINATED CIRCUIT BOARD	[illegible]	4
REF		MODULE ECO HISTORY	B-MN-M7256-0-6	3
REF		ASSY/DRILLING HOLE LAYOUT	D-MN-M7256-0-5	2
REF		X-Y COORDINATE HOLE LOCATION	C-D-M7256-0-4	1

PARTS LIST

ETCH BOARD REV D

FIRST USED ON OPTION MODEL RK11-D

IC TYPE	GND	+5V
DEC 4007	8	16
DEC 7473	11	4
DEC 74170	8	16
DEC 74193	8	16
DEC 74161	8	16
DEC 74157	8	16
DEC 74153	8	16
DEC 8271	8	16
DEC 8640	1	8

GND AND 5V ARE USUALLY PIN 7 AND 14 RESPECTIVELY EXCEPTIONS ARE STATED ABOVE

IC PIN LOCATIONS

AA2, BA2, CA2, DA2 +5V — C1-C31 .01 µF — C32-C35 6.8 µF

AC2 AT1
BC2 BT1
CC2 CT1
DC2 DT1

CHANGE NO	REV

REVISIONS

DEC NO	EIA NO	DEC NO	EIA NO

SEMICONDUCTOR CONVERSION CHART

DRN. DATE 4-20-72
CHK'D. DATE
ENG. DATE
PROJ. ENG. DATE
PROD. DATE

NEXT HIGHER ASSY

digital EQUIPMENT CORPORATION MAYNARD, MASSACHUSETTS

TITLE

SIZE D CODE CS NUMBER M7256 Ø-1 REV. E

SHEET

DRAWING 40-323 16699

DEC FORM NO DRD 135A

53

This drawing and specifications herein are the property of Digital Equipment Corporation and shall not be reproduced or copied or used in whole or in part as the basis for manufacture or sale of items without written permission. COPYRIGHT ©
DIGITAL EQUIPMENT CORPORATION

NOTES:
1. CUT W1 FOR 16 BIT OPERATION (RK11-D)
   CUT W2 FOR 18 BIT OPERATION (RK11-E)
2. CUT W3+W4 FOR 16 BIT OPERATION
3. CUT W5 FOR 18 BIT OPERATION
   CUT W6 FOR 16 BIT OPERATION
4. FOR ETCH REV C & EARLIER
   FOR RK11-E, REMOVE WIRE FROM E28 PIN6 TO E27 PIN10 AND ADD A WIRE FROM E28 PIN6 TO E27 PIN6.
   FOR RK11-D, ADD A WIRE FROM E28 PIN6 TO E27 PIN10 AND CUT ETCH SIDE ONE BETWEEN E28 PIN6 AND E27 PIN6 (REFERENCE ECO# M7256-00003).
   FOR ETCH REV D & LATER
   CUT W7 FOR 18 BIT OPERATION RK11-E
   CUT W8 FOR 16 BIT OPERATION RK11-D

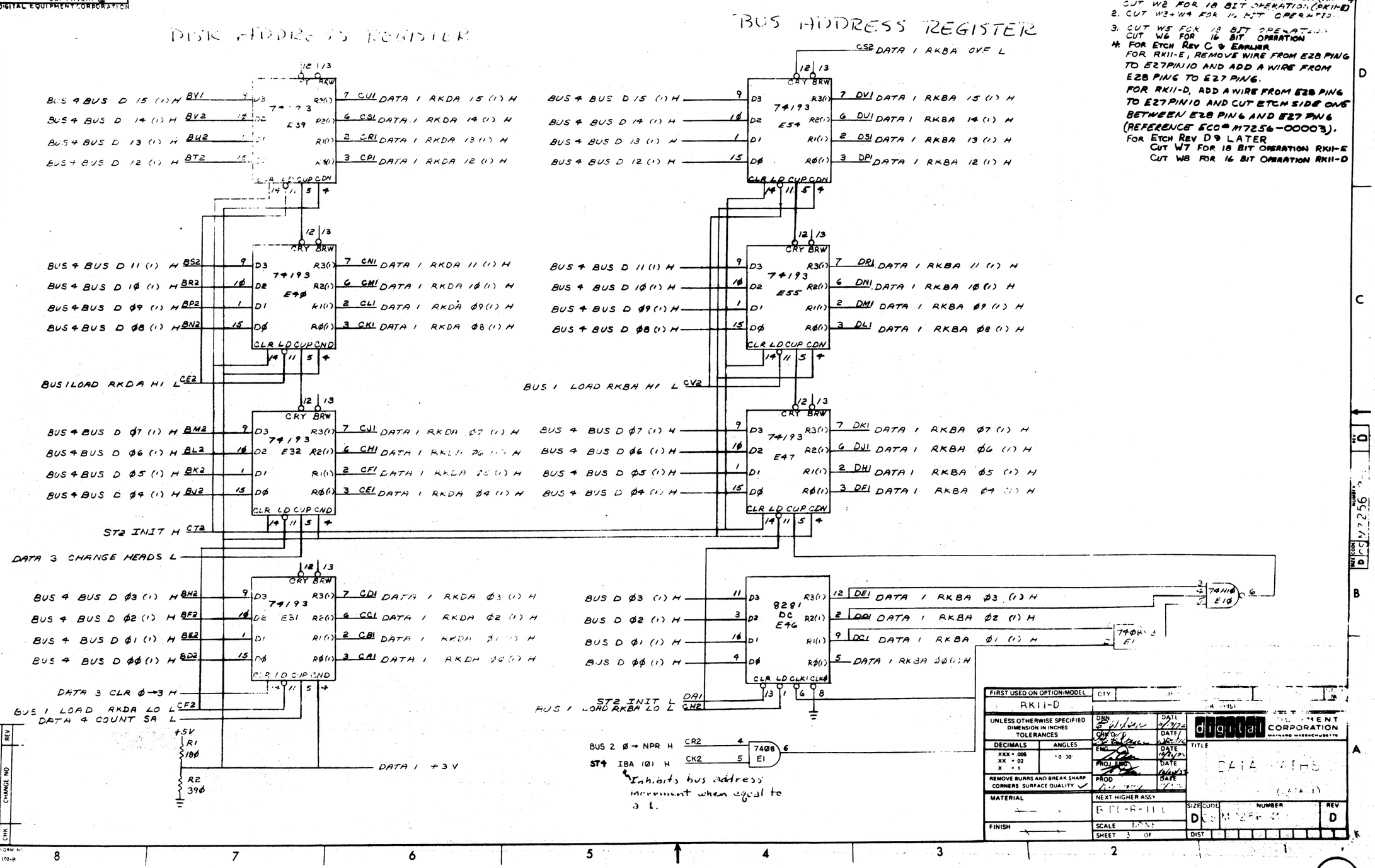

FIRST USED ON OPTION/MODEL	RK11-D
UNLESS OTHERWISE SPECIFIED DIMENSION IN INCHES TOLERANCES	DECIMALS: XXX ± .005, XX ± .02, X ± .1; ANGLES: ±0 30'
REMOVE BURRS AND BREAK SHARP CORNERS SURFACE QUALITY ✓	
MATERIAL	
FINISH	
NEXT HIGHER ASSY	BDC-R-11C
SCALE	NONE
SHEET	3 OF
TITLE	DATA PATHS (RK11)
SIZE	D
CODE	
NUMBER	D CS M7256
REV	D
DIST	

digital DIGITAL EQUIPMENT CORPORATION MAYNARD, MASSACHUSETTS

REVISIONS: REV / CHANGE NO / CHK

DRAWING 40-522 15840

54

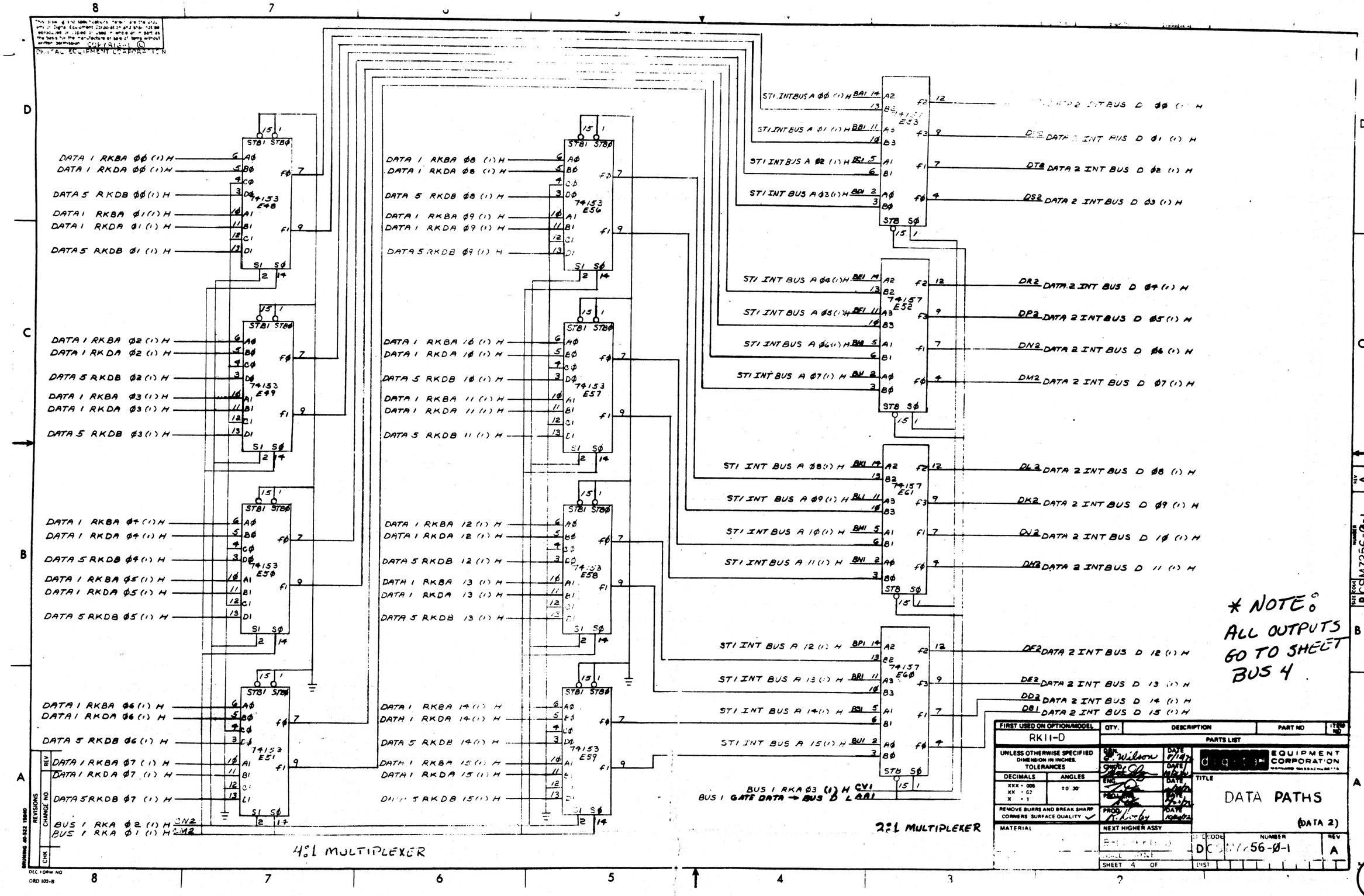
DATA 1 RKBA ØØ (1) H
DATA 1 RKDA ØØ (1) H
DATA 5 RKDB ØØ (1) H
DATA 1 RKBA Ø1 (1) H
DATA 1 RKDA Ø1 (1) H
DATA 5 RKDB Ø1 (1) H
74153 E48
DATA 1 RKBA Ø2 (1) H
DATA 1 RKDA Ø2 (1) H
DATA 5 RKDB Ø2 (1) H
DATA 1 RKBA Ø3 (1) H
DATA 1 RKDA Ø3 (1) H
DATA 5 RKDB Ø3 (1) H
74153 E49
DATA 1 RKBA Ø4 (1) H
DATA 1 RKDA Ø4 (1) H
DATA 5 RKDB Ø4 (1) H
DATA 1 RKBA Ø5 (1) H
DATA 1 RKDA Ø5 (1) H
DATA 5 RKDB Ø5 (1) H
74153 E50
DATA 1 RKBA Ø6 (1) H
DATA 1 RKDA Ø6 (1) H
DATA 5 RKDB Ø6 (1) H
DATA 1 RKBA Ø7 (1) H
DATA 1 RKDA Ø7 (1) H
DATA 5 RKDB Ø7 (1) H
74153 E51
BUS 1 RKA Ø2 (1) H 2N2
BUS 1 RKA Ø1 (1) H 2M2
4:1 MULTIPLEXER
DATA 1 RKBA Ø8 (1) H
DATA 1 RKDA Ø8 (1) H
DATA 5 RKDB Ø8 (1) H
DATA 1 RKBA Ø9 (1) H
DATA 1 RKDA Ø9 (1) H
DATA 5 RKDB Ø9 (1) H
74153 E56
DATA 1 RKBA 1Ø (1) H
DATA 1 RKDA 1Ø (1) H
DATA 5 RKDB 1Ø (1) H
DATA 1 RKBA 11 (1) H
DATA 1 RKDA 11 (1) H
DATA 5 RKDB 11 (1) H
74153 E57
DATA 1 RKBA 12 (1) H
DATA 1 RKDA 12 (1) H
DATA 5 RKDB 12 (1) H
DATA 1 RKBA 13 (1) H
DATA 1 RKDA 13 (1) H
DATA 5 RKDB 13 (1) H
74153 E58
DATA 1 RKBA 14 (1) H
DATA 1 RKDA 14 (1) H
DATA 5 RKDB 14 (1) H
DATA 1 RKBA 15 (1) H
DATA 1 RKDA 15 (1) H
DATA 5 RKDB 15 (1) H
74153 E59
STI INT BUS A ØØ (1) H
STI INT BUS A Ø1 (1) H
STI INT BUS A Ø2 (1) H
STI INT BUS A Ø3 (1) H
74157 E53
DS2 DATA 2 INT BUS D Ø1 (1) H
DT2 DATA 2 INT BUS D Ø2 (1) H
DS2 DATA 2 INT BUS D Ø3 (1) H
STI INT BUS A Ø4 (1) H
STI INT BUS A Ø5 (1) H
STI INT BUS A Ø6 (1) H
STI INT BUS A Ø7 (1) H
74157 E52
DR2 DATA 2 INT BUS D Ø4 (1) H
DP2 DATA 2 INT BUS D Ø5 (1) H
DN2 DATA 2 INT BUS D Ø6 (1) H
DM2 DATA 2 INT BUS D Ø7 (1) H
STI INT BUS A Ø8 (1) H
STI INT BUS A Ø9 (1) H
STI INT BUS A 1Ø (1) H
STI INT BUS A 11 (1) H
74157 E61
DL2 DATA 2 INT BUS D Ø8 (1) H
DK2 DATA 2 INT BUS D Ø9 (1) H
DJ2 DATA 2 INT BUS D 1Ø (1) H
DH2 DATA 2 INT BUS D 11 (1) H
STI INT BUS A 12 (1) H
STI INT BUS A 13 (1) H
STI INT BUS A 14 (1) H
STI INT BUS A 15 (1) H
74157 E60
DF2 DATA 2 INT BUS D 12 (1) H
DE2 DATA 2 INT BUS D 13 (1) H
DD2 DATA 2 INT BUS D 14 (1) H
DB1 DATA 2 INT BUS D 15 (1) H
BUS 1 RKA Ø3 (1) H CV1
BUS 1 GATE DATA → BUS D L AA1
2:1 MULTIPLEXER
* NOTE: ALL OUTPUTS GO TO SHEET BUS 4.
FIRST USED ON OPTION/MODEL
RK11-D
QTY. DESCRIPTION PART NO ITEM NO
PARTS LIST
UNLESS OTHERWISE SPECIFIED DIMENSION IN INCHES. TOLERANCES
DECIMALS XXX ± .005 XX ± .02 X ± .1
ANGLES ± 0 30'
REMOVE BURRS AND BREAK SHARP CORNERS SURFACE QUALITY
MATERIAL
DRN J. Wilson DATE 7/14/72
CHK DATE
ENG DATE
MGR DATE
PROD R. Hurley DATE 10/4/72
NEXT HIGHER ASSY
EQUIPMENT CORPORATION
TITLE
DATA PATHS
(DATA 2)
SIZE D CODE NUMBER CSM7256-Ø-1 REV A
SHEET 4 OF
DIST
REV A
NUMBER CSM7256-Ø-1
SIZE D CODE
DIGITAL EQUIPMENT CORPORATION
REVISIONS REV CHANGE NO CHK
DRAWING 40-522 10040
DEC FORM NO DRD 102-B

This drawing and specifications herein are the property of Digital Equipment Corporation and shall not be reproduced or copied or used in whole or in part as the basis for the manufacture or sale of items without written permission. COPYRIGHT ©
DIGITAL EQUIPMENT CORPORATION

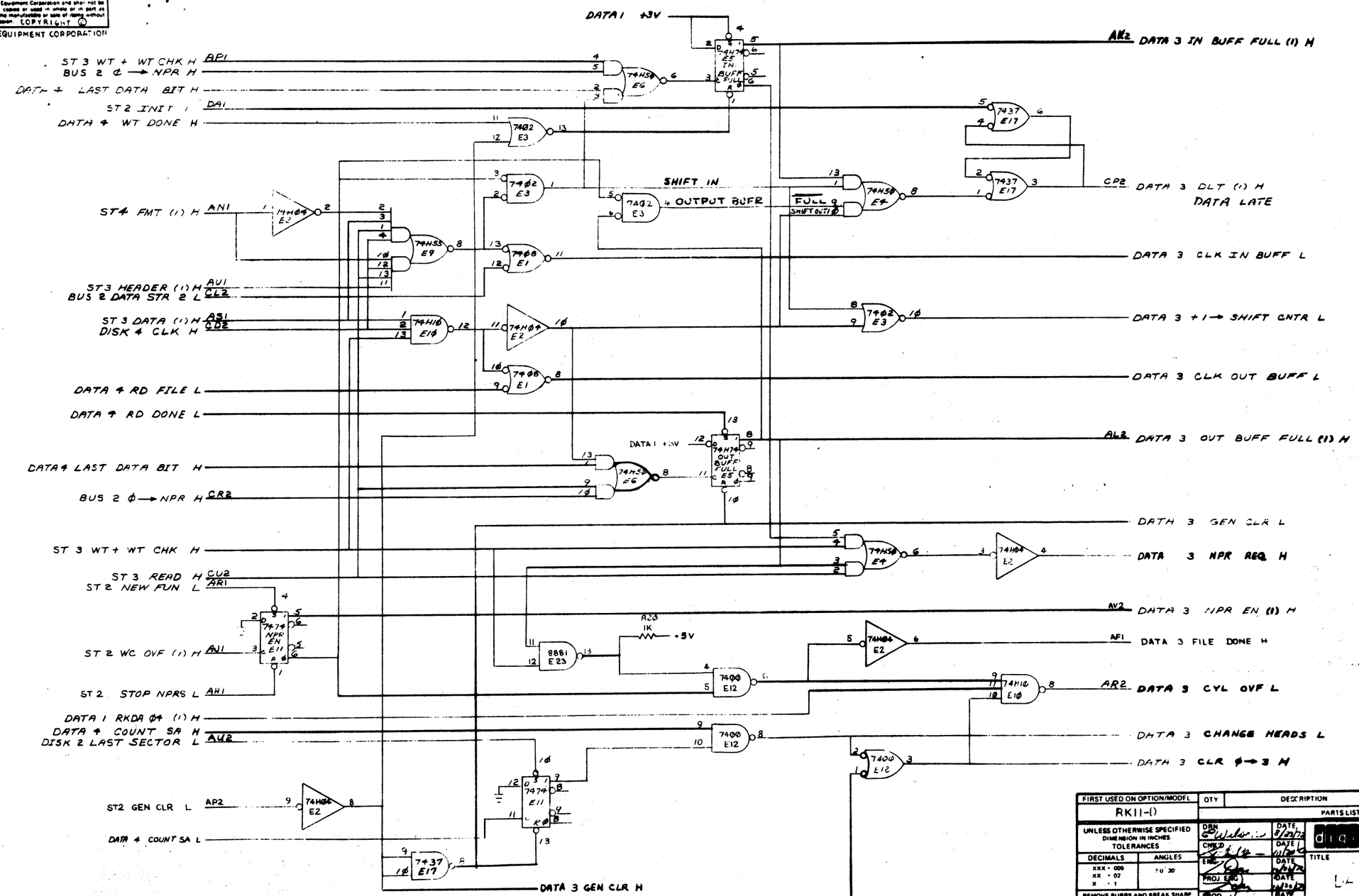

FIRST USED ON OPTION/MODEL	QTY	DESCRIPTION	PART NO	ITEM NO
RK11-Ø		PARTS LIST		

UNLESS OTHERWISE SPECIFIED DIMENSION IN INCHES TOLERANCES
DECIMALS: XXX ± .005, XX ± .02, X ± .1
ANGLES: ± 0° 30'
REMOVE BURRS AND BREAK SHARP CORNERS SURFACE QUALITY ✓
MATERIAL
FINISH

DRN: C. Wilson DATE 8/23/72
CHKD DATE 10/26/72
ENG DATE 11/6/72
PROJ ENG DATE 11/20/72
PROD DATE

digital EQUIPMENT CORPORATION MAYNARD MASSACHUSETTS

TITLE: DATA PATHS (DATA 3)

NEXT HIGHER ASSY: RK11 PANEL
SCALE: NONE
SHEET OF

SIZE D CODE NUMBER CS M7256-Ø-1 REV C
DIST

REVISIONS: REV | CHANGE NO | CHK

DRAWING 40 323 15840

This drawing and specifications, herein, are the property of Digital Equipment Corporation and shall not be reproduced or copied or used in whole or in part as the basis for the manufacture or sale of items without written permission. COPYRIGHT © DIGITAL EQUIPMENT CORPORATION

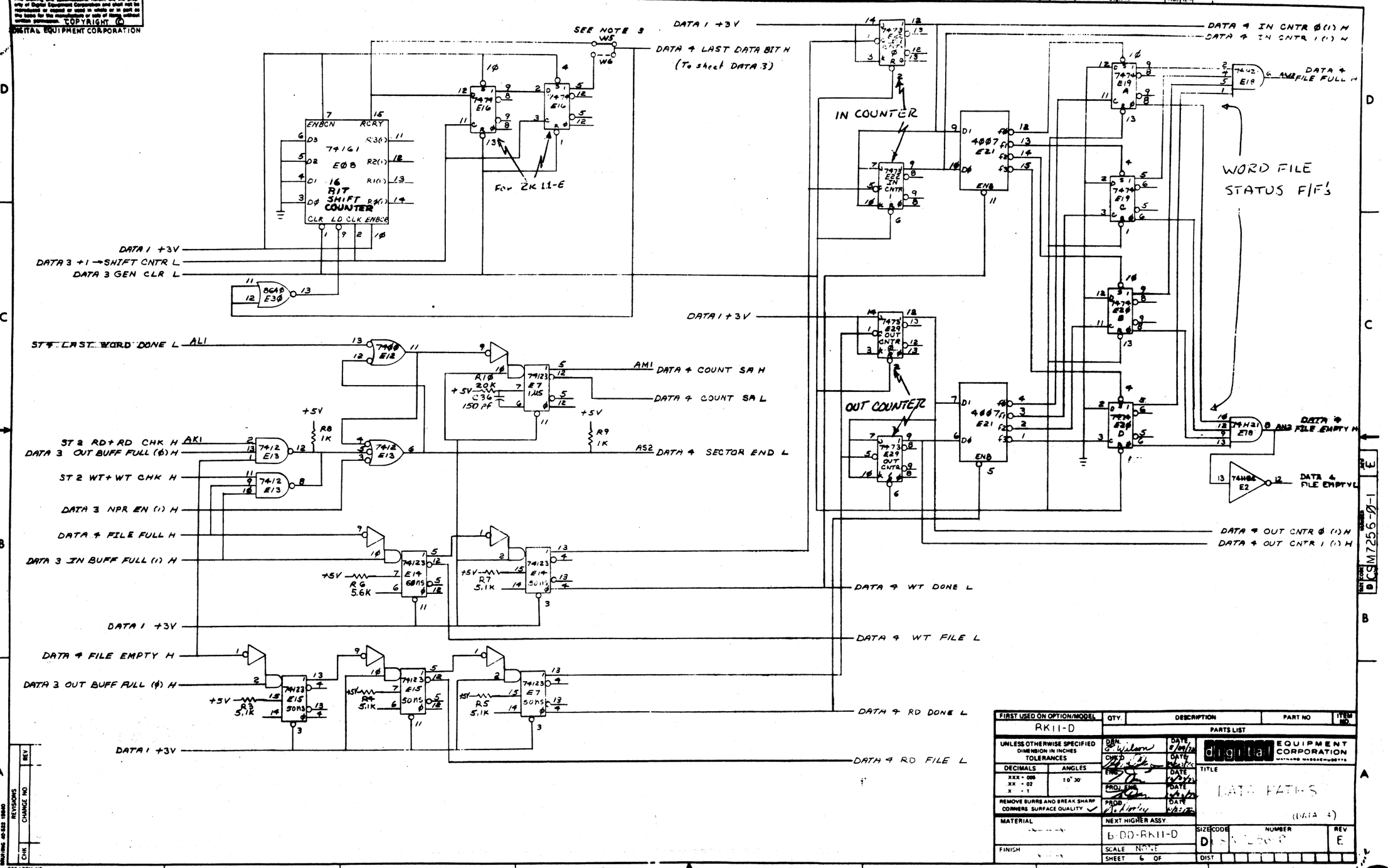

FIRST USED ON OPTION/MODEL	QTY.	DESCRIPTION	PART NO	ITEM NO.
RK11-D		PARTS LIST		

UNLESS OTHERWISE SPECIFIED DIMENSION IN INCHES TOLERANCES
DECIMALS: XXX ± .005, XX ± .02, X ± .1 — ANGLES: ± 0° 30'
REMOVE BURRS AND BREAK SHARP CORNERS SURFACE QUALITY ✓

MATERIAL
FINISH

DRN. G. Wilson DATE 8/10/72
CHK'D DATE
ENG. DATE
PROJ. ENG. DATE
PROD. DATE

digital EQUIPMENT CORPORATION MAYNARD MASSACHUSETTS

TITLE: DATA PATHS (DATA 4)

NEXT HIGHER ASSY: B-DD-RK11-D
SCALE: NONE
SHEET 6 OF

SIZE D CODE NUMBER [illegible] REV E
DIST

REVISIONS: REV / CHANGE NO / CHK

DRAWING 40-522 10040
DEC FORM NO DRD 100-B

This drawing and specifications, herein, are the property of Digital Equipment Corporation and shall not be reproduced or copied or used in whole or in part as the basis for the manufacture or sale of items without written permission. COPYRIGHT ©
DIGITAL EQUIPMENT CORPORATION

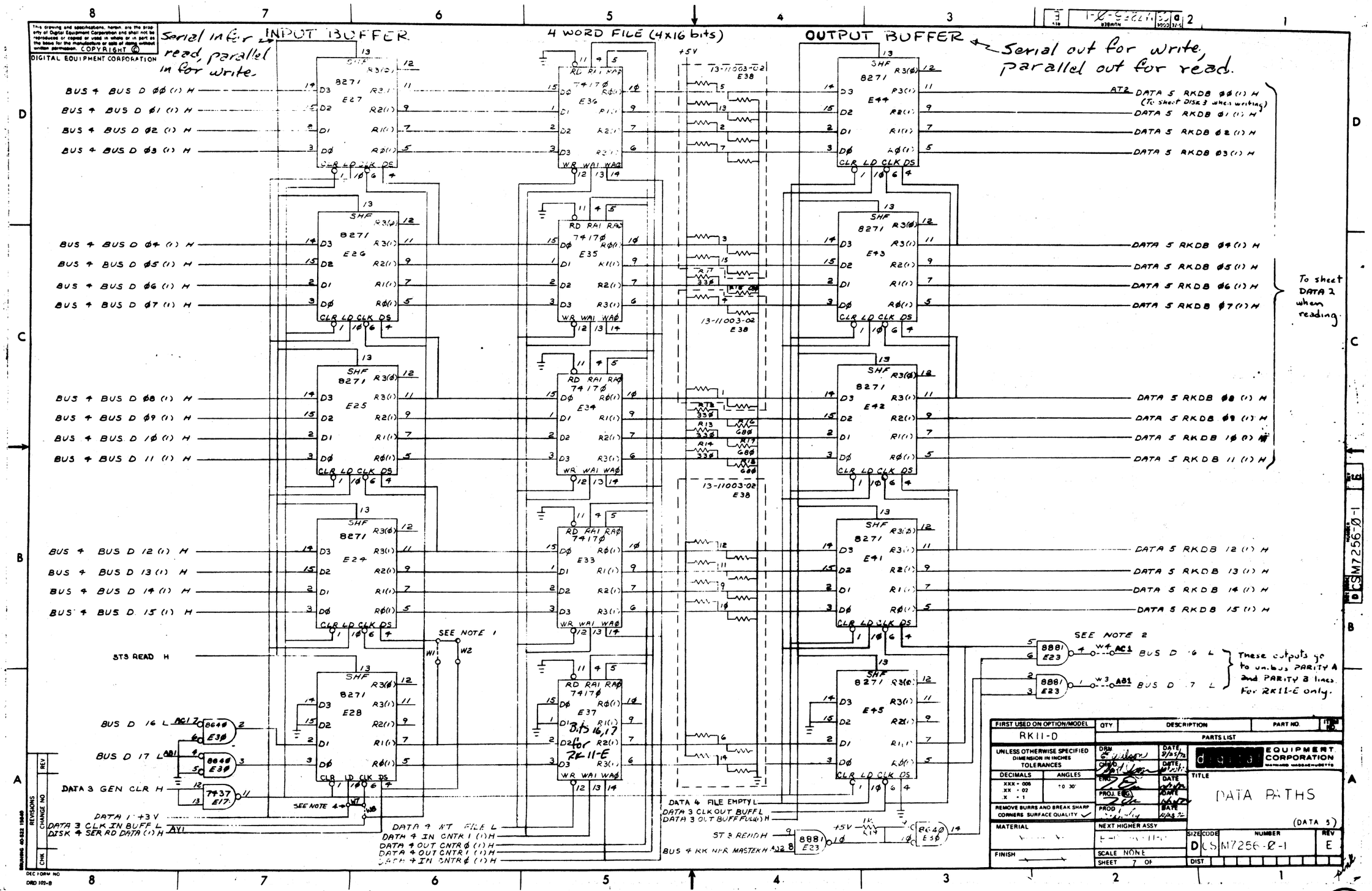

"THIS DRAWING AND SPECIFICATIONS, HEREIN, ARE THE PROPERTY OF DIGITAL EQUIPMENT CORPORATION AND SHALL NOT BE REPRODUCED OR COPIED OR USED IN WHOLE OR IN PART AS THE BASIS FOR THE MANUFACTURE OR SALE OF ITEMS WITHOUT WRITTEN PERMISSION COPYRIGHT © 1973 DIGITAL EQUIPMENT CORPORATION"

NOTES: 1. R19 AND R20 ARE OPTIONAL COMPONENTS DO NOT INSERT

2. W1, W3 THRU W8, W18, W22, W23, W25, W26 W28, ARE OPTIONAL JUMPERS. DO NOT INSERT.

* IF 8641'S ARE NOT AVAILABLE, USE 8888'S, PART NO. 1911117-00.

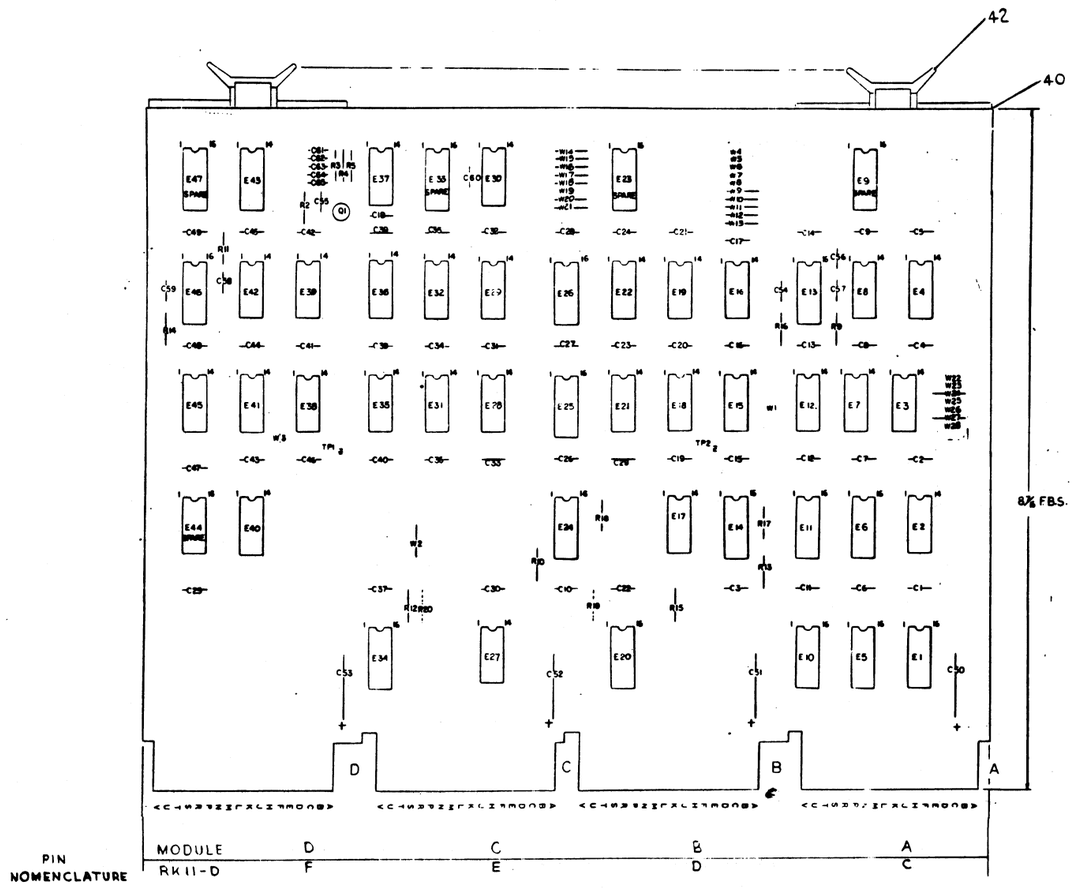

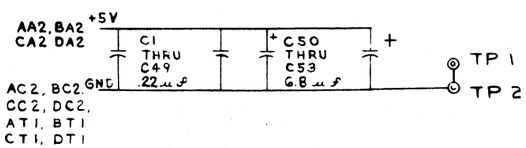

I.C. DEC 8640	1	8
IC DEC 74H103	11	4
IC DEC 314	1	8
IC DEC 7442	8	16
IC DEC 74123	8	16
IC DEC 74151	8	16
IC TYPE	GND	+5V

GND AND 5V ARE USUALLY PIN 7 AND 14 RESPECTIVELY EXCEPTIONS ARE STATED ABOVE

IC PIN LOCATIONS

QTY	REF DESIGNATION	DESCRIPTION	PART NO	ITEM NO
REF		X-Y CORDINATE HOLE LOC.	K-CO-M7257-0-4	1
REF		ASSY/DRILLING HOLE LAYOUT	D-AH-M7257-0-5	2
REF		MODULE ECO HISTORY	E-MH-M7257-0-4	3
1		ETCHED CIRCUIT BOARD	5009990	4
2	C58, C59	CAP 10 MMF 100V 5%	1000006	5
1	C54	CAP 270 MMF 100V 5%	1000022	6
2	C57, C60	CAP 330 MMF 100V 5%	1000023	7
1	C56	CAP 1200 MMF 100V 5%	1002424	8
49	C1 THRU C49	CAP .22 MF 50V 20%	1010274-01	9
4	C50 THRU C53	CAP 6.8 MFD 35V 10% TANT	1005306	10
5	C61 THRU C65	CAP 6.8 MMF 100V 5%	1000005	11
1	C55	CAP 27 MMF 100V 5%	1001739	12
1	Q1	TRANS DEC 3009B	1503100	13
3	R2, R3, R4,	RES. 330 1/4 W 5%	1300295	14
2	R10, R13	RES. 390 1/4 W 5%	1300309	15
1	R5	RES. 287 1/8 W, 1%	1305124	16
4	R12, R15, R17, R18	RES. 180 1/4 W 5%	1301322	17
1	R16	RES. 5.6K 1/4 W 5%	1301874	18
1	R9	RES. 4.7K 1/4 W 5%	1302177	19
2	R11, R14	RES. 5.11K 1/8 W 1%	1304854	20
				21
2	E16, E30	RES. 1K RESISTOR PACK	1300005-01	22
1	E19	I.C. 74H20	1905635	23
2	E22, E38	I.C. 7402	1909004	24
3	E18, E31, E37	I.C. 74H00	1909056	25
4	E40, E41, E42, E35	I.C. 74H74	1909667	26
1	E2	I.C. 314	1909704	27
4	E3, E4, E8, E27	I.C. 8881	1909705	28
3	E7, E12, E15	I.C. 8242	1909712	29
1	E21	I.C. 74H04	1909931	30
1	E26	I.C. 74151	1909936	31
2	E24, E25	I.C. 7442	1910046	32
1	E28	I.C. 7437	1910091	33
3	E36, E39, E45	I.C. 7408	1910155	34
3	E29, E32, E43	I.C. 74H103	1910409	35
2	E13, E46	I.C. 74123	1910436	36
1	E17	I.C. 86-C	1911469	37
* 8	E1, E5, E6, E10, E11, E14, E20, E34	I.C. 8641	1911579	38
15	W2, W9 THRU W18, W20, W21, W24, W27	INSULATED JUMPER	9009185	39
8		EYELET	9006732	40
2	TP1, TP2	SOLDER TERMINALS	9007791	41
4		HANDLE (FLIPCHIP) MAGENTA	9008337-06	42

PARTS LIST

FIRST USED ON OPTION MODEL: RK11-D

ETCH BOARD REV: C

CHK	REV	CHANGE NO	DEC NO	EIA NO	DEC NO	EIA NO

REVISIONS

SEMICONDUCTOR CONVERSION CHART

DRN: D. Lewis DATE 1/3/73
CHK: [illegible] DATE 10/4/73
ENG: DATE 11/18/71
PROJ ENG: DATE
PROD: DATE
NEXT HIGHER ASSY: B-DD-RK11-D
SCALE: NONE
SHEET _ OF _

digital EQUIPMENT CORPORATION

TITLE: BUS CONTROL RK11-D

SIZE DCS | CODE | NUMBER M7257-0-1 | REV. K

DIST

DCS M7257-0-1

59

THIS DRAWING AND SPECIFICATIONS, HEREIN, ARE THE PROPERTY OF DIGITAL EQUIPMENT CORPORATION AND SHALL NOT BE REPRODUCED OR COPIED OR USED IN WHOLE OR IN PART AS THE BASIS FOR THE MANUFACTURE OR SALE OF ITEMS WITHOUT WRITTEN PERMISSION. COPYRIGHT © 1973, DIGITAL EQUIPMENT CORPORATION

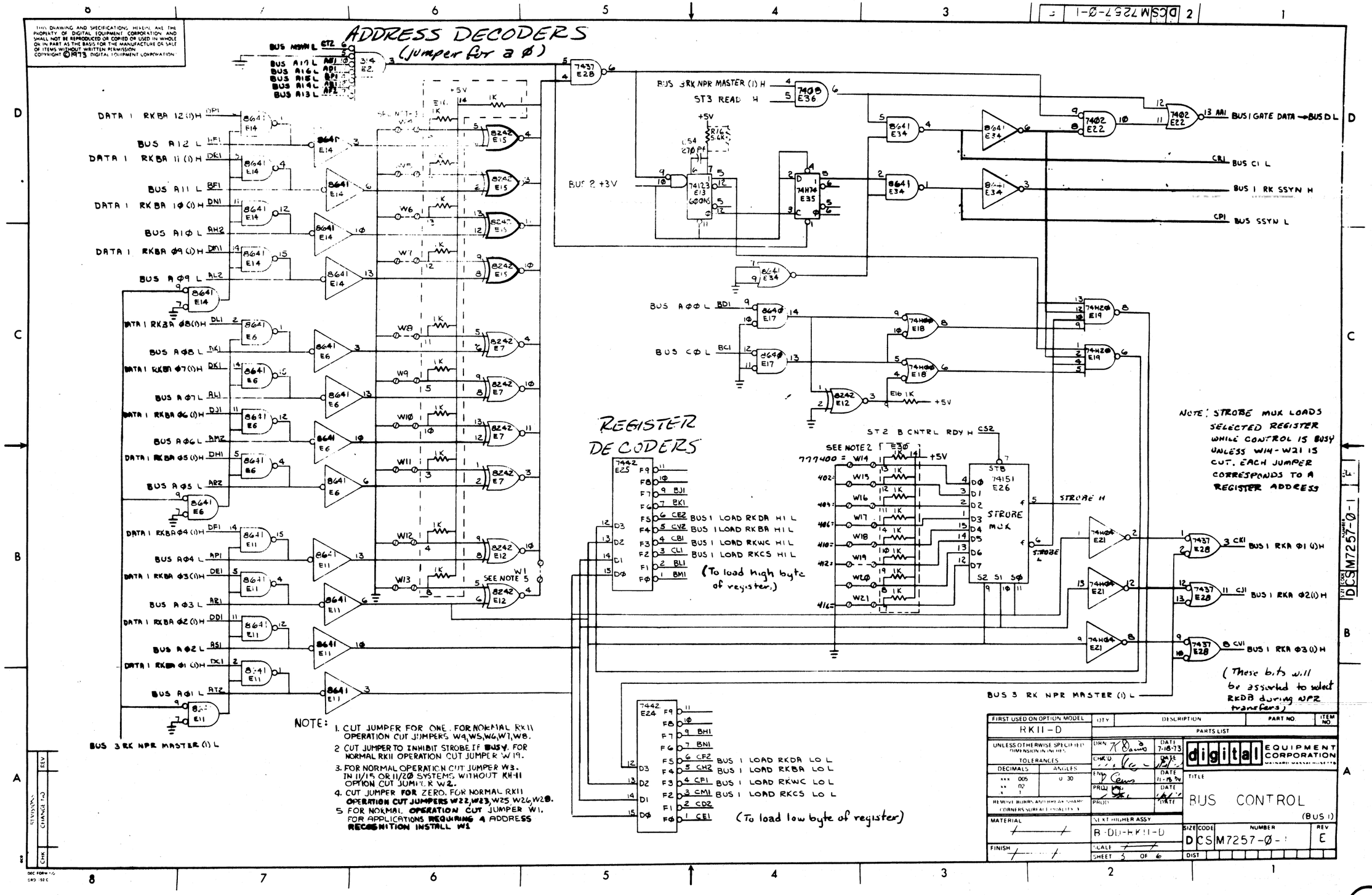

THIS DRAWING AND SPECIFICATIONS, HEREIN, ARE THE PROPERTY OF DIGITAL EQUIPMENT CORPORATION AND SHALL NOT BE REPRODUCED OR COPIED OR USED IN WHOLE OR IN PART AS THE BASIS FOR THE MANUFACTURE OR SALE OF ITEMS WITHOUT WRITTEN PERMISSION. COPYRIGHT © 1973, DIGITAL EQUIPMENT CORPORATION

SET UP UNIBUS TIMING AS FOLLOWS:

1. TIMING ADJUSTMENTS ARE MADE BY REMOVING CAPACITORS C61 THRU C65 AS REQUIRED. WITH C61 THRU C65 NOT INSTALLED THE OUTPUT OF E29 HAS A PERIOD OF ≈ 88 NSEC. REMOVAL OF EACH CAP DECREASES THIS BY ≈ 5 NSEC.
2. MAKE THE FOLLOWING MEASUREMENT AND ADJUSTMENT WHILE DOING A DISK WRITE.
   a. SYNC EXTERNALLY ON RK NPR MASTER(1)H
   b. MEASURE FROM BUS BBSY L TO BUS MSYN L. DELETE CAPACITORS AS REQUIRED TO MAKE THIS TIME EQUAL TO 150 NSEC MINIMUM.
3. TO VERIFY PROPER TIMING MAKE THE FOLLOWING MEASUREMENTS:
   a. WHILE DOING A DISK WRITE, SYNC EXTERNALLY ON END SYNC(1)H
   b. MEASURE FROM BUS SSYN L TO DATA STR 2 L EQUAL TO 75 NSEC MIN.
   c. MEASURE FROM BUS MSYN L TO Ø→NPR H EQUAL TO 75 NSEC MIN
   d. WHILE DOING A DISK READ, SYNC EXTERNALLY ON END SYNC(1)H
   e. MEASURE FROM BUS MSYN L TO Ø→NPR H EQUAL TO 75 NSEC MIN.
4. IF ANY TIMES MEASURED IN PART 3 ABOVE ARE LESS THAN 75 NSEC ADD ONE 6.8 CAP
5. IF ANY COMPONENT IN THE TIMING CIRCUIT IS REPLACED MEASUREMENTS MUST BE RETAKEN AND CAPACITORS ADDED OR REMOVED AS REQUIRED.

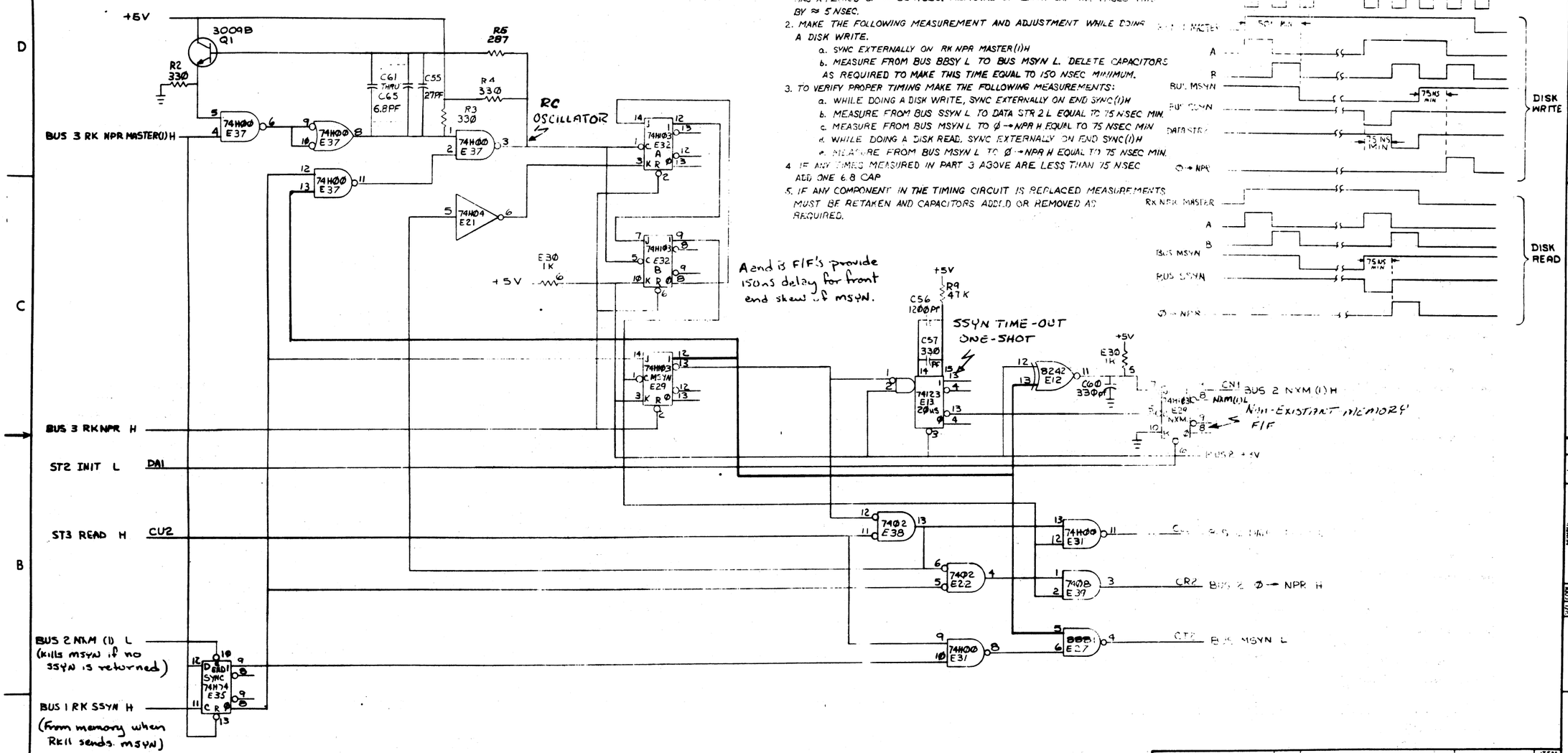

FIRST USED ON (MODEL NO.) RK11-(1)	QTY	DESCRIPTION	PART NO / ITEM NO
UNLESS OTHERWISE SPECIFIED DIMENSIONS IN INCHES TOLERANCES DECIMALS .XXX .005 .XX .02 .X .1		PARTS LIST	
MATERIAL			
FINISH			

digital EQUIPMENT CORPORATION

TITLE: [illegible] CONTROL (BUS 2)

SIZE D | CODE DCS | NUMBER M7257 | REV C

SHEET 4 OF [illegible]

REVISIONS: REV / CHANGE NO / CHK

DEC FORM NO DRD 103-C

M7257-Ø-1

61

"THIS DRAWING AND SPECIFICATIONS, HEREIN, ARE THE PROPERTY OF DIGITAL EQUIPMENT CORPORATION AND SHALL NOT BE REPRODUCED OR COPIED OR USED IN WHOLE OR IN PART AS THE BASIS FOR THE MANUFACTURE OR SALE OF ITEMS WITHOUT WRITTEN PERMISSION. COPYRIGHT ©1973, DIGITAL EQUIPMENT CORPORATION"

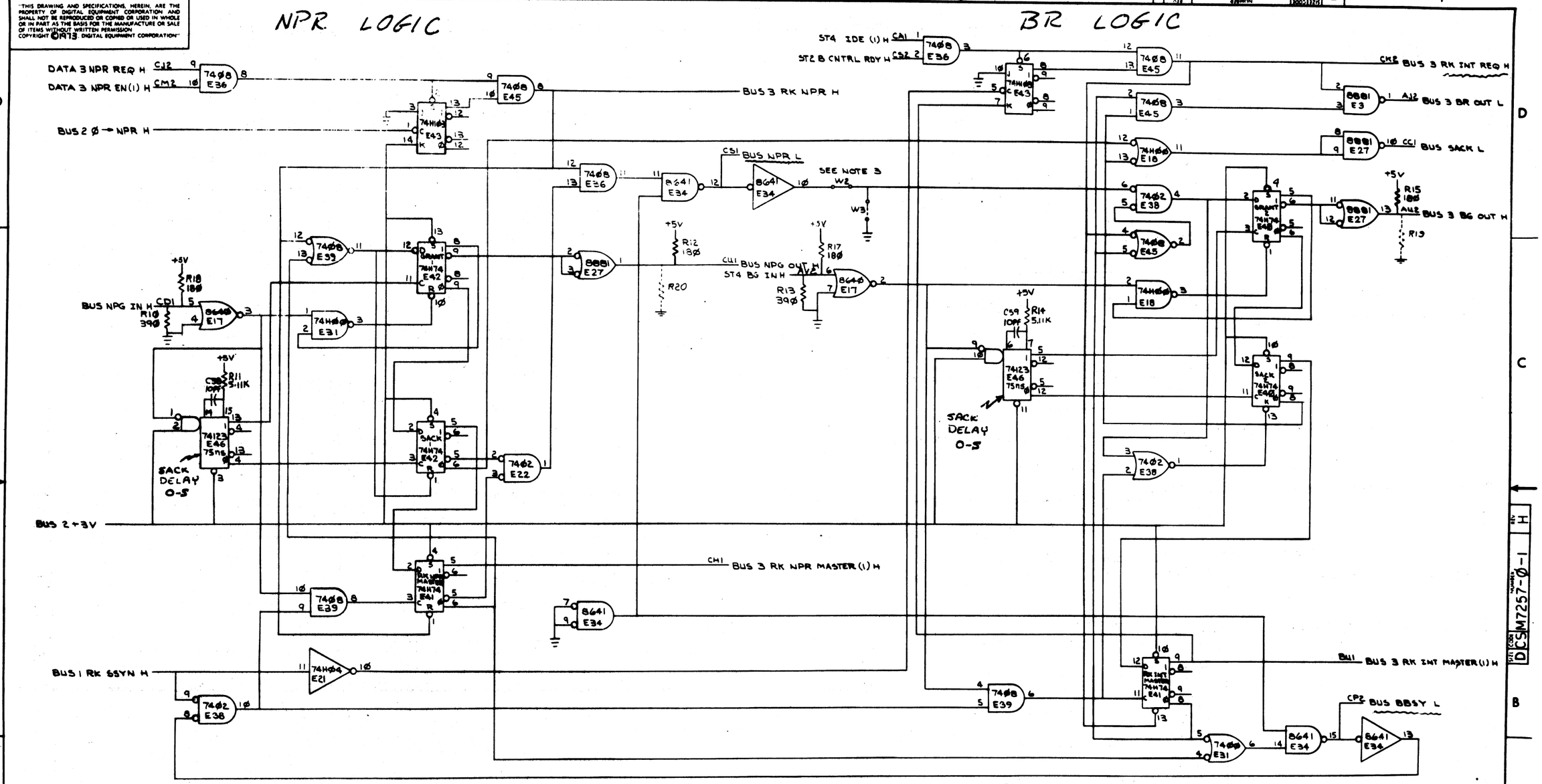

FIRST USED ON OPTION/MODEL	QTY.	DESCRIPTION	PART NO.	ITEM NO.
RK11-D		PARTS LIST		

UNLESS OTHERWISE SPECIFIED DIMENSION IN INCHES
TOLERANCES
DECIMALS .xxx ±.005 .xx ±.02 .x ±.1
ANGLES ±0° 30'
REMOVE BURRS AND BREAK SHARP CORNERS SURFACE QUALITY

MATERIAL
FINISH

DRN. DATE 7/27/73
DSN. DATE 7/31/73
ENG. DATE 11-13-74
PROJ. ENG. DATE
PROD. DATE

NEXT HIGHER ASSY. B-DD-RK-D
SCALE
SHEET 5 OF 6

digital EQUIPMENT CORPORATION MAYNARD MASSACHUSETTS

TITLE
BUS CONTROL
(BUS 3)

SIZE	CODE	NUMBER	REV.
D	CS	M7257-Ø-1	A

DIST

REVISIONS: REV | CHANGE NO | CHK

DEC FORM NO. DRD 102-C

COPYRIGHT © 1975
DIGITAL EQUIPMENT CORPORATION

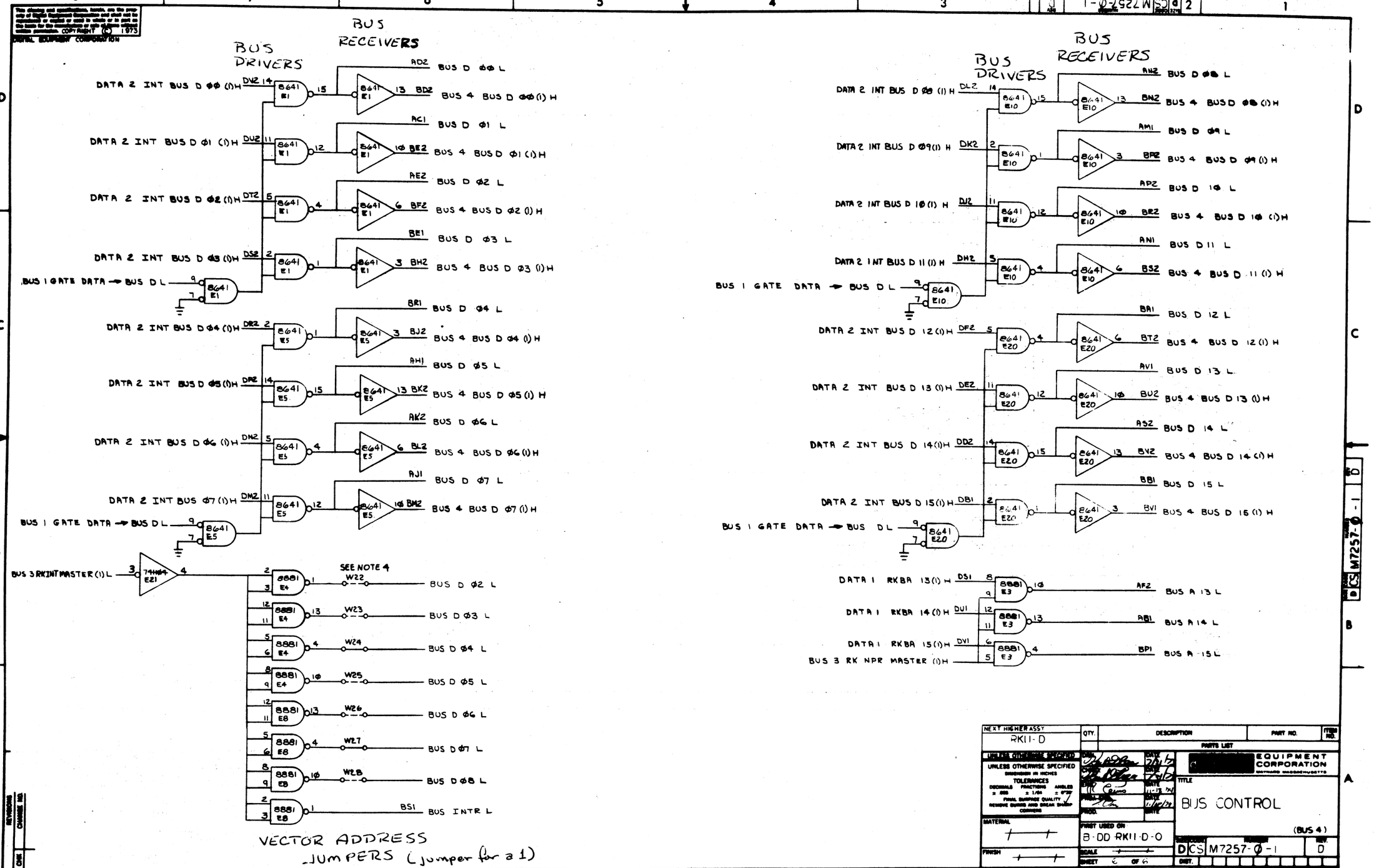

This drawing and specifications, herein, are the property of Digital Equipment Corporation and shall not be reproduced or copied or used in whole or in part as the basis for the manufacture or sale of items without written permission. COPYRIGHT ©
DIGITAL EQUIPMENT CORPORATION

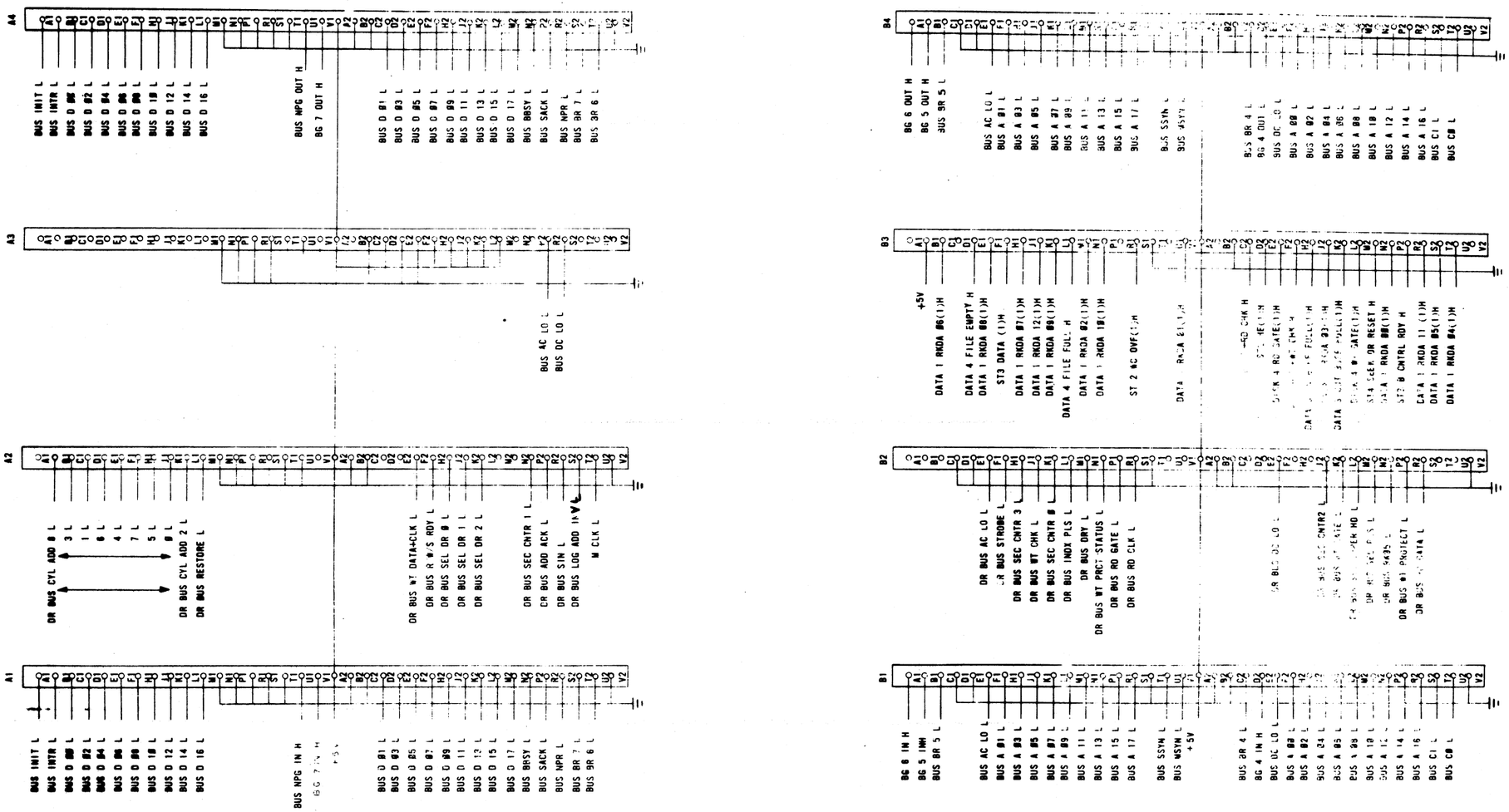

FIRST USED ON OPTION MODEL	QTY	DESCRIPTION	PART NO	ITEM NO
RKII-1		PARTS LIST		

UNLESS OTHERWISE SPECIFIED DIMENSION IN INCHES TOLERANCES

DECIMALS	ANGLES
XXX .005	0°0'
XX .02	
X .1	

REMOVE BURRS AND BREAK SHARP CORNERS. SURFACE QUALITY ✓

MATERIAL

FINISH

NEXT HIGHER ASSY

digital EQUIPMENT CORPORATION MAYNARD MASSACHUSETTS

TITLE RKII-D BACKPANEL

SIZE D CODE NUMBER D1CRKII-D-3 REV

REVISIONS: REV | CHANGE NO | CHK

DEC FORM NO ORD 101-B

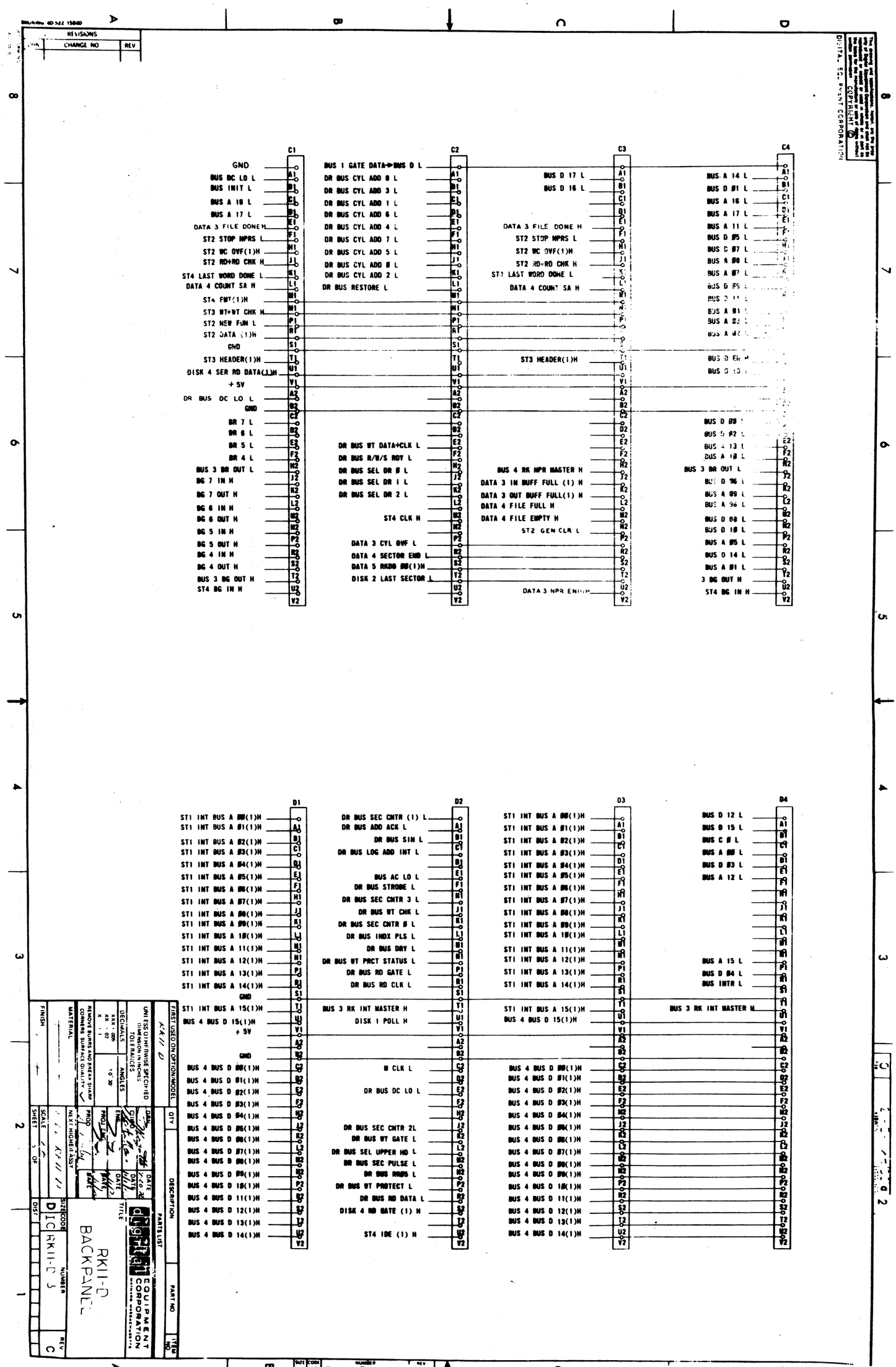
REVISIONS
CHANGE NO
REV
DIGITAL EQUIPMENT CORPORATION
C1
GND
BUS DC LO L
BUS INIT L
BUS A 16 L
BUS A 17 L
DATA 3 FILE DONE H
ST2 STOP NPRS L
ST2 WC OVF(1)H
ST2 RD+RD CHK H
ST4 LAST WORD DONE L
DATA 4 COUNT SA H
ST4 FMT(1)H
ST3 WT+WT CHK H
ST2 NEW FUN L
ST2 DATA (1)H
GND
ST3 HEADER(1)H
DISK 4 SER RD DATA(1)H
+ 5V
DR BUS DC LO L
GND
BR 7 L
BR 6 L
BR 5 L
BR 4 L
BUS 3 BR OUT L
BG 7 IN H
BG 7 OUT H
BG 6 IN H
BG 6 OUT H
BG 5 IN H
BG 5 OUT H
BG 4 IN H
BG 4 OUT H
BUS 3 BG OUT H
ST4 BG IN H
C2
BUS 1 GATE DATA→BUS D L
DR BUS CYL ADD 8 L
DR BUS CYL ADD 3 L
DR BUS CYL ADD 1 L
DR BUS CYL ADD 6 L
DR BUS CYL ADD 4 L
DR BUS CYL ADD 7 L
DR BUS CYL ADD 5 L
DR BUS CYL ADD 8 L
DR BUS CYL ADD 2 L
DR BUS RESTORE L
DR BUS WT DATA+CLK L
DR BUS R/W/S RDY L
DR BUS SEL DR 0 L
DR BUS SEL DR 1 L
DR BUS SEL DR 2 L
ST4 CLK H
DATA 3 CYL OVF L
DATA 4 SECTOR END L
DATA 5 RKDB 00(1)H
DISK 2 LAST SECTOR L
C3
BUS D 17 L
BUS D 16 L
DATA 3 FILE DONE H
ST2 STOP NPRS L
ST2 WC OVF(1)H
ST2 RD-RD CHK H
ST4 LAST WORD DONE L
DATA 4 COUNT SA H
ST3 HEADER(1)H
BUS 4 RK NPR MASTER H
DATA 3 IN BUFF FULL (1) H
DATA 3 OUT BUFF FULL(1) H
DATA 4 FILE FULL H
DATA 4 FILE EMPTY H
ST2 GEN CLR L
DATA 3 NPR ENB H
C4
BUS A 14 L
BUS D 01 L
BUS A 16 L
BUS A 17 L
BUS A 11 L
BUS D 05 L
BUS D 07 L
BUS A 00 L
BUS A 07 L
BUS A 01 L
BUS A 02 L
BUS 3 BR OUT L
BUS A 00 L
BUS D 00 L
BUS D 10 L
BUS A 05 L
BUS D 14 L
BUS A 01 L
3 BG OUT H
ST4 BG IN H
D1
ST1 INT BUS A 00(1)H
ST1 INT BUS A 01(1)H
ST1 INT BUS A 02(1)H
ST1 INT BUS A 03(1)H
ST1 INT BUS A 04(1)H
ST1 INT BUS A 05(1)H
ST1 INT BUS A 06(1)H
ST1 INT BUS A 07(1)H
ST1 INT BUS A 08(1)H
ST1 INT BUS A 09(1)H
ST1 INT BUS A 10(1)H
ST1 INT BUS A 11(1)H
ST1 INT BUS A 12(1)H
ST1 INT BUS A 13(1)H
ST1 INT BUS A 14(1)H
GND
ST1 INT BUS A 15(1)H
BUS 4 BUS D 15(1)H
+ 5V
GND
BUS 4 BUS D 00(1)H
BUS 4 BUS D 01(1)H
BUS 4 BUS D 02(1)H
BUS 4 BUS D 03(1)H
BUS 4 BUS D 04(1)H
BUS 4 BUS D 05(1)H
BUS 4 BUS D 06(1)H
BUS 4 BUS D 07(1)H
BUS 4 BUS D 08(1)H
BUS 4 BUS D 09(1)H
BUS 4 BUS D 10(1)H
BUS 4 BUS D 11(1)H
BUS 4 BUS D 12(1)H
BUS 4 BUS D 13(1)H
BUS 4 BUS D 14(1)H
D2
DR BUS SEC CNTR (1) L
DR BUS ADD ACK L
DR BUS SIN L
DR BUS LOG ADD INT L
BUS AC LO L
DR BUS STROBE L
DR BUS SEC CNTR 3 L
DR BUS WT CHK L
DR BUS SEC CNTR 0 L
DR BUS INDX PLS L
DR BUS DRY L
DR BUS WT PRCT STATUS L
DR BUS RD GATE L
DR BUS RD CLK L
BUS 3 RK INT MASTER H
DISK 1 POLL H
M CLK L
DR BUS DC LO L
DR BUS SEC CNTR 2L
DR BUS WT GATE L
DR BUS SEL UPPER HD L
DR BUS SEC PULSE L
DR BUS RWDS L
DR BUS WT PROTECT L
DR BUS RD DATA L
DISK 4 RD GATE (1) H
ST4 IDE (1) H
D3
ST1 INT BUS A 00(1)H
ST1 INT BUS A 01(1)H
ST1 INT BUS A 02(1)H
ST1 INT BUS A 03(1)H
ST1 INT BUS A 04(1)H
ST1 INT BUS A 05(1)H
ST1 INT BUS A 06(1)H
ST1 INT BUS A 07(1)H
ST1 INT BUS A 08(1)H
ST1 INT BUS A 09(1)H
ST1 INT BUS A 10(1)H
ST1 INT BUS A 11(1)H
ST1 INT BUS A 12(1)H
ST1 INT BUS A 13(1)H
ST1 INT BUS A 14(1)H
ST1 INT BUS A 15(1)H
BUS 4 BUS D 15(1)H
BUS 4 BUS D 00(1)H
BUS 4 BUS D 01(1)H
BUS 4 BUS D 02(1)H
BUS 4 BUS D 03(1)H
BUS 4 BUS D 04(1)H
BUS 4 BUS D 05(1)H
BUS 4 BUS D 06(1)H
BUS 4 BUS D 07(1)H
BUS 4 BUS D 08(1)H
BUS 4 BUS D 09(1)H
BUS 4 BUS D 10(1)H
BUS 4 BUS D 11(1)H
BUS 4 BUS D 12(1)H
BUS 4 BUS D 13(1)H
BUS 4 BUS D 14(1)H
D4
BUS D 12 L
BUS D 15 L
BUS C 0 L
BUS A 00 L
BUS D 03 L
BUS A 12 L
BUS A 15 L
BUS D 04 L
BUS INTR L
BUS 3 RK INT MASTER H
FIRST USED ON OPTION/MODEL
KK11 D
UNLESS OTHERWISE SPECIFIED
DIMENSION IN INCHES
TOLERANCES
DECIMALS
ANGLES
REMOVE BURRS AND BREAK SHARP CORNERS SURFACE QUALITY
MATERIAL
FINISH
QTY
DESCRIPTION
PARTS LIST
PART NO
ITEM NO
DATE
DRAWN
PROJ ENG
PROD
NEXT HIGHER ASSY
SCALE
SHEET
DIST
SIZE CODE
DICRKII-D-3
NUMBER
REV
C
TITLE
RKII-D
BACKPANEL
digital EQUIPMENT CORPORATION
DIC RKII-D-3 C

DRAWING 40-523 10840

REVISIONS		
CHK	CHANGE NO.	REV

The material and information herein is the property of Digital Equipment Corporation and shall not be reproduced or copied or used in whole or in part without written permission. COPYRIGHT © DIGITAL EQUIPMENT CORPORATION

	E1	E2	E3	E4
ST4 IDE(1)H	A1	DATA 1 RKDA 00(1)H	A1	ST4 IDE (1)H
BUS 1 LOAD RKWC HI L	B1	DATA 1 RKDA 01(1)H	B1	BUS 1 LOAD RKWC HI L
DATA 1 RKDA 02(1)H	C1		C1	BUS SACK L
DATA 1 RKDA 03(1)H	D1		D1	BUS NPG IN H
ST4 CLK H	E1	DATA 1 RKDA 04(1)H	E1	
BUS 1 LOAD RKWC LO L	F1	DATA 1 RKDA 05(1)H	F1	BUS 1 LOAD RKWC LO L
BUS 4 RK NPR MASTER H	H1	DATA 1 RKDA 06(1)H	H1	BUS 4 RK NPR MASTER H
BUS 1 RKA 02(1)H	J1	DATA 1 RKDA 07(1)H	J1	BUS 1 RKA 02(1)H
BUS 1 RKA 03(1)H	K1	DATA 1 RKDA 08(1)H	K1	BUS 1 RKA 01(1)H
BUS 1 LOAD RKCS HI L	L1	DATA 1 RKDA 09(1)H	L1	BUS 1 LOAD RKCS HI L
BUS 1 LOAD RKCS LO L	M1	DATA 1 RKDA 10(1)H	M1	BUS 1 LOAD RKCS LO L
BUS 2 NXM(1)H	N1	DATA 1 RKDA 11(1)H	N1	BUS 2 NXM (1)H
DATA 3 DLT(1)H	P1	DATA 1 RKDA 12(1)H	P1	BUS SSYN L
BUS 2 0→NPR H	R1	DATA 1 RKDA 13(1)H	R1	BUS CI L
DATA 1 RKDA OVF L	S1	DATA 1 RKDA 14(1)H	S1	BUS NPR L
GND	T1	DATA 1 RKDA 15(1)H	T1	BUS NPG OUT H
ST3 READ H	U1		U1	
DISK 2 RKDS 00(1)H	V1		V1	
+5V	A2		A2	
	B2		B2	
GND	C2		C2	
DISK 2 RKDS 01(1)H	D2		D2	
DISK 2 RKDS 02(1)H	E2		E2	
DISK 2 RKDS 03(1)H	F2		F2	
DISK 2 SC=SA H	H2		H2	
DISK 2 WT PRCT STATUS H	J2		J2	
ST4 IBA (B) H	K2		K2	
DISK 2 DRY H	L2		L2	
DISK 2 SECTOR PULSE H	M2		M2	
DISK 2 SIM H	N2		N2	
DISK 2 R/W/S RDY H	P2		P2	
ST2 GEN CLR L	R2		R2	
ST2 B CNTRL RDY H	S2		S2	
ST2 INIT H	T2		T2	
ST2 FIRST SEEK DONE H	U2		U2	
ST2 XFER FUNCTION H	V2		V2	

	E2	E3
		BUS 1 RKA 03(1)H
		ST4 CLK H
		BUS 1 LOAD RKBA HI L
		BUS 1 LOAD RKBA LO L
		BUS 1 LOAD RKBA LO L
		DATA 3 NPR REQ H
	BUS 3 RK INT REQ H	ST4 IBA (B) H
		BUS 2 DATA STR 2 L
		BUS 1 RKA 01 (1) H
		BUS 1 RKA 02 (1) H
		DATA 3 DLT (1) H
		BUS 2 0→NPR H
		DATA 1 RKBA OVF L
		ST3 READ H
		BUS 1 LOAD RKBA HI L

	F1	F2	F3	F4
ST2 INIT L	A1		A1	
DISK 2 DRIVE UNSAFE H	B1		B1	
DISK 2 RKDS H	C1		C1	
DISK 3 DPL (1)H	D1		D1	
DISK 1 ID 0(1)H	E1		E1	
DISK 1 ID 1(1)H	F1		F1	
DISK 1 ID 2(1)H	H1		H1	
DISK 2 ADD ACK H	J1		J1	
DISK 2 ILLEGAL ADD H	K1		K1	
DISK 4 RD HEADER(1)H	L1		L1	
DISK 4 RD DATA=WT DATA H	M1		M1	
DISK 2 DRIVE OK H	N1		N1	
DISK 4 WT GATE (1)H	P1		P1	
DISK 3 DRE(1)H	R1		R1	
DISK 1 SCH CMP (1)H	S1		S1	
GND	T1		T1	
DISK 1 POLL DONE L	U1		U1	
DISK 4 DISK CLK L	V1		V1	
+5V	A2		A2	
	B2		B2	
GND	C2		C2	
ST2 LAST BIT H	D2		D2	
ST3 GEN DATA H	E2		E2	
ST3 CLR WSR L	F2		F2	
ST3 WRITE H	H2		H2	
ST3 RD GATE FN H	J2		J2	
ST3 DRIVE RESET H	K2		K2	
ST4 SEEK OR RESET H	L2		L2	
ST3 PREAMBLE (1)H	M2		M2	
ST2 STOP POLL L	N2		N2	
ST4 HEAD+CHK SUM H	P2		P2	
ST3 END OF SYNC H	R2		R2	
ST3 BIT LOCK H	S2		S2	
ST2 HE (1) H	T2		T2	
ST4 HEAD OK (1) H	U2		U2	
ST4 EX BIT (1) H	V2		V2	

	F2	F3
		DATA 2 INT BUS D 15(1)H
		DATA 1 RKBA 01 (1)H
		DATA 1 RKBA 02 (1)H
		DATA 1 RKBA 03 (1)H
		DATA 1 RKBA 04 (1)H
		DATA 1 RKBA 05 (1)H
		DATA 1 RKBA 06 (1)H
		DATA 1 RKBA 07 (1)H
		DATA 1 RKBA 08 (1)H
		DATA 1 RKBA 09 (1)H
		DATA 1 RKBA 10 (1)H
		DATA 1 RKBA 11 (1)H
		DATA 1 RKBA 12 (1)H
		DATA 1 RKBA 13 (1)H
		DATA 1 RKBA 14 (1)H
		DATA 1 RKBA 15 (1)H
		DATA 2 INT BUS D 00 (1)H
		DATA 2 INT BUS D 01 (1)H
		DATA 2 INT BUS D 02 (1)H
		DATA 2 INT BUS D 03 (1)H
		DATA 2 INT BUS D 04 (1)H
		DATA 2 INT BUS D 05 (1)H
		DATA 2 INT BUS D 06 (1)H
		DATA 2 INT BUS D 07 (1)H
		DATA 2 INT BUS D 08 (1)H
		DATA 2 INT BUS D 09 (1)H
		DATA 2 INT BUS D 10 (1)H
		DATA 2 INT BUS D 11 (1)H
		DATA 2 INT BUS D 12 (1)H
		DATA 2 INT BUS D 13 (1)H
		DATA 2 INT BUS D 14 (1)H
		DATA 2 INT BUS D 15 (1)H

FINISH	MATERIAL	FIRST USED ON PDP11/70 MODEL
	REMOVE BURRS AND BREAK SHARP CORNERS. SURFACE QUALITY	UNLESS OTHERWISE SPECIFIED DIMENSIONS ARE IN INCHES TOLERANCES DECIMALS ANGLES
	NEXT HIGHER ASSY	DIGITAL EQUIPMENT CORPORATION MAYNARD, MASSACHUSETTS
SIZE D	CODE IC	NUMBER RKII-D-3	REV A
RKII-D BACKPANEL		

66

D IC RKII-D-3 A

DESIGNATES PARALLEL TRANSFER
DESIGNATES SERIAL TRANSFER

RK11-D, E DATA PATHS

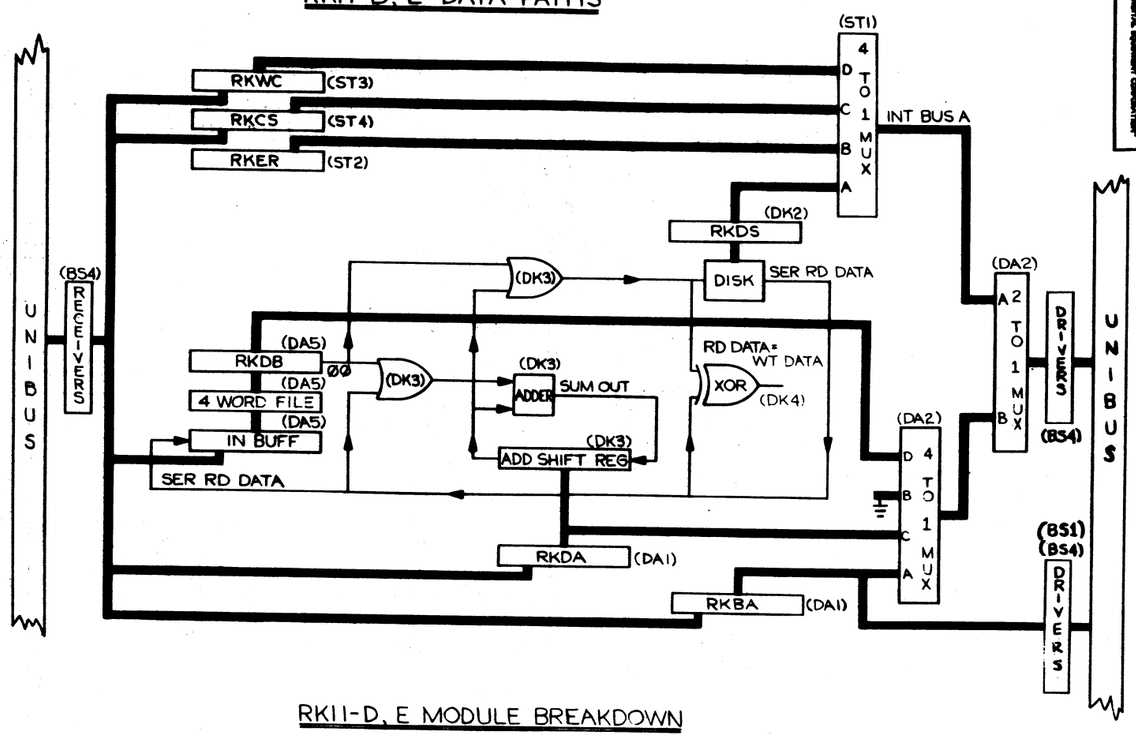

RK11-D, E MODULE BREAKDOWN

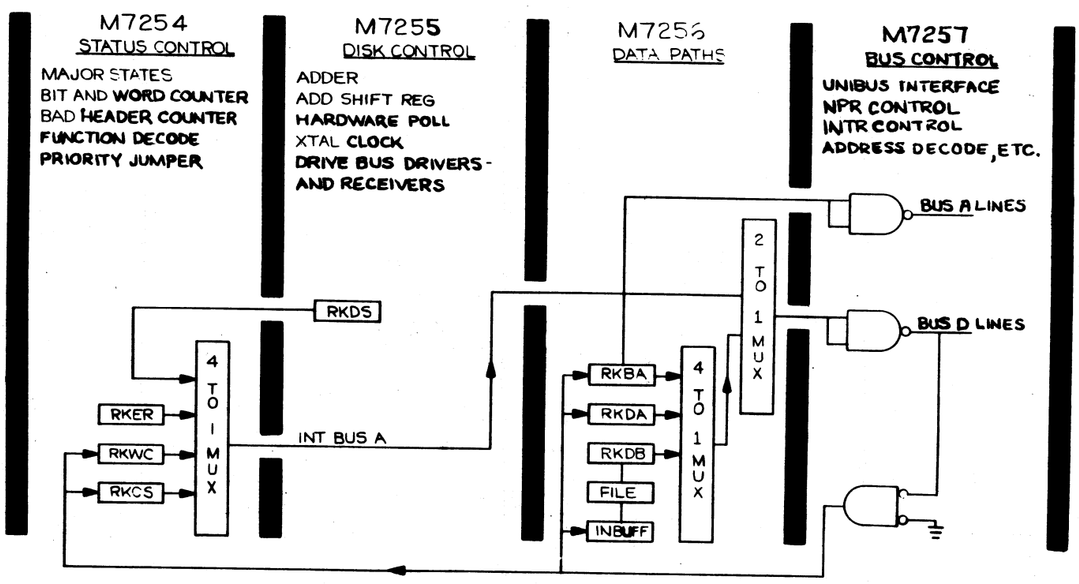

FLOW DRAWING EXAMPLE

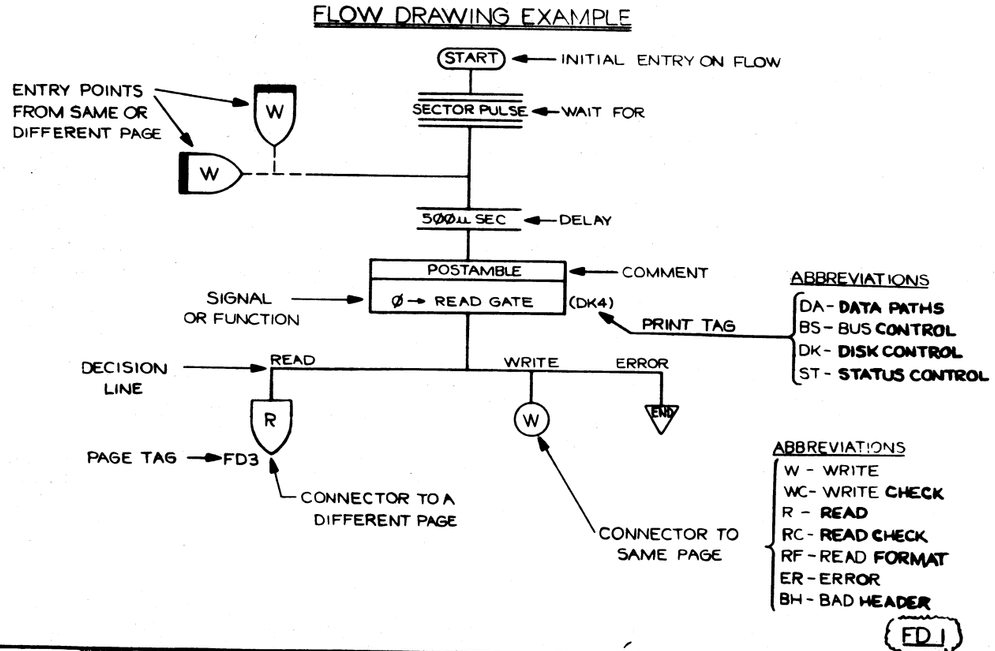

FD1

TITLE	RK11-D,E FUNCTION FLOWS
SIZE/CODE	D FD
NUMBER	RK11-D-9
SCALE	B-DD-RK11-D
SHEET	1 OF 5
DFD	RK11-D-9

THIS DRAWING AND SPECIFICATIONS, HEREIN, ARE THE PROPERTY OF DIGITAL EQUIPMENT CORPORATION AND SHALL NOT BE REPRODUCED OR COPIED OR USED IN WHOLE OR IN PART AS THE BASIS FOR MANUFACTURE OR SALE WITHOUT WRITTEN PERMISSION. COPYRIGHT © 1971, DIGITAL EQUIPMENT CORPORATION

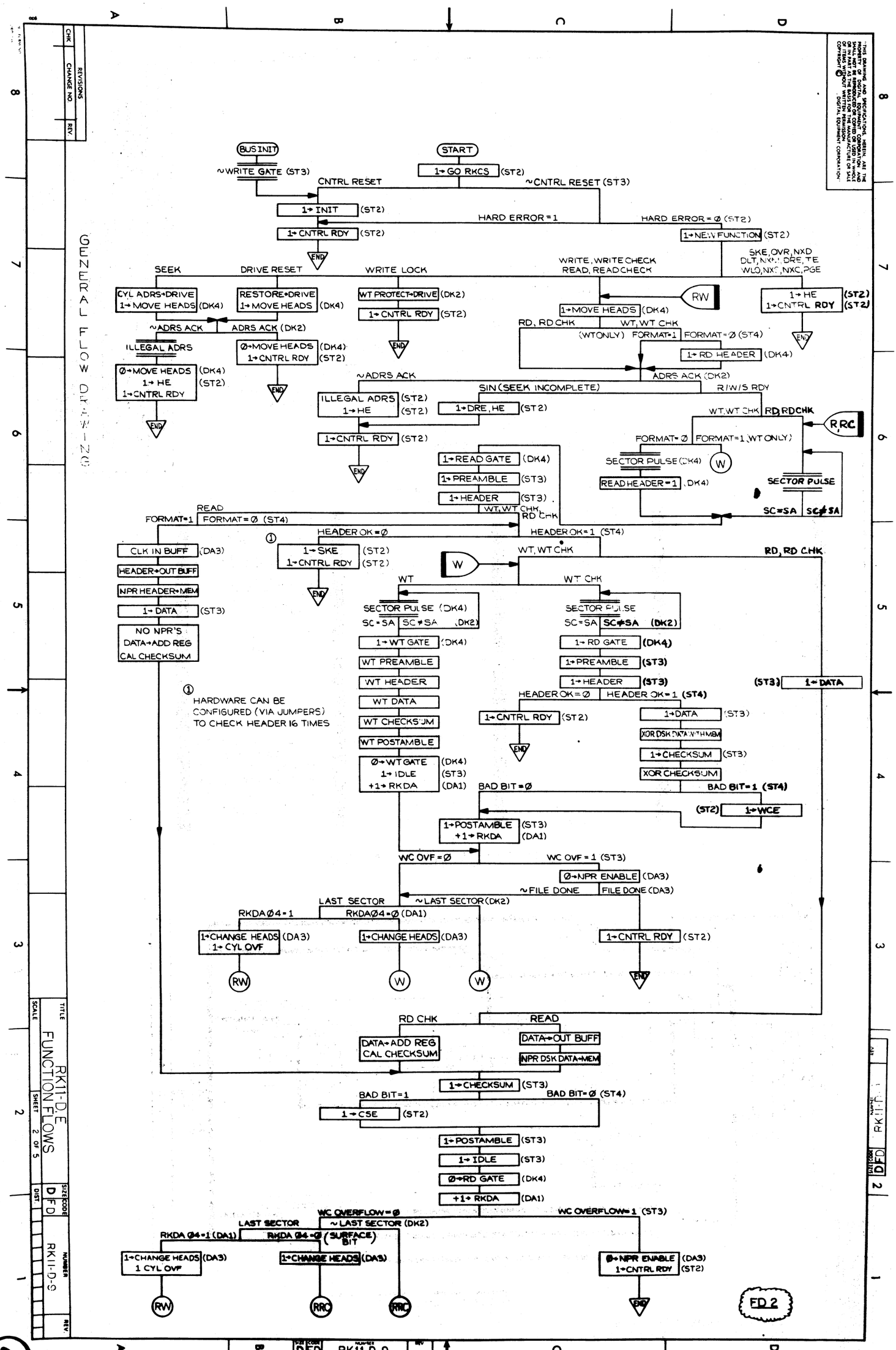
GENERAL FLOW DIAGRAM
BUS INIT
~WRITE GATE (ST3)
START
1→GO RKCS (ST2)
CNTRL RESET
~CNTRL RESET (ST3)
1→INIT (ST2)
HARD ERROR=1
HARD ERROR=Ø (ST2)
1→CNTRL RDY (ST2)
1→NEW FUNCTION (ST2)
END
SEEK
DRIVE RESET
WRITE LOCK
WRITE, WRITE CHECK
READ, READ CHECK
SKE, OVR, NXD
DLT, NXM, DRE, TE
WLO, NXT, NXC, PGE
CYL ADRS→DRIVE
1→MOVE HEADS (DK4)
RESTORE→DRIVE
1→MOVE HEADS (DK4)
WT PROTECT→DRIVE (DK2)
1→CNTRL RDY (ST2)
RW
1→MOVE HEADS (DK4)
1→HE
1→CNTRL RDY
(ST2)
(ST2)
~ADRS ACK
ADRS ACK (DK2)
RD, RD CHK
WT, WT CHK
(WT ONLY)
FORMAT=1
FORMAT=Ø (ST4)
ILLEGAL ADRS
Ø→MOVE HEADS
1→HE
1→CNTRL RDY
(DK4)
(ST2)
Ø→MOVE HEADS (DK4)
1→CNTRL RDY (ST2)
1→RD HEADER (DK4)
~ADRS ACK
ADRS ACK (DK2)
SIN (SEEK INCOMPLETE)
R/W/S RDY
ILLEGAL ADRS (ST2)
1→HE (ST2)
1→DRE, HE (ST2)
WT, WT CHK
RD, RD CHK
R, RC
1→CNTRL RDY (ST2)
FORMAT=Ø
FORMAT=1 (WT ONLY)
1→READ GATE (DK4)
1→PREAMBLE (ST3)
1→HEADER (ST3)
SECTOR PULSE (DK4)
W
READ HEADER=1 (DK4)
SECTOR PULSE
SC=SA
SC≠SA
READ
FORMAT=1
FORMAT=Ø (ST4)
WT, WT CHK
RD CHK
HEADER OK=Ø
HEADER OK=1 (ST4)
CLK IN BUFF (DA3)
HEADER→OUT BUFF
NPR HEADER→MEM
1→DATA (ST3)
NO NPR'S
DATA→ADD REG
CAL CHECKSUM
1→SKE (ST2)
1→CNTRL RDY (ST2)
W
WT, WT CHK
RD, RD CHK
WT
WT CHK
SECTOR PULSE (DK4)
SC=SA
SC≠SA (DK2)
SECTOR PULSE
SC=SA
SC≠SA (DK2)
1→WT GATE (DK4)
WT PREAMBLE
WT HEADER
WT DATA
WT CHECKSUM
WT POSTAMBLE
Ø→WT GATE (DK4)
1→IDLE (ST3)
+1→RKDA (DA1)
1→RD GATE (DK4)
1→PREAMBLE (ST3)
1→HEADER (ST3)
(ST3)
1→DATA
HEADER OK=Ø
HEADER OK=1 (ST4)
1→CNTRL RDY (ST2)
1→DATA (ST3)
XOR DSK DATA WITH MEM
1→CHECKSUM (ST3)
XOR CHECKSUM
BAD BIT=Ø
BAD BIT=1 (ST4)
(ST2)
1→WCE
1→HARDWARE CAN BE CONFIGURED (VIA JUMPERS) TO CHECK HEADER 16 TIMES
1→POSTAMBLE (ST3)
+1→RKDA (DA1)
WC OVF=Ø
WC OVF=1 (ST3)
Ø→NPR ENABLE (DA3)
~FILE DONE
FILE DONE (DA3)
LAST SECTOR
~LAST SECTOR (DK2)
RKDAØ4=1
RKDAØ4=Ø (DA1)
1→CHANGE HEADS (DA3)
1→CYL OVF
1→CHANGE HEADS (DA3)
1→CNTRL RDY (ST2)
RW
W
W
RD CHK
READ
DATA→ADD REG
CAL CHECKSUM
DATA→OUT BUFF
NPR DSK DATA→MEM
1→CHECKSUM (ST3)
BAD BIT=1
BAD BIT=Ø (ST4)
1→CSE (ST2)
1→POSTAMBLE (ST3)
1→IDLE (ST3)
Ø→RD GATE (DK4)
+1→RKDA (DA1)
WC OVERFLOW=Ø
WC OVERFLOW=1 (ST3)
LAST SECTOR
~LAST SECTOR (DK2)
RKDA Ø4=1 (DA1)
RKDA Ø4=Ø (SURFACE BIT)
1→CHANGE HEADS (DA3)
1 CYL OVF
1→CHANGE HEADS (DA3)
Ø→NPR ENABLE (DA3)
1→CNTRL RDY (ST2)
RW
RRC
RRC
END
FD 2
DFD
RK11-D-9
REVISIONS
CHK
CHANGE NO.
REV
TITLE
RK11-D,E
FUNCTION FLOWS
SCALE
SHEET 2 OF 5
DIST
SIZE
D
CODE
FD
NUMBER
RK11-D-9
REV
68

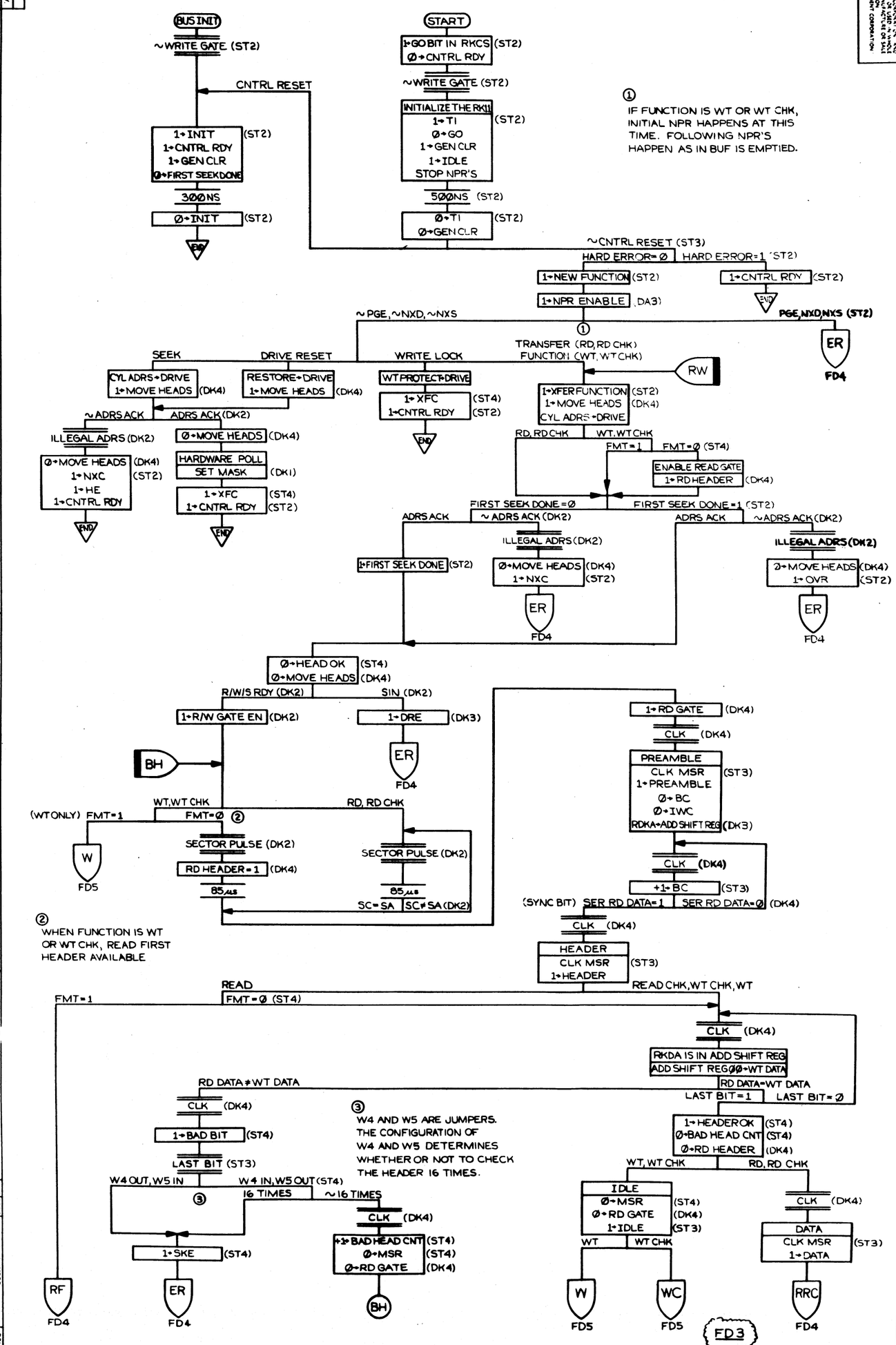
BUS INIT
~WRITE GATE (ST2)
CNTRL RESET
1→INIT
1→CNTRL RDY
1→GEN CLR
Ø→FIRST SEEKDONE
(ST2)
300NS
Ø→INIT (ST2)
END
START
1→GO BIT IN RKCS (ST2)
Ø→CNTRL RDY
~WRITE GATE (ST2)
INITIALIZE THE RK11
1→TI
Ø→GO
1→GEN CLR
1→IDLE
STOP NPR'S
(ST2)
500NS (ST2)
Ø→TI
Ø→GEN CLR
(ST2)
① IF FUNCTION IS WT OR WT CHK, INITIAL NPR HAPPENS AT THIS TIME. FOLLOWING NPR'S HAPPEN AS IN BUF IS EMPTIED.
~CNTRL RESET (ST3)
HARD ERROR=Ø
HARD ERROR=1 (ST2)
1→NEW FUNCTION (ST2)
1→CNTRL RDY (ST2)
1→NPR ENABLE (DA3)
~PGE, ~NXD, ~NXS
PGE, NXD, NXS (ST2)
ER
FD4
TRANSFER (RD, RD CHK)
FUNCTION (WT, WT CHK)
RW
SEEK
DRIVE RESET
WRITE LOCK
CYL ADRS→DRIVE
1→MOVE HEADS (DK4)
RESTORE→DRIVE
1→MOVE HEADS (DK4)
WT PROTECT→DRIVE
1→XFC (ST4)
1→CNTRL RDY (ST2)
END
1→XFER FUNCTION (ST2)
1→MOVE HEADS (DK4)
CYL ADRS→DRIVE
~ADRS ACK
ADRS ACK (DK2)
ILLEGAL ADRS (DK2)
Ø→MOVE HEADS (DK4)
1→NXC (ST2)
1→HE
1→CNTRL RDY
END
Ø→MOVE HEADS (DK4)
HARDWARE POLL
SET MASK (DK1)
1→XFC (ST4)
1→CNTRL RDY (ST2)
END
RD, RD CHK
WT, WT CHK
FMT=1
FMT=Ø (ST4)
ENABLE READ GATE
1→RD HEADER (DK4)
FIRST SEEK DONE=Ø
FIRST SEEK DONE=1 (ST2)
ADRS ACK
~ADRS ACK (DK2)
ILLEGAL ADRS (DK2)
1→FIRST SEEK DONE (ST2)
Ø→MOVE HEADS (DK4)
1→NXC (ST2)
ER
FD4
ADRS ACK
~ADRS ACK (DK2)
ILLEGAL ADRS (DK2)
Ø→MOVE HEADS (DK4)
1→OVR (ST2)
ER
FD4
Ø→HEAD OK (ST4)
Ø→MOVE HEADS (DK4)
R/W/S RDY (DK2)
SIN (DK2)
1→R/W GATE EN (DK2)
1→DRE (DK3)
ER
FD4
BH
WT, WT CHK
RD, RD CHK
(WT ONLY) FMT=1
FMT=Ø ②
W
FD5
SECTOR PULSE (DK2)
RD HEADER=1 (DK4)
85μs
SECTOR PULSE (DK2)
85μs
SC=SA
SC≠SA (DK2)
② WHEN FUNCTION IS WT OR WT CHK, READ FIRST HEADER AVAILABLE
1→RD GATE (DK4)
CLK (DK4)
PREAMBLE
CLK MSR
1→PREAMBLE
Ø→BC
Ø→IWC
RDKA→ADD SHIFT REG (DK3)
(ST3)
CLK (DK4)
+1→BC (ST3)
(SYNC BIT) SER RD DATA=1
SER RD DATA=Ø (DK4)
CLK (DK4)
HEADER
CLK MSR
1→HEADER
(ST3)
READ
FMT=Ø (ST4)
READ CHK, WT CHK, WT
FMT=1
CLK (DK4)
RKDA IS IN ADD SHIFT REG
ADD SHIFT REG ØØ→WT DATA
RD DATA≠WT DATA
RD DATA=WT DATA
LAST BIT=1
LAST BIT=Ø
CLK (DK4)
1→BAD BIT (ST4)
LAST BIT (ST3)
③ W4 AND W5 ARE JUMPERS. THE CONFIGURATION OF W4 AND W5 DETERMINES WHETHER OR NOT TO CHECK THE HEADER 16 TIMES.
1→HEADER OK (ST4)
Ø→BAD HEAD CNT (ST4)
Ø→RD HEADER (DK4)
W4 OUT, W5 IN
W4 IN, W5 OUT (ST4)
16 TIMES
~16 TIMES
③
CLK (DK4)
+1→BAD HEAD CNT (ST4)
Ø→MSR (ST4)
Ø→RD GATE (DK4)
BH
1→SKE (ST4)
ER
FD4
RF
FD4
WT, WT CHK
RD, RD CHK
IDLE
Ø→MSR (ST4)
Ø→RD GATE (DK4)
1→IDLE (ST3)
WT
WT CHK
W
FD5
WC
FD5
CLK (DK4)
DATA
CLK MSR
1→DATA
(ST3)
RRC
FD4
FD3
REVISIONS
CHK
CHANGE NO.
REV.
TITLE
RK11-D,E FUNCTION FLOWS
SCALE
SHEET
SIZE CODE
D FD
NUMBER
RK11-D-9
REV.
D FD RK11-D-9
694

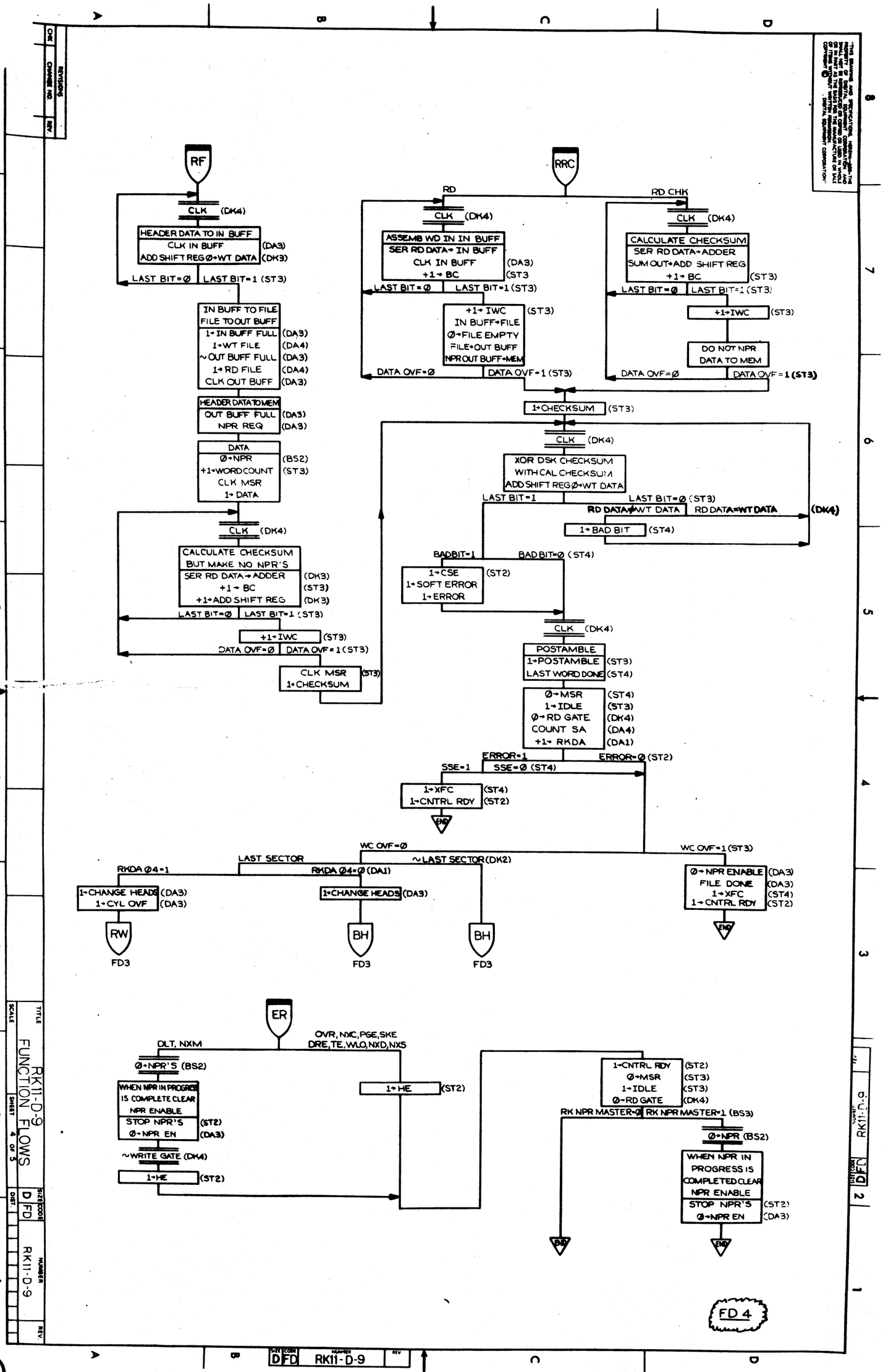
RF
CLK (DK4)
HEADER DATA TO IN BUFF
CLK IN BUFF (DA3)
ADD SHIFT REG Ø→WT DATA (DK3)
LAST BIT=Ø
LAST BIT=1 (ST3)
IN BUFF TO FILE
FILE TO OUT BUFF
1→IN BUFF FULL (DA3)
1→WT FILE (DA4)
~OUT BUFF FULL (DA3)
1→RD FILE (DA4)
CLK OUT BUFF (DA3)
HEADER DATA TO MEM
OUT BUFF FULL (DA3)
NPR REQ (DA3)
DATA
Ø→NPR (BS2)
+1→WORD COUNT (ST3)
CLK MSR
1→DATA
CLK (DK4)
CALCULATE CHECKSUM
BUT MAKE NO NPR'S
SER RD DATA→ADDER (DK3)
+1→BC (ST3)
+1→ADD SHIFT REG (DK3)
LAST BIT=Ø
LAST BIT=1 (ST3)
+1→IWC (ST3)
DATA OVF=Ø
DATA OVF=1 (ST3)
CLK MSR (ST3)
1→CHECKSUM
RRC
RD
RD CHK
CLK (DK4)
ASSEMB WD IN IN BUFF
SER RD DATA→IN BUFF
CLK IN BUFF (DA3)
+1→BC (ST3
LAST BIT=Ø
LAST BIT=1 (ST3)
+1→IWC (ST3)
IN BUFF→FILE
Ø→FILE EMPTY
FILE→OUT BUFF
NPR OUT BUFF→MEM
DATA OVF=Ø
DATA OVF=1 (ST3)
CALCULATE CHECKSUM
SER RD DATA→ADDER
SUM OUT→ADD SHIFT REG
+1→BC (ST3)
LAST BIT=Ø
LAST BIT=1 (ST3)
+1→IWC (ST3)
DO NOT NPR
DATA TO MEM
DATA OVF=Ø
DATA OVF=1 (ST3)
1→CHECKSUM (ST3)
CLK (DK4)
XOR DSK CHECKSUM
WITH CAL CHECKSUM
ADD SHIFT REG Ø→WT DATA
LAST BIT=1
LAST BIT=Ø (ST3)
RD DATA≠WT DATA
RD DATA=WT DATA (DK4)
1→BAD BIT (ST4)
BADBIT=1
BAD BIT=Ø (ST4)
1→CSE (ST2)
1→SOFT ERROR
1→ERROR
CLK (DK4)
POSTAMBLE
1→POSTAMBLE (ST3)
LAST WORD DONE (ST4)
Ø→MSR (ST4)
1→IDLE (ST3)
Ø→RD GATE (DK4)
COUNT SA (DA4)
+1→RKDA (DA1)
ERROR=1
ERROR=Ø (ST2)
SSE=1
SSE=Ø (ST4)
1→XFC (ST4)
1→CNTRL RDY (ST2)
END
WC OVF=Ø
WC OVF=1 (ST3)
LAST SECTOR
~LAST SECTOR (DK2)
RKDA Ø4=1
RKDA Ø4=Ø (DA1)
1→CHANGE HEADS (DA3)
1→CYL OVF (DA3)
1→CHANGE HEADS (DA3)
Ø→NPR ENABLE (DA3)
FILE DONE (DA3)
1→XFC (ST4)
1→CNTRL RDY (ST2)
END
RW
FD3
BH
FD3
BH
FD3
ER
DLT, NXM
OVR, NXC, PGE, SKE
DRE, TE, WLO, NXD, NXS
Ø→NPR'S (BS2)
WHEN NPR IN PROGRESS
IS COMPLETE CLEAR
NPR ENABLE
STOP NPR'S (ST2)
Ø→NPR EN (DA3)
~WRITE GATE (DK4)
1→HE (ST2)
1→HE (ST2)
1→CNTRL RDY (ST2)
Ø→MSR (ST3)
1→IDLE (ST3)
Ø→RD GATE (DK4)
RK NPR MASTER=Ø
RK NPR MASTER=1 (BS3)
Ø→NPR (BS2)
WHEN NPR IN
PROGRESS IS
COMPLETED CLEAR
NPR ENABLE
STOP NPR'S (ST2)
Ø→NPR EN (DA3)
END
FD 4
RK11-D-9
FUNCTION FLOWS
SHEET 4 OF 5
D FD
RK11-D-9

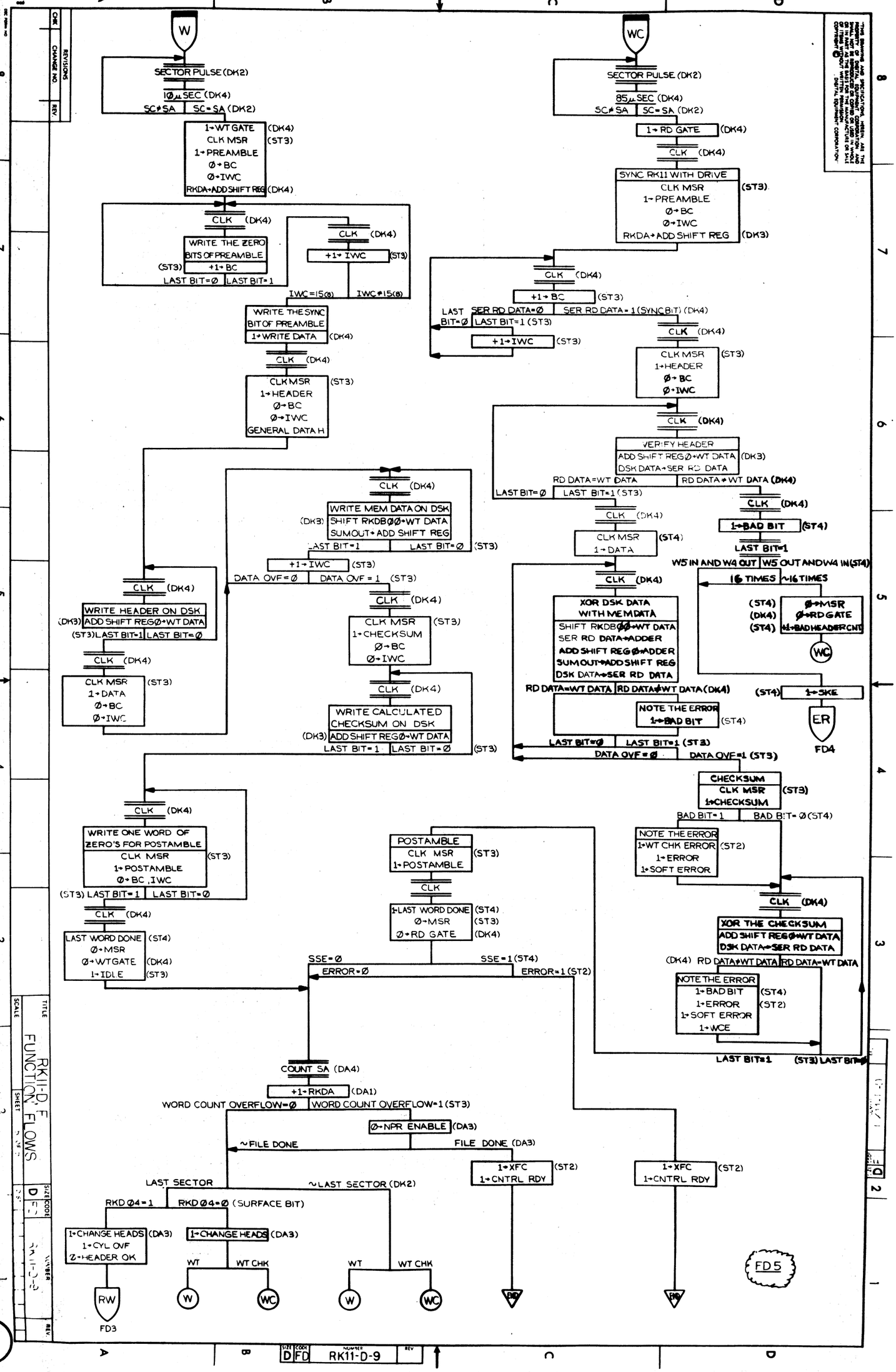
W
SECTOR PULSE (DK2)
10μ SEC (DK4)
SC≠SA
SC=SA (DK2)
1→WT GATE (DK4)
CLK MSR (ST3)
1→PREAMBLE
Ø→BC
Ø→IWC
RKDA→ADD SHIFT REG (DK4)
CLK (DK4)
WRITE THE ZERO BITS OF PREAMBLE
(ST3) +1→BC
LAST BIT=Ø
LAST BIT=1
CLK (DK4)
+1→IWC (ST3)
IWC=15(8)
IWC≠15(8)
WRITE THE SYNC BIT OF PREAMBLE
1→WRITE DATA (DK4)
CLK (DK4)
CLK MSR (ST3)
1→HEADER
Ø→BC
Ø→IWC
GENERAL DATA H
CLK (DK4)
WRITE MEM DATA ON DSK
(DK3) SHIFT RKDBØØ→WT DATA
SUMOUT→ADD SHIFT REG
LAST BIT=1
LAST BIT=Ø (ST3)
+1→IWC (ST3)
DATA OVF=Ø
DATA OVF=1 (ST3)
CLK (DK4)
CLK MSR (ST3)
1→CHECKSUM
Ø→BC
Ø→IWC
CLK (DK4)
WRITE CALCULATED CHECKSUM ON DSK
(DK3) ADD SHIFT REGØ→WT DATA
LAST BIT=1
LAST BIT=Ø (ST3)
CLK (DK4)
WRITE HEADER ON DSK
(DK3) ADD SHIFT REGØ→WT DATA
(ST3) LAST BIT=1
LAST BIT=Ø
CLK (DK4)
CLK MSR (ST3)
1→DATA
Ø→BC
Ø→IWC
CLK (DK4)
WRITE ONE WORD OF ZERO'S FOR POSTAMBLE
CLK MSR (ST3)
1→POSTAMBLE
Ø→BC, IWC
(ST3) LAST BIT=1
LAST BIT=Ø
CLK (DK4)
LAST WORD DONE (ST4)
Ø→MSR
Ø→WTGATE (DK4)
1→IDLE (ST3)
POSTAMBLE
CLK MSR (ST3)
1→POSTAMBLE
CLK
1→LAST WORD DONE (ST4)
Ø→MSR (ST3)
Ø→RD GATE (DK4)
SSE=Ø
SSE=1 (ST4)
ERROR=Ø
ERROR=1 (ST2)
COUNT SA (DA4)
+1→RKDA (DA1)
WORD COUNT OVERFLOW=Ø
WORD COUNT OVERFLOW=1 (ST3)
Ø→NPR ENABLE (DA3)
~FILE DONE
FILE DONE (DA3)
1→XFC (ST2)
1→CNTRL RDY
LAST SECTOR
~LAST SECTOR (DK2)
RKD Ø4=1
RKD Ø4=Ø (SURFACE BIT)
1→CHANGE HEADS (DA3)
1→CYL OVF
2→HEADER OK
1→CHANGE HEADS (DA3)
WT
WT CHK
WT
WT CHK
RW
FD3
W
WC
W
WC
WC
SECTOR PULSE (DK2)
85μ SEC (DK4)
SC≠SA
SC=SA (DK2)
1→RD GATE (DK4)
CLK (DK4)
SYNC RK11 WITH DRIVE
CLK MSR (ST3)
1→PREAMBLE
Ø→BC
Ø→IWC
RKDA→ADD SHIFT REG (DK3)
CLK (DK4)
+1→BC (ST3)
LAST BIT=Ø
SER RD DATA=Ø
LAST BIT=1 (ST3)
SER RD DATA=1 (SYNC BIT) (DK4)
+1→IWC (ST3)
CLK (DK4)
CLK MSR (ST3)
1→HEADER
Ø→BC
Ø→IWC
CLK (DK4)
VERIFY HEADER
ADD SHIFT REGØ→WT DATA (DK3)
DSK DATA→SER RD DATA
RD DATA=WT DATA
RD DATA≠WT DATA (DK4)
LAST BIT=Ø
LAST BIT=1 (ST3)
CLK (DK4)
1→BAD BIT (ST4)
LAST BIT=1
CLK (DK4)
CLK MSR (ST4)
1→DATA
W5 IN AND W4 OUT
W5 OUT AND W4 IN (ST4)
16 TIMES
~16 TIMES
(ST4) Ø→MSR
(DK4) Ø→RD GATE
(ST4) 4→BAD HEADER CNT
WC
CLK (DK4)
XOR DSK DATA WITH MEM DATA
SHIFT RKDBØØ→WT DATA
SER RD DATA→ADDER
ADD SHIFT REGØ→ADDER
SUMOUT→ADD SHIFT REG
DSK DATA→SER RD DATA
RD DATA=WT DATA
RD DATA≠WT DATA (DK4)
(ST4) 1→SKE
NOTE THE ERROR
1→BAD BIT (ST4)
ER
FD4
LAST BIT=Ø
LAST BIT=1 (ST3)
DATA OVF=Ø
DATA OVF=1 (ST3)
CHECKSUM
CLK MSR (ST3)
1→CHECKSUM
BAD BIT=1
BAD BIT=Ø (ST4)
NOTE THE ERROR
1→WT CHK ERROR (ST2)
1→ERROR
1→SOFT ERROR
CLK (DK4)
XOR THE CHECKSUM
ADD SHIFT REGØ→WT DATA
DSK DATA→SER RD DATA
(DK4) RD DATA≠WT DATA
RD DATA=WT DATA
NOTE THE ERROR
1→BAD BIT (ST4)
1→ERROR (ST2)
1→SOFT ERROR
1→WCE
LAST BIT=1
(ST3) LAST BIT
1→XFC (ST2)
1→CNTRL RDY
RW
FD5
TITLE
RK11-D F FUNCTION FLOWS
SCALE
SHEET
SIZE D
CODE FD
NUMBER
REV
CHK
CHANGE NO.
REVISIONS
RK11-D-9
70

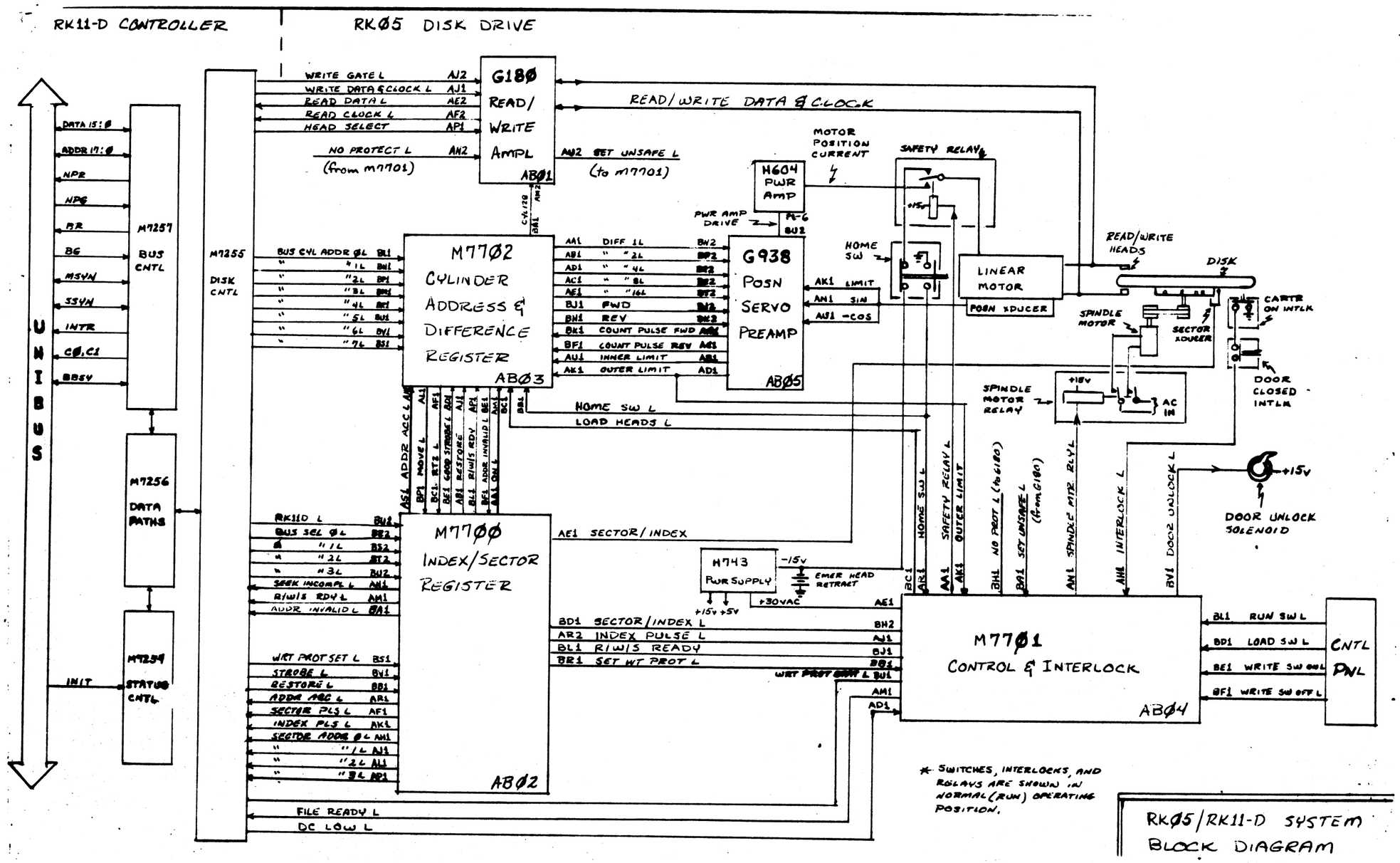

* SWITCHES, INTERLOCKS, AND RELAYS ARE SHOWN IN NORMAL (RUN) OPERATING POSITION.

RK05/RK11-D SYSTEM BLOCK DIAGRAM

"THIS DRAWING AND SPECIFICATIONS, HEREIN, ARE THE PROPERTY OF DIGITAL EQUIPMENT CORPORATION AND SHALL NOT BE REPRODUCED OR COPIED OR USED IN WHOLE OR IN PART AS THE BASIS FOR THE MANUFACTURE OR SALE OF ITEMS WITHOUT WRITTEN PERMISSION. COPYRIGHT © 1976, DIGITAL EQUIPMENT CORPORATION"

NOTE:

TERMINATOR OR DISK BUS CABLE CONNECTOR MAY BE INTERCHANGED BETWEEN SLOTS 7 AND 8

	1	2	3	4	5	6	7	8
	G180	M7680	M7681	M7701	G938-YA	M983	M930 *	M929
USAGE	1 2	1 2	1 2	1 2	1 2	1 2	1 2	1 2
	READ/ WRITE	INDEX & SECTOR	CYLINDER ADDRESS DIFFERENCE	CONTROL & INTERLOCK	POSITION SERVO PREAMP	CHASSIS CONNECTOR	TERMINATOR	DISK BUS CABLE CONNECTOR
		M7700 if OLD BOARD	M7702 if OLD BOARD		* See note on G938 schematic			

* IF MORE THAN ONE DRIVE IS USED, M930 IS REPLACED BY M929 (BC11A) M930 IS USED IN THE LAST DRIVE ON THE BUS

DESCRIPTION	DWG./PART NO.	ITEM NO.	
UNLESS OTHERWISE SPECIFIED DIMENSIONS ARE IN INCHES			
ANGLES ±0° 30'	CLASS OF ACCURACY (CHECK ONE)	NOMINAL DIMENSION RANGE INCHES: OVER 0 TO 0.2 / OVER 0.2 TO 1.2 / OVER 1.2 TO 4.0 / OVER 4.0 TO 12.0 / OVER 12.0 TO 48.0 / OVER 48.0 TO 96.0	
SURFACE QUALITY IN MICROINCHES	MEDIUM	±.004 / ±.008 / ±.012 / ±.016 / ±.024 / ±.04	
	PREFERRED	±.012 / ±.016 / ±.025 / ±.06 / ±.063 / ±0.1	

QUANTITY & VARIATION

THIRD ANGLE PROJECTION

REMOVE BURRS AND BREAK SHARP CORNERS

DO NOT SCALE DWG

MATERIAL

FINISH

DRN.		4/6/76
CHK'D	T. Hunter	18 MAY 76
ENG.		5/19/76
PROJ. ENG.		5/19/76
PROD.		5/26/76

NEXT HIGHER ASSY. 6-DD-RK05F-0

SCALE NONE

SHEET 1 OF 1

FIRST USED ON RK05F

digital

TITLE MODULE UTILIZATION

SIZE	CODE	NUMBER	REV.
C	MU	RK05F-0-2	

DIST.

REVISIONS: REV. / CHANGE NO. / CHK

MASTERFACE P-1193

DEC FORM NO. DRC 100-C

RK05F-0-2

72

NOTES:

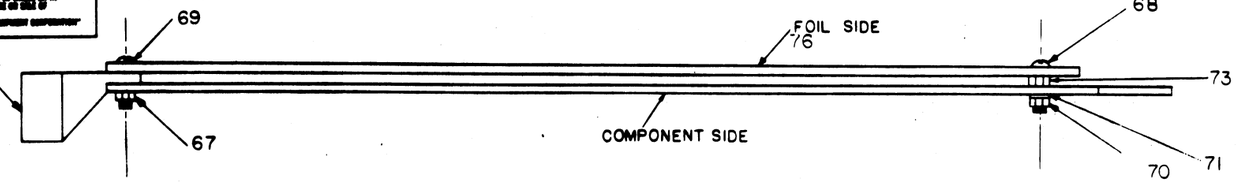

NOTE:
DO NOT INSERT → HANDLE HOLE EYELETS ON OUTSIDE HANDLE HOLES: (2 PLCS)

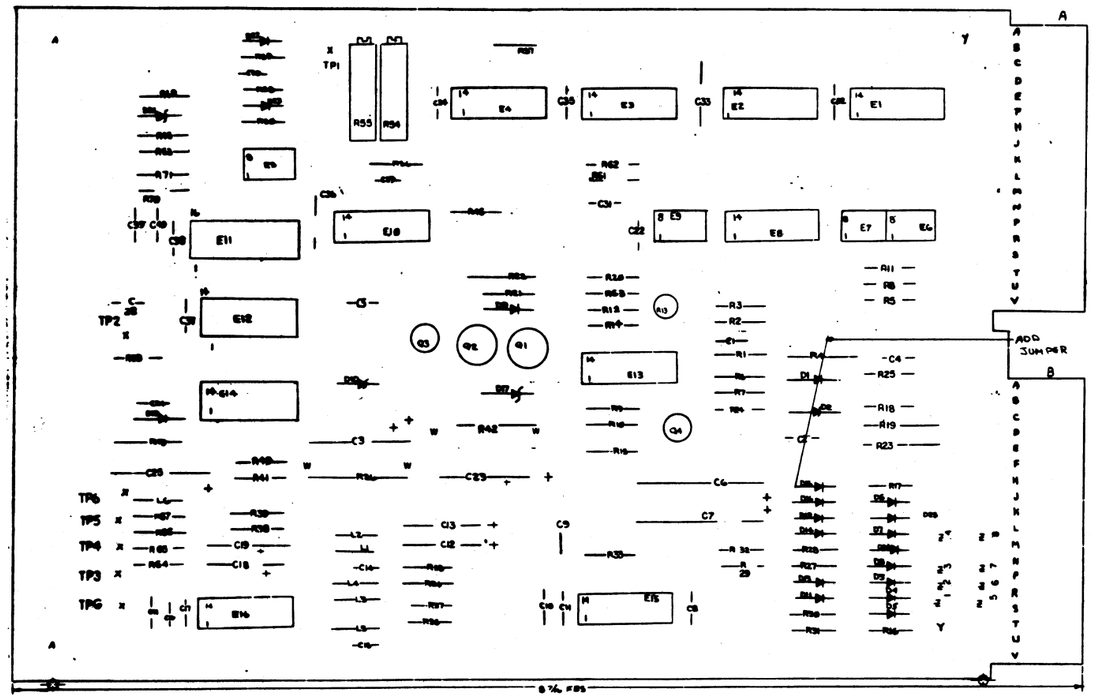

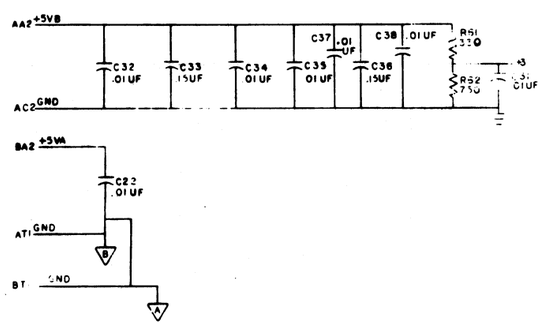

1	D26	DIODE IN748A (3.9V ZENER)	1100122	79
1	R69	RES. 180 1/4W 5%	1301322	78
2	R7,R10	RES. 100 1/4W 5%	1300229	77
1		NOISE SHIELD	5009893	76
2		HANDLE, FLIP CHIP-GREEN	9008337-01	75
7	TPG, TP1 THRU TP6	SWAGE LUG	9007791	74
2		HEX NUT, NYLON, #2-56	9007263	73
2		EYELET #GS4-7	9006732	72
2		INTERNAL LOCK WASHER #2-56	9006621	71
2		HEX NUT #2-56	9006555	70
2		SCREW 4/40 X 3/8	9006011-4	69
2		SCREW PAN HD #2-56 X 5/16	9006003-1	68
2		KEP NUT 4/40	9006557	67

3	E6	I.C. DEC 7545	1910645	66
2	E15,16	I.C. DEC 733	1910644	65
1	E14	I.C. DEC 1414	1910337	64
1	E5	I.C. DEC 741	1910298	63
1	E1	I.C. DEC 8891	1909705	62
2	E2,E8	I.C. DEC 8640	1911469	61
1	E10	I.C. DEC 9601	1909373	60
1	E13	I.C. DEC 7472	1905580	59
2	E4,E12	I.C. DEC 7400	905575	58
1	E3	I.C. DEC 7474	1905547	57
1	L6	INDUCTOR 120UH	1610663	56
2	L1,L2	INDUCTOR 56UH	1610661	55
3	L3,L4,L5	INDUCTOR 100UH	610662	54
1	Q3	TRANSISTOR DEC 6534C	1503409-02	53
1	Q4	TRANSISTOR DEC 3009B	1503100	52
2	Q1,Q2	TRANSISTOR 2N2904	1501742	51
				50
1	R13	POT 1K 1/2W 20% 62PR	1309150-03	49
2	R54,55	POT 10K 3/4W 10% 76PR	1309143-10	48
2	R16,R17	RES. 27K 1/4W 5%	1305346	47
2	R27,R28	RES. 8.2K 1/4W 5%	1303179	46
1	R60	RES. 220K 1/4W 5%	1302092	45
1	R4	RES. 270 1/4W 5%	1300285	44
2	R40,R41	RES. 560 1/4W 5%	1301890	43
6	R6,9,45,53,70,71	RES. 5.6K 1/4W 5%	1301874	42
1	R11	RES. 1.1K 1/4W 5%	1301475	41
1	R59	RES. 3.3K 1/4W 5%	1300439	40
1	R62	RES. 750 1/4W 5%	1301401	39
2	R15,R21	RES. 1.2K 1/4W 5%	1301320	38
2	R30,R31	RES. 15K 1/4W 5%	1300496	37
6	R5,8,18,38,39,57	RES. 10K 1/4W 5%	1300479	36
1	R59	RES. 4.7K 1/4W 5%	1300447	35
1	E11	I.C. DEC 74123	1910430	34
16	R1,R2,R3,R20,R34-37 R46,R56,R63-68	RES. 1K 1/4W 5%	1300365	33
2	R24,R12	RES. 470 1/4W 5%	1300316	31
1	R43	RES. 470 1/2W 5%	1300315	30
3	R22,R25,R61	RES. 330 1/4W 5%	1300295	29
2	R29,R32	RES. 220 1/4 5%	1300271	28
2	R26,R42	RES. 180 1W 5%	1300262	27
1	R19	RES. 180 1/2W 5%	1300260	26
1	R14	RES. 150 1/4W 5%	1300250	25
1	R23	RES. 150 1/2W 5%	1300249	24
1	R33	RES. 68 1/4W 5%	1300219	23
8	1-8	GOLD WIREWRAP PINS	9009217	22
18	D1,D3-9,D11-16,D22-25	DIODE D672	1105275	21
1	D2	DIODE IN 751A (5.1V ZENER)	1110994	20
				19
3	D10,D17,D18	DIODE IN 753A (6.2V ZENER)	1102421	18
13	C9,C33,C36	CAP 15UF 50V 10% TCAWBO	1010031	17
1	C16	~~CAP 10PF 100V 5% CER~~	~~1000000~~	~~16~~
4	C12,C13,C18,C19	CAP .01 UF 50V AXIAL	1001610-00	15
14	C4,10,11,16,17,22 2-29 31 32,34,35,37,39	CAP .01UF 100V 20% DISC	1001610-01	14
2	C6,C7	CAP 10UF 35V 20% S TANT	1000069	13
3	C3,C23,C25	CAP 6.8UF 35V 20% S. TANT	1000067	12
1	C2	CAP 680PF 100V 5% D.M.	1000026	11
2	C5,C30	CAP 470PF 100V 5% D.M.	1000024	10
1	C29	CAP 150PF 100V 5% DM	1000019	9
1	C41	CAP 27PF 100V 5% D.M.	1001739	8
1	C14	CAP 56PF 100V 5% D.M.	1000012	7
3	C1,C39,C40	CAP 47PF 100V 5% D.M.	1000011	6
2	C8,C15	CAP 18 PF 100V 5% D.M.	1002608	5
		ETCHED CIRCUIT BOARD	5009743	4
		MODULE ECO HISTORY	B-MM-G180-0-6	3
		ASSY DRILLING HOLE LAYOUT	E-AM-G180-0-5	2
		KEY COORDINATE HOLE LOCATION	K-CO-G180-0-4	1
QTY	REF. DESIGNATION	DESCRIPTION	PART NO.	ITEM NO.

PARTS LIST

ETCH BOARD REV. L

		IN746A	SAME
2N2904	2N2118A	IN751A	SAME
DEC 3009B	2N3009	IN751A	SAME
DEC 6534C	MPS6534	D672	IN4153
DEC NO.	EIA NO.	DEC NO.	EIA NO.

SEMICONDUCTOR CONVERSION CHART

DEC 8640	1 / 8
DEC 7452	4 / 8
IC TYPE	GND / +5V

GND AND 5V ARE USUALLY PIN 7 AND 14 RESPECTIVELY EXCEPTIONS ARE STATED ABOVE

IC PIN LOCATIONS

REV.	CHANGE NO.	CHK.
N	G180-00006	K
M	G180-00009	
L	00028	
N	G180-0001D	

REVISIONS

DRN. R. DOUCETTE 10-22-71
CHK'D. NANCY MOORE 11-10-71
ENG. DALE JENSEN 11-22-71
PROJ. ENG. A. KAMINSKI 1-28-72
PROD.
NEXT HIGHER ASSY
SCALE
SHEET 1 OF 2

digital

TITLE DEC PACK READY WRITE

SIZE D CODE C NUMBER G180-0-1 REV. N

DIST.

73

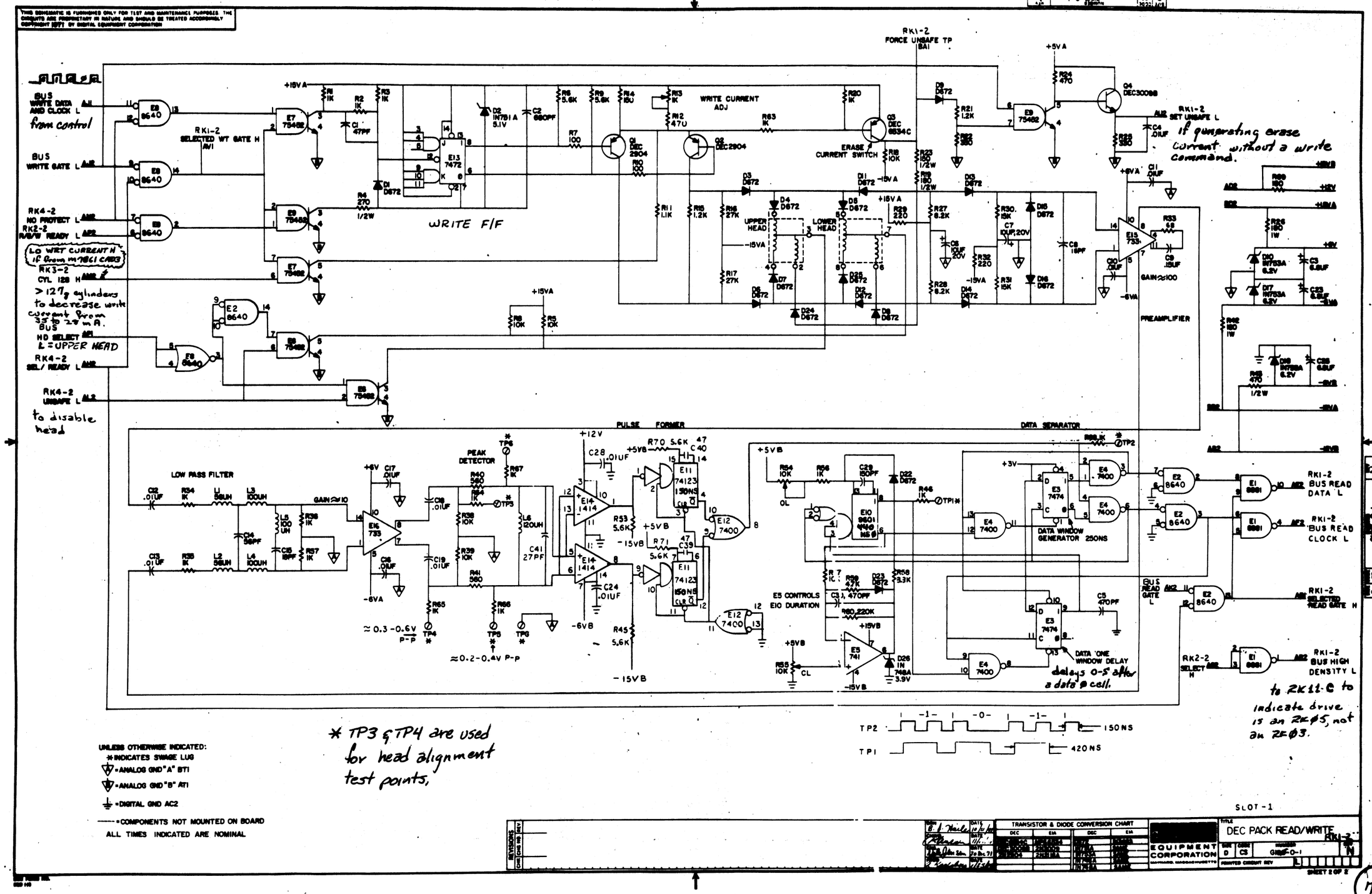
BUS WRITE DATA AND CLOCK L
from control
BUS WRITE GATE L
RK4-2 NO PROTECT L
RK2-2 R/W READY L
LO WRT CURRENT H if from M7861 CARD
RK3-2 CYL 128 H
> 127 cylinders to decrease write current from 35 to 29 mA.
BUS HD SELECT
L = UPPER HEAD
RK4-2 SEL/ READY L
RK4-2 UNSAFE L
to disable head
RK1-2 SELECTED WT GATE H
WRITE F/F
WRITE CURRENT ADJ
ERASE CURRENT SWITCH
UPPER HEAD
LOWER HEAD
RK1-2 FORCE UNSAFE TP
RK1-2 SET UNSAFE L
if generating erase current without a write command.
PREAMPLIFIER
GAIN ≈ 100
LOW PASS FILTER
PEAK DETECTOR
PULSE FORMER
DATA SEPARATOR
E5 CONTROLS E10 DURATION
DATA WINDOW GENERATOR 250NS
DATA ONE WINDOW DELAY
delays 0-5 after a data 0 cell.
RK1-2 BUS READ DATA L
RK1-2 BUS READ CLOCK L
RK1-2 SELECTED READ GATE H
RK1-2 BUS HIGH DENSITY L
RK2-2 SELECT H
to RK11-C to indicate drive is an RK05, not an RK03.
TP2
TP1
150NS
420NS
* TP3 & TP4 are used for head alignment test points.
UNLESS OTHERWISE INDICATED:
* INDICATES SWAGE LUG
= ANALOG GND "A" BT1
= ANALOG GND "B" AT1
= DIGITAL GND AC2
= COMPONENTS NOT MOUNTED ON BOARD
ALL TIMES INDICATED ARE NOMINAL
SLOT-1
TRANSISTOR & DIODE CONVERSION CHART
DEC
EIA
EQUIPMENT CORPORATION
DEC PACK READ/WRITE
RK1-2
SHEET 2 OF 2

74

CIRCUITS ARE PROPRIETARY IN NATURE AND SHOULD BE TREATED ACCORDINGLY
COPYRIGHT 1971 BY DIGITAL EQUIPMENT CORPORATION

NOTES:

1. ITEM #23 CAN BE REPLACED BY A DEC 6534C(1503409-02) TRANSISTOR IF NEEDED

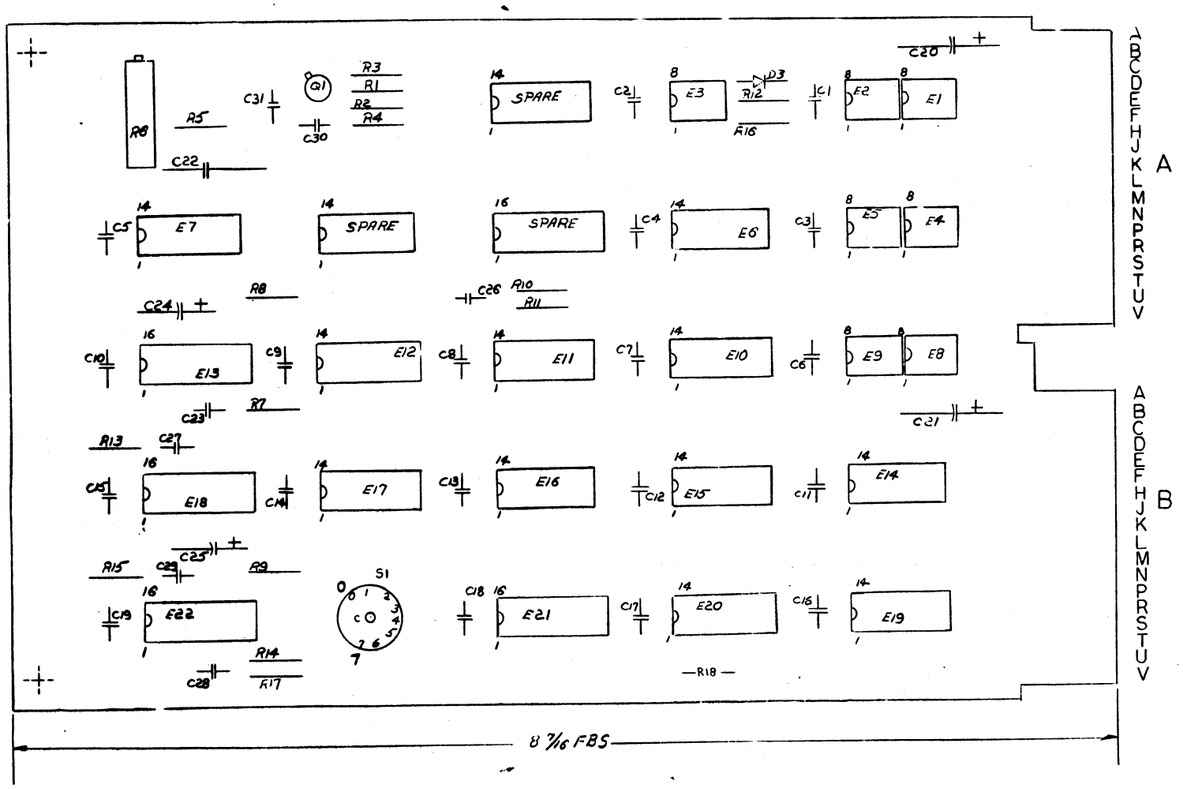

NOTES:

PIN 7 = GND, PIN 14 = +5V ON E2, E3, E7, E11, E13, E14, E17, E20, E21, E23

PIN 4 = GND, PIN 8 = +5V ON E1, E5, E4, E9, E10, E8, E16

PIN 10 = GND, PIN 5 = +5V ON E6, E12

PIN 1 = GND, PIN 8 = +5V ON E22

PIN 8 = GND, PIN 16 = +5V ON E6, E8, E19

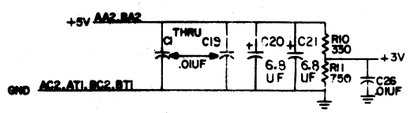

QTY	REF. DESIGNATION	DESCRIPTION	DEC PART NO.	
2	C20,21	CAP. 6.8UF 35V 20%	1000067	40
1	R2	RESISTOR 4.7K ¼W 5%	1300447	39
1	C22	CAP. .01UF 100V 10% MYLAR	1005784	38
				37
2		HANDLE, FLIP CHIP - MAGENTA	9008337-06	36
4		EYELET	9006732	35
1	E20	I.C. DEC 7401	1909990	34
3	E13,18,22	I.C. DEC 74123	1910636	33
7	E1-3, E8,E9	I.C. DEC 75452	1910648	32
1	E7	I.C. DEC 74121	1910230	31
1	E21	I.C. DEC 74145	1910047	30
1	E14	I.C. DEC 7404	1909686	29
2	E15, 19	I.C. DEC 8640	1911499	28
2	E6, 11	I.C. DEC 7493	1909924	27
1	E10	I.C. DEC 7410	1905576	26
2	E12,16	I.C. DEC 7400	1905575	25
1	E17	I.C. DEC 7474	1905547	24
1	Q1 SEE NOTE 1	TRANSISTOR DEC 3639C	1502748-01	23
1	R13	RES. 18K ¼W 5%	1302465	22
3	R14, 15,8	RES. 30K ¼W 5%	1302394	21
1	R6	POT. 10K 3/4W 10%	1309143-10	20
7	R9	RES. 22K ¼W 5%	1301808	19
1	R11	RES. 750 ¼W 5%	1301401	18
3	R3,R7, R18	RES. 10K ¼W 5%	1308479	17
2	R4, 10	RES. 330 ¼W 5%	1300295	16
1	R12	RES. 150 ¼W 5%	1300250	15
1	R1	RES. 100 ¼W 5%	1300229	14
1	S1	SWITCH ROTARY 8 POS	1210043	13
1	D3	DIODE AZ5 (2.4)	1101938	12
3	R5,16,17	RES 1K 1/4W 5%	1300345	11
1	C24	CAP. .15UF 35V 20% S.TANT	1002180	10
1	C25	CAP. 1.0UF 35V 10% S.TANT	1001776	9
21	C1 thru C19, C26,C31	CAP. .01UF 100V 20% DISC	1001610	8
1	C29	CAP. 470PF 100V 5% D.M.	1000024	7
2	C23,C30	CAP. 330PF 100V 5% D.M.	1000023	6
2	C28, 27	CAP. 100PF 100V 5% D.M.	1000016	5
1		ETCHED CIRCUIT BOARD	5009716	4
		MODULE ECO HISTORY	B-MM-M7708-0-6	3
		ASSY/DRILLING HOLE LAYOUT	E-AM-M7700-0-5	2
		X-Y COORDINATE HOLE LOCATION	X-CO-M7700-0-4	1

PARTS LIST

TRANSISTOR & DIODE CONVERSION CHART

DEC	EIA	DEC	EIA
[illegible]	[illegible]		

REVISIONS

EQUIPMENT CORPORATION MAYNARD MASSACHUSETTS

TITLE DEC PAK INDEX AND SECTOR

RK2-1

SIZE D CODE CS NUMBER M7700-0-1 REV K

PRINTED CIRCUIT REV

SHEET 1 OF 2

75

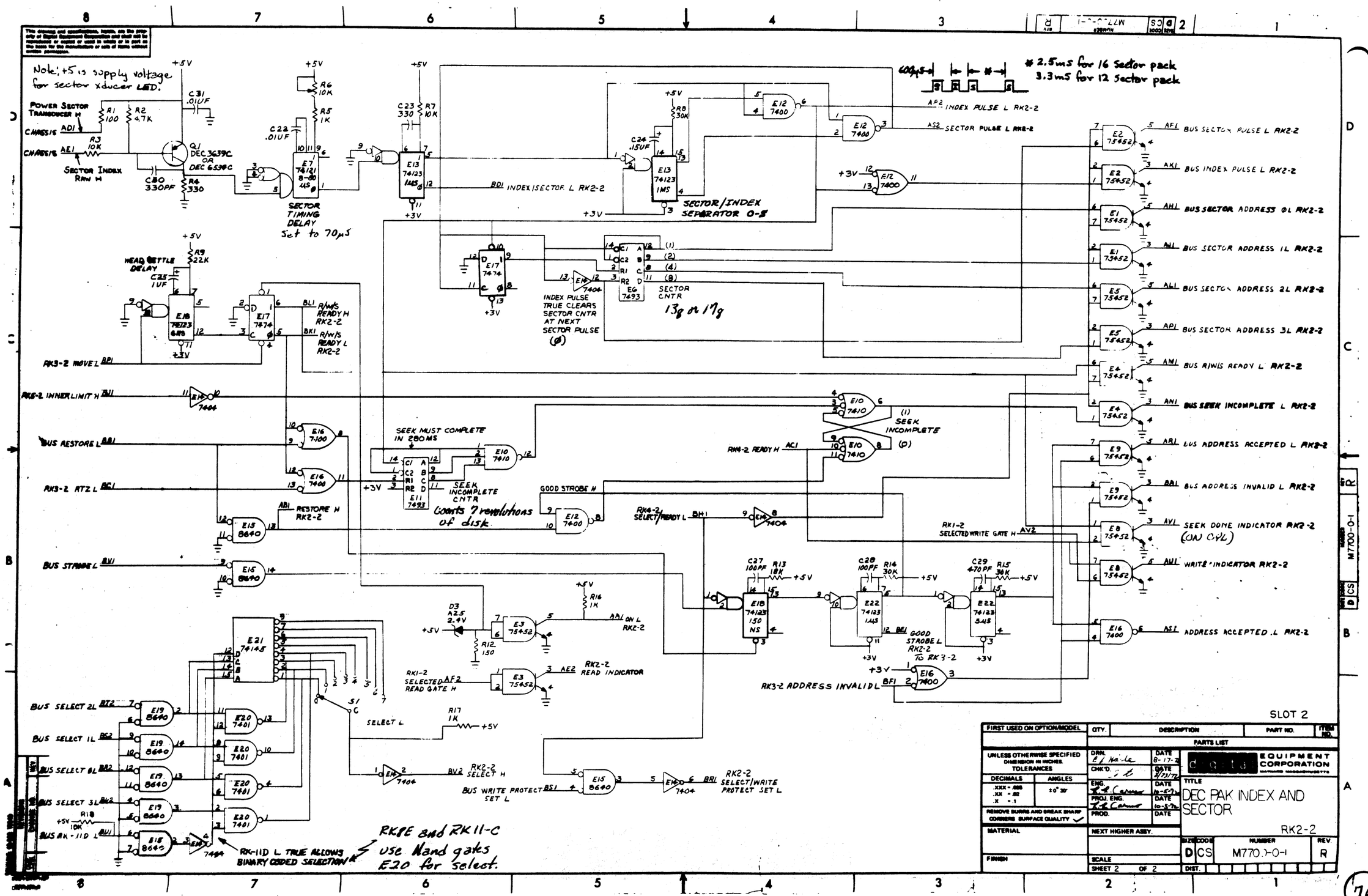
Note: +5 is supply voltage for sector xducer LED.
POWER SECTOR TRANSDUCER H
CHASSIS
SECTOR INDEX RAW H
SECTOR TIMING DELAY Set to 70µS
HEAD SETTLE DELAY
SECTOR/INDEX SEPARATOR 0-8
INDEX PULSE TRUE CLEARS SECTOR CNTR AT NEXT SECTOR PULSE (Ø)
SECTOR CNTR
13g or 17g
2.5mS for 16 Sector pack
3.3mS for 12 Sector pack
INDEX PULSE L RK2-2
SECTOR PULSE L RK2-2
BUS SECTOR PULSE L RK2-2
BUS INDEX PULSE L RK2-2
BUS SECTOR ADDRESS ØL RK2-2
BUS SECTOR ADDRESS 1L RK2-2
BUS SECTOR ADDRESS 2L RK2-2
BUS SECTOR ADDRESS 3L RK2-2
BUS R/W/S READY L RK2-2
BUS SEEK INCOMPLETE L RK2-2
BUS ADDRESS ACCEPTED L RK2-2
BUS ADDRESS INVALID L RK2-2
SEEK DONE INDICATOR RK2-2 (ON CYL)
WRITE INDICATOR RK2-2
ADDRESS ACCEPTED L RK2-2
RK3-2 MOVE L
RK5-2 INNER LIMIT H
BUS RESTORE L
RK3-2 RTZ L
BUS STROBE L
R/W/S READY H RK2-2
R/W/S READY L RK2-2
RESTORE H RK2-2
SEEK MUST COMPLETE IN 280MS
SEEK INCOMPLETE CNTR
Counts 7 revolutions of disk.
GOOD STROBE H
RK4-2 READY H
SEEK INCOMPLETE
RK4-2 SELECT/READY L
RK1-2 SELECTED WRITE GATE H
GOOD STROBE L RK2-2 TO RK3-2
RK3-2 ADDRESS INVALID L
ON L RK2-2
RK2-2 READ INDICATOR
RK1-2 SELECTED READ GATE H
SELECT L
RK2-2 SELECT H
BUS WRITE PROTECT SET L
RK2-2 SELECT/WRITE PROTECT SET L
BUS SELECT 2L
BUS SELECT 1L
BUS SELECT ØL
BUS SELECT 3L
BUS RK-11D L
RK-11D L TRUE ALLOWS BINARY CODED SELECTION
RK8E and RK11-C use Nand gates E20 for select.
SLOT 2
FIRST USED ON OPTION/MODEL
QTY.
DESCRIPTION
PART NO.
ITEM NO.
PARTS LIST
UNLESS OTHERWISE SPECIFIED DIMENSION IN INCHES. TOLERANCES
DECIMALS
ANGLES
REMOVE BURRS AND BREAK SHARP CORNERS SURFACE QUALITY
MATERIAL
FINISH
DRN. E. Neile
DATE 8-17-72
CHK'D.
ENG. K. Cramer
PROJ. ENG. K. Cramer
PROD.
NEXT HIGHER ASSY.
SCALE
SHEET 2 OF 2
digital EQUIPMENT CORPORATION
TITLE
DEC PAK INDEX AND SECTOR
RK2-2
SIZE D
CODE CS
NUMBER M7700-0-1
REV. R
DIST.
M7700-0-1
76

This drawing and specifications, herein, are the property of Digital Equipment Corporation and shall not be reproduced or copied or used in whole or in part as the basis for the manufacture or sale of items without written permission.

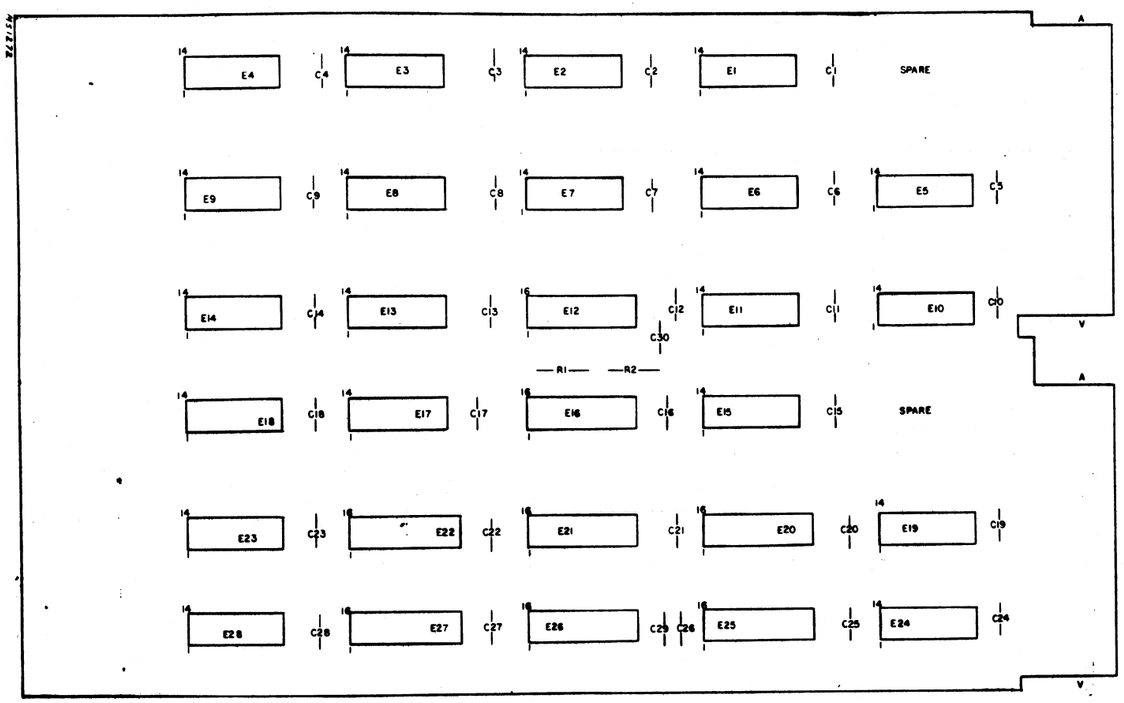

UNLESS OTHERWISE INDICATED:
PIN 8 = +5V DEC 380
PIN 1 = GND
PIN 5 = +5V DEC 7483
PIN12 = GND
PIN16 = +5V DEC 74175
PIN8 = GND
PIN16 = +5V DEC 74193
PIN8 = GND
PIN14 = +5V ALL OTHER IC'S
PIN 7 = GND

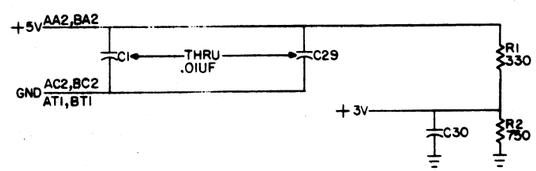

QTY	REF DESIGNATION	DESCRIPTION	PART NO.	ITEM NO.
4		HYBLET [illegible]-7	[illegible]	[illegible]
2		HANDLE, FLIP GRIP - MAGENTA	[illegible]	[illegible]
2	E20, E25	I.C. DEC 74175	[illegible]	[illegible]
2	E5, E17	I.C. DEC 7437	[illegible]	[illegible]
2	E19, E24	I.C. DEC 380	[illegible]	[illegible]
2	E12, E16	I.C. DEC 74193	[illegible]	[illegible]
2	E23, E28	I.C. DEC 7486	[illegible]	[illegible]
4	E21, E22, E26, E27	I.C. DEC 7483	[illegible]	[illegible]
2	E7, E11	I.C. DEC 7404	[illegible]	[illegible]
1	E2	I.C. DEC 7402	[illegible]	[illegible]
1	E14	I.C. DEC 7400	[illegible]	[illegible]
2	E15, E18	I.C. DEC 7410	[illegible]	[illegible]
4	E8, E6, E10, E13	I.C. DEC 7408	[illegible]	[illegible]
4	E3, E4, E9, E1	I.C. DEC 7474	[illegible]	9
1	R2	RES. 750 ¼W 5%	[illegible]	8
1	R1	RES. 330 ¼W 5%	[illegible]	7
		GRIPLET	[illegible]-0	6
30	C1 - C30	CAP. .01UF 100V 20% DISC	[illegible]	5
1		ETCHED CIRCUIT BOARD	5009710	4
		MODULE ECO HISTORY	[illegible]-M7702-0-6	3
		ASM/DRILLING HOLE LAYOUT	[illegible]-M7702-0-5	2
		X-Y COORDINATE HOLE LOCATION	[illegible]-M7702-0-4	1

PARTS LIST

ETCH BOARD REV C

DEC NO.	EIA NO.	DEC NO.	EIA NO.

SEMICONDUCTOR CONVERSION CHART

REV	CHANGE NO.	CHK
C	M7702-00001	

REVISIONS

DWN. D. JENSEN 5/20/73
CHK'D 5/24/73
ENG. 12-16-71
MFG. ENG. 12-16-71
PROD. 12-16-71

NEXT HIGHER ASSY

SCALE

SHEET 1 OF 2

DIGITAL EQUIPMENT CORPORATION MAYNARD, MASSACHUSETTS

TITLE DEC PACK CYL ADDR AND DIFF

RK3-1

SIZE D CODE CS NUMBER M7702-0-1 REV. C

DIST.

DEC FORM NO. DRD-135

77

This drawing and specifications, herein, are the property of Digital Equipment Corporation and shall not be reproduced or copied or used in whole or in part as the basis for manufacture or sale of items without written permission.

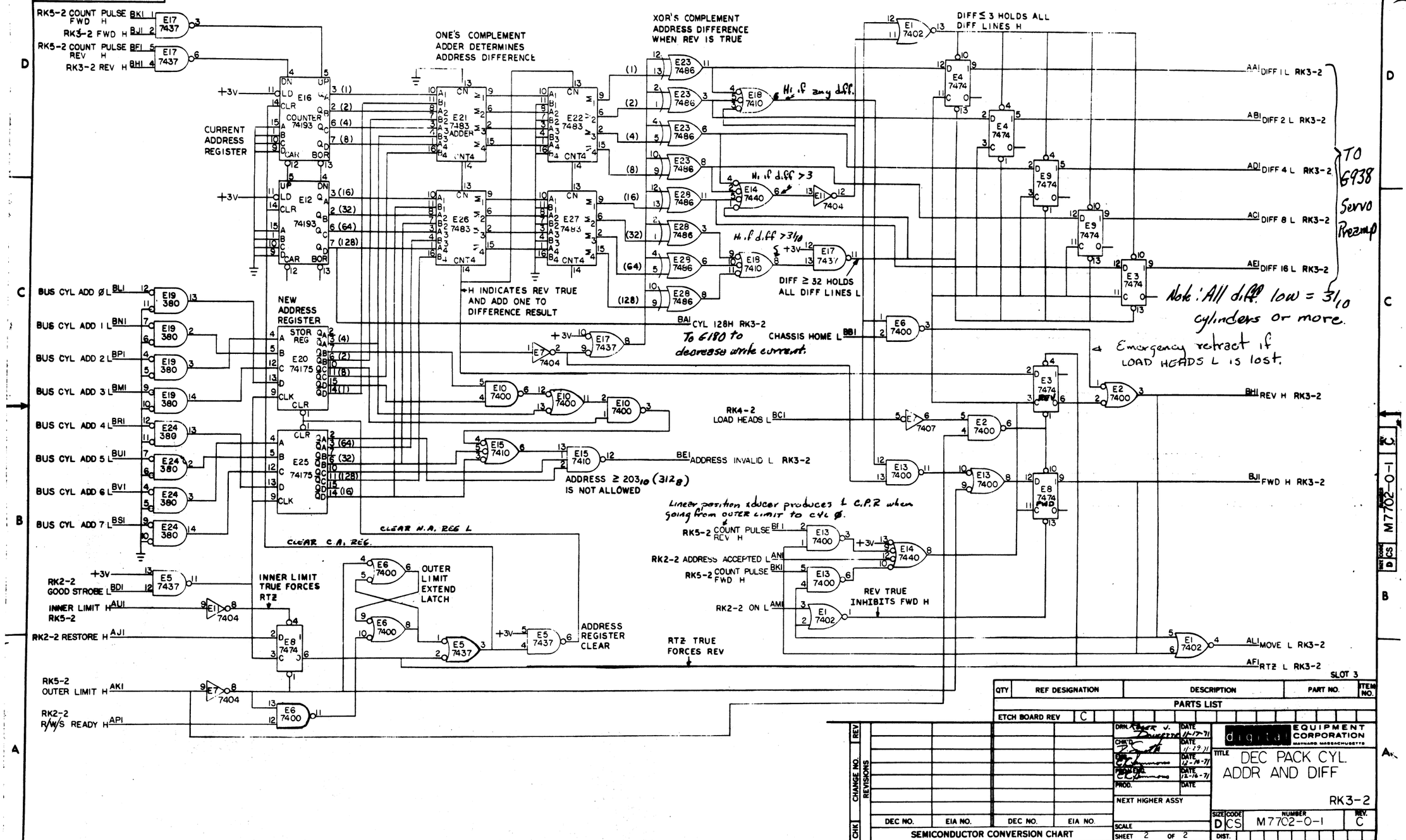

QTY	REF DESIGNATION	DESCRIPTION	PART NO.	ITEM NO.
		PARTS LIST		

ETCH BOARD REV C

CHANGE NO.	REVISIONS	REV

DEC NO.	EIA NO.	DEC NO.	EIA NO.

SEMICONDUCTOR CONVERSION CHART

DRN. Peter J. Bonesteel DATE 11-17-71
CHK'D. P. Smith DATE 11-29-71
ENG. C. Simmons DATE 12-16-71
PROM ENG. C. Simmons DATE 12-16-71
PROD. DATE
NEXT HIGHER ASSY
SCALE
SHEET 2 OF 2

digital EQUIPMENT CORPORATION MAYNARD, MASSACHUSETTS

TITLE DEC PACK CYL. ADDR AND DIFF

RK3-2

SIZE D CODE CS NUMBER M7702-0-1 REV. C

DIST.

DEC FORM NO. DRD-135

78

"THIS DRAWING AND SPECIFICATIONS, HEREIN, ARE THE PROPERTY OF DIGITAL EQUIPMENT CORPORATION AND SHALL NOT BE REPRODUCED OR COPIED OR USED IN WHOLE OR IN PART AS THE BASIS FOR THE MANUFACTURE OR SALE OF ITEMS WITHOUT WRITTEN PERMISSION. COPYRIGHT © 1976, DIGITAL EQUIPMENT CORPORATION"

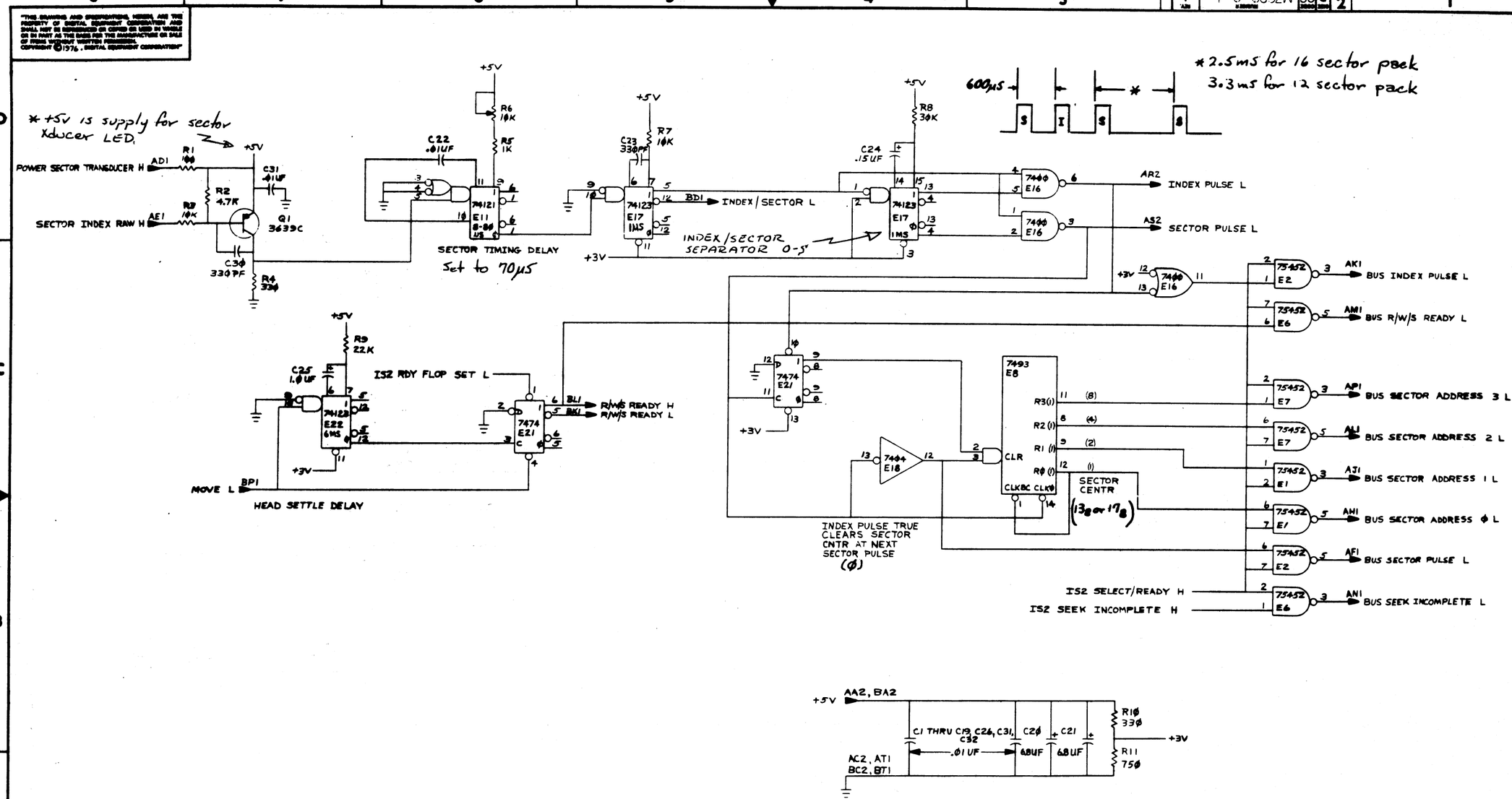

DRN.	22 JAN 76	FIRST USED ON	10-10-1
CHK'D	3 FEB 76	TITLE	(IS1) DEC PAK INDEX AND SECTOR
ENG.			
PROJ. ENG.			
PROD.	23 FEB 76		
NEXT HIGHER ASSY.			
D-UA-M7680-0-0		SIZE D	CODE CS
SCALE		NUMBER M7680-0-1	REV. A
SHEET 1 OF 2		DIST.	

"THIS DRAWING AND SPECIFICATIONS, HEREIN, ARE THE PROPERTY OF DIGITAL EQUIPMENT CORPORATION AND SHALL NOT BE REPRODUCED OR COPIED OR USED IN WHOLE OR IN PART AS THE BASIS FOR THE MANUFACTURE OR SALE OF ITEMS WITHOUT WRITTEN PERMISSION. COPYRIGHT © 1976 DIGITAL EQUIPMENT CORPORATION"

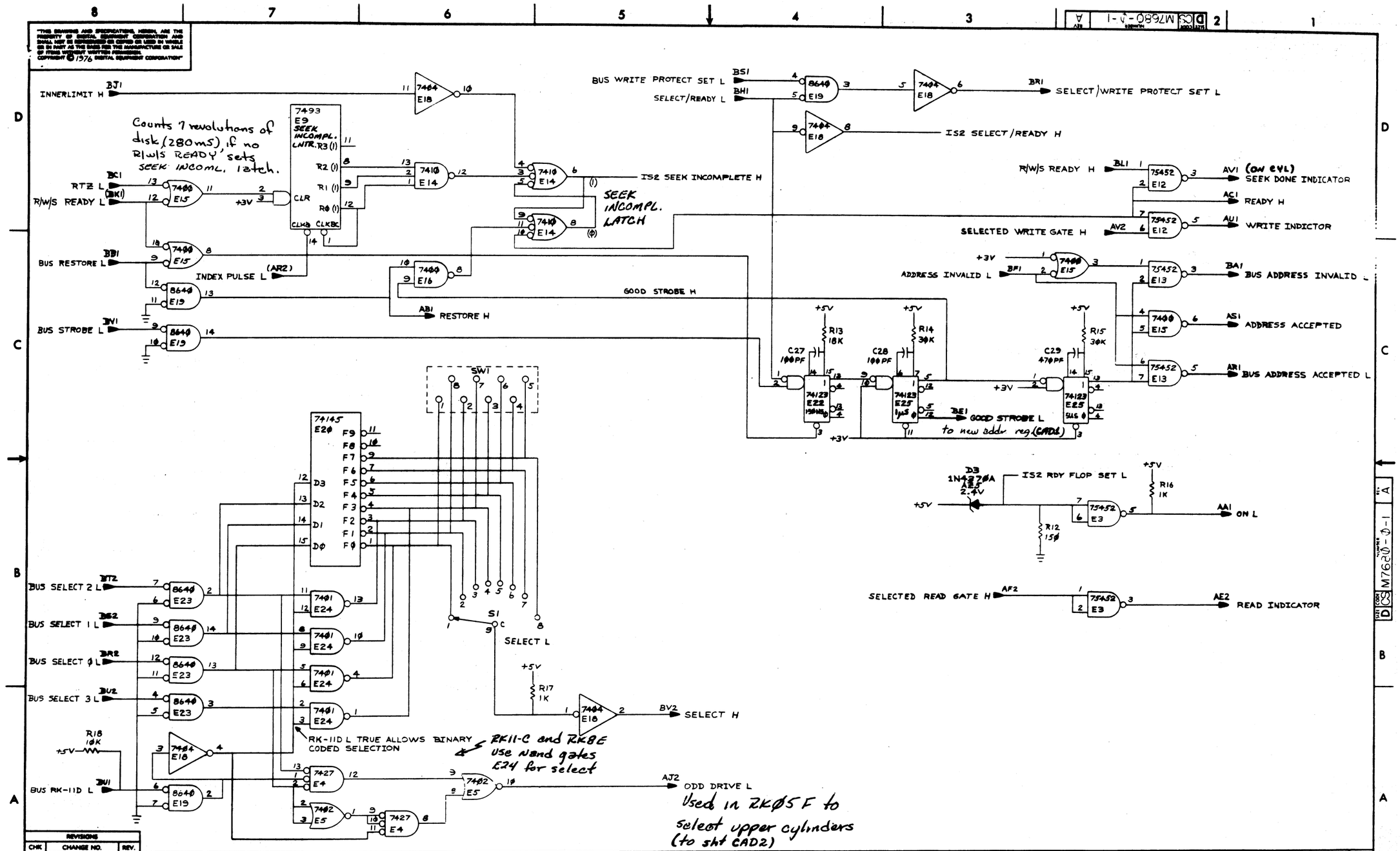

REVISIONS		
CHK	CHANGE NO.	REV.

TITLE	SIZE	CODE	NUMBER	REV.
DEC PAK INDEX AND SECTOR (IS2)	D	CS	M7680-0-1	A
SCALE	SHEET 2 OF 2	DIST.		

DEC FORM NO. DRD 139

80

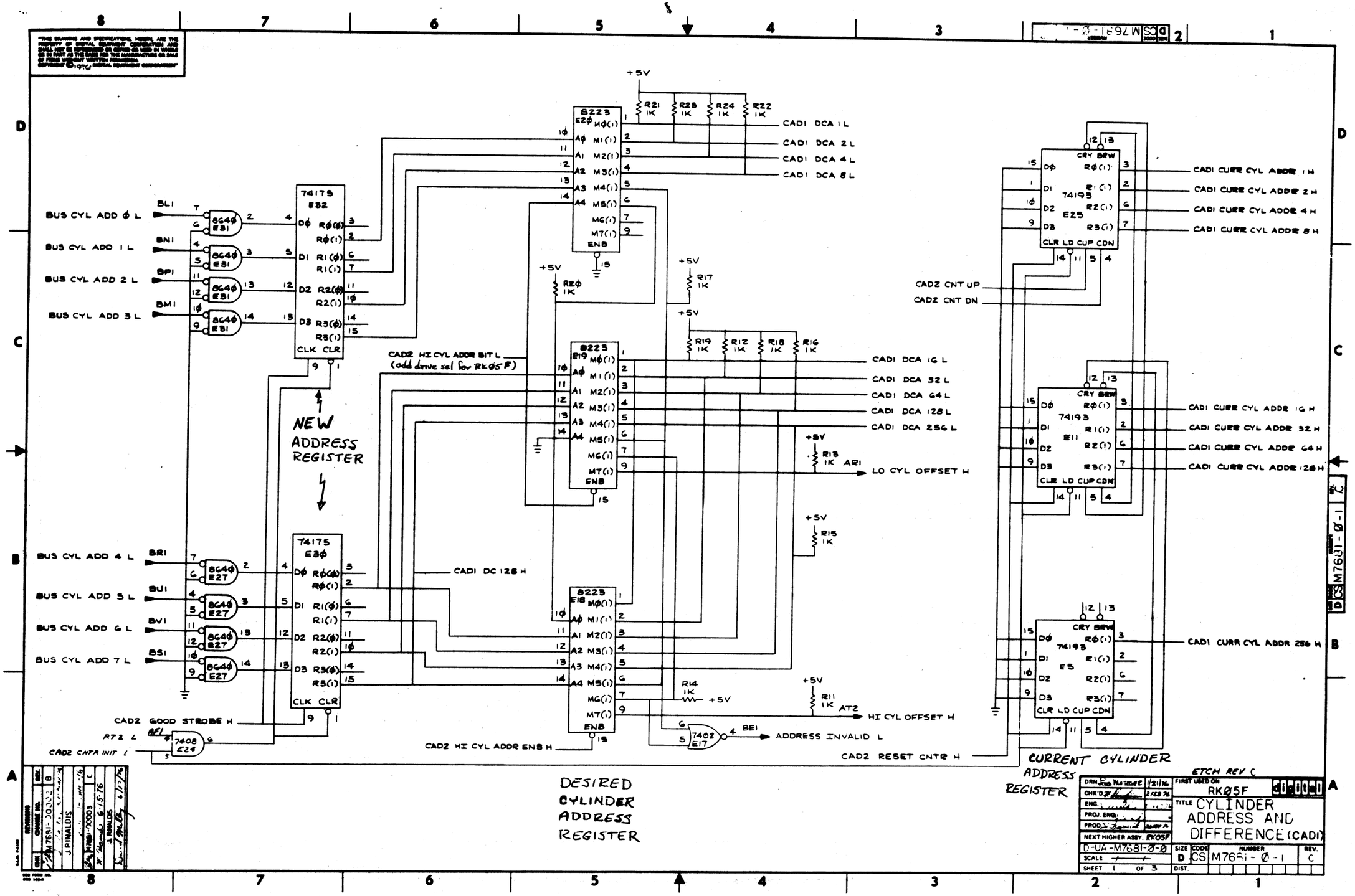
BUS CYL ADD Ø L
BUS CYL ADD 1 L
BUS CYL ADD 2 L
BUS CYL ADD 3 L
BUS CYL ADD 4 L
BUS CYL ADD 5 L
BUS CYL ADD 6 L
BUS CYL ADD 7 L
8G4Ø E31
8G4Ø E27
74175 E32
74175 E3Ø
8223 E2Ø
8223 E19
8223 E18
R21 1K
R23 1K
R24 1K
R22 1K
CAD1 DCA 1 L
CAD1 DCA 2 L
CAD1 DCA 4 L
CAD1 DCA 8 L
R2Ø 1K
R17 1K
R19 1K
R12 1K
R18 1K
R16 1K
CAD1 DCA 16 L
CAD1 DCA 32 L
CAD1 DCA 64 L
CAD1 DCA 128 L
CAD1 DCA 256 L
CAD2 HI CYL ADDR BIT L
(odd drive sel for RK05F)
NEW ADDRESS REGISTER
R13 1K
LO CYL OFFSET H
R15 1K
CAD1 DC 128 H
R14 1K
R11 1K
HI CYL OFFSET H
7408 E24
7402 E17
ADDRESS INVALID L
CAD2 GOOD STROBE H
CAD2 CNTR INIT L
CAD2 HI CYL ADDR ENB H
CAD2 RESET CNTR H
74193 E25
74193 E11
74193 E5
CAD2 CNT UP
CAD2 CNT DN
CAD1 CURR CYL ADDR 1 H
CAD1 CURR CYL ADDR 2 H
CAD1 CURR CYL ADDR 4 H
CAD1 CURR CYL ADDR 8 H
CAD1 CURR CYL ADDR 16 H
CAD1 CURR CYL ADDR 32 H
CAD1 CURR CYL ADDR 64 H
CAD1 CURR CYL ADDR 128 H
CAD1 CURR CYL ADDR 256 H
DESIRED CYLINDER ADDRESS REGISTER
CURRENT CYLINDER ADDRESS REGISTER
ETCH REV C
FIRST USED ON RK05F
TITLE CYLINDER ADDRESS AND DIFFERENCE (CADI)
NEXT HIGHER ASSY. RK05F
D-UA-M7681-0-0
SIZE D CODE CS NUMBER M7681-0-1 REV. C
SHEET 1 OF 3
M7681-0-1

"THIS DRAWING AND SPECIFICATIONS, HEREIN, ARE THE PROPERTY OF DIGITAL EQUIPMENT CORPORATION AND SHALL NOT BE REPRODUCED OR COPIED OR USED IN WHOLE OR IN PART AS THE BASIS FOR THE MANUFACTURE OR SALE OF ITEMS WITHOUT WRITTEN PERMISSION. COPYRIGHT © 1976 DIGITAL EQUIPMENT CORPORATION"

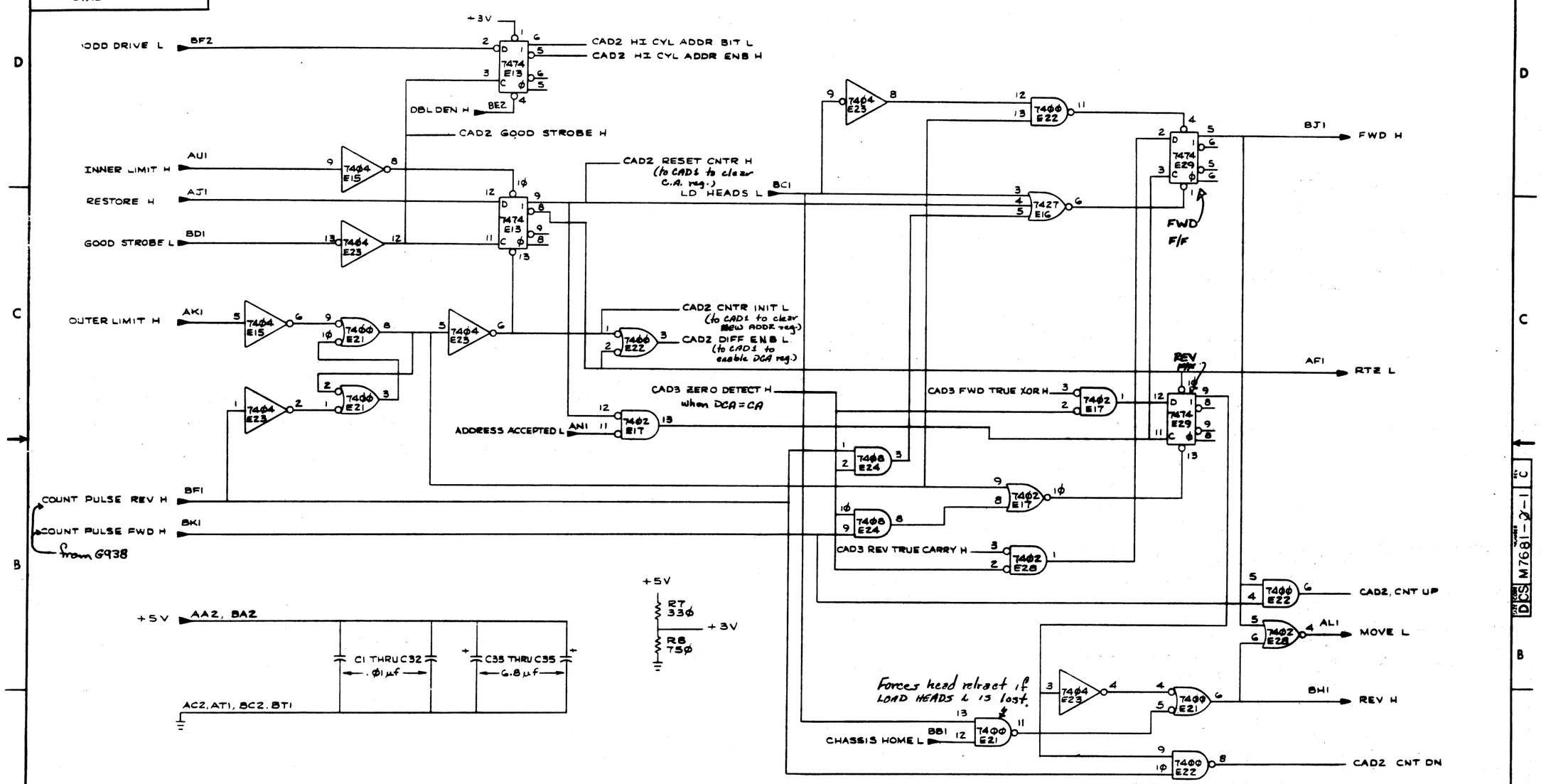

REVISIONS		
CHK	CHANGE NO.	REV.

TITLE	SIZE	CODE	NUMBER	REV.
CYLINDER ADDRESS AND DIFFERENCE (CAD2)	D	CS	M7681-0-1	C
SCALE —	SHEET 2 OF 3	DIST.		

DEC FORM NO. DRD 131

82

"THIS DRAWING AND SPECIFICATIONS, HEREIN, ARE THE PROPERTY OF DIGITAL EQUIPMENT CORPORATION AND SHALL NOT BE REPRODUCED OR COPIED OR USED IN WHOLE OR IN PART AS THE BASIS FOR THE MANUFACTURE OR SALE OF ITEMS WITHOUT WRITTEN PERMISSION. COPYRIGHT © 1976 DIGITAL EQUIPMENT CORPORATION"

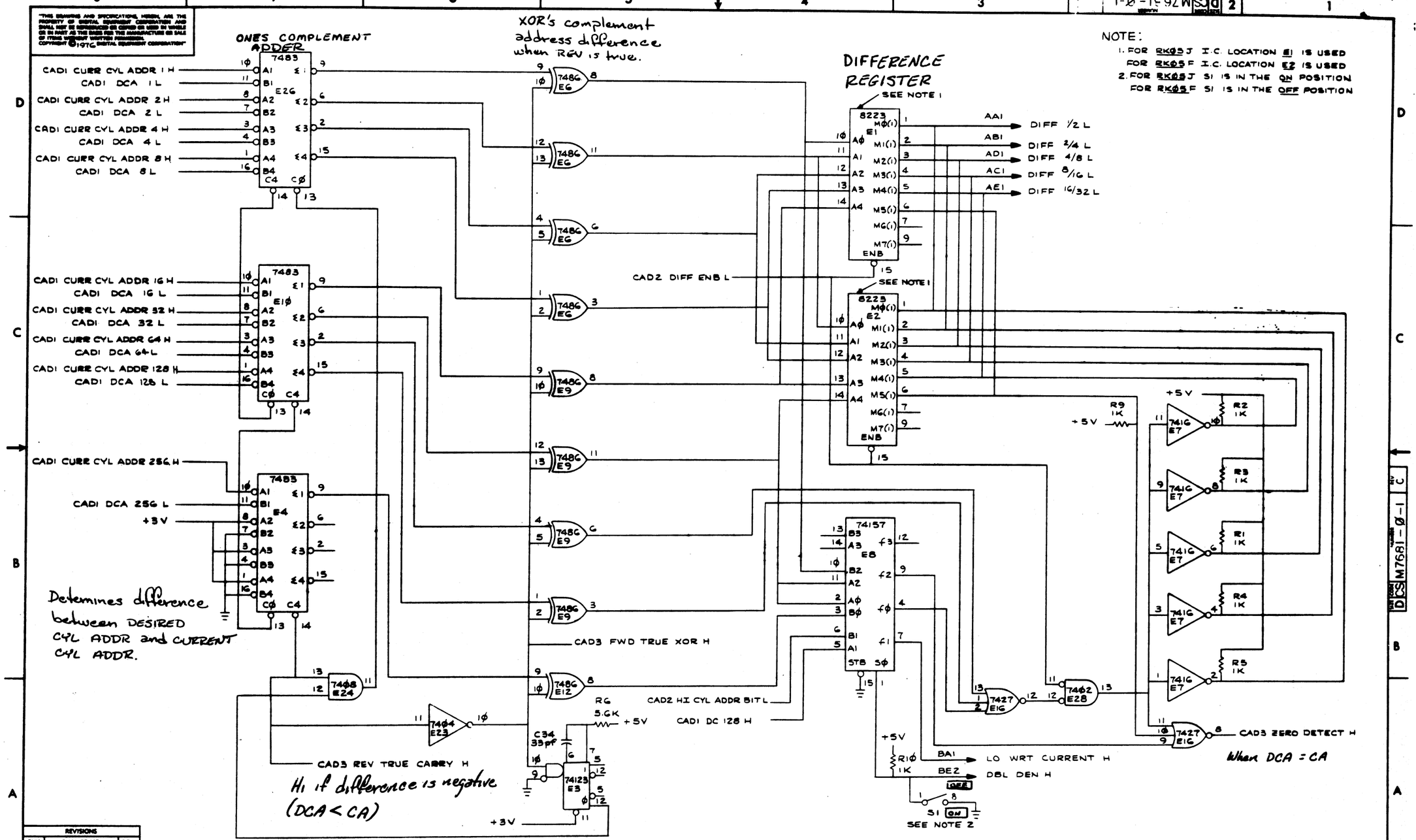

REVISIONS		
CHK	CHANGE NO.	REV.

TITLE CYLINDER ADDRESS AND DIFFERENCE (CAD3)

SIZE D CODE CS NUMBER M7681-0-1 REV. C

SCALE — SHEET 3 OF 3 DIST.

DEC FORM NO. DPD 139

"THIS DRAWING AND SPECIFICATIONS, HEREIN, ARE THE PROPERTY OF DIGITAL EQUIPMENT CORPORATION AND SHALL NOT BE REPRODUCED OR COPIED OR USED IN WHOLE OR IN PART AS THE BASIS FOR THE MANUFACTURE OR SALE OF ITEMS WITHOUT WRITTEN PERMISSION.
COPYRIGHT © 1974 "DIGITAL EQUIPMENT CORPORATION"

NOTES:

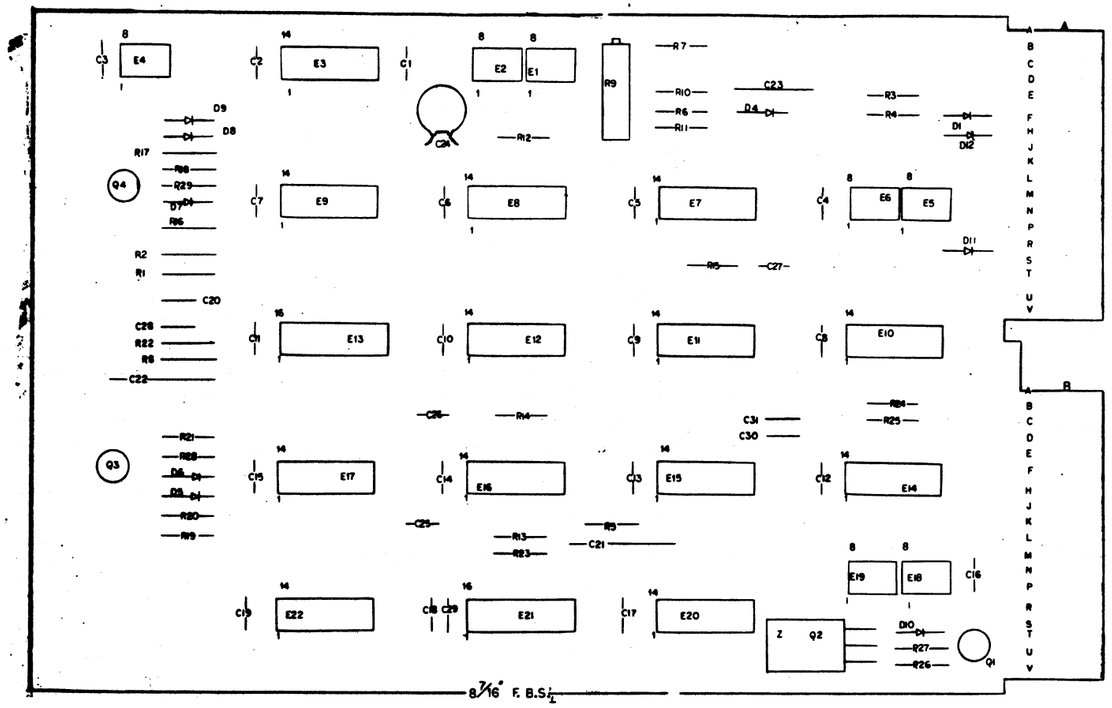

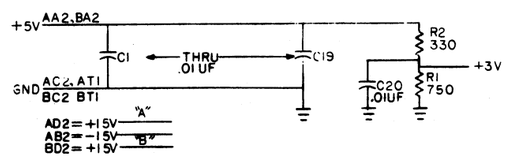

QTY	REF. DESIGNATION	DESCRIPTION	PART NO.	ITEM NO.
1	C24	CAP. .047UF 16V DISC	1009678	50
1	D12	DIODE IN5248B 18V 5%	1110766	49
1		KEP NUT #4	9006557	48
1		SCREW 4-40 X 5/16	9006010-1	47
2		HANDLE. FLIP CHIP-MAGENTA	9008337-06	46
4		EYELET #GS4-7	9006732	45
1	E1	I.C. DEC 301	1910282	44
6	E2,4,6,5,18,19	I.C. DEC 75451	1910406	43
2	E21, E13	I.C. DEC 74123	1910436	42
2	E22,E17	I.C. DEC 7493	1909054	41
2	E9, E15	I.C. DEC 7474	1905547	40
2	E12,10	I.C. DEC 7410	1905576	39
2	E11,E8	I.C. DEC 7404	1909886	38
1	E20	I.C. DEC 7402	1909004	37
4	E3,7,16,14	IC. DEC 7400	1905575	36
1	Q2	TRANSISTOR DEC 4403	1510171	35
1	Q3	TRANSISTOR DEC 6534D	1503409-00	34
1	Q1	TRANSISTOR DEC 2219	1501881	33
1	Q4	TRANSISTOR DEC 6531	1509338	32
1	R9	RES. 10K 3/4W 10% 76PR	1309143-10	31
1	R6	RES. 10M 1/4W 5%	1302666	30
2	R7,R10	RES. 1M 1/4W 5%	1309595	29
				28
				27
5	R17,5,22,23,8	RES. 10K 1/4W 5%	1300479	26
1	R18	RES. 5.6K 1/4W 5%	1301874	25
1	R11	RES. 4.7K 1/4W 5%	1300447	24
1	R4	RES. 680 1/4W 5%	1300424	23
1	R28	RES. 1.5K 1/4W 5%	1300391	22
9	R12,13,14,15,20,24,25,26,29	RES. 1K 1/4W 5%	1300365	21
1	R1	RES. 750 1/4W 5%	1301401	20
2	R16,R19	RES. 470 1/4W 5%	1300316	19
2	R2,R3	RES. 330 1/4W 5%	1300295	18
1	R27	RES. 100 1/4W 5%	1300229	17
A/R		GRIPLETS	1210244-0	16
2	D5,D7	DIODE IN759A 12V 5%	1110643	15
1	D4	DIODE IN748 3.9V 10%	1100121	14
1	D6	DIODE IN746A 3.3V 5%	1104860	13
3	D9,D10,D11	DIODE IN4001	1102942	12
1	D1	DIODE D670	1102162	11
1	D8	DIODE D664	1100114	10
2	C28,C29	CAP. 470PF 100V 5% DM.	1000024	9
1	C23	CAP. .15UF 35V 20% TANT	1002180	8
1	C22	CAP. 10UF 20V 10% TANT	1004813	7
1	C21	CAP. .15UF 20V 10% TANT	1004812	6
25	C1-20,25-27,30,31	CAP. .01UF 100V 20% DISC.	1001610	5
1		ETCED CIRUIT BOARD	5009714	4
		MODULE ECO HISTORY	B-MH-M7701-0-6	3
		ASSY/DRILLING HOLE LAYOUT	E-AH-M7701-0-5	2
		X-Y COORDINATE HOLE LOCATION	K-CO-M7701-0-4	1

PARTS LIST

ETCH BOARD REV. K

FIRST USED ON OPTION MODEL

IN748 3.9V	SAME	DEC 6534D	MPS6534
IN746A 3.3V	SAME	DEC 4403	
IN4001	SAME	IN759A	SAME
D670	IN3653		
DEC6531	MPS6531		
DEC664	IN3606		
DEC2219	2N2219		
DEC NO.	EIA NO.	DEC NO.	EIA NO.

SEMICONDUCTOR CONVERSION CHART

IC TYPE	GND	+5V
GND AND 5V ARE USUALLY PIN 7 AND 14 RESPECTIVELY EXCEPTIONS ARE STATED ABOVE		

IC PIN LOCATIONS

DALE JENSON 11-16-74 — M7701-00009 N

REV. | CHANGE NO. | CHK. | REVISIONS

DRN. ROGER V DOUCETTE DATE 10-29-71
CHK'D. NANCY MOORE DATE 11-2-71
ENG. C. Williams DATE 12-9-71
PROJ. ENG. Dale Jenson DATE 7-22-72
PRODUCT ENG. C. Williams DATE 7/21/72
NEXT HIGHER ASSY
SCALE
SHEET 1 OF 2

digital

TITLE DISK ENG. CONTROL + INTERLOCK

SIZE D | CODE | NUMBER M7701-0-1 | REV. N

DIST.

M7701-0-1 D N

84

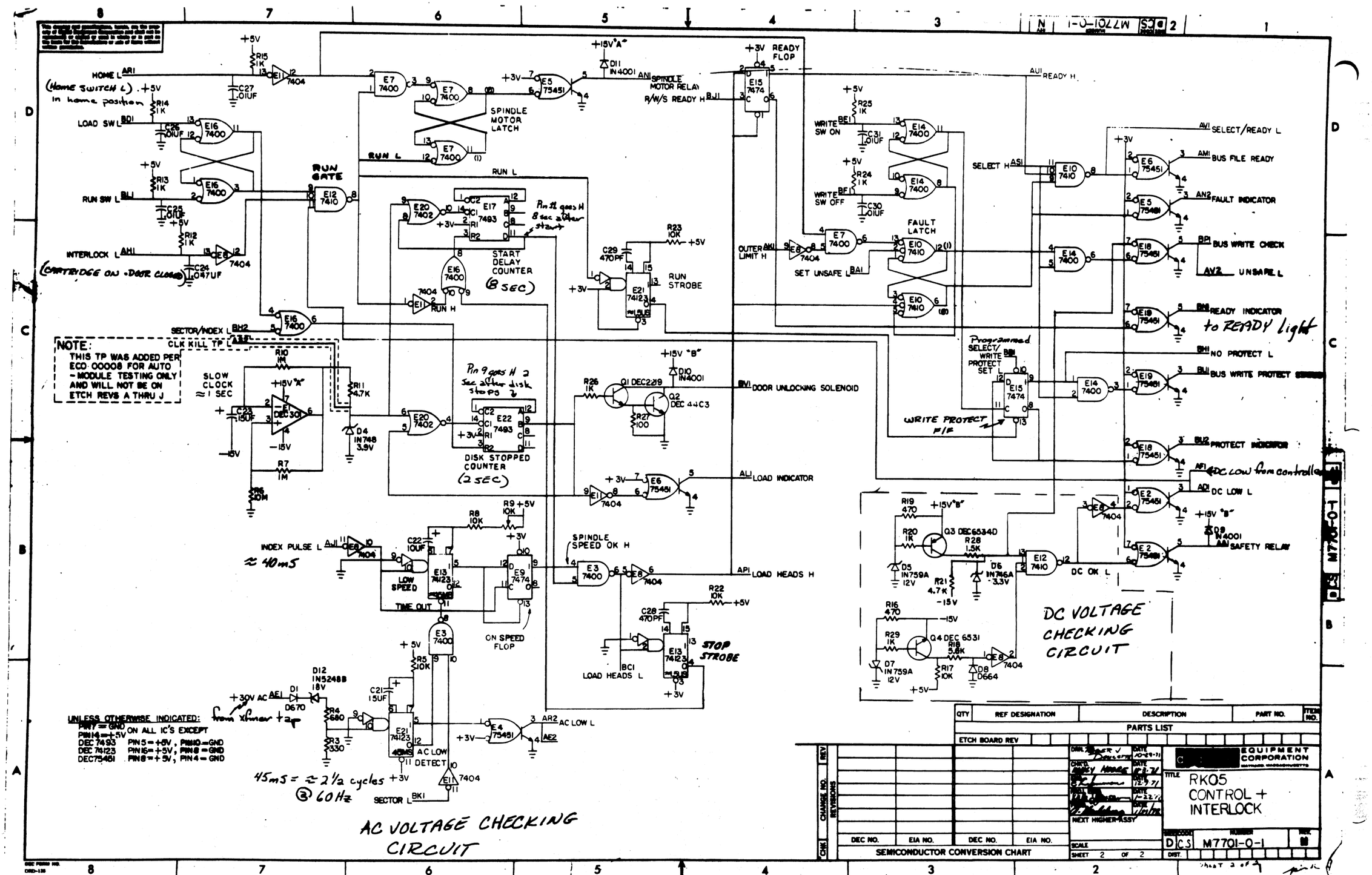
HOME L
(Home switch L) +5V in home position
LOAD SW L
RUN SW L
INTERLOCK L
(CARTRIDGE ON + DOOR CLOSED)
RUN GATE
SPINDLE MOTOR LATCH
SPINDLE MOTOR RELAY
R/W/S READY H
READY FLOP
READY H
WRITE SW ON
WRITE SW OFF
FAULT LATCH
SELECT H
SET UNSAFE L
OUTER LIMIT H
SELECT/READY L
BUS FILE READY
FAULT INDICATOR
BUS WRITE CHECK
UNSAFE L
READY INDICATOR
to READY light
NO PROTECT L
BUS WRITE PROTECT
PROTECT INDICATOR
DC LOW from controller
DC LOW L
SAFETY RELAY
DC OK L
START DELAY COUNTER (8 SEC)
Pin 11 goes H 8 sec after start
RUN L
RUN H
RUN STROBE
SECTOR/INDEX L
CLK KILL TP
NOTE: THIS TP WAS ADDED PER ECO 00008 FOR AUTO-MODULE TESTING ONLY AND WILL NOT BE ON ETCH REVS A THRU J
SLOW CLOCK ≈1 SEC
Pin 9 goes H 2 sec after disk stops
DISK STOPPED COUNTER (2 SEC)
DOOR UNLOCKING SOLENOID
LOAD INDICATOR
Programmed SELECT/WRITE PROTECT SET
WRITE PROTECT F/F
INDEX PULSE L
≈ 40ms
LOW SPEED
TIME OUT
ON SPEED FLOP
SPINDLE SPEED OK H
LOAD HEADS H
LOAD HEADS L
STOP STROBE
AC LOW L
AC LOW DETECT
SECTOR L
+30V AC from xfmer + 2p
45ms = ≈ 2½ cycles @ 60Hz
AC VOLTAGE CHECKING CIRCUIT
DC VOLTAGE CHECKING CIRCUIT
UNLESS OTHERWISE INDICATED:
PIN7 = GND
PIN14 = +5V ON ALL IC'S EXCEPT
DEC 7493 PIN 5 = +5V, PIN10 = GND
DEC 74123 PIN16 = +5V, PIN8 = GND
DEC75451 PIN8 = +5V, PIN4 = GND
PARTS LIST
QTY
REF DESIGNATION
DESCRIPTION
PART NO.
ITEM NO.
ETCH BOARD REV
SEMICONDUCTOR CONVERSION CHART
DEC NO.
EIA NO.
EQUIPMENT CORPORATION
RK05 CONTROL + INTERLOCK
M7701-0-1
SHEET 2 OF 2
NEXT HIGHER ASSY
SCALE
DIST.
REVISIONS
CHANGE NO.
REV
CHK

NOTES:

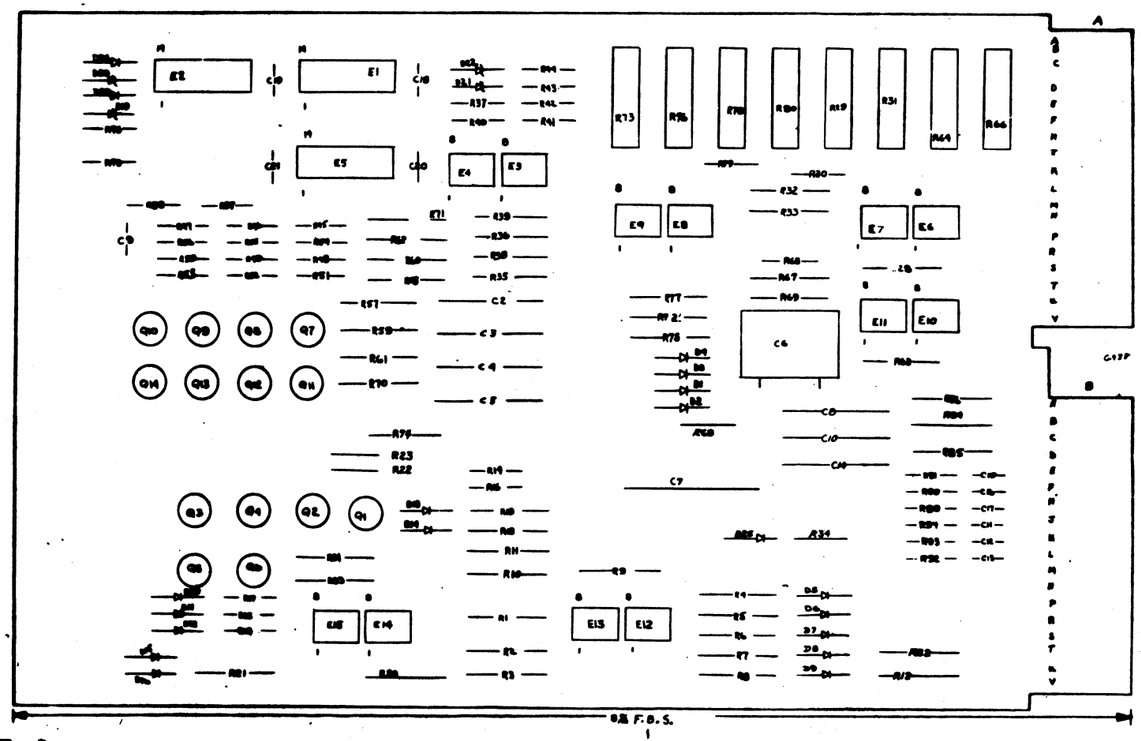
E2
E1
E5
E4
E3
E9
E8
E7
E6
E11
E10
E15
E12
E16
E14
C6
Q10
Q9
Q8
Q7
Q14
Q13
Q12
Q11
Q3
Q4
Q2
Q1
Q6
Q5
R13
R18
R19
R31
R66
R69
R77
R78
R23
R22
R34
R95
R96
R21
R1
R2
R3
R4
R5
R6
R7
R8
R9
R57
R59
R61
R70
R79
R80
R81
R82
R83
R84
R85
R86
R87
R88
R89
R90
R91
R92
R93
R94
R97
R98
R99
R100
R101
R102
R103
R104
R105
R106
R107
R108
R109
R110
R111
R112
R113
R114
R115
R116
R117
R118
R119
R120
R121
R122
R123
R124
R125
R126
R127
R128
R129
R130
R131
R132
R133
R134
R135
R136

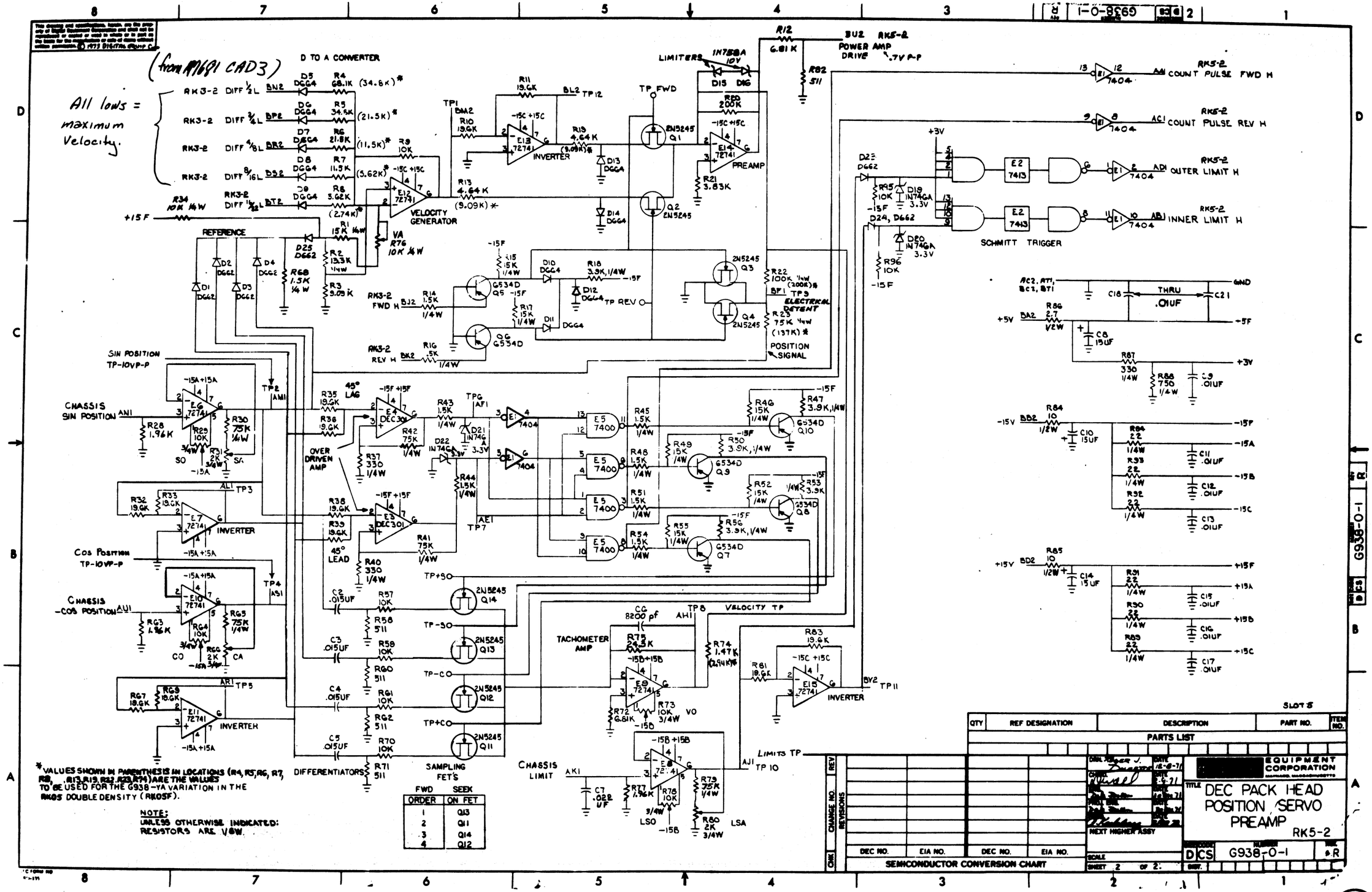

FWD ORDER	SEEK ON FET
1	Q13
2	Q11
3	Q14
4	Q12

*VALUES SHOWN IN PARENTHESIS IN LOCATIONS (R4, R5, R6, R7, R8, R13, R19, R22, R23, R74) ARE THE VALUES TO BE USED FOR THE G938-YA VARIATION IN THE RK05 DOUBLE DENSITY (RK05F).

NOTE: UNLESS OTHERWISE INDICATED: RESISTORS ARE 1/8W.

87

THIS SCHEMATIC IS FURNISHED FOR TEST AND MAINTENANCE PURPOSES. THE CIRCUITS ARE PROPRIETARY IN NATURE AND SHOULD BE TREATED ACCORDINGLY
COPYRIGHT 1971 BY DIGITAL EQUIPMENT CORPORATION

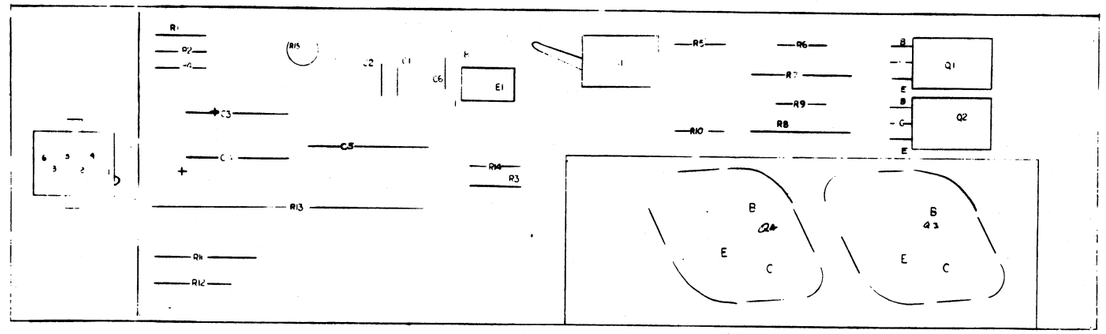

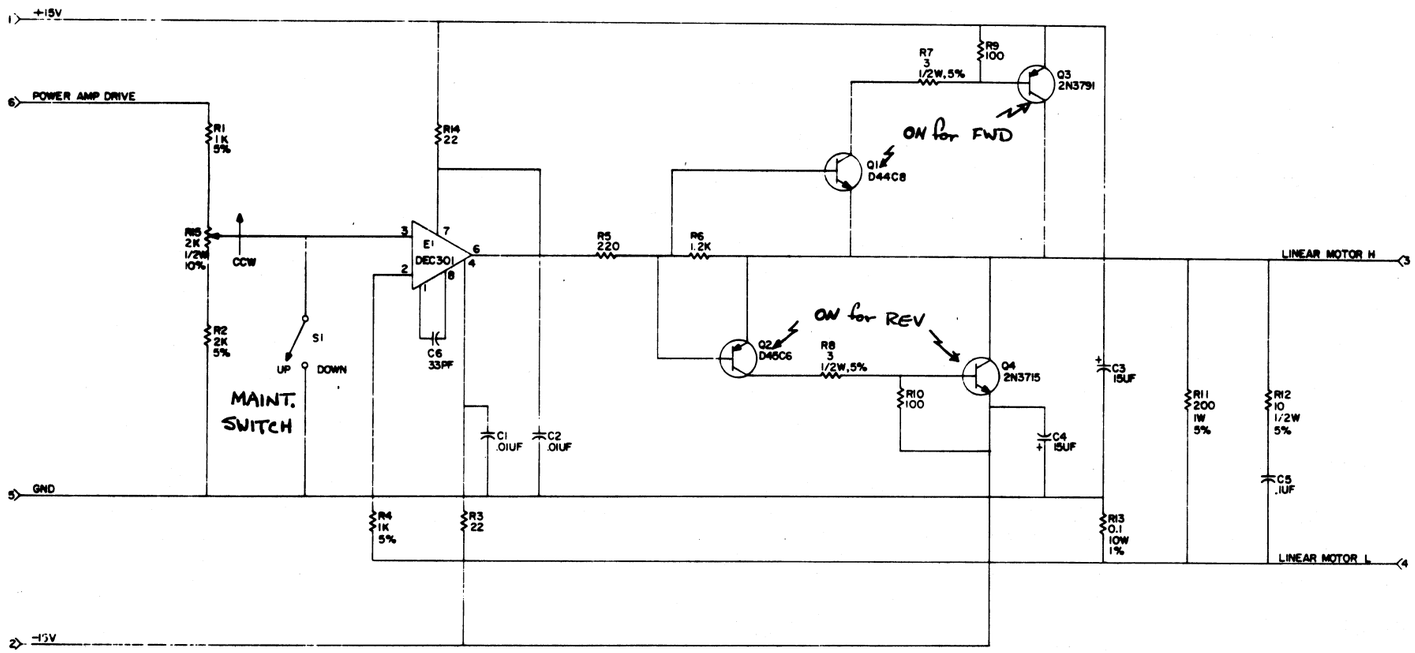

UNLESS OTHERWISE INDICATED:
RES. ARE 1/4W, 10%
R13 IS A CURRENT SAMPLING RES.

REVISIONS			
Code	Code NO	REV	
	00001	F	
		G	
		H	
		J	
		K	

DRAWN: D. JENSEN
CHECKED: D. JENSEN
APPD: D. JENSEN

DATE: 8/31/71
DATE: 12-7-71
DATE: 12-7-71
DATE: 12-7-71

TRANSISTOR & DIODE CONVERSION CHART

	EIA	DEC	EIA
2N3715			
2N3791			
D45C6			
D44C8			

DIGITAL EQUIPMENT CORPORATION
MAYNARD MASSACHUSETTS

TITLE: DECPAK HEAD POS. SERVO PWR. AMP.

SIZE	CODE	NUMBER	REV
D	CS	H604-0-1	K

PRINTED CIRCUIT REV: K

88

THIS SCHEMATIC IS FURNISHED ONLY FOR TEST AND MAINTENANCE PURPOSES. THE CIRCUITS ARE PROPRIETARY IN NATURE AND SHOULD BE TREATED ACCORDINGLY.
COPYRIGHT 1971 BY DIGITAL EQUIPMENT CORPORATION

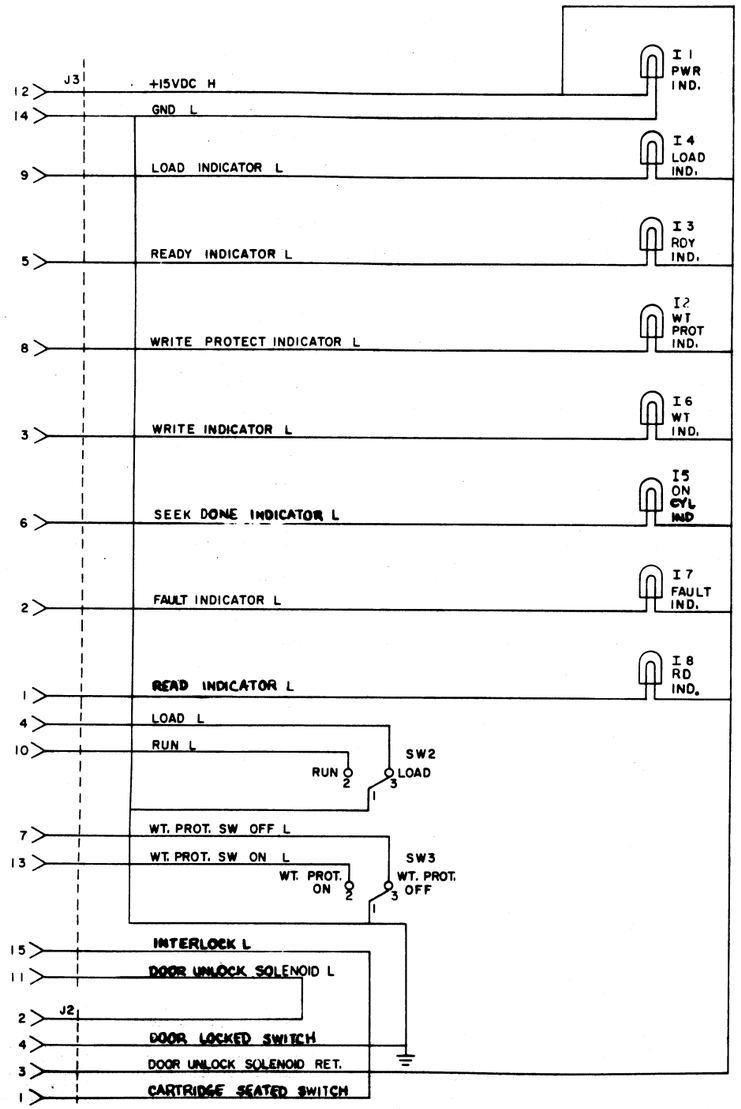

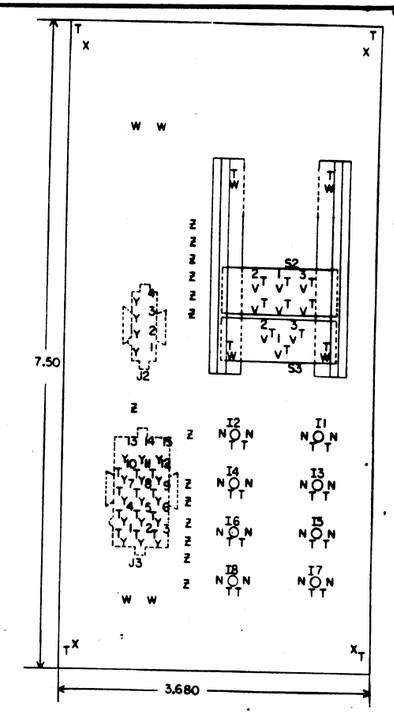

REVISIONS			
CHK	CHG NO.	REV.	
	02001	B	
D. TENSEN			
	02002	C	
H. Quinn			
D. JENSEN			
	02005	D	
D. Jensen			

DRN. S. COOPER	DATE 11-20-71	
CHK'D	DATE	
ENG.	DATE 19 Dec 71	
PROD.	DATE	

TRANSISTOR & DIODE CONVERSION CHART

DEC	EIA	DEC	EIA

digital EQUIPMENT CORPORATION MAYNARD, MASSACHUSETTS

TITLE RK7-1
RK05 CONTROL PANEL

SIZE	CODE	NUMBER	REV.
C	CS	5409698-0-1	D

PRINTED CIRCUIT REV. D

DEC FORM NO. DRC 102

SIZE C CODE CS NUMBER 5409698-0-1 REV. D

This drawing and specifications, herein, are the property of Digital Equipment Corporation and shall not be reproduced or copied or used in whole or in part as the basis for the manufacture or sale of items without written permission.

NOTE:
1. RELAY CONTACTS ARE SHOWN IN THE DE-ENERGIZED POSITIONS.
2. SAFETY RELAY L AND BLOWER MTR RELAY DR ARE THE SAME SIGNAL.
3. SPINDLE MOTOR RELAY L AND DISK RELAY DR ARE THE SAME SIGNAL.
4. THIS MODULE MUST BE UL APPROVED

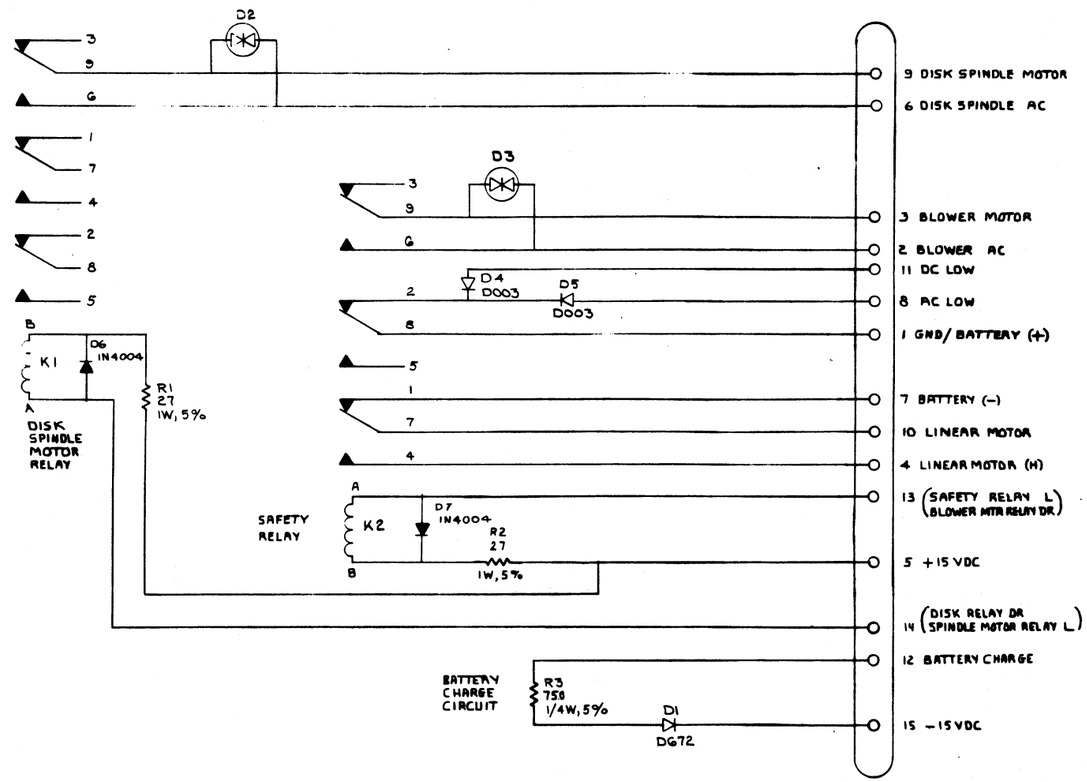

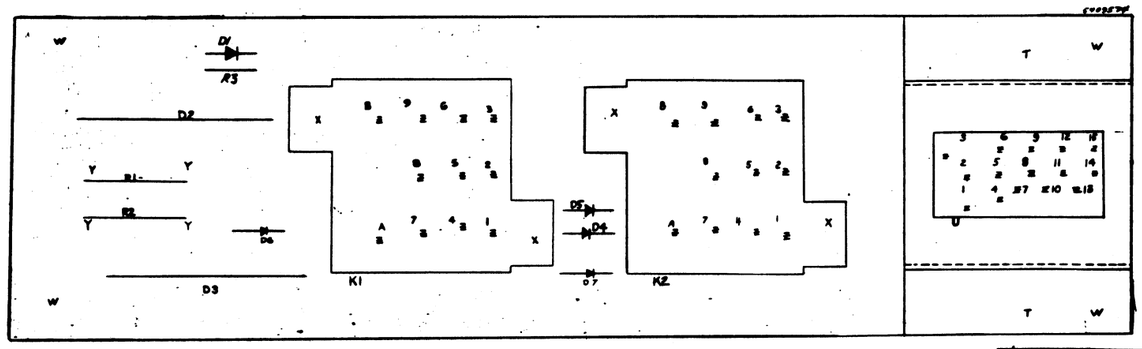

QTY	REF DESIGNATION	DESCRIPTION	PART NO.	ITEM NO.
		PARTS LIST		
	ETCH BOARD REV F			

DEC NO.	EIA NO.	DEC NO.	EIA NO.
D003	IN994		
D672	IN3653		

SEMICONDUCTOR CONVERSION CHART

REV	CHANGE NO.
H	5409574-00003
F	5409574-00002
E	5409574-00001

REVISIONS

DRAWN: ROBERT J DOUCETTE DATE 12-9-71
CHK'D: DATE 12-15-71
DATE 12-20-72
PROD: DATE 12-20-72

NEXT HIGHER ASSY

SCALE

SHEET 1 OF 1

[redacted] EQUIPMENT CORPORATION MAYNARD MASSACHUSETTS

TITLE DEC PACK MOTOR RELAYS

DCS 5409574-0-1 REV. H

DIST.

DEC FORM NO. DRD-135

90

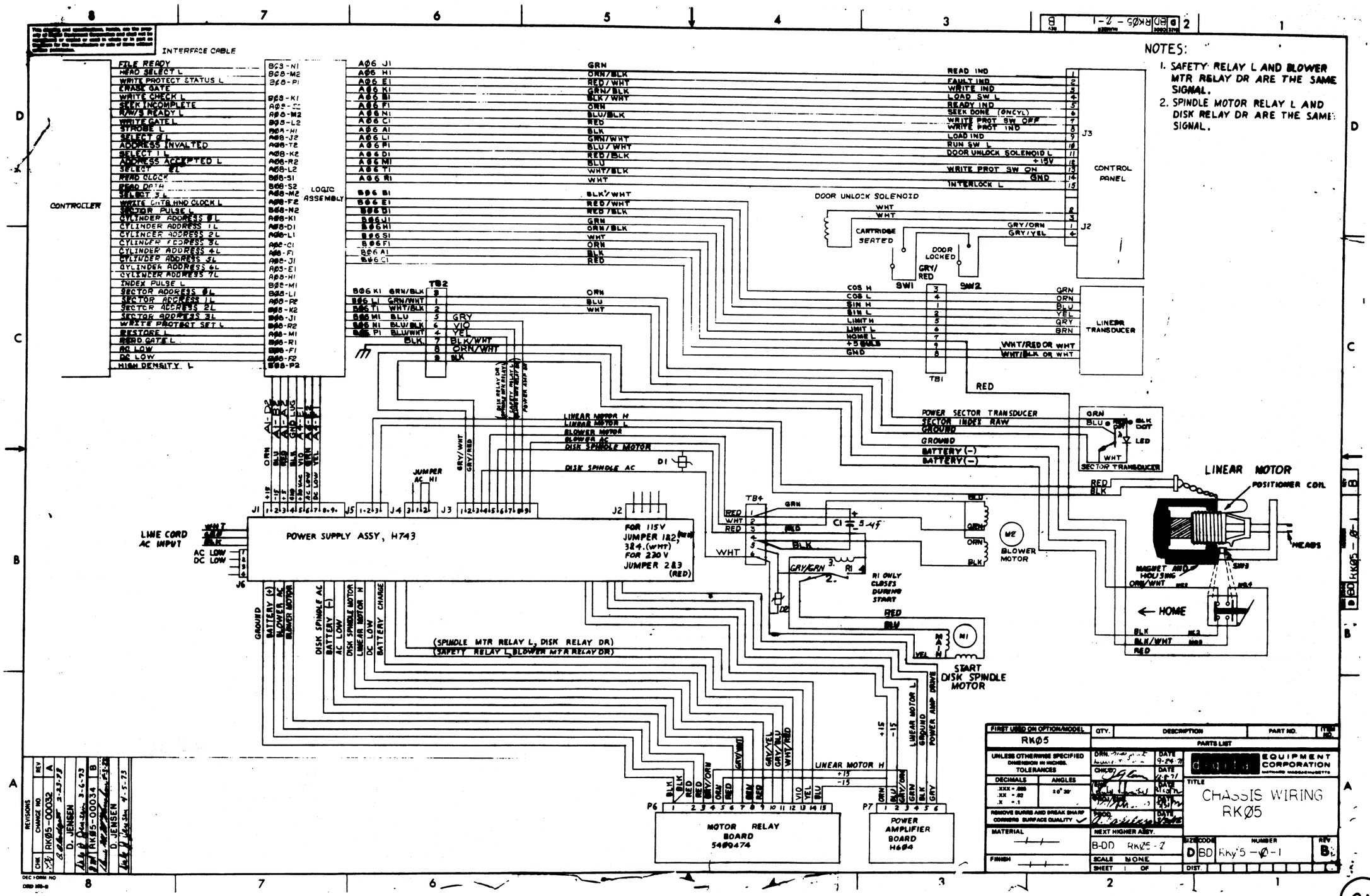

NOTES:

1. SAFETY RELAY L AND BLOWER MTR RELAY DR ARE THE SAME SIGNAL.
2. SPINDLE MOTOR RELAY L AND DISK RELAY DR ARE THE SAME SIGNAL.

FIRST USED ON OPTION/MODEL	QTY.	DESCRIPTION	PART NO.	ITEM NO.
RKØ5		PARTS LIST		

UNLESS OTHERWISE SPECIFIED DIMENSION IN INCHES. TOLERANCES
DECIMALS .XXX = .005 .XX = .02 .X = .1
ANGLES ±0° 30'
REMOVE BURRS AND BREAK SHARP CORNERS SURFACE QUALITY ✓
MATERIAL
FINISH

DRN. DATE 9-24-71
CHK'D DATE 11-8-71
ISS'D DATE 11-13-71
APPD. DATE 12-15-71

digital EQUIPMENT CORPORATION MAYNARD, MASSACHUSETTS

TITLE CHASSIS WIRING RKØ5

NEXT HIGHER ASSY. B-DD RKØ5-Ø
SCALE NONE
SHEET 1 OF

SIZE D CODE BD NUMBER RKØ5-Ø-1 REV. B
DIST.

REV	CHG.	CHANGE NO	
A		RKØ5-00032	2-23-73 D. JENSEN
B		RKØ5-00034	3-6-73 D. JENSEN 4-5-73

DEC FORM NO DRD 358-B

91

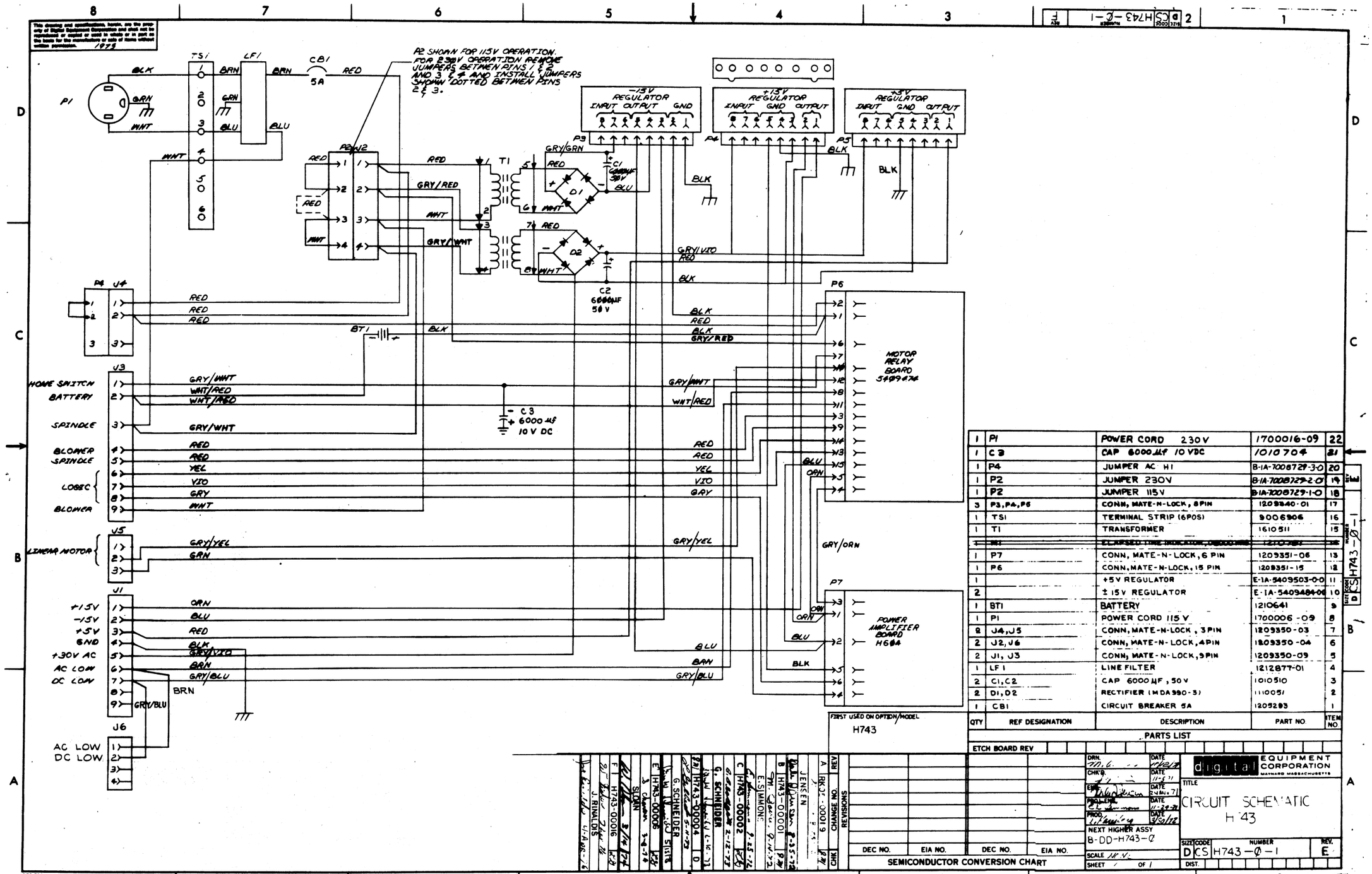

QTY	REF DESIGNATION	DESCRIPTION	PART NO.	ITEM NO.
1	P1	POWER CORD 230V	1700016-09	22
1	C3	CAP 6000µf 10 VDC	1010704	21
1	P4	JUMPER AC HI	B-1A-7008729-3-0	20
1	P2	JUMPER 230V	B-1A-7008729-2-0	19
1	P2	JUMPER 115V	B-1A-7008729-1-0	18
3	P3, P4, P6	CONN, MATE-N-LOCK, 8PIN	1209340-01	17
1	TS1	TERMINAL STRIP (6POS)	9006906	16
1	T1	TRANSFORMER	1610511	15
1	~~BT1~~	~~ELECTROLYTIC INDICATOR, CHROME~~	~~1210-641~~	~~14~~
1	P7	CONN, MATE-N-LOCK, 6 PIN	1209351-06	13
1	P6	CONN, MATE-N-LOCK, 15 PIN	1209351-15	12
1		+5V REGULATOR	E-1A-5409503-0-0	11
2		± 15V REGULATOR	E-1A-5409484-00	10
1	BT1	BATTERY	1210641	9
1	P1	POWER CORD 115 V	1700006-09	8
2	J4, J5	CONN, MATE-N-LOCK, 3PIN	1209350-03	7
2	J2, J6	CONN, MATE-N-LOCK, 4PIN	1209350-04	6
2	J1, J3	CONN, MATE-N-LOCK, 9PIN	1209350-09	5
1	LF1	LINE FILTER	1212877-01	4
2	C1, C2	CAP 6000µF, 50V	1010510	3
2	D1, D2	RECTIFIER (MDA990-3)	1110051	2
1	CB1	CIRCUIT BREAKER 5A	1205283	1

PARTS LIST

FIRST USED ON OPTION/MODEL: H743

ETCH BOARD REV

REV	CHANGE NO.	CHK
A	RCN-C-0016	
B	H743-00001	
C	H743-00002	
D	H743-00004	
E	H743-00006	
F	H743-00016	

REVISIONS

DEC NO. | EIA NO. | DEC NO. | EIA NO.

SEMICONDUCTOR CONVERSION CHART

DRN. | DATE
CHK'D | DATE
ENG. | DATE
PROJ. ENG. | DATE
PROD. | DATE

NEXT HIGHER ASSY: B-DD-H743-0

SCALE: 1/4 V.

SHEET 1 OF 1

digital EQUIPMENT CORPORATION
MAYNARD MASSACHUSETTS

TITLE: CIRCUIT SCHEMATIC H743

SIZE D | CODE CS | NUMBER H743-0-1 | REV. E

DIST.

DEC FORM NO. DRD-135

92

WIRE TABLE

ITEM NO.	DESCRIPTION AWG	COLOR	LENGTH IN. ± 1/8"	STRIP LENGTH-X	STRIP LENGTH-Y	CONNECTIONS FROM	TO
42	—	BLK	2 1/8	—	1/2"	L1	CATHODE D2 — LUG
42	—	BLK	2 1/8	—	1/2"	L1	R21-T2
68	18	VIO	2 1/4	1/2"	1/2"	Q5-C	CATHODE D2 — LUG
66		GRN	4 1/4	1/2"	1/2"	D2 ANODE	ANODE D3 — LUG
65		YEL	4 1/8	1/2"	1/2"	D3 CATHODE	R21-T1
70		WHT	4 3/8	1/2"	1/2"	SPLIT LUG #1	Q5-E
69		GRY	5 1/4	1/2"	1/2"	SPLIT LUG #2	Q5-B
68		VIO	5 1/4	1/2"	1/2"	SPLIT LUG #3	Q5-C
67		BLU	8	1/2"	1/2"	SPLIT LUG #4	R21-T2
66		GRN	5 3/4	1/2"	1/2"	SPLIT LUG #6	ANODE D3 — LUG
65	18	YEL	8 1/4	1/2"	1/2"	SPLIT LUG #5	R21-T1

SEE NOTE #5

EXTERNAL COMPONENTS

ITEM NO.	LENGHT	DESCRIPTION	POL.	CONNECTIONS FROM	TO	POL
45	NOTE #2	RES. 100 1/4W 5%		Q5-E	Q5-B	
46	NOTE #3	CAP. 10UF, 50V(10Z)	+	Q5-E	D3 — LUG	−

NOTES:

1. R13 IS USED FOR OUTPUT VOLTAGE ADJUSTMENT. R7 IS USED FOR OUTPUT CURRENT ADJUSTMENT.
2. CUT LEADS OF RES. (R22) SO THERE IS 3/8" OF A LEAD LEFT ON BOTH ENDS. — R22 — 3/8"
3. CUT LEADS OF CAP. (C11) SO THERE IS 1/2" OF A LEAD LEFT ON BOTH ENDS. — C11 — 1/2"
4. THERMAL COMPOUND (ITEM 31) IS TO BE APPLIED TO BOTH SIDES OF ALL THERMAL INSULATORS (ITEM 49, 50 & 63). BOTH SIDES OF EACH INSULATOR SHOULD BE COVERED, LEAVING NO VOIDS WHEN INSTALLED. CARE MUST BE EXERCISED SO THAT NO EXTRA COMPOUND INTERFERES WITH ANY ELECTRICAL CONNECTION MADE TO ANY DIVICE.
5. WHEN ASSEMBLING THE WIRES FROM THE CIRCUIT BOARD TO THE HEAT SINK, PLACE THE MODULE AGAINST THE HEAT SINK, WIRE AS SHOWN BY THE WIRE LIST AND MAKE A SERVICE LOOP AT THE CONNECTIONS ON THE HEAT SINK TO TAKE UP ANY EXCESS WIRE THAT MIGHT BE AVAILABLE.

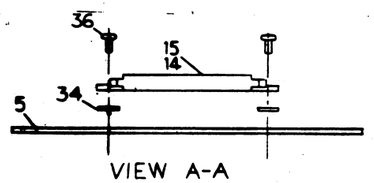

VIEW A-A
SCALE: NONE

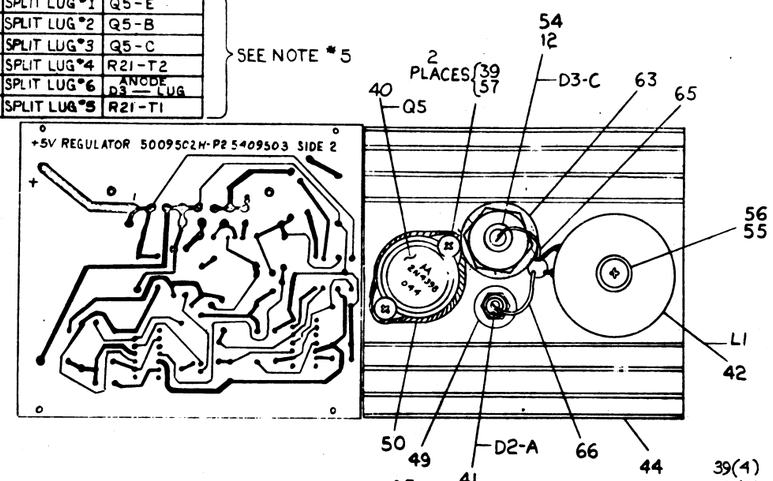

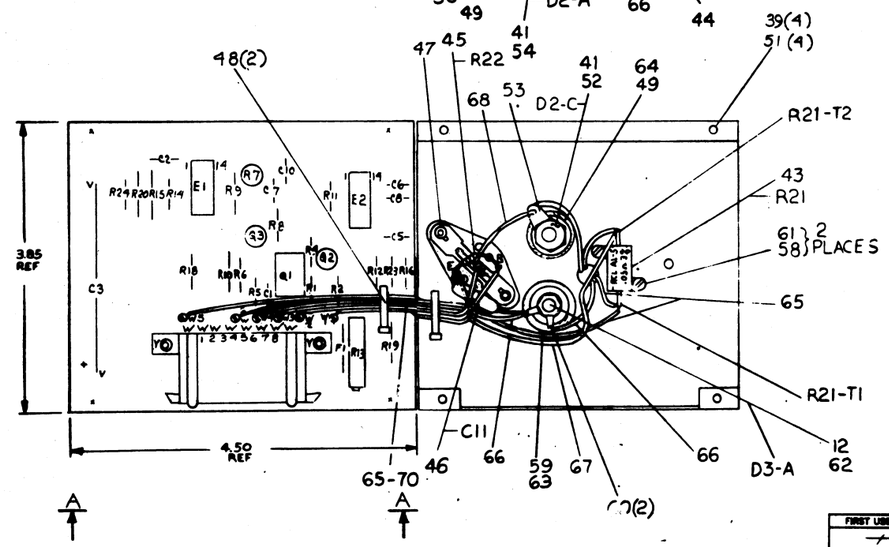

QTY	REF DESIGNATION	DESCRIPTION	PART NO.	ITEM NO.
		PARTS LIST		
	ETCH BOARD REV H			

FIRST USED ON OPTION MODEL	
—	—

DEC NO.	EIA NO.	DEC NO.	EIA NO.
		IN 3889	SAME
		2N4398	—
		D45C6	—
		2N4441	—
		DEC 534 D	MPS 6534
		IN 752 A	SAME

SEMICONDUCTOR CONVERSION CHART

REV	CHANGE NO.	REVISIONS
R	5409503-0003	REVISED & REDRAWN

DRN. J. RINALDIS

		DATE
DRN.	G MARINI	8-21-71
CHK'D.	J FLEMING	8-27-71
ENG.	P SVENDSON	9-8-71
PROJ. ENG.	P SVENDSON	9-8-71
APPR.	P FAZIO	9-9-71

NEXT HIGHER ASSY — —

SCALE NONE
SHEET 1 OF 1

[redacted] EQUIPMENT CORPORATION
MAYNARD, MASSACHUSETTS

TITLE
+ 5 VOLT POWER REGULATOR

SIZE D | CODE IA | NUMBER 5409503-0-0 | REV. R
DIST.

IC TYPE	GND	+5V

GND AND 5V ARE USUALLY PIN 7 AND 14
CORRESPONDING PINS ARE SHOWN ABOVE
IC PIN LOCATIONS

THIS SCHEMATIC IS FURNISHED ONLY FOR TEST AND MAINTENANCE PURPOSES. THE DRAWINGS ARE PROPRIETARY IN NATURE AND SHOULD BE TREATED ACCORDINGLY
COPYRIGHT 1971 BY DIGITAL EQUIPMENT CORPORATION

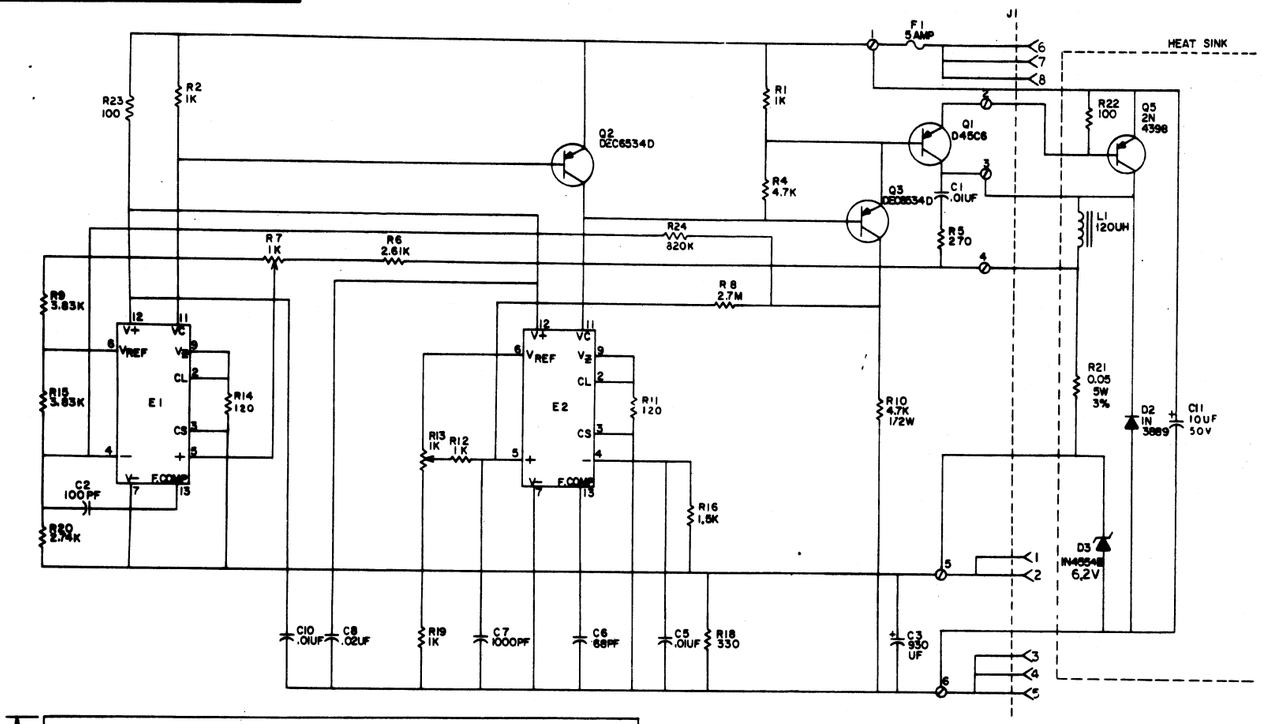

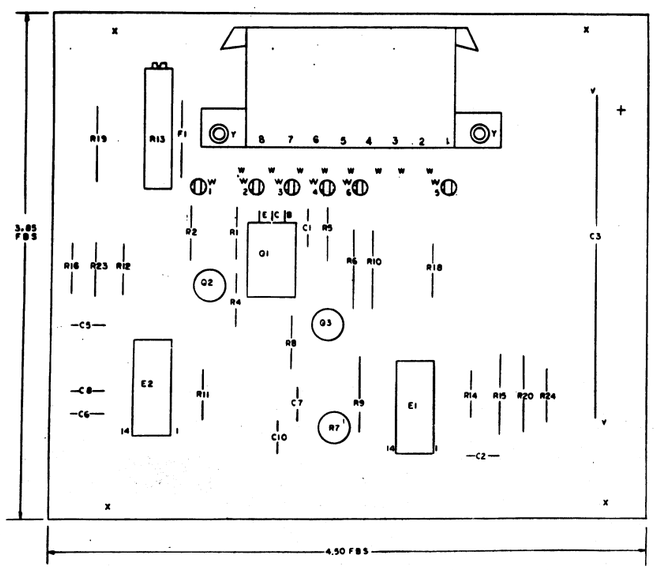

QTY	REF DESIGNATION	DESCRIPTION	PART NO.	ITEM NO.
A/R		WIRE #18 AWG STRD (WHT.)	9107360-99	70
A/R		WIRE #18 AWG STRD (GRY.)	9107360-88	69
A/R		WIRE #18 AWG STRD (VIO.)	9107360-77	68
A/R		WIRE #18 AWG STRD (BLU.)	9107360-66	67
A/R		WIRE #18 AWG STRD (GRN.)	9107360-55	66
A/R		WIRE #18 AWG STRD (YEL.)	9107360-44	65
1		3/16 FLAT WASHER	9006666	64
2		THERMAL INSULATOR	9009678	63
1		NUT, HEX 1/4 x 28	9008063	62
2		WASHER, INT TOOTH LOCK #2	9006631	61
2		SOLDER LUG	9006764	60
1		1/4 FLAT WASHER	9006676	59
2		SCR BINDING HD 2-56 X 3/16 SST	9006000-4	58
2		SCR PHIL PAN HD 6-32 X 5/8 SST	9006025-1	57
1		SCR PHIL TRUSS HD 10-32 X 1 SST	9006077-3	56
1		WASHER INT TOOTH LOCK #10	9006635	55
2		BUSHING	9008441	54
1		SOLDER LUG	9008150	53
1		NUT, HEX #10-32	9006564	52
4		SCR PHL PAN HD #6-20 X 3/8 ST	9008407	51
1		THERMAL INSULATOR	9008419	50
2		THERMAL INSULATOR	9008424	49
2		TIE WRAPS	9007031	48
1		TRANSISTOR SOCKET	1210130	47
1	C11	CAP 10UF 50V	1000070	46
2	R22, R23	RES 100 1/4W 5%	1300229	45
1		HEAT SINK	D-IA-5509543-0-0	44
1	R21	RES 0.05 5W 3%	1310507	43
1	L1	CHOKE 120 UH	1610323	42
1	D2	DIODE IN3889	1110491	41
1	Q5	TRANSISTOR 2N4398	1505870	40
6		WASHER INT TOOTH #6	9006633	39
2	R11, R14	RES 120 1/4W 5%	1300247	38
1	R16	RES 1.5K 1/4W 5%	1300391	37
2		EYELETS	9006732	36
6		SPLIT LUGS	9006735	35
2		WASHER NYLON	9006707	34
2	E1, E2	IC 723C D.I.P. REGULATOR	1910415	33
1	Q1	TRANSISTOR D45C6 G.E.	1510414	32
A/R		THERMAL COMPOUND	9008268	31
2	Q2, Q3	TRANSISTOR DEC 6534D	1503405-00	30
1	R8	RES 2.7M 1/4W 5%	1309680	29
2	R9, R15	RES 3.83K 1/8W 1%	1309413	28
1	R7	RES 1K 1/2W 20%	1309150-3	27
1	R13	RES 1K 10W 76PR	1309143-07	26
1	R20	RES 2.74K 1/8W 1% MF	1309868	25
1	R6	RES 2.61K 1/8W 1% MF	1303303	24
1	R19	RES 1K 1/8W 1% MF	1303114	23
				22
1	R10	RES 4.7K 1/2W 5%	1300445	21
1	R5	RES 270 1/4W 5%	1301372	20
1	R4	RES 4.7K 1/4W 5%	1300447	19
3	R1, R2, R12	RES 1K 1/4W 5%	1300365	18
1	R18	RES 330 1/4W 5%	1300235	17
1	R24	RES 820K 1/4W 10%	1303187	16
8		CONNECTOR PIN	1209456	15
1	J1	CONN. 8 PIN AMP	1209340-00	14
1	F1	FUSE 5 AMPS	1209070	13
1	D3	DIODE IN4554B 6.2V	1112122	12
1	C8	CAP .02UF 100V -0 +20% DISC	1000004	11
1	C3	CAP 930UF 30V -10 +75% ELEC.	1010509	10
3	C1, C5, C10	CAP .01UF 100V 20% DISC	1001610	9
1	C7	CAP 1000PF 100V 5% MICA	1000042	8
1	C2	CAP 100PF 100V 5% DM	1000016	7
1	C6	CAP 68PF 100V 5% DM	1000014	6
1		ETCH CIRCUIT BOARD	5009502	5
		MODULE ECO HISTORY	B MH-5409503-0-6	4
		ASSY/DRILLING HOLE LAYOUT	D-AH-5409503-0-5	3
		X-Y COORDINATE HOLE LOCATION	K-CO-5409503-0-4	2
		+5V REGULATOR	D-IA-5409503-0-0	1

PARTS LIST

TRANSISTOR & DIODE CONVERSION CHART

DEC	EIA	DEC	EIA
DEC6534C	1N4554A	IN3889	1N4148
		IN3889	1N4148

[redacted]

EQUIPMENT CORPORATION
MAYNARD MASSACHUSETTS

TITLE: +5 VOLT REGULATOR

SIZE	CODE	NUMBER	REV
D	CS	5409503-0-1	R

PRINTED CIRCUIT REV

REVISIONS

S. Cooper 6-2-71
Harry Moore 6-2-71
Sam Sargent 6/16/71

94

WIRE TABLE

ITEM NO.	DESCRIPTION AWG	DESCRIPTION COLOR	LENGTH INCHES +-1/8	STRIP LENGTH X	STRIP LENGTH Y	CONNECTIONS FROM	CONNECTIONS TO
43	—	BLK	2 1/8	—	1/2	L1	D3-LUG (CATHODE)
43	—	BLK	2 1/8	—	1/2	L1	TS-2
65	18	BLU	2 1/4	1/2	1/2	Q4-C	D3-LUG (CATHODE)
67	18	GRY	3 5/8	1/2	1/2	Q4-E	R24-T2
64	18	GRN	4 1/2	1/2	1/2	D3-ANODE	TS-1
68	18	WHT	5 7/8	1/2	1/2	SPLIT LUG *1	R24-T1
67	18	GRY	4 7/8	1/2	1/2	*2	Q4-E
66	18	VIO	5 1/8	1/2	1/2	*3	Q4-B
65	18	BLU	5 1/8	1/2	1/2	*4	Q4-C
64	18	GRN	5 1/2	1/2	1/2	*6	TS-1
63	18	YEL	6 7/8	1/2	1/2	SPLIT LUG *5	TS-2

SEE NOTE 5

EXTERNAL COMPONENTS

ITEM NO.	LENGTH	DESCRIPTION	POL	CONNECTIONS FROM	CONNECTIONS TO	POL
45	SEE NOTE 2	RES 100Ω 1/4W 5%		Q4-E	Q4-B	
47	SEE NOTE 3	CAP 10 UF 50V 10%	+	Q4-E	TS-1	—

NOTES:

1. R17 IS USED FOR OUTPUT VOLTAGE ADJUSTMENT. R2 IS USED FOR OUTPUT POWER ADJUSTMENT.
2. CUT LEADS OF RES. (R25) SO THERE IS 3/8" OF A LEAD LEFT AT BOTH ENDS. (3/8, R25)
3. CUT LEADS OF CAP.(C9) SO THERE IS 1/2 OF A LEAD LEFT AT BOTH ENDS. (1/2, C9)
4. THERMAL COMPOUND (ITEM *39) IS TO BE APPLIED TO BOTH SIDES OF ALL THERMAL INSULATORS (ITEM *50+51) BOTH SIDES OF EACH INSULATOR SHOULD BE COMPLETELY COVERED, LEAVING NO VOIDS WHEN INSTALLED. CARE MUST BE EXERCISED SO THAT NO EXTRA COMPOUND INTERFERES WITH ANY ELECTRICAL CONNECTION MADE TO ANY DEVICE.
5. WHEN ASSEMBLING THE WIRES FROM THE CIRCUIT BOARD TO THE HEAT SINK, PLACE THE MODULE AGAINST THE HEAT SINK. WIRE AS SHOWN BY THE WIRE LIST AND MAKE A SERVICE LOOP AT THE CONNECTIONS ON THE HEAT SINK TO TAKE UP ANY EXCESS WIRE THAT MIGHT BE AVAILABLE.

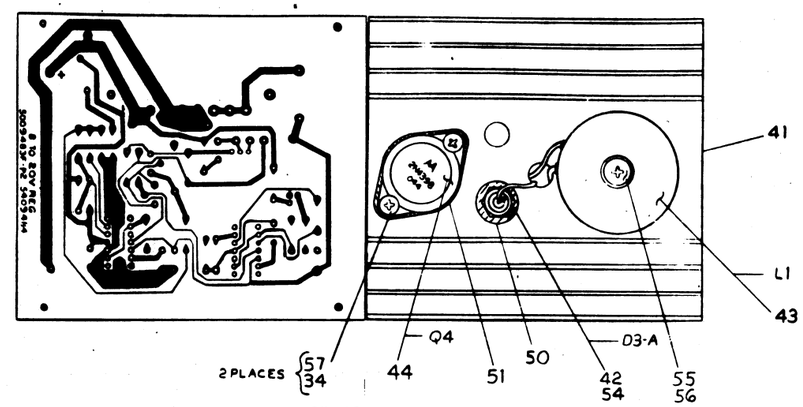

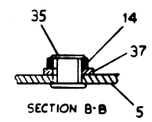

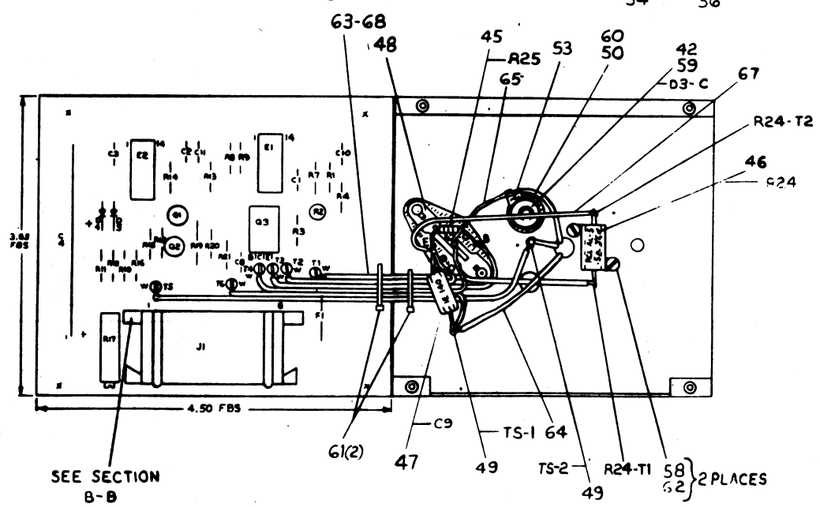

QTY	REF DESIGNATION	DESCRIPTION	PART NO	ITEM NO.
		PARTS LIST		
	ETCH BOARD REV			

DEC NO.	EIA NO.	DEC NO.	EIA NO.

SEMICONDUCTOR CONVERSION CHART

REVISED/REDRAWN 5409484-00007 K

CHK	CHANGE NO.	REV

REVISIONS

J. RINALDIS

DRN. T. QUILLIN DATE 7SEP71
CHK'D. J. FLEMING DATE 8SEP71
ENG. P. SVENDSEN DATE 8SEP71
PROJ. ENG. P. SVENDSEN DATE 8SEP71
PROD. P. FAZI DATE 9SEP71

NEXT HIGHER ASSY D-UA-H737-0-0

SCALE NONE

SHEET 1 OF 1

[redacted] EQUIPMENT CORPORATION
MAYNARD MASSACHUSETTS

TITLE 8 TO 20V REGULATOR

SIZE D CODE IA NUMBER 5409484-0-0 REV. K

DIST.

95

"THIS DRAWING AND SPECIFICATIONS, HEREIN, ARE THE PROPERTY OF DIGITAL EQUIPMENT CORPORATION AND SHALL NOT BE REPRODUCED OR COPIED OR USED IN WHOLE OR IN PART AS THE BASIS FOR THE MANUFACTURE OR SALE OF ITEMS WITHOUT WRITTEN PERMISSION. COPYRIGHT © DIGITAL EQUIPMENT CORPORATION"

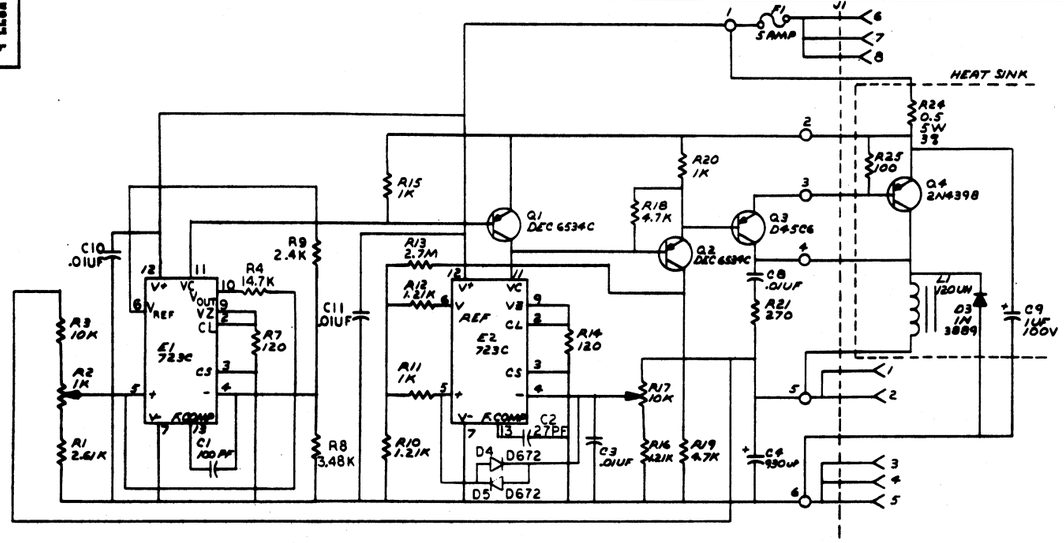

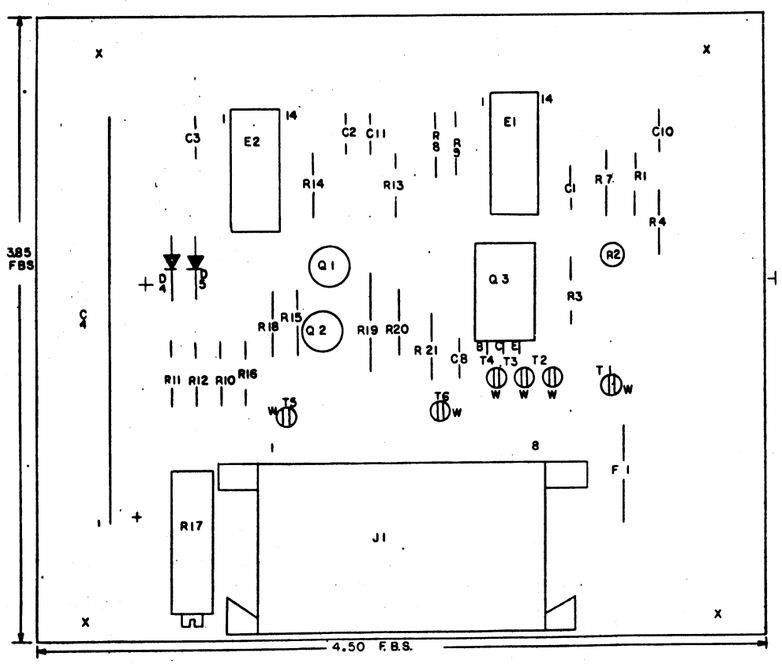

QTY	REF DESIGNATION	DESCRIPTION	PART NO	
4		WASHER, LOCK SPRING	9007801	69
A/R		WIRE #18 AWG STRD (WHT)	9107360-99	68
A/R		WIRE #18 AWG STRD (GRY)	9107360-88	67
A/R		WIRE #18 AWG STRD (VIO)	9107360-77	66
A/R		WIRE #18 AWG STRD (BLU)	9107360-66	65
A/R		WIRE #18 AWG STRD (GRN)	9107360-55	64
A/R		WIRE #18 AWG STRD (YEL)	9107360-44	63
2		#2 INTERNAL LOCK WASHER	9006631	62
2		TIE WRAPS	9007031	61
1		WASHER FLAT 3/16	9006666	60
1		#10-32 HEX NUT	9006364	59
2		2/56 x 3/16" SCREW	9006080-4	58
2		6/32 x 3/8" PAN HD SCREW	9006023-1	57
1		10-32 x 1" TRUSS HD SCREW	9006077-3	56
1		#10 INTERNAL LOCK WASHER	9006635	55
1		BUSHING (DIODE)	9008441	54
1		SOLDER LUG	9008150	53
4		#6-20 x 3/8 SELF TAPPING SCREW	9008407-01	52
1		THERMAL INSULATOR	9008619	51
2		THERMAL INSULATOR	9008624	50
2	TS-1, TS-2	STAND OFF (STUD TYPE)	9009060	49
1		TRANSISTOR SOCKET	1210130	48
1	C9	CAP 1UF 100V	1005507	47
1	R24	RES. 0.5 3% 5W	1310508	46
1	R25	RES. 100 5% 1/4W	1300229	45
1	Q4	TRANSISTOR 2N4398	1505870	44
1	L1	120UH CHOKE	1610573	43
1	D3	DIODE 1N3889	1110491	42
1		HEAT SINK	D-DA-5509595-0-0	41
6		SPLIT LUGS	9006735	40
A/R		THERMAL COMPOUND	9008268	39
1	F1	FUSE 5 AMPS	1209070	38
2		WASHER NYLON	9006707	37
8		CONNECTOR PINS	1209456	36
2		EYELET	9006732	35
2		WASHER INT TOOTH #6	9006633	34
2	E1, 2	DIP REGULATOR 723C	1910415	33
1	Q3	TRANSISTOR D45C6	1510414	32
2	Q1, 2	TRANSISTOR DEC 6534C	1503409-02	31
				30
1	R21	RES. 270 1/4W 5%	1301972	29
1	R19	RES. 4.7K 1/2 W 5%	1300445	28
1	R18	RES. 4.7K 1/4W 5%	1300467	27
1	R17	RES. VARIABLE 10K 3/8 W 10%	1309143-10	26
1	R13	RES 2.7M 1/4 W 5%	1309680	25
3	R11, 15, 20	RES 1K 1/4 W 5%	1300365	24
3	R10, 12, 16	RES 1.21K 1/8W 1% MF	1302871	23
1	R8	RES 3.48K 1/8W 1% MF	1305114	22
2	R7, 14	RES 120 1/4 W 5%	1300297	21
				20
1	R9	RES 2.4 K 1/4W 5%	1303177	19
1	R4	RES 14.7K 1/8 W 1% MF	1302941	18
1	R3	RES 10K 1/8W 1% MF	1303312	17
1	R2	RES VARIABLE 1K 1/2 W	1309150-03	16
1	R1	RES 2.61K 1/8W 1% MF	1303303	15
1	J1	AMP 8 PIN CONNECTOR (MATE-LOK)	1209340-00	14
2	D4, D5	DIODE D672	1105275	13
				12
				11
				10
1	C4	CAP. 930UF 30V, -10 +75%	1010509	9
4	C3, 8, 10, 11	CAP. .01UF 100V 20% AXIAL	1001610	8
1	C2	CAP. 27 PF 100 V 5% MICA	1001739	7
1	C1	CAP. 100PF 100 V 5% DM.	1000016	6
1		ETCHED CIRCUIT BOARD	5009483	5
		MODULE ECO HISTORY	B-MH-5409484-0-6	4
		ASSY DRILLING HOLE LAYOUT	D-MH-5409484-0-5	3
		X-Y COORDINATE HOLE LOCATION	M-CO-5409484-0-4	2
		8 TO 20 V REGULATOR	E-ZA-5409484-0-0	1

REVISIONS					
CHK	CHANGE NO.	REV.	5409484-00006 J	5409484-00007 K	
	00005	H			
J. Rinaldi	2-19-75		J. RINALDIS	J. RINALDIS	
J. RINALDIS			7-15-75	9-OCT-75	
J. Rinaldis	5/19/75		J. Rinaldis 7/21/75	11/4/75	

DWN	J. Chaten	3-11-75
CHK		3/12/75
MFG		4/3/75
PROJ		4/3/75

TITLE: 8 TO 20V REGULATOR

SIZE: D | CODE: CS | NUMBER: 5409484-0-1 | REV.: K

SCALE | SHEET 1 OF 1 | DIST.

96

RK05LH.H
RUN NAME

WRP288.V22(22) 11/06/73

11-FEB-74 23:14 PAGE 1

RUN NAME	A/P	PIN NAME	ORDER PIN	BAY - ORDER	Q	DRAW RV PG Y	X	Z	REMARKS	LENGTH	EXCEPTIONS	RUN NUMBER
+15VDC	H	A05D2		1-01		D05-9		1				1
+15VDC	H	A06D1		1-02		D05-9						1
+15VDC				1						2-6/8		1
+5VDC BUS8	H	B06A1		1-01		D05-9		1				2
+5VDC BUS8	H	B06A2		1-02		D05-9						2
+5VDC BUS8				1						2-6/8		2
12V	H	A01M2		1-01		D05-1		1				3
12V	H	B03A1		1-02		D05-1					3	3
12V				1						5-2/8		3
AC LO*	H	A04R2		1-01		D05-8		1				4
AC LO*	H	B08F1		1-02		D05-8		2				4
AC LO*	H	B07F1		1-03		D05-8						4
AC LO*				1						9-0/8		4
ADDR ACCEPTED	L	A02S1		1-01		D05-5		1				5
ADDR ACCEPTED	L	A03N1		1-02		D05-5						5
ADDR ACCEPTED				1						3-6/8		5
ADDRESS INVALID	L	B02F1		1-01		D05-2		1				6
ADDRESS INVALID	L	B03E1		1-02		D05-2						6
ADDRESS INVALID				1						2-7/8		6
BLOWER MTR RELAY DR	H	A04A1		1-01		D05-9		1				7
BLOWER MTR RELAY DR	H	B06N1		1-02		D05-9						7
BLOWER MTR RELAY DR				1						8-2/8		7
BUS ADDR ACCEPTED	L	A02R1		1-01		D05-4		1				8
BUS ADDR ACCEPTED	L	A07R2		1-02		D05-4		2				8
BUS ADDR ACCEPTED	L	A08R2		1-03		D05-4						8
BUS ADDR ACCEPTED				1						9-2/8		8
BUS ADDR INVALID	L	A08T2		1-01		D05-4		2				9
BUS ADDR INVALID	L	A07T2		1-02		D05-4		1				9
BUS ADDR INVALID	L	B02A1		1-03		D05-4						9
BUS ADDR INVALID				1						10-2/8		9
BUS FILE READY	L	A04M1		1-01		D05-7		1				10
BUS FILE READY	L	B08N1		1-02		D05-7		2				10
BUS FILE READY	L	B07N1		1-03		D05-7						10
BUS FILE READY				1						10-7/8		10

RUN NAME	A/P	PIN NAME	ORDER PIN	BAY - ORDER	Q	DRAW RV PG Y	X	Z	REMARKS	LENGTH	EXCEPTIONS	RUN NUMBER
BUS INDEX PUL	L	A02K1		1-01		D05-3		1				11
BUS INDEX PUL	L	B08M1		1-02		D05-3		2				11
BUS INDEX PUL	L	B07M1		1-03		D05-3						11
BUS INDEX PUL				1						10-7/8		11
BUS R/W/S READY	L	A02M1		1-01		D05-4		1				12
BUS R/W/S READY	L	A07H2		1-02		D05-4		2				12
BUS R/W/S READY	L	A08H2		1-03		D05-4						12
BUS R/W/S READY				1						9-6/8		12
BUS SECTOR ADDR	L	A02H1		1-01		D05-3		1				13
BUS SECTOR ADDR	L	B08L1		1-02		D05-3		2				13
BUS SECTOR ADDR	L	B07L1		1-03		D05-3						13
BUS SECTOR ADDR				1						11-0/8		13
BUS SECTOR ADDR 1	L	A02J1		1-01		D05-4		1				14
BUS SECTOR ADDR 1	L	A07P2		1-02		D05-4		2				14
BUS SECTOR ADDR 1	L	A08P2		1-03		D05-4						14
BUS SECTOR ADDR 1				1						9-6/8		14
BUS SECTOR ADDR 2	L	A02L1		1-01		D05-4		1				15
BUS SECTOR ADDR 2	L	B07K2		1-02				2				15
BUS SECTOR ADDR 2	L	B08K2		1-03		D05-4						15
BUS SECTOR ADDR 2				1						10-2/8		15
BUS SECTOR ADDR 3	L	A02P1		1-01		D05-4		1				16
BUS SECTOR ADDR 3	L	B07J1		1-02		D05-4		2				16
BUS SECTOR ADDR 3	L	B08J1		1-03		D05-4						16
BUS SECTOR ADDR 3				1						10-2/8		16
BUS SECTOR PULSE	L	A02F1		1-01		D05-3		1				17
BUS SECTOR PULSE	L	B08N2		1-02		D05-3		2				17
BUS SECTOR PULSE	L	B07N2		1-03		D05-3						17
BUS SECTOR PULSE				1						11-2/8		17
BUS SEEK INCOMPLETE	L	A02N1		1-01		D05-4		1				18
BUS SEEK INCOMPLETE	L	A07S2		1-02		D05-4		2				18
BUS SEEK INCOMPLETE	L	A08S2		1-03		D05-4						18
BUS SEEK INCOMPLETE				1						9-4/8		18
BUS WR PROTECT STATUS	H	B04U1		1-01		D05-8		1				19
BUS WR PROTECT STATUS	H	B07P1		1-02		D05-8		2				19
BUS WR PROTECT STATUS	H	B08P1		1-03		D05-8						19
BUS WR PROTECT STATUS				1						8-4/8		19

RUN NAME	A/P	PIN NAME	ORDER PIN	BAY - ORDER	Q	DRAW RV PG Y	X	Z	REMARKS	LENGTH	EXCEPTIONS	RUN NUMBER
BUS WRITE CK	H	B04P1		1-01		D05-8		1				20
BUS WRITE CK	H	B07K1		1-02		D05-8		2				20
BUS WRITE CK	H	B08K1		1-03		D05-8						20
BUS WRITE CK				1						8-4/8		20
COS POSITION	H	A05U1		1-01		D05-9		1				21
COS POSITION	H	B06B1		1-02		D05-9						21
COS POSITION				1						4-1/8		21
COUNT PULSE FWD	H	A05A1		1-01		D05-5		1				22
COUNT PULSE FWD	H	B03K1		1-02		D05-5						22
COUNT PULSE FWD				1						7-6/8		22
COUNT PULSE REV	H	A05C1		1-01		D05-5		1				23
COUNT PULSE REV	H	B03F1		1-02		D05-5						23
COUNT PULSE REV				1						7-0/8		23
CYC ADDR 0	L	A07K1		1-01		D05-5		2				24
CYC ADDR 0	L	A08K1		1-02		D05-5		1				24
CYC ADDR 0	L	B03L1		1-03		D05-5						24
CYC ADDR 0				1						10-5/8		24
CYC ADDR 1	L	A07D1		1-01		D05-6		2				25
CYC ADDR 1	L	A08D1		1-02		D05-6		1				25
CYC ADDR 1	L	B03N1		1-03		D05-6						25
CYC ADDR 1				1						11-3/8		25
CYC ADDR 2	L	A08L1		1-01		D05-6		2				26
CYC ADDR 2	L	A07L1		1-02		D05-6		1				26
CYC ADDR 2	L	B03P1		1-03		D05-6						26
CYC ADDR 2				1						10-5/8		26
CYC ADDR 3	L	A07C1		1-01		D05-6		2				27
CYC ADDR 3	L	A08C1		1-02		D05-6		1				27
CYC ADDR 3	L	B03M1		1-03		D05-6						27
CYC ADDR 3				1						11-3/8		27
CYC ADDR 4	L	A07F1		1-01		D05-6		2				28
CYC ADDR 4	L	A08F1		1-02		D05-6		1				28
CYC ADDR 4	L	B03R1		1-03		D05-6						28
CYC ADDR 4				1						11-3/8		28
CYC ADDR 5	L	A07J1		1-01		D05-6		2				29
CYC ADDR 5	L	A08J1		1-02		D05-6		1				29
CYC ADDR 5	L	B03U1		1-03		D05-6						29
CYC ADDR 5				1						11-4/8		29

RUN NAME	A/P	PIN NAME	ORDER PIN	BAY - ORDER	Q	DRAW	RV	PG	Y	X	Z	REMARKS	LENGTH	EXCEPTIONS	RUN NUMBER
CYC ADDR 6	L	A08E1		1-01				D05-6			2				30
CYC ADDR 6	L	A07E1		1-02				D05-6			1				30
CYC ADDR 6	L	B03V1		1-03				D05-6							30
CYC ADDR 6				1									12-6/8		30
CYC ADDR 7	L	A07H1		1-01				D05-6			2				31
CYC ADDR 7	L	A08H1		1-02				D05-6			1				31
CYC ADDR 7	L	B03S1		1-03				D05-6							31
CYC ADDR 7				1									11-3/8		31
DC LO«	H	A04D1		1-01				D05-8			1				32
DC LO«	H	B08F2		1-02				D05-8			2				32
DC LO«	H	B07F2		1-03				D05-8							32
DC LO«				1									11-1/8		32
DIFF 1	L	A03A1		1-01				D05-7			1				33
DIFF 1	L	B05N2		1-02				D05-7							33
DIFF 1				1									8-4/8		33
DIFF 16	L	A03E1		1-01				D05-7			1				34
DIFF 16	L	B05T2		1-02				D05-7							34
DIFF 16				1									8-4/8		34
DIFF 2	L	A03B1		1-01				D05-7			1				35
DIFF 2	L	B05P2		1-02				D05-7							35
DIFF 2				1									8-2/8		35
DIFF 4	L	A03D1		1-01				D05-7			1				36
DIFF 4	L	B05R2		1-02				D05-7							36
DIFF 4				1									8-2/8		36
DIFF 8	L	A03C1		1-01				D05-7			1				37
DIFF 8	L	B05S2		1-02				D05-7							37
DIFF 8				1									8-4/8		37
DISK RELAY DR	H	A04M1		1-01				D05-8			1				38
DISK RELAY DR	H	B06P1		1-02				D05-8							38
DISK RELAY DR				1									6-6/8		38
DR UNLOCKING SOLENOID	L	A06P1		1-01				D05-8			1				39
DR UNLOCKING SOLENOID	L	B04V1		1-02				D05-8							39
DR UNLOCKING SOLENOID				1									7-2/8		39
FAULT IND	H	A04N2		1-01				D05-8			1				40
FAULT IND	H	A06M1		1-02				D05-8							40
FAULT IND				1									4-0/8		40

RUN NAME	A/P	PIN NAME	ORDER PIN	BAY - ORDER	Q	DRAW	RV	PG	Y	X	Z	REMARKS	LENGTH	EXCEPTIONS	RUN NUMBER
FWD	H	B03J1		1-01				D05-5			1				41
FWD	H	B05J2		1-02				D05-5							41
FWD				1									4-2/8		41
GND 01		A01C2		1-01							1				42
GND 01		A01T1		1-02							2				42
GND 01		B01C2		1-03							1				42
GND 01		B01T1		1-04											42
GND 01				1									13-6/8		42
GND 02		A02C2		1-01							1				43
GND 02		A02T1		1-02							2				43
GND 02		B02C2		1-03							1				43
GND 02		B02T1		1-04											43
GND 02				1									13-6/8		43
GND 03		A03C2		1-01							1				44
GND 03		A03T1		1-02							2				44
GND 03		B03C2		1-03							1				44
GND 03		B03T1		1-04											44
GND 03				1									13-6/8		44
GND 04		A04C2		1-01							1				45
GND 04		A04T1		1-02							2				45
GND 04		B04C2		1-03							1				45
GND 04		B04T1		1-04											45
GND 04				1									13-6/8		45
GND 05		A05C2		1-01							1				46
GND 05		A05T1		1-02							2				46
GND 05		B05C2		1-03							1				46
GND 05		B05T1		1-04											46
GND 05				1									13-6/8		46
GND 06		A06C2		1-01							1				47
GND 06		A06T1		1-02							2				47
GND 06		B06C2		1-03				D05-9			1				47
GND 06		B06C1		1-04				D05-9			2				47
GND 06		B06E1		1-05				D05-9			1				47
GND 06		B06J1		1-06				D05-9			2				47
GND 06		B06T1		1-07				D05-9			1				47
GND 06		B06S1		1-08				D05-9							47
GND 06				1									23-6/8		47

RK05Lab RUN NAME	WRP288.V22(22) 11/06/73 A/P	PIN NAME	ORDER PIN	BAY - ORDER	DRAW RV PG Y	X	Z	REMARKS	LENGTH	EXCEPTIONS	RUN NUMBER
GND 07		A07B2		1-01			1				48
GND 07		A07C2		1-02			2				48
GND 07		A07N1		1-03			1				48
GND 07		A07P1		1-04			2				48
GND 07		A07R1		1-05			1				48
GND 07		A07S1		1-06			2				48
GND 07		A07T1		1-07			1				48
GND 07		A07V1		1-08			2				48
GND 07		B07B2		1-09			1				48
GND 07		B07C2		1-10			2				48
GND 07		B07D1		1-11			1				48
GND 07		B07E1		1-12			2				48
GND 07		B07T1		1-13			1				48
GND 07		B07V2		1-14			2				48
GND 08		A08B2		1-01			1		37-2/8		49
GND 08		A08C2		1-02			2				49
GND 08		A08N1		1-03			1				49
GND 08		A08P1		1-04			2				49
GND 08		A08R1		1-05			1				49
GND 08		A08S1		1-06			2				49
GND 08		A08T1		1-07			1				49
GND 08		A08V1		1-08			2				49
GND 08		B08B2		1-09			1				49
GND 08		B08C2		1-10			2				49
GND 08		B08D1		1-11			1				49
GND 08		B08E1		1-12			2				49
GND 08		B08T1		1-13			1				49
GND 08		B08V2		1-14			2				49
GOOD STROBE	L	B02E1		1-01	D05-5		1		37-2/8		50
GOOD STROBE	L	B03D1		1-02	D05-5						50
GOOD STROBE				1	D05-5						50
HEAD SELECT	L	A01P1		1-01	D05-1		1		3-6/8		51
HEAD SELECT	L	B07M2		1-02	D05-1		2				51
HEAD SELECT	L	B08M2		1-03	D05-1						51
HEAD SELECT				1	D05-1						51
HIGH DENSITY	L	A01R2		1-01	D05-4		1		11-3/8		52
HIGH DENSITY	L	B07P2		1-02	D05-4		2				52
HIGH DENSITY	L	B08P2		1-03	D05-4						52
HIGH DENSITY				1	D05-4				10-3/8		52

RK05LAB RUN NAME	WRP288.V22(22) 11/06/73 A/P	PIN NAME	ORDER PIN	BAY - ORDER	DRAW RV PG Y	X	Z	REMARKS	LENGTH	EXCEPTIONS	RUN NUMBER
HOME	L	A04R1		1-01	D05-7		2				53
HOME	L	B03B1		1-02	D05-7		1				53
HOME	L	B06F1		1-03	D05-7						53
HOME				1	D05-7				9-6/8		53
INDEX PULSE	L	A02R2		1-01	D05-3		1				54
INDEX PULSE	L	A04J1		1-02	D05-3						54
INDEX PULSE				1	D05-3				4-1/8		54
INDEX/SECTOR	L	B02D1		1-01	D05-5		1				55
INDEX/SECTOR	L	B04H2		1-02	D05-5						55
INDEX/SECTOR				1	D05-5				4-4/8		55
INNER LIMIT	H	A05B1		1-01	D05-2		1				56
INNER LIMIT	H	A03U1		1-02	D05-2		2				56
INNER LIMIT	H	B02J1		1-03	D05-2						56
INNER LIMIT				1	D05-2				11-0/8		56
INTERLOCK	L	A04H1		1-01	D05-7		1				57
INTERLOCK	L	A06R1		1-02	D05-7						57
INTERLOCK				1	D05-7				4-3/8		57
LIMIT	H	A05K1		1-01	D05-9		1				58
LIMIT	H	B06H1		1-02	D05-9						58
LIMIT				1	D05-9				6-0/8		58
LOAD HEADS	L	B03C1		1-01	D05-6		1				59
LOAD HEADS	L	B04C1		1-02	D05-6						59
LOAD HEADS				1	D05-6				3-4/8		59
LOAD IND	H	A04L1		1-01	D05-8		1				60
LOAD IND	H	A06A1		1-02	D05-8						60
LOAD IND				1	D05-8				4-3/8		60
LOAD SW	L	A06K1		1-01	D05-7		1				61
LOAD SW	L	B04D1		1-02	D05-7						61
LOAD SW				1	D05-7				6-0/8		61
MOVE	L	A03L1		1-01	D05-2		1				62
MOVE	L	B02P1		1-02	D05-2						62
MOVE				1	D05-2				6-6/8		62
NO PROTECT	L	A01N2		1-01	D05-1		1				63
NO PROTECT	L	B04H1		1-02	D05-1						63
NO PROTECT				1	D05-1				6-2/8		63

RUN NAME	A/P	PIN NAME	ORDER PIN	BAY - ORDER	Q	DRAW	RV	PG	Y	X	Z	REMARKS	LENGTH	EXCEPTIONS	RUN NUMBER
ON	L	A02A1		1-01			D05-5				1				64
ON	L	A03M1		1-02			D05-5								64
ON				1									4-6/8		64
OUTER LIMIT	H	A03K1		1-01			D05-6				2				65
OUTER LIMIT	H	A04K1		1-02			D05-6				1				65
OUTER LIMIT	H	A05D1		1-03			D05-6								65
OUTER LIMIT				1									7-4/8		65
POWER AMP DR	H	B05U2		1-01			D05-9				1				66
POWER AMP DR	H	B06M1		1-02			D05-9								66
POWER AMP DR				1									4-0/8		66
PROTECT IND	H	A06C1		1-01			D05-8				1				67
PROTECT IND	H	B04U2		1-02			D05-8								67
PROTECT IND				1									8-2/8		67
PWR SEC XMSOUR	H	A02D1		1-01			D05-2				1				68
PWR SEC XMSOUR	H	B06K1		1-02			D05-2								68
PWR SEC XMSOUR				1									8-2/8		68
R/W/S READY	H	A03P1		1-01			D05-5				1				69
R/W/S READY	H	B04J1		1-02			D05-5				2				69
R/W/S READY	H	B02L1		1-03			D05-5								69
R/W/S READY				1									10-0/8		69
R/W/S READY	L	A01P2		1-01			D05-1				1				70
R/W/S READY	L	B02K1		1-02			D05-1								70
R/W/S READY				1									5-4/8		70
READ CLOCK	L	A01F2		1-01			D05-2				1				71
READ CLOCK	L	B07S1		1-02			D05-2				2				71
READ CLOCK	L	B08S1		1-03			D05-2								71
READ CLOCK				1									11-4/8		71
READ DATA	L	A01E2		1-01			D05-2				1				72
READ DATA	L	B07S2		1-02			D05-2				2				72
READ DATA	L	B08S2		1-03			D05-2								72
READ DATA				1									11-7/8		72
READ GATE	L	A01K2		1-01			D05-1				1				73
READ GATE	L	B08R1		1-02			D05-1				2				73
READ GATE	L	B07R1		1-03			D05-1								73
READ GATE				1									11-3/8		73

RUN NAME	A/P	PIN NAME	ORDER PIN	BAY - ORDER	Q	DRAW	RV	PG	Y	X	Z	REMARKS	LENGTH	EXCEPTIONS	RUN NUMBER
READ IND	H	A02E2		1-01			D05-9				1				74
READ IND	H	A06J1		1-02			D05-9								74
READ IND				1									5-2/8		74
READY	H	A02C1		1-01			D05-3				1				75
READY	H	A04U1		1-02			D05-3								75
READY				1									5-6/8		75
READY IND	H	A06B1		1-01			D05-8				1				76
READY IND	H	B04N1		1-02			D05-8								76
READY IND				1									8-0/8		76
RESTORE	H	A02B1		1-01			D05-4				1				77
RESTORE	H	A03J1		1-02			D05-4								77
RESTORE				1									3-7/8		77
RESTORE	L	A08M1		1-01			D05-2				2				78
RESTORE	L	A07M1		1-02			D05-2				1				78
RESTORE	L	B02N1		1-03			D05-2								78
RESTORE				1									10-2/8		78
REV	H	B03M1		1-01			D05-5				1				79
REV	H	B05K2		1-02			D05-5								79
REV				1									4-4/8		79
RK-11D	L	A08U1		1-01							2				80
RK-11D	L	A07U1		1-02							1				80
RK-11D	L	B02U1		1-03											80
RK-11D				1									10-2/8		80
RTZ	L	A03F1		1-01			D05-2				1				81
RTZ	L	B02C1		1-02			D05-2								81
RTZ				1									6-0/8		81
RUN SW	L	A06L1		1-01			D05-7				1				82
RUN SW	L	B04L1		1-02			D05-7								82
RUN SW				1									6-6/8		82
SECTOR	L	A02B2		1-01			D05-9				1				83
SECTOR	L	B04K1		1-02			D05-9								83
SECTOR				1									5-6/8		83
SECTOR/INDEX RAW	H	A02E1		1-01			D05-2				1				84
SECTOR/INDEX RAW	H	B06L1		1-02											84
SECTOR/INDEX RAW				1									8-4/8		84

RUN NAME	A/P	PIN NAME	ORDER PIN	BAY - ORDER	Q	DRAW RV PG Y	X	Z	REMARKS	LENGTH	EXCEPTIONS	RUN NUMBER
SEEK DONE IND	H	A02V1		1-01		D05-5		1				85
SEEK DONE IND	H	A06F1		1-02		D05-5						85
SEEK DONE IND				1						5-7/8		85
SEL/WRITE PROTECT SET	L	B02R1		1-01		D05-5		1				86
SEL/WRITE PROTECT SET	L	B04B1		1-02		D05-5						86
SEL/WRITE PROTECT SET				1						5-2/8		86
SELECT	H	A01S2		1-01		D05-2		2				87
SELECT	H	A04S1		1-02		D05-2		1				87
SELECT	H	B02V2		1-03		D05-2						87
SELECT				1						11-0/8		87
SELECT 1	L	A08J2		1-01		D05-3		2				88
SELECT 1	L	A07J2		1-02		D05-3		1				88
SELECT 1	L	B02R2		1-03		D05-3						88
SELECT 1				1						11-1/8		88
SELECT 2	L	A08K2		1-01		D05-3		2				89
SELECT 2	L	A07K2		1-02		D05-3		1				89
SELECT 2	L	B02S2		1-03		D05-3						89
SELECT 2				1						11-1/8		89
SELECT 3	L	A08L2		1-01		D05-3		2				90
SELECT 3	L	A07L2		1-02		D05-3		1				90
SELECT 3	L	B02T2		1-03		D05-3						90
SELECT 3				1						11-1/8		90
SELECT 4	L	A08M2		1-01		D05-3		2				91
SELECT 4	L	A07M2		1-02		D05-3		1				91
SELECT 4	L	B02U2		1-03		D05-3						91
SELECT 4				1						11-1/8		91
SELECT/READY	L	A01H2		1-01		D05-1		1				92
SELECT/READY	L	A04V1		1-02				2				92
SELECT/READY	L	B02H1		1-03		D05-1						92
SELECT/READY				1						9-6/8		92
SELECTED READ GATE	H	A01B1		1-01		D05-9		1				93
SELECTED READ GATE	H	A02F2		1-02		D05-9						93
SELECTED READ GATE				1						3-7/8		93
SELECTED WRITE GATE	H	A01V1		1-01		D05-1		1				94
SELECTED WRITE GATE	H	A02V2		1-02		D05-1						94
SELECTED WRITE GATE				1						3-6/8		94

RUN NAME	A/P	PIN NAME	ORDER PIN	BAY - ORDER	Q	DRAW RV PG Y	X	Z	REMARKS	LENGTH	EXCEPTIONS	RUN NUMBER
SET UNSAFE	L	A01U2		1-01		D05-1		1				95
SET UNSAFE	L	B04A1		1-02		D05-1						95
SET UNSAFE				1						4-7/8		95
SIN POSITION	H	A05N1		1-01		D05-9		1				96
SIN POSITION	H	B06D1		1-02		D05-9						96
SIN POSITION				1						5-2/8		96
STROBE	L	B02V1		1-01		D05-2		1				97
STROBE	L	B07H1		1-02		D05-2		2				97
STROBE	L	B08H1		1-03		D05-2						97
STROBE				1						10-2/8		97
UNSAFE	L	A01L2		1-01		D05-1		1				98
UNSAFE	L	A04V2		1-02		D05-1						98
UNSAFE				1						5-2/8		98
WRITE DATA + CLK	H	A01J1		1-01		D05-1		1				99
WRITE DATA + CLK	H	A07F2		1-02		D05-1		2				99
WRITE DATA + CLK	H	A08F2		1-03		D05-1						99
WRITE DATA + CLK				1						10-0/8		99
WRITE GATE	L	A01J2		1-01		D05-1		1				100
WRITE GATE	L	B07L2		1-02		D05-1		2				100
WRITE GATE	L	B08L2		1-03		D05-1						100
WRITE GATE				1						10-7/8		100
WRITE PROTECT SET	L	B02S1		1-01		D05-3		1				101
WRITE PROTECT SET	L	B07R2		1-02		D05-3		2				101
WRITE PROTECT SET	L	B08R2		1-03		D05-3						101
WRITE PROTECT SET				1						9-4/8		101
WRITE SW OFF	L	A06N1		1-01		D05-7		1				102
WRITE SW OFF	L	B04F1		1-02		D05-7						102
WRITE SW OFF				1						6-0/8		102
WRITE SW ON	L	A06M1		1-01		D05-7		1				103
WRITE SW ON	L	B04E1		1-02		D05-7						103
WRITE SW ON				1						6-0/8		103
WRITING IND	H	A02U1		1-01		D05-5		1				104
WRITING IND	H	A06E1		1-02		D05-5						104
WRITING IND				1						5-7/8		104

```
SPOOLER RUNTIME 7 SECONDS, 42 KCS, 251 DISK READS, 3 DISK WRITES, 24 PAGES
**END** USER DRAFTING #4 [202,202] JOB  RKOSLB SEQ, 840 DATE 12-FEB-75 15:12:52 MONITOR DDC KI#567 506BSE+DATE75  **END**
```

RUN NAME	A/P	PIN NAME	ORDER PIN	RAY - ORDER	O	DRAW RV PG Y	X	Z	REMARKS	LENGTH	EXCEPTIONS	RUN NUMBER
+5V		A01A2		1-01 *	H	D02		2		P	HAND WIRE	1
+5V		A02A2		1-02 *	H	D02		1		P	HAND WIRE	1
+5V		A03A2		1-03 *	H	D02		2		P	HAND WIRE	1
+5V		A04A2		1-04 *	H	D02		1		P	HAND WIRE	1
+5V		A03H2		1-05 *	H	D02		2		P	HAND WIRE	1
+5V		A03J2		1-06 *	H	D02		1		P	HAND WIRE	1
+5V		A03K2		1-07 *	H	D02		2		P	HAND WIRE	1
+5V		A03L2		1-08 *	H	D02		1		P	HAND WIRE	1
+5V		A03M2		1-09 *	H	D02		2		P	HAND WIRE	1
+5V		B01A2		1-10 *	H	D02		1		P	HAND WIRE	1
+5V		B02A2		1-11 *	H	D02		2		P	HAND WIRE	1
+5V		B03R1		1-12 *	H	D02		1		P	HAND WIRE	1
+5V		B03A2		1-13 *	H	D02		2		P	HAND WIRE	1
+5V		B04A2		1-14 *	H	D02		1		P	HAND WIRE	1
+5V		C04A2		1-15 *	H	D01		2		P	HAND WIRE	1
+5V		C03A2		1-16 *	H	D01		1		P	HAND WIRE	1
+5V		C02A2		1-17 *	H	D01		2		P	HAND WIRE	1
+5V		C01A2		1-18 *	H	D01		1		P	HAND WIRE	1
+5V		D01A2		1-19 *	H	D01		2		P	HAND WIRE	1
+5V		D02A2		1-20 *	H	D01		1		P	HAND WIRE	1
+5V		D03A2		1-21 *	H	D01		2		P	HAND WIRE	1
+5V		D04A2		1-22 *	H	D01		1		P	HAND WIRE	1
+5V		E04A2		1-23 *	H	D01		2		P	HAND WIRE	1
+5V		E03A2		1-24 *	H	D01		1		P	HAND WIRE	1
+5V		E02A2		1-25 *	H	D01		2		P	HAND WIRE	1
+5V		E01A2		1-26 *	H	D01		1		P	HAND WIRE	1
+5V		F01A2		1-27 *	H	D01		2		P	HAND WIRE	1
+5V		F02A2		1-28 *	H	D01		1		P	HAND WIRE	1
+5V		F03A2		1-29 *	H	D01		2		P	HAND WIRE	1
+5V		F04A2		1-30 *	H	D01				P	HAND WIRE	1
+5V				1						89-0/0	N TO WHERE	1
												1
A TO NPR	H	F01R1		1-01 *	H	D01		1		P	HAND WIRE	2
A TO NPR	H	E03R2		1-02 *	H	D01		2		P	HAND WIRE	2
A TO NPR	H	F04R2		1-03 *	H	D01				P	N TO WHERE	2
A TO NPR				1						6-2/0		2
ADD ACK	H	F01J1		1-01 *	H	D01		1		P	HAND WIRE	3
ADD ACK	H	F02J1		1-02 *	H	D01				P	N TO WHERE	3
ADD ACK				1						2-6/0		3
A CNTRL RDY	H	B03R2		1-01 *		D02		1				4
A CNTRL RDY	H	F04S2		1-02 *	H	D01		2		P	HAND WIRE	4
A CNTRL RDY	H	E02S2		1-03 *	H	D01		1		P	HAND WIRE	4
A CNTRL RDY	H	E01S2		1-04 *	H	D01				P	N TO WHERE	4
A CNTRL RDY				1						16-4/0		4

RUN NAME	A/P	PIN NAME	ORDER PIN	RAY - ORDER	O	DRAW RV PG Y	X	Z	REMARKS	LENGTH	EXCEPTIONS	RUN NUMBER
BG 4 IN	H	B01E2		1-01 *		D02		1				5
BG 4 IN	H	C01S2		1-02 *		D01						5
BG 4 IN				1						6-0/0		5
BG 4 OUT	H	B06E2		1-01 *		D02		1				6
BG 4 OUT	H	C01T2		1-02 *		D01						6
BG 4 OUT				1						6-6/0		6
BG 5 IN	H	B01B1		1-01 *		D02		1				7
BG 5 IN	H	C01P2		1-02 *		D01						7
BG 5 IN				1						6-2/0		7
BG 5 OUT	H	B06B1		1-01 *		D02		1				8
BG 5 OUT	H	C01R2		1-02 *		D01						8
BG 5 OUT				1						7-0/0		8
BG 6 IN	H	B01A1		1-01 *		D02		1				9
BG 6 IN	H	C01M2		1-02 *		D01						9
BG 6 IN				1						6-2/0		9
BG 6 OUT	H	B04A1		1-01 *		D02		1				10
BG 6 OUT	H	C01M2		1-02 *		D01						10
BG 6 OUT				1						6-6/0		10
BG 7 IN	H	A01V1		1-01 *		D02		1				11
BG 7 IN	H	C01K2		1-02 *		D01						11
BG 7 IN				1						6-4/0		11
BG 7 OUT	H	A06V1		1-01 *		D02		1				12
BG 7 OUT	H	C01L2		1-02 *		D01						12
BG 7 OUT				1						7-2/0		12
BG IN	H	C01V2		1-01 *	H	D01		1		P	HAND WIRE	13
BG IN	H	C04V2		1-02 *	H	D01				P	N TO WHERE	13
BG IN				1						3-6/0		13
BG OUT	H	C01U2		1-01 *	H	D01		1		P	HAND WIRE	14
BG OUT	H	C04U2		1-02 *	H	D01				P	N TO WHERE	14
BG OUT				1						3-6/0		14
BP OUT	L	C01J2		1-01 *	H	D01		1		P	HAND WIRE	15
BP OUT	L	C04J2		1-02 *	H	D01				P	N TO WHERE	15
BP OUT				1						3-6/0		15

HMD2BP.V22(22) 11/06/73 — 1-MAY-74 — 19127 EXCEPTIONS

RK110.F RUN NAME	A/P	PIN NAME	ORDER PIN	BAY - ORDER	Q	DRAW	RV	PG	Y	X	Z	REMARKS	LENGTH		RUN NUMBER
RUS A03	L	B01H2	B04H2	1-01	H	D02					2				16
RUS A03	L	B04H2		1-02		D02					1		P	HAND WIRE TO HERE	16
RUS A03	L	D04D1		1-03		D01							3-4		16
RUS A03				1									11-3/8		16
RUS A04	L	B01H1		1-01	H	D02					2				17
RUS A04	L	B04H1		1-02		D02					1		P	HAND WIRE TO HERE	17
RUS A04	L	C04T2		1-03		D01									17
RUS A04				1									10-8/8		17
RUS A05	L	B01J2		1-01	H	D02					2				18
RUS A05	L	B04J2		1-02		D02					1		P	HAND WIRE TO HERE	18
RUS A05	L	C04B1		1-03		D01									18
RUS A05				1									9-6/8		18
RUS A06	L	B01J1		1-01	H	D02					2				19
RUS A06	L	B04J1		1-02		D02					1		P	HAND WIRE TO HERE	19
RUS A06	L	C04R1		1-03		D01									19
RUS A06				1									9-2/8		19
RUS A04	L	B01K2		1-01	H	D02					2				20
RUS A04	L	B04K2		1-02		D02					1		P	HAND WIRE TO HERE	20
RUS A04	L	C04P1		1-03		D01									20
RUS A04				1									9-2/8		20
RUS A05	L	B01K1		1-01	H	D02					2				21
RUS A05	L	B04K1		1-02		D02					1		P	HAND WIRE TO HERE	21
RUS A05	L	C04R2		1-03		D01									21
RUS A05				1									9-4/8		21
RUS A06	L	B01L2		1-01	H	D02					2				22
RUS A06	L	B04L2		1-02		D02					1		P	HAND WIRE TO HERE	22
RUS A06	L	C04M2		1-03		D01									22
RUS A06				1									8-6/8		22
RUS A07	L	B01L1		1-01	H	D02					2				23
RUS A07	L	B04L1		1-02		D02					1		P	HAND WIRE TO HERE	23
RUS A07	L	C04L1		1-03		D01									23
RUS A07				1									8-4/8		23
BUS A05	L	B01M2		1-01	H	D02					2				24
BUS A05	L	B04M2		1-02		D02					1		P	HAND WIRE TO HERE	24
BUS A05	L	C04K2		1-03		D01									24
BUS A05				1									8-4/8		24

HMD2BP.V22(22) 11/06/73 — 1-MAY-74 — 19127 EXCEPTIONS

RK110.F RUN NAME	A/P	PIN NAME	ORDER PIN	BAY - ORDER	Q	DRAW	RV	PG	Y	X	Z	REMARKS	LENGTH		RUN NUMBER
RUS A09	L	B01M1		1-01	H	D02					2				25
RUS A09	L	[illegible]		1-02		D02					1		P	HAND WIRE TO HERE	25
RUS A09	L	[illegible]		1-03		D02									25
RUS A09				1									8-6/8		25
RUS A10	L	[illegible]		1-01	H	D02					2				26
RUS A10	L	[illegible]		1-02		D02					1		P	HAND WIRE TO HERE	26
RUS A10	L	[illegible]		1-03		D01									26
RUS A10				1									8-6/8		26
RUS A11	L	B01N1	B04N1	1-01	H	D02					2				27
RUS A11	L	B04N1		1-02		D02					1		P	HAND WIRE TO HERE	27
RUS A11	L	D04P1		1-03		D01							3-2		27
RUS A11				1									10-7/8		27
RUS A12	L	B01P2		1-01	H	D02					2				28
RUS A12	L	B04P2		1-02		D02					1		P	HAND WIRE TO HERE	28
RUS A12	L	C04F1		1-03		D01									28
RUS A12				1									7-6/8		28
RUS A13	L	B01P1		1-01	H	D02					2				29
RUS A13	L	B04P1		1-02		D02					1		P	HAND WIRE TO HERE	29
RUS A13	L	C04F2		1-03		D01									29
RUS A13				1									8-8/8		29
RUS A14	L	B01R2		1-01	H	D02					1				30
RUS A14	L	B04R2		1-02		D02					2		P	HAND WIRE TO HERE	30
RUS A14	L	C04R1		1-03		D01									30
RUS A14				1									7-2/8		30
RUS A15	L	B01R1	B04R1	1-01	H	D02					2				31
RUS A15	L	B04R1		1-02		D02					1		P	HAND WIRE TO HERE	31
RUS A15	L	D04P1		1-03		D01							3-5		31
RUS A15				1									11-5/8		31
RUS A16	L	B01S2	B04S2	1-01	H	D02					1				32
RUS A16	L	B04S2	C04D1	1-02		D02					2		P	HAND WIRE TO HERE	32
RUS A16	L	C04D1	C01B1	1-03		D01					1		P	HAND WIRE TO HERE	32
RUS A16		C01D1		1-04											32
				1									11-8/8		32
RUS A17	L	B01S1	B04S1	1-01	H	D02					1				33
RUS A17	L	B04S1	C04E1	1-02		D02					2		P	HAND WIRE TO HERE	33
RUS A17	L	C04E1	C01E1	1-03		D01					1		P	HAND WIRE TO HERE	33
RUS A17				1-04											33
				1									11-8/8		33

RK110.F HND200.V22(22) 11/06/73 1-MAY-74 19:27 PAGE 5

RUN NAME	A/P	PIN NAME	ORDER PIN	BAY - ORDER	Q	DRAW RV PG Y	X	Z	REMARKS	LENGTH	EXCEPTIONS	RUN NUMBER
BUS AC LO	L	D02F1		1-01 *	1			1		3-6		34
BUS AC LO	L	B01F1		1-02 *	H			2		P	HAND WIRE	34
BUS AC LO	L	B04F1		1-03 *				1			TO HERE	34
BUS AC LO	L	A03R2		1-04 *								34
BUS AC LO				1						16-1/8		34
BUS BRSY	L	A01P2		1-01 *	H	D02		2		P	HAND WIRE	35
BUS BRSY	L	A04P2		1-02 *		D02		1			TO HERE	35
BUS BRSY	L	E04P2		1-03 *		D01						35
BUS BRSY				1						16-4/8		35
BUS BR 4	L	B04D2		1-01 *	H	D02		2		P	HAND WIRE	36
BUS BR 4	L	B01D2		1-02 *		D02		1			TO HERE	36
BUS BR 4	L	C01H2		1-03 *		D01						36
BUS BR 4				1						9-0/8		36
BUS BR 5	L	B04C1		1-01 *	H			2		P	HAND WIRE	37
BUS BR 5	L	B01C1		1-02 *		D02		1			TO HERE	37
BUS BR 5	L	C01F2		1-03 *		D01						37
BUS BR 5				1						9-2/8		37
BUS BR 6	L	A04U2		1-01 *	H	D02		2		P	HAND WIRE	38
BUS BR 6	L	A01U2		1-02 *		D02		1			TO HERE	38
BUS BR 6	L	C01E2		1-03 *		D01						38
BUS BR 6				1						9-6/8		38
BUS BR 7	L	A04T2		1-01 *	H	D02		2		P	HAND WIRE	39
BUS BR 7	L	A01T2		1-02 *		D02		1			TO HERE	39
BUS BR 7	L	C01D2		1-03 *		D01						39
BUS BR 7				1						9-6/8		39
BUS C0	L	B01U2	B04U2	1-01 *	H	D02		2		P	HAND WIRE	40
BUS C0	L	B04U2		1-02 *		D02		1		2-7	TO HERE	40
BUS C0	L	D04C1		1-03 *		D01						40
BUS C0				1						10-1/8		40
BUS C1	L	B01T2	B04T2	1-01 *	H	D02		2		P	HAND WIRE	41
BUS C1	L	B04T2		1-02 *		D02		1		4-7	TO HERE	41
BUS C1	L	E04R1		1-03 *		D01						41
BUS C1				1						14-1/8		41
BUS D EN	H	C04U1			H	D01				P	1-PIN RUN	42
BUS D00	L	A01C1		1-01 *	H	D02		2		P	HAND WIRE	43
BUS D00	L	A04C1		1-02 *		D02		1			TO HERE	43
BUS D00	L	C04D2		1-03 *		D01						43
BUS D00				1						11-6/8		43

RK110.F HND200.V22(22) 11/06/73 1-MAY-74 19:27 PAGE 6

RUN NAME	A/P	PIN NAME	ORDER PIN	BAY - ORDER	Q	DRAW RV PG Y	X	Z	REMARKS	LENGTH	EXCEPTIONS	RUN NUMBER
BUS D00 (1)	H	D01D2		1-01 *	H	D01		1		P	HAND WIRE	44
BUS D00 (1)	H	D03D2		1-02 *	H	D01		2		P	HAND WIRE	44
BUS D00 (1)	H	D04D2		1-03 *	H	D01				P	H TO WHERE	44
BUS D00 (1)				1						6-0/8		44
BUS D01	L	A01D2		1-01 *	H	D02		2		P	HAND WIRE	45
BUS D01	L	A04D2		1-02 *		D02		1			TO HERE	45
BUS D01	L	C04C1		1-03 *		D01						45
BUS D01				1						11-4/8		45
BUS D01 (1)	H	D01E2		1-01 *	H	D01		1		P	HAND WIRE	46
BUS D01 (1)	H	D03E2		1-02 *	H	D01		2		P	HAND WIRE	46
BUS D01 (1)	H	D04E2		1-03 *	H	D01				P	H TO WHERE	46
BUS D01 (1)				1						6-0/8		46
BUS D02	L	A01D1		1-01 *	H	D02		2		P	HAND WIRE	47
BUS D02	L	A04D1		1-02 *		D02		1			TO HERE	47
BUS D02	L	C04E2		1-03 *		D01						47
BUS D02				1						11-4/8		47
BUS D02 (1)	H	D01F2		1-01 *	H	D01		1		P	HAND WIRE	48
BUS D02 (1)	H	D03F2		1-02 *	H	D01		2		P	HAND WIRE	48
BUS D02 (1)	H	D04F2		1-03 *	H	D01				P	H TO WHERE	48
BUS D02 (1)				1						6-0/8		48
BUS D03	L	A01E2		1-01 *	H	D02		2		P	HAND WIRE	49
BUS D03	L	A04E2		1-02 *		D02		1			TO HERE	49
BUS D03	L	D04E1		1-03 *		D01						49
BUS D03				1						14-2/8		49
BUS D03 (1)	H	D01H2		1-01 *	H	D01		1		P	HAND WIRE	50
BUS D03 (1)	H	D03H2		1-02 *	H	D01		2		P	HAND WIRE	50
BUS D03 (1)	H	D04H2		1-03 *	H	D01				P	H TO WHERE	50
BUS D03 (1)				1						6-0/8		50
BUS D04	L	A01E1		1-01 *	H	D02		2		P	HAND WIRE	51
BUS D04	L	A04E1		1-02 *		D02		1			TO HERE	51
BUS D04	L	D04R1		1-03 *		D01						51
BUS D04				1						15-2/8		51
BUS D04 (1)	H	D01J2		1-01 *	H	D01		1		P	HAND WIRE	52
BUS D04 (1)	H	D03J2		1-02 *	H	D01		2		P	HAND WIRE	52
BUS D04 (1)	H	D04J2		1-03 *	H	D01				P	H TO WHERE	52
BUS D04 (1)				1						6-0/8		52

RUN NAME	A/P	PIN NAME	PIN ORDER	BAY - ORDER	G	DRAW	RV	PG	Y	X	Z	REMARKS	LENGTH	EXCEPTIONS	RUN NUMBER
RUB D05	L	A01F2	1-01	*	H	D02					2		P	HAND WIRE	53
RUB D05	L	A04F2	1-02	*		D02					1			TO HERE	53
RUB D05	L	C04H1	1-03	*		D01									53
RUB D05			1										11-6/8		53
RUB D05 (1)	H	D01K2	1-01	*	H	D01					1		P	HAND WIRE	54
RUB D05 (1)	H	D03K2	1-02	*	H	D01					2		P	HAND WIRE	54
RUB D05 (1)	H	D04K2	1-03	*	H	D01							P	H TO WHERE	54
RUB D05 (1)			1										6-8/8		54
RUB D06	L	A01F1	1-01	*	H	D02					2		P	HAND WIRE	55
RUB D06	L	A04F1	1-02	*		D02					1			TO HERE	55
RUB D06	L	C04K2	1-03	*		D01									55
RUB D06			1										11-6/8		55
RUB D06 (1)	H	D01L2	1-01	*	H	D01					1		P	HAND WIRE	56
RUB D06 (1)	H	D03L2	1-02	*	H	D01					2		P	HAND WIRE	56
RUB D06 (1)	H	D04L2	1-03	*	H	D01							P	H TO WHERE	56
RUB D06 (1)			1										6-8/8		56
RUB D07	L	A01H2	1-01	*	H	D02					2		P	HAND WIRE	57
RUB D07	L	A04H2	1-02	*		D02					1		3-6	TO HERE	57
RUB D07	L	C04J1	1-03	*		D01									57
RUB D07			1										11-7/8		57
RUB D07 (1)	H	D01M2	1-01	*	H	D01					1		P	HAND WIRE	58
RUB D07 (1)	H	D03M2	1-02	*	H	D01					2		P	HAND WIRE	58
RUB D07 (1)	H	D04M2	1-03	*	H	D01							P	H TO WHERE	58
RUB D07 (1)			1										6-8/8		58
RUB D08	L	A01H1	1-01	*	H	D02					2		P	HAND WIRE	59
RUB D08	L	A04H1	1-02	*		D02					1			TO HERE	59
RUB D08	L	C04M2	1-03	*		D01									59
RUB D08			1										12-2/8		59
RUB D08 (1)	H	D01N2	1-01	*	H	D01					1		P	HAND WIRE	60
RUB D08 (1)	H	D03N2	1-02	*	H	D01					2		P	HAND WIRE	60
RUB D08 (1)	H	D04M2	1-03	*	H	D01							P	H TO WHERE	60
RUB D08 (1)			1										6-8/8		60
RUB D09	L	A01J2	1-01	*	H	D02					2		P	HAND WIRE	61
RUB D09	L	A04J2	1-02	*		D02					1			TO HERE	61
RUB D09	L	C04M1	1-03	*		D01									61
RUB D09			1										12-8/8		61

RUN NAME	A/P	PIN NAME	PIN ORDER	BAY - ORDER	G	DRAW	RV	PG	Y	X	Z	REMARKS	LENGTH	EXCEPTIONS	RUN NUMBER
RUB D09 (1)	H	D01P2	1-01	*	H	D01					1		P	HAND WIRE	62
RUB D09 (1)	H	D03P2	1-02	*	H	D01					2		P	HAND WIRE	62
RUB D09 (1)	H	D04P2	1-03	*	H	D01							P	H TO WHERE	62
RUB D09 (1)			1										6-8/8		62
RUB D10	L	A01J1	1-01	*	H	D02					2		P	HAND WIRE	63
RUB D10	L	A04J1	1-02	*		D02					1			TO HERE	63
RUB D10	L	C04P2	1-03	*		D01									63
RUB D10			1										12-8/8		63
RUB D10 (1)	H	D01R2	1-01	*	H	D01					1		P	HAND WIRE	64
RUB D10 (1)	H	D03R2	1-02	*	H	D01					2		P	HAND WIRE	64
RUB D10 (1)	H	D04R2	1-03	*	H	D01							P	H TO WHERE	64
RUB D10 (1)			1										6-8/8		64
RUB D11	L	A01K2	1-01	*	H	D02					2		P	HAND WIRE	65
RUB D11	L	A04K2	1-02	*		D02					1		3-7	TO HERE	65
RUB D11	L	C04N1	1-03	*		D01									65
RUB D11			1										12-1/8		65
RUB D11 (1)	H	D01S2	1-01	*	H	D01					1		P	HAND WIRE	66
RUB D11 (1)	H	D03S2	1-02	*	H	D01					2		P	HAND WIRE	66
RUB D11 (1)	H	D04S2	1-03	*	H	D01							P	H TO WHERE	66
RUB D11 (1)			1										6-8/8		66
RUB D12	L	A01K1	1-01	*	H	D02					2		P	HAND WIRE	67
RUB D12	L	A04K1	1-02	*		D02					1		4-5	TO HERE	67
RUB D12	L	D04A1	1-03	*		D01									67
RUB D12			1										13-5/8		67
RUB D12 (1)	H	D01T2	1-01	*	H	D01					1		P	HAND WIRE	68
RUB D12 (1)	H	D03T2	1-02	*	H	D01					2		P	HAND WIRE	68
RUB D12 (1)	H	D04T2	1-03	*	H	D01							P	H TO WHERE	68
RUB D12 (1)			1										6-8/8		68
RUB D13	L	A01L2	1-01	*	H	D02					2		P	HAND WIRE	69
RUB D13	L	A04L2	1-02	*		D02					1		4-2	TO HERE	69
RUB D13	L	C04V1	1-03	*		D01									69
RUB D13			1										12-7/8		69
RUB D13 (1)	H	D01U2	1-01	*	H	D01					1		P	HAND WIRE	70
RUB D13 (1)	H	D03U2	1-02	*	H	D01					2		P	HAND WIRE	70
RUB D13 (1)	H	D04U2	1-03	*	H	D01							P	H TO WHERE	70
RUB D13 (1)			1										6-8/8		70

RUN NAME	A/P	PIN NAME	ORDER PIN	BAY - ORDER	Q	DRAW	RV	PG	Y	X	Z	REMARKS	LENGTH	EXCEPTIONS	RUN NUMBER
BUS D14	L	A01L1		1-01 *	H	D02					2		P	HAND WIRE	71
BUS D14	L	A04L1		1-02 *		D02					1			TO HERE	71
BUS D14	L	C04B2		1-03 *		D01									71
BUS D14				1									12-0/0		71
BUS D14 (1)	H	D01V2		1-01 *	H	D01					1		P	HAND WIRE	72
BUS D14 (1)	H	D03V2		1-02 *	H	D01					2		P	HAND WIRE	72
BUS D14 (1)	H	D04V2		1-03 *	H	D01							P	H TO WHERE	72
BUS D14 (1)				1									6-0/0		72
BUS D15	L	A01M2	A04M2	1-01 *	H	D02					2		P	HAND WIRE	73
BUS D15	L	A04M2		1-02 *		D02					1		4-5	TO HERE	73
BUS D15	L	D04B1		1-03 *		D01									73
BUS D15				1									13-5/0		73
BUS D15 (1)	H	D01V1		1-01 *	H	D01					1		P	HAND WIRE	74
BUS D15 (1)	H	D03V1		1-02 *	H	D01					2		P	HAND WIRE	74
BUS D15 (1)	H	D04V1		1-03 *	H	D01							P	H TO WHERE	74
BUS D15 (1)				1									6-0/0		74
BUS D16	L	A01M1	A04M1	1-01 *	H	D02					2		P	HAND WIRE	75
BUS D16	L	A04M1		1-02 *		D02					1			TO HERE	75
BUS D16	L	C03C1		1-03 *											75
BUS D16				1									10-4/0		75
BUS D17	L	A01N2	A04N2	1-01 *	H	D02					2		P	HAND WIRE	76
BUS D17	L	A04N2		1-02 *		D02					1			TO HERE	76
BUS D17	L	C03B1		1-03 *											76
BUS D17				1									10-4/0		76
BUS DC LO	L	A03B2		1-01 *		D02					1				77
BUS DC LO	L	B04F2		1-02 *							2				77
BUS DC LO	L	B01F2		1-03 *		D02					1				77
BUS DC LO	L	C01B1		1-04 *		D01									77
BUS DC LO				1									12-4/0		77
BUS INIT	L	A04A1		1-01 *	H	D02					2		P	HAND WIRE	78
BUS INIT	L	A01A1		1-02 *		D02					1			TO HERE	78
BUS INIT	L	C01C1		1-03 *											78
BUS INIT				1									11-4/0		78
BUS INTR	L	A01B1		1-01 *	H	D02					2		P	HAND WIRE	79
BUS INTR	L	A04B1		1-02 *		D02					1			TO HERE	79
BUS INTR	L	D04B1		1-03 *		D01									79
BUS INTR				1									15-6/0		79

RUN NAME	A/P	PIN NAME	ORDER PIN	BAY - ORDER	Q	DRAW	RV	PG	Y	X	Z	REMARKS	LENGTH	EXCEPTIONS	RUN NUMBER
BUS MSYN	L	B01V1		1-01 *	H	D02					2		P	HAND WIRE	80
BUS MSYN	L	B04V1		1-02 *		D02					1			TO HERE	80
BUS MSYN	L	E04T2		1-03 *		D01									80
BUS MSYN				1									13-6/0		80
BUS NPG IN	H	A01U1		1-01 *		D02					1				81
BUS NPG IN	H	E04D1		1-02 *		D01									81
BUS NPG IN				1									12-0/0		81
BUS NPG OUT	H	A04U1		1-01 *	1	D02					1		6-3		82
BUS NPG OUT	H	E04U1		1-02 *		D01									82
BUS NPG OUT				1									13-3/0		82
BUS NPR	L	A01B2		1-01 *	H	D02					2		P	HAND WIRE	83
BUS NPR	L	A04B2		1-02 *		D02					1			TO HERE	83
BUS NPR	L	E04B1		1-03 *		D01									83
BUS NPR				1									16-6/0		83
BUS SACK	L	A01P2		1-01 *	H	D02					2		P	HAND WIRE	84
BUS SACK	L	A04R2		1-02 *		D02					1			TO HERE	84
BUS SACK	L	E04C1		1-03 *		D01									84
BUS SACK				1									15-4/0		84
BUS SSYN	L	B01U1	B04U1	1-01 *	H	D02					2		P	HAND WIRE	85
BUS SSYN	L	B04U1		1-02 *		D02					1		4-5	TO HERE	85
BUS SSYN	L	E04P1		1-03 *		D01									85
BUS SSYN				1									13-5/0		85
CLK	H	C02N2		1-01 *							1				86
CLK	H	F01E1		1-02 *	H	D01					2		P	HAND WIRE	86
CLK	H	E03D2		1-03 *	H	D01							P	H TO WHERE	86
CLK				1									10-6/0		86
CLR MSR	L	F01F2		1-01 *	H	D01					1		P	HAND WIRE	87
CLR MSR	L	F02F2		1-02 *	H	D01							P	H TO WHERE	87
CLR MSR				1									2-6/0		87
COUNT SA	H	C01M1		1-01 *	H	D01					1		P	HAND WIRE	88
COUNT SA	H	C03M1		1-02 *	H	D01							P	H TO WHERE	88
COUNT SA				1									3-2/0		88
CYL OVF	L	C02R2		1-01 *	H	D01					1		P	HAND WIRE	89
CYL OVF	L	C03P2		1-02 *	H	D01							P	H TO WHERE	89
CYL OVF				1									2-6/0		89

| | | |

RUN NAME	A/P	PIN NAME	ORDER PIN	BAY - ORDER	Q	DRAW	RV	PG	Y	X	Z	REMARKS	LENGTH	EXCEPTIONS	RUN NUMBER
DR BUS RD GATE	L	B02R1		1-01 *	1	D02					1		3-5		113
DR BUS RD GATE	L	D02R1		1-02 *		D01									113
DR BUS RD GATE				1									7-7/8		113
DR BUS RESTORE	L	A02M1		1-01 *	1	D02					1		3-5		114
DR BUS RESTORE	L	C02M1		1-02 *		D01									114
DR BUS RESTORE				1									7-7/8		114
DR BUS RK05	L	B02P2		1-01 *		D02					1				115
DR BUS RK05	L	D02P2		1-02 *		D01									115
DR BUS RK05				1									7-4/8		115
DR BUS SEC CNTR 0	L	B02L1		1-01 *	1	D02					1		3-5		116
DR BUS SEC CNTR 0	L	D02L1		1-02 *		D01									116
DR BUS SEC CNTR 0				1									7-7/8		116
DR BUS SEC CNTR 1	L	A02P2		1-01 *		D02					1				117
DR BUS SEC CNTR 1	L	D02A1		1-02 *		D01									117
DR BUS SEC CNTR 1				1									9-8/8		117
DR BUS SEC CNTR 2	L	B02K2		1-01 *		D02					1				118
DR BUS SEC CNTR 2	L	D02K2		1-02 *		D01									118
DR BUS SEC CNTR 2				1									7-4/8		118
DR BUS SEC CNTR 3	L	B02J1		1-01 *	1	D02					1		3-5		119
DR BUS SEC CNTR 3	L	D02J1		1-02 *		D01									119
DR BUS SEC CNTR 3				1									7-7/8		119
DR BUS SEC PLS	L	B02N2		1-01 *		D02					1				120
DR BUS SEC PLS	L	D02N2		1-02 *		D01									120
DR BUS SEC PLS				1									7-4/8		120
DR BUS SEL DR 0	L	A02J2		1-01 *		D02					1				121
DR BUS SEL DR 0	L	C02J2		1-02 *		D01									121
DR BUS SEL DR 0				1									7-4/8		121
DR BUS SEL DR 1	L	A02K2		1-01 *		D02					1				122
DR BUS SEL DR 1	L	C02K2		1-02 *		D01									122
DR BUS SEL DR 1				1									7-4/8		122
DR BUS SEL DR 2	L	A02L2		1-01 *		D02					1				123
DR BUS SEL DR 2	L	C02L2		1-02 *		D01									123
DR BUS SEL DR 2				1									7-4/8		123
DR BUS SEL UPPER HD	L	B02N2		1-01 *		D02					1				124
DR BUS SEL UPPER HD	L	D02N2		1-02 *		D01									124
DR BUS SEL UPPER HD				1									7-4/8		124

RUN NAME	A/P	PIN NAME	ORDER PIN	BAY - ORDER	Q	DRAW	RV	PG	Y	X	Z	REMARKS	LENGTH	EXCEPTIONS	RUN NUMBER
DR BUS SIN	L	A02S2		1-01 *		D02					1				125
DR BUS SIN	L	D02C1		1-02 *											125
DR BUS SIN				1									9-8/8		125
DR BUS STPORE	L	B02H1		1-01 *	1	D02					1		3-5		126
DR BUS STROBE	L	D02H1		1-02 *		D01									126
DR BUS STROBE				1									7-7/8		126
DR BUS WT CHK	L	B02K1		1-01 *	1	D02					1		3-5		127
DR BUS WT CHK	L	D02K1		1-02 *		D01									127
DR BUS WT CHK				1									7-7/8		127
DR BUS WT DATA+CLK	L	A02F2		1-01 *		D02					1				128
DR BUS WT DATA+CLK	L	C02F2		1-02 *		D01									128
DR BUS WT DATA+CLK				1									7-4/8		128
DR BUS WT GATE	L	B02L2		1-01 *		D02					1				129
DR BUS WT GATE	L	D02L2		1-02 *		D01									129
DR BUS WT GATE				1									7-4/8		129
DR BUS WT PRCT STATUS	L	B02P1		1-01 *	1	D02					1		3-5		130
DR BUS WT PRCT STATUS	L	D02P1		1-02 *		D01									130
DR BUS WT PRCT STATUS				1									7-7/8		130
DR BUS WT PROTECT	L	B02R2		1-01 *		D02					1				131
DR BUS WT PROTECT	L	D02R2		1-02 *		D01									131
DR BUS WT PROTECT				1									7-4/8		131
DRE (1)	H	F01R1		1-01 *	H	D01					1	P		NAND WIRE	132
DRE (1)	H	F02R1		1-02 *	H	D01						P		N TO WHERE	132
DRE (1)				1									2-6/8		132
DRIVE OK	H	F01N1		1-01 *	H	D01					1	P		NAND WIRE	133
DRIVE OK	H	F02N1		1-02 *	H	D01						P		N TO WHERE	133
DRIVE OK				1									2-6/8		133
DRIVE RESET	L	F01K2		1-01 *	H	D01					1	P		NAND WIRE	134
DRIVE RESET	L	F02K2		1-02 *	H	D01						P		N TO WHERE	134
DRIVE RESET				1									2-6/8		134
DRIVE UNSAFE	H	F01B1		1-01 *	H	D01					1	P		NAND WIRE	135
DRIVE UNSAFE	H	F02B1		1-02 *	H	D01						P		N TO WHERE	135
DRIVE UNSAFE				1									2-6/8		135
DRY	H	E01L2		1-01 *	H	D01					1	P		NAND WIRE	136
DRY	H	E02L2		1-02 *	H	D01						P		N TO WHERE	136
DRY				1									2-6/8		136

RK110.F HND288.V22(22) 11/06/73 1-MAY-74 19:27 PAGE 15

RUN NAME	A/P	PIN NAME	ORDER PIN ORDER	BAY -	Q	DRAW	RV	PG	Y	X	Z	REMARKS	LENGTH	EXCEPTIONS	RUN NUMBER
END OF SYNC	L	F01R2	1-01	*	H	D01					1		P	HAND WIRE	137
END OF SYNC	L	F02R2	1-02	*	H	D01							P	H TO WHERE	137
END OF SYNC			1										2-6/8		137
EX BIT	H	F01V2	1-01	*	H	D01					1		P	HAND WIRE	138
EX BIT	H	F02V2	1-02	*	H	D01							P	H TO WHERE	138
EX BIT			1										2-6/8		138
FILE DONE	H	C01F1	1-01	*	H						1		P	HAND WIRE	139
FILE DONE	H	C03F1	1-02	*	H								P	H TO WHERE	139
FILE DONE			1										3-2/8		139
FILE EMPTY	H	B03E1	1-01	*		D02					1				140
FILE EMPTY	H	C03N2	1-02	*											140
FILE EMPTY			1										6-8/8		140
FILE FULL	H	B03N1	1-01	*		D02					1				141
FILE FULL	H	C03N2	1-02	*											141
FILE FULL			1										5-8/8		141
FIRST BEEK DONE	H	E01U2	1-01	*	H	D01					1		P	HAND WIRE	142
FIRST BEEK DONE	H	E02U2	1-02	*	H	D01							P	H TO WHERE	142
FIRST BEEK DONE			1										2-6/8		142
FMT (1)	H	C01N1	1-01	*	H	D01					2		P	HAND WIRE	143
FMT (1)	H	C02N1	1-02	*	H	D01					1		P	HAND WIRE	143
FMT (1)	H	C03N1	1-03	*	H	D01							P	H TO WHERE	143
FMT (1)			1										5-4/8		143
GATE DATA TO BUS D	L	C02A1	1-01	*	H	D01					2		P	HAND WIRE	144
GATE DATA TO BUS D	L	C03A1	1-02	*	H	D01					1		P	HAND WIRE	144
GATE DATA TO BUS D	L	C04A1	1-03	*	H	D01							P	H TO WHERE	144
GATE DATA TO BUS D			1										5-4/8		144
GEN CLR	L	E01R2	1-01	*	H	D01					2		P	HAND WIRE	145
GEN CLR	L	E02R2	1-02	*		D01					1			TO HERE	145
GEN CLR	L	C03P2	1-03	*											145
GEN CLR			1										10-6/8		145
GEN DATA	H	F01E2	1-01	*	H	D01					1		P	HAND WIRE	146
GEN DATA	H	F02E2	1-02	*	H	D01							P	H TO WHERE	146
GEN DATA			1										2-6/8		146

RK110.F HND288.V22(22) 11/06/73 1-MAY-74 19:27 PAGE 16

RUN NAME	A/P	PIN NAME	ORDER PIN ORDER	BAY -	Q	DRAW	RV	PG	Y	X	Z	REMARKS	LENGTH	EXCEPTIONS	RUN NUMBER
															147
GND 01		C01A1	C01C2	1-01	*	1									147
GND 01		C01C2		1-02	*	H	D01						P	HAND WIRE	147
GND 01		A01B2		1-03	*	H							P	HAND WIRE	147
GND 01		A01C2		1-04	*	H							P	HAND WIRE	147
GND 01		A01N1		1-05	*	H							P	HAND WIRE	147
GND 01		A01P1		1-06	*	H							P	HAND WIRE	147
GND 01		A01R1		1-07	*	H							P	HAND WIRE	147
GND 01		A01S1		1-08	*	H							P	HAND WIRE	147
GND 01		A01T1		1-09	*	H							P	HAND WIRE	147
GND 01		A01V2		1-10	*	H							P	HAND WIRE	147
GND 01		B01N2		1-11	*	H							P	HAND WIRE	147
GND 01		B01C2		1-12	*	H							P	HAND WIRE	147
GND 01		B01D1		1-13	*	H							P	HAND WIRE	147
GND 01		B01E1		1-14	*	H							P	HAND WIRE	147
GND 01		B01T1		1-15	*	H							P	HAND WIRE	147
GND 01		B01V2		1-16	*	H							P	HAND WIRE	147
GND 01		C01T1		1-17	*	H							P	HAND WIRE	147
GND 01		D01C2		1-18	*	H							P	HAND WIRE	147
GND 01		D01T1		1-19	*	H							P	HAND WIRE	147
GND 01		E01C2		1-20	*	H							P	HAND WIRE	147
GND 01		E01T1		1-21	*	H							P	HAND WIRE	147
GND 01		F01C2		1-22	*	H							P	HAND WIRE	147
GND 01		F01T1		1-23	*	H							P	H TO WHERE	147
				1									73-2/8		147
GND 02		A02B2		1-01	*	H							P	HAND WIRE	148
GND 02		A02C2		1-02	*	H							P	HAND WIRE	148
GND 02		A02N1		1-03	*	H							P	HAND WIRE	148
GND 02		A02P1		1-04	*	H							P	HAND WIRE	148
GND 02		A02R1		1-05	*	H							P	HAND WIRE	148
GND 02		A02S1		1-06	*	H							P	HAND WIRE	148
GND 02		A02T1		1-07	*	H							P	HAND WIRE	148
GND 02		A02V2		1-08	*	H							P	HAND WIRE	148
GND 02		A03U1		1-09	*	H							P	HAND WIRE	148
GND 02		B02B2		1-10	*	H							P	HAND WIRE	148
GND 02		B02C2		1-11	*	H							P	HAND WIRE	148
GND 02		B02D1		1-12	*	H							P	HAND WIRE	148
GND 02		B02E1		1-13	*	H							P	HAND WIRE	148
GND 02		B02T1		1-14	*	H							P	HAND WIRE	148
GND 02		B02V2		1-15	*	H							P	HAND WIRE	148
GND 02		C02C2		1-16	*	H							P	HAND WIRE	148
GND 02		C02T1		1-17	*	H							P	HAND WIRE	148
GND 02		D02C2		1-18	*	H							P	HAND WIRE	148
GND 02		D02T1		1-19	*	H							P	HAND WIRE	148
GND 02		E02C2		1-20	*	H							P	HAND WIRE	148
GND 02		E02T1		1-21	*	H							P	HAND WIRE	148
GND 02		F02C2		1-22	*	H							P	HAND WIRE	148
GND 02		F02T1		1-23	*	H							P	H TO WHERE	148
				1									68-2/8		148

RUN NAME	A/P	PIN NAME	ORDER PIN	BAY - ORDER	Q	DRAW	RV	PG	Y	X	Z	REMARKS	LENGTH	EXCEPTIONS	RUN NUMBER
GND 03		A03C2		1-01 *	H	D02					1		P	HAND WIRE	149
GND 03		A03D2		1-02 *	H	D02					2		P	HAND WIRE	149
GND 03		A03E2		1-03 *	H	D02					1		P	HAND WIRE	149
GND 03		A03F2		1-04 *	H	D02					2		P	HAND WIRE	149
GND 03		A03N1		1-05 *	H	D02					1		P	HAND WIRE	149
GND 03		A03P1		1-06 *	H	D02					2		P	HAND WIRE	149
GND 03		A03R1		1-07 *	H	D02					1		P	HAND WIRE	149
GND 03		A03S1		1-08 *	H	D02					2		P	HAND WIRE	149
GND 03		A03T1		1-09 *	H	D02					1		P	HAND WIRE	149
GND 03		A03U1		1-10 *	H	D02					2		P	HAND WIRE	149
GND 03		A03V1		1-11 *	H						1		P	HAND WIRE	149
GND 03		B03C2		1-12 *	H	D02					2		P	HAND WIRE	149
GND 03		B03T1		1-13 *	H	D02					1		P	HAND WIRE	149
GND 03		C03C2		1-14 *	H	D01					2		P	HAND WIRE	149
GND 03		C03T1		1-15 *	H	D01					1		P	HAND WIRE	149
GND 03		D03C2		1-16 *	H	D01					2		P	HAND WIRE	149
GND 03		D03T1		1-17 *	H	D01					1		P	HAND WIRE	149
GND 03		E03C2		1-18 *	H	D01					2		P	HAND WIRE	149
GND 03		E03T1		1-19 *	H	D01					1		P	HAND WIRE	149
GND 03		F03C2		1-20 *	H	D01					2		P	HAND WIRE	149
GND 03		F03T1		1-21 *	H	D01							P	H TO WHERE	149
GND 03				1											149
													62-4/8		
GND 04		A04B2		1-01 *	H	D02					1		P	HAND WIRE	150
GND 04		A04C2		1-02 *	H	D02					2		P	HAND WIRE	150
GND 04		A04N1		1-03 *	H	D02					1		P	HAND WIRE	150
GND 04		A04P1		1-04 *	H	D02					2		P	HAND WIRE	150
GND 04		A04R1		1-05 *	H	D02					1		P	HAND WIRE	150
GND 04		A04S1		1-06 *	H	D02					2		P	HAND WIRE	150
GND 04		A04T1		1-07 *	H	D02					1		P	HAND WIRE	150
GND 04		A04V2		1-08 *	H	D02					2		P	HAND WIRE	150
GND 04		B04B2		1-09 *	H	D02					1		P	HAND WIRE	150
GND 04		B04C2		1-10 *	H	D02					2		P	HAND WIRE	150
GND 04		B04D1		1-11 *	H	D02					1		P	HAND WIRE	150
GND 04		B04E1		1-12 *	H	D02					2		P	HAND WIRE	150
GND 04		B04T1		1-13 *	H	D02					1		P	HAND WIRE	150
GND 04		B04V2		1-14 *	H	D02					2		P	HAND WIRE	150
GND 04		C04C2		1-15 *	H	D01					1		P	HAND WIRE	150
GND 04		C04T1		1-16 *	H	D01					2		P	HAND WIRE	150
GND 04		D04C2		1-17 *	H	D01					1		P	HAND WIRE	150
GND 04		D04T1		1-18 *	H	D01					2		P	HAND WIRE	150
GND 04		E04C2		1-19 *	H	D01					1		P	HAND WIRE	150
GND 04		E04T1		1-20 *	H	D01					2		P	HAND WIRE	150
GND 04		F04C2		1-21 *	H	D01					1		P	HAND WIRE	150
GND 04		F04T1		1-22 *	H	D01							P	H TO WHERE	150
GND 04				1											150
													65-0/8		

RUN NAME	A/P	PIN NAME	ORDER PIN	BAY - ORDER	Q	DRAW	RV	PG	Y	X	Z	REMARKS	LENGTH	EXCEPTIONS	RUN NUMBER
HE (1)	H	B03E2		1-01 *		D02					1				151
HE (1)	H	F02T2		1-02 *	H	D01					2		P	HAND WIRE	151
HE (1)	H	F01T2		1-03 *	H	D01							P	H TO WHERE	151
HE (1)				1											151
													17-2/8		
HEAD + CHK SUM	H	F01P2		1-01 *	H	D01					1		P	HAND WIRE	152
HEAD + CHK SUM	H	F02P2		1-02 *	H	D01							P	H TO WHERE	152
HEAD + CHK SUM				1											152
													2-6/8		
HEAD OK (1)	L	F01U2		1-01 *	H	D01					1		P	HAND WIRE	153
HEAD OK (1)	L	F02U2		1-02 *	H	D01							P	H TO WHERE	153
HEAD OK (1)				1											153
													2-6/8		
HEADER (1)	H	C01U1		1-01 *	H	D01					1		P	HAND WIRE	154
HEADER (1)	H	C03U1		1-02 *	H	D01							P	H TO WHERE	154
HEADER (1)				1											154
													3-2/8		
IRA (8)	H	E01K2		1-01 *	H	D01					1		P	HAND WIRE	155
IRA (8)	H	E03K2		1-02 *	H	D01							P	H TO WHERE	155
IRA (8)				1											155
													3-2/8		
ID 0 (1)	H	F01E1		1-01 *	H	D01					1		P	HAND WIRE	156
ID 0 (1)	H	F02E1		1-02 *	H	D01							P	H TO WHERE	156
ID 0 (1)				1											156
													2-6/8		
ID 1 (1)	H	F01F1		1-01 *	H	D01					1		P	HAND WIRE	157
ID 1 (1)	H	F02F1		1-02 *	H	D01							P	H TO WHERE	157
ID 1 (1)				1											157
													2-6/8		
ID 2 (1)	H	F01H1		1-01 *	H	D01					1		P	HAND WIRE	158
ID 2 (1)	H	F02H1		1-02 *	H	D01							P	H TO WHERE	158
ID 2 (1)				1											158
													2-6/8		
IDE (1)	H	E01A1		1-01 *	H	D01					1		P	HAND WIRE	159
IDE (1)	H	D02V2		1-02 *	H	D01					2		P	HAND WIRE	159
IDE (1)	H	E04A1		1-03 *	H	D01							P	H TO WHERE	159
IDE (1)				1											159
													6-6/8		
ILLEGAL ADD	H	F01K1		1-01 *	H	D01					1		P	HAND WIRE	160
ILLEGAL ADD	H	F02K1		1-02 *	H	D01							P	H TO WHERE	160
ILLEGAL ADD				1											160
													2-6/8		
IN BUFF FULL (1)	H	B03J2		1-01 *		D02					1				161
IN BUFF FULL (1)	H	C03K2		1-02 *											161
IN BUFF FULL (1)				1											161
													8-0/8		

RUN NAME	A/P	PIN NAME	ORDER PIN	BAY - ORDER	Q	DRAW	RV	PG	Y	X	Z	REMARKS		LENGTH	EXCEPTIONS	RUN NUMBER
INIT	H	E01T2		1-01 *	H	D01					2		P		HAND WIRE	162
INIT	H	E02T2		1-02 *	H	D01					1		P		HAND WIRE	162
INIT	H	E03T2		1-03 *	H	D01							P		H TO WHERE	162
INIT				1										5-4/8		162
INIT	L	F01A1		1-01 *	H	D01					2		P		HAND WIRE	163
INIT	L	F02A1		1-02 *	H	D01					1		P		HAND WIRE	163
INIT	L	F03A1		1-03 *	H	D01					2		P		HAND WIRE	163
INIT	L	F04A1		1-04 *	H	D01							P		H TO WHERE	163
INIT				1										8-2/8		163
INT BUS A00 (1)	H	D01A1		1-01 *	H	D01					1		P		HAND WIRE	164
INT BUS A00 (1)	H	D03A1		1-02 *	H	D01							P		H TO WHERE	164
INT BUS A00 (1)				1										3-2/8		164
INT BUS A01 (1)	H	D01B1		1-01 *	H	D01					1		P		HAND WIRE	165
INT BUS A01 (1)	H	D03B1		1-02 *	H	D01							P		H TO WHERE	165
INT BUS A01 (1)				1										3-2/8		165
INT BUS A02 (1)	H	D01C1		1-01 *	H	D01					1		P		HAND WIRE	166
INT BUS A02 (1)	H	D03C1		1-02 *	H	D01							P		H TO WHERE	166
INT BUS A02 (1)				1										3-2/8		166
INT BUS A03 (1)	H	D01D1		1-01 *	H	D01					1		P		HAND WIRE	167
INT BUS A03 (1)	H	D03D1		1-02 *	H	D01							P		H TO WHERE	167
INT BUS A03 (1)				1										3-2/8		167
INT BUS A04 (1)	H	D01E1		1-01 *	H	D01					1		P		HAND WIRE	168
INT BUS A04 (1)	H	D03E1		1-02 *	H	D01							P		H TO WHERE	168
INT BUS A04 (1)				1										3-2/8		168
INT BUS A05 (1)	H	D01F1		1-01 *	H	D01					1		P		HAND WIRE	169
INT BUS A05 (1)	H	D03F1		1-02 *	H	D01							P		H TO WHERE	169
INT BUS A05 (1)				1										3-2/8		169
INT BUS A06 (1)	H	D01H1		1-01 *	H	D01					1		P		HAND WIRE	170
INT BUS A06 (1)	H	D03H1		1-02 *	H	D01							P		H TO WHERE	170
INT BUS A06 (1)				1										3-2/8		170
INT BUS A07 (1)	H	D01J1		1-01 *	H	D01					1		P		HAND WIRE	171
INT BUS A07 (1)	H	D03J1		1-02 *	H	D01							P		H TO WHERE	171
INT BUS A07 (1)				1										3-2/8		171
INT BUS A08 (1)	H	D01K1		1-01 *	H	D01					1		P		HAND WIRE	172
INT BUS A08 (1)	H	D03K1		1-02 *	H	D01							P		H TO WHERE	172
INT BUS A08 (1)				1										3-2/8		172

RUN NAME	A/P	PIN NAME	ORDER PIN	BAY - ORDER	Q	DRAW	RV	PG	Y	X	Z	REMARKS		LENGTH	EXCEPTIONS	RUN NUMBER
INT BUS A09 (1)	H	D01L1		1-01 *	H	D01					1		P		HAND WIRE	173
INT BUS A09 (1)	H	D03L1		1-02 *	H	D01							P		H TO WHERE	173
INT BUS A09 (1)				1										3-2/8		173
INT BUS A10 (1)	H	D01M1		1-01 *	H	D01					1		P		HAND WIRE	174
INT BUS A10 (1)	H	D03M1		1-02 *	H	D01							P		H TO WHERE	174
INT BUS A10 (1)				1										3-2/8		174
INT BUS A11 (1)	H	D01N1		1-01 *	H	D01					1		P		HAND WIRE	175
INT BUS A11 (1)	H	D03N1		1-02 *	H	D01							P		H TO WHERE	175
INT BUS A11 (1)				1										3-2/8		175
INT BUS A12 (1)	H	D01P1		1-01 *	H	D01					1		P		HAND WIRE	176
INT BUS A12 (1)	H	D03P1		1-02 *	H	D01							P		H TO WHERE	176
INT BUS A12 (1)				1										3-2/8		176
INT BUS A13 (1)	H	D01R1		1-01 *	H	D01					1		P		HAND WIRE	177
INT BUS A13 (1)	H	D03R1		1-02 *	H	D01							P		H TO WHERE	177
INT BUS A13 (1)				1										3-2/8		177
INT BUS A14 (1)	H	D01S1		1-01 *	H	D01					1		P		HAND WIRE	178
INT BUS A14 (1)	H	D03S1		1-02 *	H	D01							P		H TO WHERE	178
INT BUS A14 (1)				1										3-2/8		178
INT BUS A15 (1)	H	D01U1		1-01 *	H	D01					1		P		HAND WIRE	179
INT BUS A15 (1)	H	D03U1		1-02 *	H	D01							P		H TO WHERE	179
INT BUS A15 (1)				1										3-2/8		179
INT BUS D00 (1)	H	F03V2		1-01 *	H	D01					1		P		HAND WIRE	180
INT BUS D00 (1)	H	F04V2		1-02 *	H	D01							P		H TO WHERE	180
INT BUS D00 (1)				1										2-6/8		180
INT BUS D01 (1)	H	F03U2		1-01 *	H	D01					1		P		HAND WIRE	181
INT BUS D01 (1)	H	F04U2		1-02 *	H	D01							P		H TO WHERE	181
INT BUS D01 (1)				1										2-6/8		181
INT BUS D02 (1)	H	F03T2		1-01 *	H	D01					1		P		HAND WIRE	182
INT BUS D02 (1)	H	F04T2		1-02 *	H	D01							P		H TO WHERE	182
INT BUS D02 (1)				1										2-6/8		182
INT BUS D03 (1)	H	F03S2		1-01 *	H	D01					1		P		HAND WIRE	183
INT BUS D03 (1)	H	F04S2		1-02 *	H	D01							P		H TO WHERE	183
INT BUS D03 (1)				1										2-6/8		183
INT BUS D04 (1)	H	F03R2		1-01 *	H	D01					1		P		HAND WIRE	184
INT BUS D04 (1)	H	F04R2		1-02 *	H	D01							P		H TO WHERE	184
INT BUS D04 (1)				1										2-6/8		184

RUN NAME	A/P	PIN NAME	ORDER PIN	BAY - ORDER	Q	DRAW RV PG Y	X	Z	REMARKS	LENGTH	EXCEPTIONS	RUN NUMBER
INT BUS D05 (1)	H	F03P2		1-01 *	H	D01		1		P	HAND WIRE	185
INT BUS D05 (1)	H	F04P2		1-02 *	H	D01				P	H TO WHERE	185
INT BUS D05 (1)				1						2-6/8		185
INT BUS D06 (1)	H	F03N2		1-01 *	H	D01		1		P	HAND WIRE	186
INT BUS D06 (1)	H	F04N2		1-02 *	H	D01				P	H TO WHERE	186
INT BUS D06 (1)				1						2-6/8		186
INT BUS D07 (1)	H	F03M2		1-01 *	H	D01		1		P	HAND WIRE	187
INT BUS D07 (1)	H	F04M2		1-02 *	H	D01				P	H TO WHERE	187
INT BUS D07 (1)				1						2-6/8		187
INT BUS D08 (1)	H	F03L2		1-01 *	H	D01		1		P	HAND WIRE	188
INT BUS D08 (1)	H	F04L2		1-02 *	H	D01				P	H TO WHERE	188
INT BUS D08 (1)				1						2-6/8		188
INT BUS D09 (1)	H	F03K2		1-01 *	H	D01		1		P	HAND WIRE	189
INT BUS D09 (1)	H	F04K2		1-02 *	H	D01				P	H TO WHERE	189
INT BUS D09 (1)				1						2-6/8		189
INT BUS D10 (1)	H	F03J2		1-01 *	H	D01		1		P	HAND WIRE	190
INT BUS D10 (1)	H	F04J2		1-02 *	H	D01				P	H TO WHERE	190
INT BUS D10 (1)				1						2-6/8		190
INT BUS D11 (1)	H	F03H2		1-01 *	H	D01		1		P	HAND WIRE	191
INT BUS D11 (1)	H	F04H2		1-02 *	H	D01				P	H TO WHERE	191
INT BUS D11 (1)				1						2-6/8		191
INT BUS D12 (1)	H	F03F2		1-01 *	H	D01		1		P	HAND WIRE	192
INT BUS D12 (1)	H	F04F2		1-02 *	H	D01				P	H TO WHERE	192
INT BUS D12 (1)				1						2-6/8		192
INT BUS D13 (1)	H	F03E2		1-01 *	H	D01		1		P	HAND WIRE	193
INT BUS D13 (1)	H	F04E2		1-02 *	H	D01				P	H TO WHERE	193
INT BUS D13 (1)				1						2-6/8		193
INT BUS D14 (1)	H	F03D2		1-01 *	H	D01		1		P	HAND WIRE	194
INT BUS D14 (1)	H	F04D2		1-02 *	H	D01				P	H TO WHERE	194
INT BUS D14 (1)				1						2-6/8		194
INT BUS D15 (1)	H	F03B1		1-01 *	H	D01		1		P	HAND WIRE	195
INT BUS D15 (1)	H	F04B1		1-02 *	H	D01				P	H TO WHERE	195
INT BUS D15 (1)				1						2-6/8		195
LAST BIT	H	F01D2		1-01 *	H	D01		1		P	HAND WIRE	196
LAST BIT	H	F02D2		1-02 *	H	D01				P	H TO WHERE	196
LAST BIT				1						2-6/8		196

RUN NAME	A/P	PIN NAME	ORDER PIN	BAY - ORDER	Q	DRAW RV PG Y	X	Z	REMARKS	LENGTH	EXCEPTIONS	RUN NUMBER
LAST SECTOR	L	C02U2		1-01 *	H	D01		1		P	HAND WIRE	197
LAST SECTOR	L	C03U2		1-02 *	H	D01				P	H TO WHERE	197
LAST SECTOR				1						2-6/8		197
LAST WORD DONE	L	C01L1		1-01 *	H	D01		1		P	HAND WIRE	198
LAST WORD DONE	L	C03L1		1-02 *	H	D01				P	H TO WHERE	198
LAST WORD DONE				1						3-2/8		198
LOAD RKBA HI	L	E03V2		1-01 *	H	D01		1		P	HAND WIRE	199
LOAD RKBA HI	L	E04V2		1-02 *	H	D01				P	H TO WHERE	199
LOAD RKBA HI				1						2-6/8		199
LOAD RKBA LO	L	E03H2		1-01 *	H	D01		1		P	HAND WIRE	200
LOAD RKBA LO	L	E04H2		1-02 *	H	D01				P	H TO WHERE	200
LOAD RKBA LO				1						2-6/8		200
LOAD RKCS HI	L	E01L1		1-01 *	H	D01		1		P	HAND WIRE	201
LOAD RKCS HI	L	E04L1		1-02 *	H	D01				P	H TO WHERE	201
LOAD RKCS HI				1						3-6/8		201
LOAD RKCS LO	L	E01M1		1-01 *	H	D01		1		P	HAND WIRE	202
LOAD RKCS LO	L	E04M1		1-02 *	H	D01				P	H TO WHERE	202
LOAD RKCS LO				1						3-6/8		202
LOAD RKDA HI	L	E03E2		1-01 *	H	D01		1		P	HAND WIRE	203
LOAD RKDA HI	L	E04E2		1-02 *	H	D01				P	H TO WHERE	203
LOAD RKDA HI				1						2-6/8		203
LOAD RKDA LO	L	E03F2		1-01 *	H	D01		1		P	HAND WIRE	204
LOAD RKDA LO	L	E04F2		1-02 *	H	D01				P	H TO WHERE	204
LOAD RKDA LO				1						2-6/8		204
LOAD RKWC HI	L	E01B1		1-01 *	H	D01		1		P	HAND WIRE	205
LOAD RKWC HI	L	E04B1		1-02 *	H	D01				P	H TO WHERE	205
LOAD RKWC HI				1						3-6/8		205
LOAD RKWC LO	L	E01F1		1-01 *	H	D01		1		P	HAND WIRE	206
LOAD RKWC LO	L	E04F1		1-02 *	H	D01				P	H TO WHERE	206
LOAD RKWC LO				1						3-6/8		206
M CLK	L	A02U2		1-01 *				1				
M CLK	L	D02D2		1-02 *								207
M CLK				1						0-6/8		207
												207

RUN NAME	A/P	PIN NAME	ORDER PIN	BAY - ORDER	Q	DRAW RV PG Y	X	Z	REMARKS	LENGTH	EXCEPTIONS	RUN NUMBER
NEW FUN	L	C01R1		1-01 *	H	D01		2	P		HAND WIRE	208
NEW FUN	L	C02R1		1-02 *	H	D01		1	P		HAND WIRE	208
NEW FUN	L	C03R1		1-03 *	H	D01			P		H TO WHERE	208
NEW FUN				1						5-4/8		208
NPR EN (1)	H	C03V2		1-01 *				1				209
NPR EN (1)	H	E04M2		1-02 *								209
NPR EN (1)				1						7-0/8		209
NPR REQ	H	E03J2		1-01 *	H	D01		1	P		HAND WIRE	210
NPR REQ	H	E04J2		1-02 *	H	D01			P		H TO WHERE	210
NPR REQ				1						2-6/8		210
NXM (1)	H	E01N1		1-01 *	H	D01		1	P		HAND WIRE	211
NXM (1)	H	E04N1		1-02 *	H	D01			P		H TO WHERE	211
NXM (1)				1						3-6/8		211
OUT BUFF FULL (1)	H	B03L2		1-01 *		D02		1				212
OUT BUFF FULL (1)	H	C03L2		1-02 *								212
OUT BUFF FULL (1)				1						4-6/8		212
POLL DONE	L	F01U1		1-01 *	H	D01		1	P		HAND WIRE	213
POLL DONE	L	F02U1		1-02 *	H	D01			P		H TO WHERE	213
POLL DONE				1						2-6/8		213
PREAMBLE (1)	H	F01M2		1-01 *	H	D01		1	P		HAND WIRE	214
PREAMBLE (1)	H	F02M2		1-02 *	H	D01			P		H TO WHERE	214
PREAMBLE (1)				1						2-6/8		214
R/W/B RDY	H	E01P2		1-01 *	H	D01		1	P		HAND WIRE	215
R/W/B RDY	H	E02P2		1-02 *	H	D01			P		H TO WHERE	215
R/W/B RDY				1						2-6/8		215
RD DATA=WT DATA	H	F01M1		1-01 *	H	D01		1	P		HAND WIRE	216
RD DATA=WT DATA	H	F02M1		1-02 *	H	D01			P		H TO WHERE	216
RD DATA=WT DATA				1						2-6/8		216
RD GATE (1)	H	B03F2		1-01 *		D02		1				217
RD GATE (1)	H	D02T2		1-02 *								217
RD GATE (1)				1						9-0/8		217
RD GATE EN	H	F01J2		1-01 *	H	D01		1	P		HAND WIRE	218
RD GATE EN	H	F02J2		1-02 *	H	D01			P		H TO WHERE	218
RD GATE EN				1						2-6/8		218

RUN NAME	A/P	PIN NAME	ORDER PIN	BAY - ORDER	Q	DRAW RV PG Y	X	Z	REMARKS	LENGTH	EXCEPTIONS	RUN NUMBER
RD HEADER (1)	H	F01L1		1-01 *	H	D01		1	P		HAND WIRE	219
RD HEADER (1)	H	F02L1		1-02 *	H	D01			P		H TO WHERE	219
RD HEADER (1)				1						2-6/8		219
RD+RD CHK	H	B03D2		1-01 *		D02		1				220
RD+RD CHK	H	C03K1		1-02 *	H	D01		2	P		HAND WIRE	220
RD+RD CHK	H	C01K1		1-03 *	H	D01			P		H TO WHERE	220
RD+RD CHK				1						9-0/8		220
READ	H	E01U1		1-01 *	H	D01		1	P		HAND WIRE	221
READ	H	E03U2		1-02 *	H	D01		2	P		HAND WIRE	221
READ	H	E04U2		1-03 *	H	D01			P		H TO WHERE	221
READ				1						6-2/8		221
RK INT MASTER	H	D02U1		1-01 *	H	D01		1	P		HAND WIRE	222
RK INT MASTER	H	D04U1		1-02 *	H	D01			P		H TO WHERE	222
RK INT MASTER				1						3-2/8		222
RK INT REQ	H	E02K2		1-01 *	H	D01		1	P		HAND WIRE	223
RK INT REQ	H	E04K2		1-02 *	H	D01			P		H TO WHERE	223
RK INT REQ				1						3-2/8		223
RK NPR MASTER	H	C03J2		1-01 *	1			1		3-5		224
RK NPR MASTER	H	E04H1		1-02 *	H	D01		2	P		HAND WIRE	224
RK NPR MASTER	H	F01H1		1-03 *	H	D01			P		H TO WHERE	224
RK NPR MASTER				1						11-5/8		224
RK05	H	F01C1		1-01 *	H	D01		1	P		HAND WIRE	225
RK05	H	F02C1		1-02 *	H	D01			P		H TO WHERE	225
RK05				1						2-6/8		225
RKA 01 (1)	H	E01K1		1-01 *	H	D01		2	P		HAND WIRE	226
RKA 01 (1)	H	E04K1		1-02 *	H	D01		1	P		HAND WIRE	226
RKA 01 (1)	H	E03M2		1-03 *		D01					TO HERE	226
RKA 01 (1)				1						6-4/8		226
RKA 02 (1)	H	E01J1		1-01 *	H	D01		1	P		HAND WIRE	227
RKA 02 (1)	H	E04J1		1-02 *	H	D01		2	P		HAND WIRE	227
RKA 02 (1)	H	E03N2		1-03 *		D01					TO HERE	227
RKA 02 (1)				1						6-6/8		227
RKA 03 (1)	H	E03V1		1-01 *	H	D01		1	P		HAND WIRE	228
RKA 03 (1)	H	E04V1		1-02 *	H	D01			P		H TO WHERE	228
RKA 03 (1)				1						2-6/8		228

RK11D.F RUN NAME	A/P	PIN NAME	PIN ORDER	BAY - ORDER	Q	DRAW RV PG Y	X	Z	REMARKS	LENGTH	EXCEPTIONS	RUN NUMBER
RKBA 01	H	P03C1	1-01	*	H	D01		1			HAND WIRE	229
RKBA 01	H	P04C1	1-02	*	H	D01					H TO WHERE	229
RKBA 01			1-	*						2-6/8		229
RKBA 02	H	P03D1	1-01	*	H	D01		1			HAND WIRE	230
RKBA 02	H	P04D1	1-02	*	H	D01					H TO WHERE	230
RKBA 02			1-	*						2-6/8		230
RKBA 03	H	P03E1	1-01	*	H	D01		1			HAND WIRE	231
RKBA 03	H	P04E1	1-02	*	H	D01					H TO WHERE	231
RKBA 03			1-	*						2-6/8		231
RKBA 04	H	P03F1	1-01	*	H	D01		1			HAND WIRE	232
RKBA 04	H	P04F1	1-02	*	H	D01					H TO WHERE	232
RKBA 04			1-	*						2-6/8		232
RKBA 05	H	P03H1	1-01	*	H	D01		1			HAND WIRE	233
RKBA 05	H	P04H1	1-02	*	H	D01					H TO WHERE	233
RKBA 05			1-	*						2-6/8		233
RKBA 06	H	P03J1	1-01	*	H	D01		1			HAND WIRE	234
RKBA 06	H	P04J1	1-02	*	H	D01					H TO WHERE	234
RKBA 06			1-	*						2-6/8		234
RKBA 07	H	P03K1	1-01	*	H	D01		1			HAND WIRE	235
RKBA 07	H	P04K1	1-02	*	H	D01					H TO WHERE	235
RKBA 07			1-	*						2-6/8		235
RKBA 08	H	P03L1	1-01	*	H	D01		1			HAND WIRE	236
RKBA 08	H	P04L1	1-02	*	H	D01					H TO WHERE	236
RKBA 08			1-	*						2-6/8		236
RKBA 09	H	P03M1	1-01	*	H	D01		1			HAND WIRE	237
RKBA 09	H	P04M1	1-02	*	H	D01					H TO WHERE	237
RKBA 09			1-	*						2-6/8		237
RKBA 10	H	P03N1	1-01	*	H	D01		1			HAND WIRE	238
RKBA 10	H	P04N1	1-02	*	H	D01					H TO WHERE	238
RKBA 10			1-	*						2-6/8		238
RKBA 11	H	P03R1	1-01	*	H	D01		1			HAND WIRE	239
RKBA 11	H	P04R1	1-02	*	H	D01					H TO WHERE	239
RKBA 11			1-	*						2-6/8		239
RKBA 12	H	P03P1	1-01	*	H	D01		1			HAND WIRE	240
RKBA 12	H	P04P1	1-02	*	H	D01					H TO WHERE	240
RKBA 12			1-	*						2-6/8		240

RK11D.F RUN NAME	A/P	PIN NAME	PIN ORDER	BAY - ORDER	Q	DRAW RV PG Y	X	Z	REMARKS	LENGTH	EXCEPTIONS	RUN NUMBER
RKBA 13	H	P03S1	1-01	*	H	D01		1			HAND WIRE	241
RKBA 13	H	P04S1	1-02	*	H	D01					H TO WHERE	241
RKBA 13			1-	*						2-6/8		241
RKBA 14	H	P03U1	1-01	*	H	D01		1			HAND WIRE	242
RKBA 14	H	P04U1	1-02	*	H	D01					H TO WHERE	242
RKBA 14			1-	*						2-6/8		242
RKBA 15	H	P03V1	1-01	*	H	D01		1			HAND WIRE	243
RKBA 15	H	P04V1	1-02	*	H	D01					H TO WHERE	243
RKBA 15			1-	*						2-6/8		243
RKBA OVF	L	E01S1	1-01	*	H	D01		1			HAND WIRE	244
RKBA OVF	L	E03S2	1-02	*	H	D01					H TO WHERE	244
RKBA OVF			1-	*						3-4/8		244
RKDA 00	H	B03P2	1-01	*	H	D02		1			HAND WIRE	245
RKDA 00	H	E03A1	1-02	*	H	D01		2			H TO WHERE	245
RKDA 00	H	E02A1	1-03	*	H	D01				11-4/8		245
RKDA 01	H	B03V1	1-01	*	H	D02		1			HAND WIRE	246
RKDA 01	H	E03B1	1-02	*	H	D01		2			H TO WHERE	246
RKDA 01	H	E02B1	1-03	*	H	D01				10-6/8		246
RKDA 02	H	B03N1	1-01	*	H	D02		1			HAND WIRE	247
RKDA 02	H	E03C1	1-02	*	H	D01		2			HAND WIRE	247
RKDA 02	H	E02C1	1-03	*	H	D01		1			H TO WHERE	247
RKDA 02	H	E01C1	1-04	*	H	D01				14-4/8		247
RKDA 03	H	B03K2	1-01	*	H	D02		1			HAND WIRE	248
RKDA 03	H	E03D1	1-02	*	H	D01		2			HAND WIRE	248
RKDA 03	H	E02D1	1-03	*	H	D01		1			H TO WHERE	248
RKDA 03	H	E01D1	1-04	*	H	D01				15-6/8		248
RKDA 04	H	B03U2	1-01	*	H	D02		1			HAND WIRE	249
RKDA 04	H	E03E1	1-02	*	H	D01		2			HAND WIRE	249
RKDA 04	H	E02E1	1-03	*	H	D01		1		11-4/8		249
RKDA 05	H	B03T2	1-01	*	H	D02		1			HAND WIRE	250
RKDA 05	H	E03F1	1-02	*	H	D01		2			HAND WIRE	250
RKDA 05	H	E02F1	1-03	*	H	D01		1		11-6/8		250

RUN NAME	A/P	PIN NAME	ORDER PIN	BAY - ORDER	Q	DRAW	RV	PG	Y	X	Z	REMARKS	LENGTH	EXCEPTIONS	RUN NUMBER
RKDA 06 (1)	H	B03C1		1-01 *				D02			1				251
RKDA 06 (1)	H	E03H1		1-02 *	H			D02			2		P	HAND WIRE	251
RKDA 06 (1)	H	E02H1		1-03 *	H			D01					P	H TO WHERE	251
RKDA 06 (1)				1									13-2/0		251
RKDA 07 (1)	H	B03J1		1-01 *				D01			1				252
RKDA 07 (1)	H	E03J1		1-02 *	H			D01			2		P	HAND WIRE	252
RKDA 07 (1)	H	E02J1		1-03 *	H			D01					P	H TO WHERE	252
RKDA 07 (1)				1									12-6/0		252
RKDA 08 (1)	H	B03F1		1-01 *				D02			1				253
RKDA 08 (1)	H	E03K1		1-02 *	H			D01			2		P	HAND WIRE	253
RKDA 08 (1)	H	E02K1		1-03 *	H			D01					P	H TO WHERE	253
RKDA 08 (1)				1									13-2/0		253
RKDA 09 (1)	H	B03L1		1-01 *				D02			1				254
RKDA 09 (1)	H	E03L1		1-02 *	H			D01			2		P	HAND WIRE	254
RKDA 09 (1)	H	E02L1		1-03 *	H			D01					P	H TO WHERE	254
RKDA 09 (1)				1									12-6/0		254
RKDA 10 (1)	H	B03P1		1-01 *				D02			1				255
RKDA 10 (1)	H	E03M1		1-02 *	H			D01			2		P	HAND WIRE	255
RKDA 10 (1)	H	E02M1		1-03 *	H			D01					P	H TO WHERE	255
RKDA 10 (1)				1									12-4/0		255
RKDA 11 (1)	H	B03B2		1-01 *				D02			1				256
RKDA 11 (1)	H	E03N1		1-02 *	H			D01			2		P	HAND WIRE	256
RKDA 11 (1)	H	E02N1		1-03 *	H			D01					P	H TO WHERE	256
RKDA 11 (1)				1									12-4/0		256
RKDA 12 (1)	H	B03K1		1-01 *				D02			1				257
RKDA 12 (1)	H	E03P1		1-02 *	H			D01			2		P	HAND WIRE	257
RKDA 12 (1)	H	E02P1		1-03 *	H			D01					P	H TO WHERE	257
RKDA 12 (1)				1									13-2/0		257
RKDA 13 (1)	H	E02R1		1-01 *	H			D01			1		P	HAND WIRE	258
RKDA 13 (1)	H	E03R1		1-02 *	H			D01					P	H TO WHERE	258
RKDA 13 (1)				1									2-6/0		258
RKDA 14 (1)	H	E02S1		1-01 *	H			D01			1		P	HAND WIRE	259
RKDA 14 (1)	H	E03S1		1-02 *	H			D01					P	H TO WHERE	259
RKDA 14 (1)				1									2-6/0		259
RKDA 15 (1)	H	E02U1		1-01 *	H			D01			1		P	HAND WIRE	260
RKDA 15 (1)	H	E03U1		1-02 *	H			D01					P	H TO WHERE	260
RKDA 15 (1)				1									2-6/0		260

RUN NAME	A/P	PIN NAME	ORDER PIN	BAY - ORDER	Q	DRAW	RV	PG	Y	X	Z	REMARKS	LENGTH	EXCEPTIONS	RUN NUMBER
RKDB 00 (1)	H	C02T2		1-01 *	H			D01			1		P	HAND WIRE	261
RKDB 00 (1)	H	C03T2		1-02 *	H			D01					P	H TO WHERE	261
RKDB 00 (1)				1									2-6/0		261
RKDS 00 (1)	H	E01V1		1-01 *	H			D01			1		P	HAND WIRE	262
RKDS 00 (1)	H	E02V1		1-02 *	H			D01					P	H TO WHERE	262
RKDS 00 (1)				1									2-6/0		262
RKDS 01 (1)	H	E01D2		1-01 *	H			D01			1		P	HAND WIRE	263
RKDS 01 (1)	H	E02D2		1-02 *	H			D01					P	H TO WHERE	263
RKDS 01 (1)				1									2-6/0		263
RKDS 02 (1)	H	E01E2		1-01 *	H			D01			1		P	HAND WIRE	264
RKDS 02 (1)	H	E02E2		1-02 *	H			D01					P	H TO WHERE	264
RKDS 02 (1)				1									2-6/0		264
RKDS 03 (1)	H	E01F2		1-01 *	H			D01			1		P	HAND WIRE	265
RKDS 03 (1)	H	E02F2		1-02 *	H			D01					P	H TO WHERE	265
RKDS 03 (1)				1									2-6/0		265
SC=SA	H	E01H2		1-01 *	H			D01			1		P	HAND WIRE	266
SC=SA	H	E02H2		1-02 *	H			D01					P	H TO WHERE	266
SC=SA				1									2-6/0		266
SCH CMP (1)	H	F01S1		1-01 *	H			D01			1		P	HAND WIRE	267
SCH CMP (1)	H	F02S1		1-02 *	H			D01					P	H TO WHERE	267
SCH CMP (1)				1									2-6/0		267
SECTOR END	L	C0282		1-01 *	H			D01			1		P	HAND WIRE	268
SECTOR END	L	C0382		1-02 *	H			D01					P	H TO WHERE	268
SECTOR END				1									2-6/0		268
SECTOR PULSE	H	E01M2		1-01 *	H			D01			1		P	HAND WIRE	269
SECTOR PULSE	H	E02M2		1-02 *	H			D01					P	H TO WHERE	269
SECTOR PULSE				1									2-6/0		269
SEEK OR RESET	H	B03N2		1-01 *				D02			1				270
SEEK OR RESET	H	F02L2		1-02 *	H			D01			2		P	HAND WIRE	270
SEEK OR RESET	H	F01L2		1-03 *	H			D01					P	H TO WHERE	270
SEEK OR RESET				1									15-4/0		270
SER RD DATA (1)	H	C01V1		1-01 *	H			D01			2		P	HAND WIRE	271
SER RD DATA (1)	H	C02V1		1-02 *	H			D01			1		P	HAND WIRE	271
SER RD DATA (1)	H	C03V1		1-03 *	H			D01					P	H TO WHERE	271
SER RD DATA (1)				1									5-4/0		271

RUN NAME	A/P	PIN NAME	ORDER PIN	BAY - ORDER	Q	DRAW	RV	PG	Y	X	Z	REMARKS		LENGTH	EXCEPTIONS	RUN NUMBER
SIN	H	E01N2		1-01 *	H	D01					1		P		HAND WIRE	272
SIN	H	E02N2		1-02 *	H	D01							P		H TO WHERE	272
SIN				1										2-6/8		272
STOP NPRS	L	C01H1		1-01 *	H	D01					1		P		HAND WIRE	273
STOP NPRS	L	C03H1		1-02 *	H	D01							P		H TO WHERE	273
STOP NPRS				1										3-2/8		273
STOP POLL	L	F01N2		1-01 *	H	D01					1		P		HAND WIRE	274
STOP POLL	L	F02N2		1-02 *	H	D01							P		H TO WHERE	274
STOP POLL				1										2-6/8		274
WC OVF (1)	H	B03S1		1-01 *		D02					1					275
WC OVF (1)	H	C03J1		1-02 *	H	D01					2		P		HAND WIRE	275
WC OVF (1)	H	C01J1		1-03 *	H	D01							P		H TO WHERE	275
WC OVF (1)				1										7-2/8		275
WRITE	H	F01H2		1-01 *	H	D01					1		P		HAND WIRE	276
WRITE	H	F02H2		1-02 *	H	D01							P		H TO WHERE	276
WRITE				1										2-6/8		276
WT GATE (1)	H	B03M2		1-01 *		D02					1					277
WT GATE (1)	H	F02P1		1-02 *	H	D01					2		P		HAND WIRE	277
WT GATE (1)	H	F01P1		1-03 *	H	D01							P		H TO WHERE	277
WT GATE (1)				1										16-2/8		277
WT LOCK	H	F01S2		1-01 *	H	D01					1		P		HAND WIRE	278
WT LOCK	H	F02S2		1-02 *	H	D01							P		H TO WHERE	278
WT LOCK				1										2-6/8		278
WT PRCT STATUS	H	E01J2		1-01 *	H	D01					1		P		HAND WIRE	279
WT PRCT STATUS	H	E02J2		1-02 *	H	D01							P		H TO WHERE	279
WT PRCT STATUS				1										2-6/8		279
WT+WT CHK	H	B03H2		1-01 *		D02					1					280
WT+WT CHK	H	C03P1		1-02 *	H	D01					2		P		HAND WIRE	280
WT+WT CHK	H	C02P1		1-03 *	H	D01					1		P		HAND WIRE	280
WT+WT CHK	H	C01P1		1-04 *	H	D01							P		H TO WHERE	280
WT+WT CHK				1										11-2/8		280
XFER FUNCTION	H	E01V2		1-01 *	H	D01					1		P		HAND WIRE	281
XFER FUNCTION	H	E02V2		1-02 *	H	D01							P		H TO WHERE	281
XFER FUNCTION				1										2-6/8		281